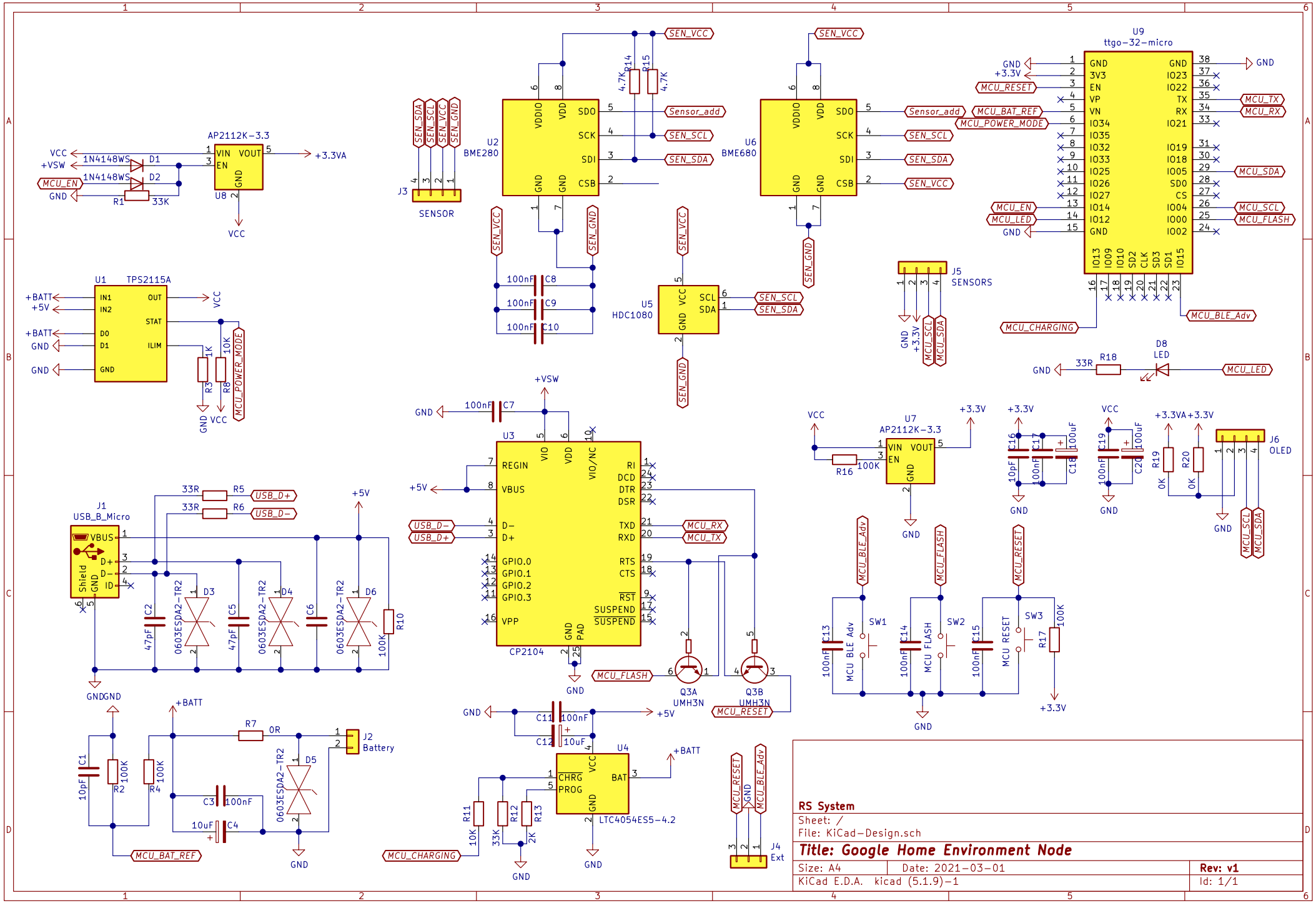
AP2112K-3.3
U8
VIN
EN
VOUT
GND
+3.3VA
VCC
+VSW
1N4148WS
D1
D2
MCU_EN
R1
33K
U1
TPS2115A
IN1
IN2
DO
D1
OUT
STAT
ILIM
+BATT
+5V
R3
1K
R8
10K
MCU_POWER_MODE
U2
BME280
VDDIO
VDD
SDO
SCK
SDI
CSB
SEN_VCC
SEN_SCL
SEN_SDA
SEN_GND
Sensor_add
R14
4.7K
R15
C8
C9
C10
100nF
J3
SENSOR
U6
BME680
U5
HDC1080
SCL
SDA
J5
SENSORS
MCU_SCL
MCU_SDA
U9
ttgo-32-micro
3V3
VP
VN
TX
RX
CS
MCU_RESET
MCU_BAT_REF
MCU_LED
MCU_CHARGING
MCU_BLE_Adv
MCU_FLASH
MCU_TX
MCU_RX
D8
LED
R18
33R
U3
CP2104
REGIN
VBUS
VIO
VIO/NC
RI
DCD
DTR
DSR
TXD
RXD
RTS
CTS
RST
SUSPEND
VPP
GND PAD
USB_D-
USB_D+
Q3A
UMH3N
Q3B
U7
AP2112K-3.3
R16
100K
C16
C17
C18
C19
C20
100uF
R19
R20
0K
J6
OLED
J1
USB_B_Micro
VBUS
Shield
R5
R6
33R
C2
47pF
C5
C6
D3
D4
D6
0603ESDA2-TR2
R10
SW1
SW2
SW3
MCU BLE Adv
MCU FLASH
MCU RESET
C13
C14
C15
R17
J2
Battery
R7
0R
C1
10pF
R2
R4
C3
C4
10uF
D5
C11
C12
U4
LTC4054ES5-4.2
CHRG
PROG
BAT
R11
R12
R13
10K
33K
2K
J4
Ext
RS System
Sheet: /
File: KiCad-Design.sch
Title: Google Home Environment Node
Size: A4
Date: 2021-03-01
Rev: v1
KiCad E.D.A. kicad (5.1.9)-1
Id: 1/1