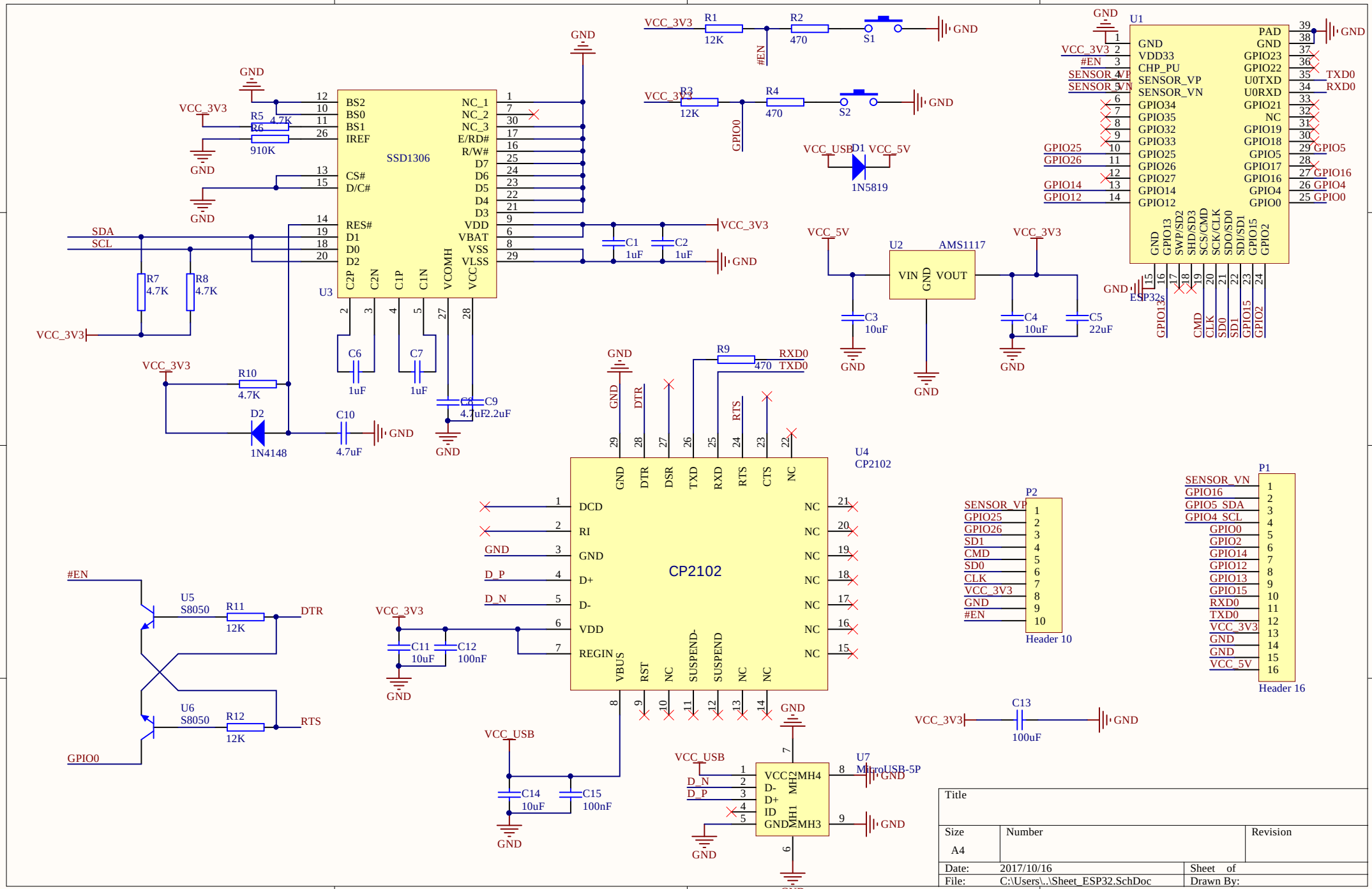
U1
ESP32s
U2
AMS1117
VIN
VOUT
GND
U3
SSD1306
BS2
BS0
BS1
IREF
CS#
D/C#
RES#
D1
D0
D2
C2P
C2N
C1P
C1N
VCOMH
VCC
NC_1
NC_2
NC_3
E/RD#
R/W#
D7
D6
D5
D4
D3
VDD
VBAT
VSS
VLSS
U4
CP2102
DCD
RI
D+
D-
REGIN
VBUS
RST
SUSPEND-
SUSPEND
DSR
TXD
RXD
RTS
CTS
U5
S8050
U6
S8050
U7
MicroUSB-5P
VCC_USB
VCC_3V3
VCC_5V
SDA
SCL
#EN
DTR
RTS
GPIO0
D_P
D_N
RXD0
TXD0
P1
Header 16
P2
Header 10
R1
12K
R2
470
R3
12K
R4
470
S1
S2
D1
1N5819
D2
1N4148
R5
4.7K
R6
910K
R7
4.7K
R8
4.7K
R9
470
R10
4.7K
R11
12K
R12
12K
R13
100uF
C1
1uF
C2
1uF
C3
10uF
C4
10uF
C5
22uF
C6
1uF
C7
1uF
C8
4.7uF
C9
2.2uF
C10
4.7uF
C11
10uF
C12
100nF
C14
10uF
C15
100nF
Title
Size
A4
Number
Revision
Date:
2017/10/16
Sheet of
File:
C:\Users\..\Sheet_ESP32.SchDoc
Drawn By: