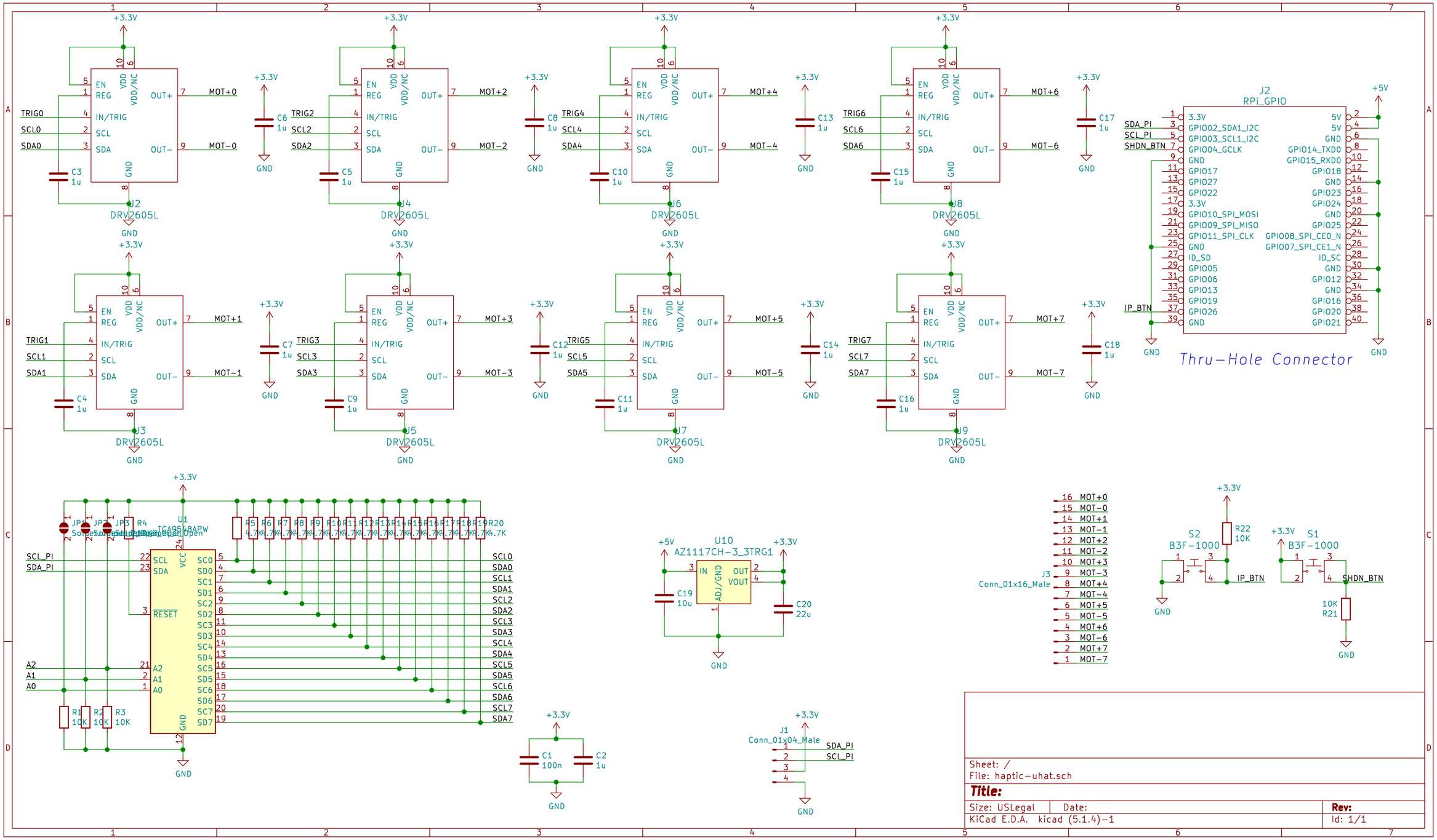
J2 DRV2605L
J4 DRV2605L
J6 DRV2605L
J8 DRV2605L
J3 DRV2605L
J5 DRV2605L
J7 DRV2605L
J9 DRV2605L
J2 RPi_GPIO
Thru-Hole Connector
U1 TCA9548APW
U10 AZ1117CH-3_3TRG1
J3 Conn_01x16_Male
S2 B3F-1000
S1 B3F-1000
J1 Conn_01x04_Male
Sheet: /
File: haptic-uhat.sch
Title:
Size: USLegal
Date:
Rev:
KiCad E.D.A. kicad (5.1.4)-1
Id: 1/1