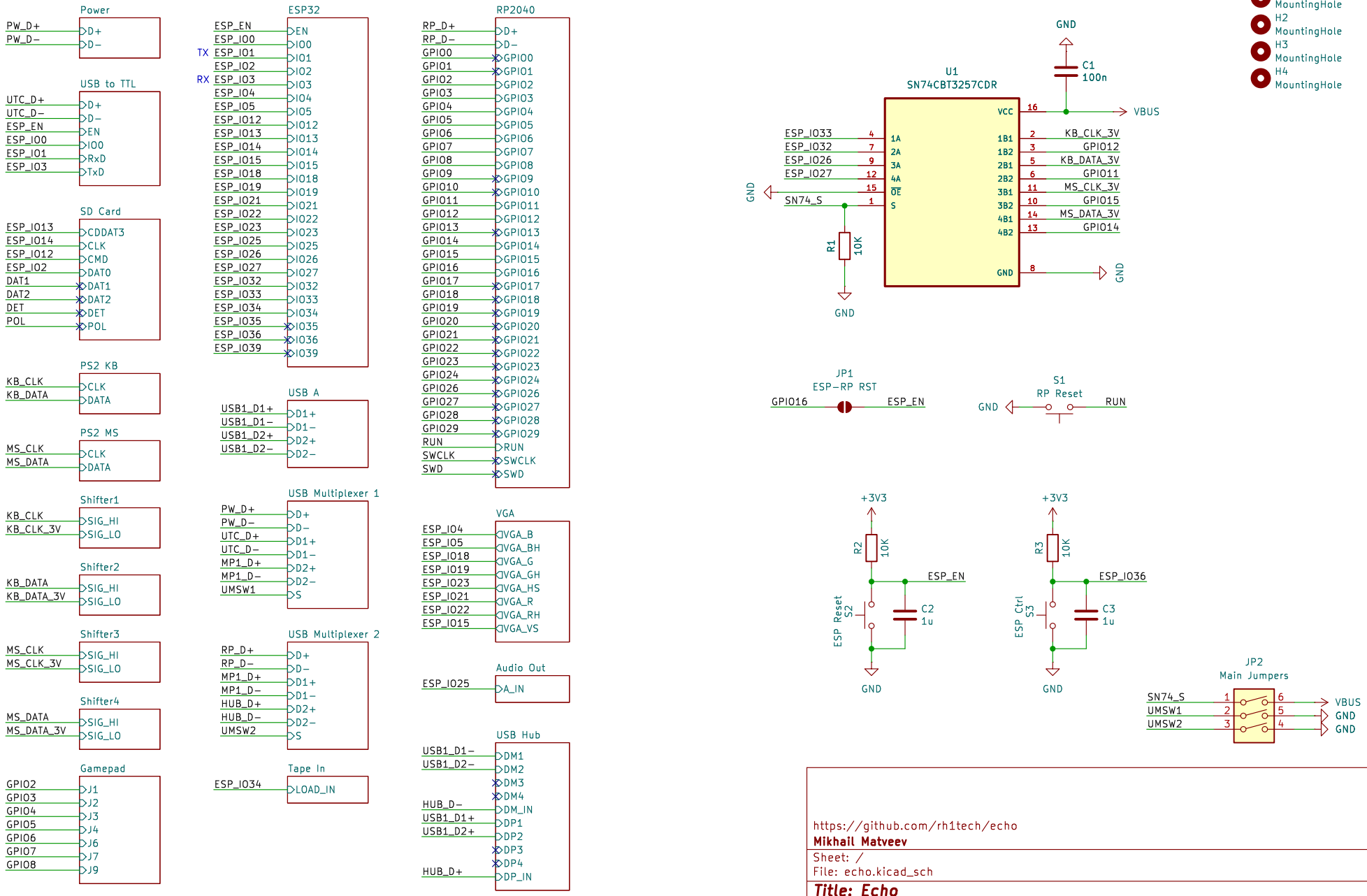

https://github.com/rh1tech/echo

Mikhail Matveev

Sheet: /

File: echo.kicad_sch

Title: Echo

Size: A4	Date: 2025−06−23	**Rev: 1.02**
KiCad E.D.A. 9.0.0		Id: 1/20

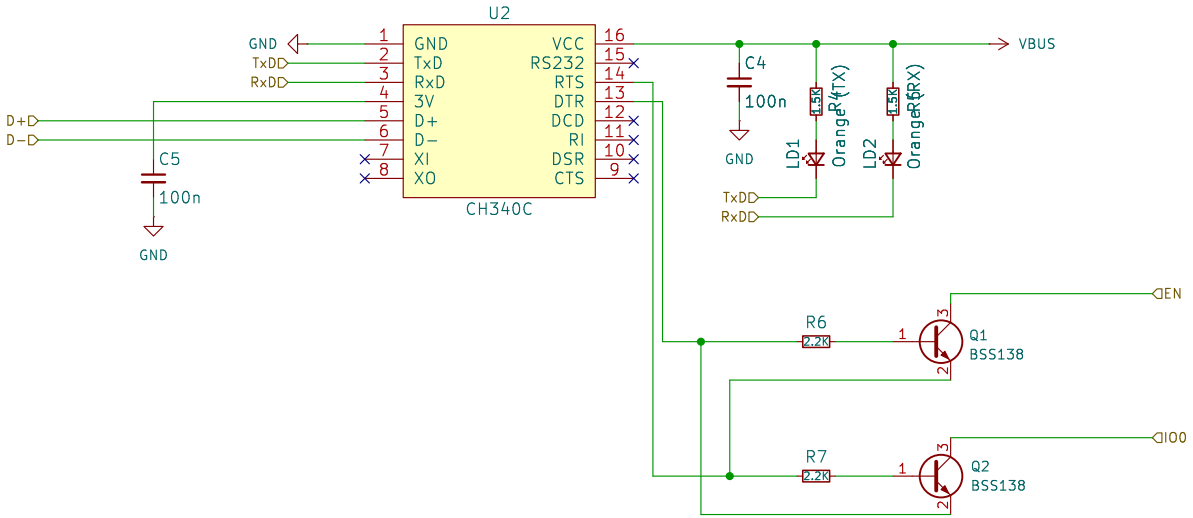

https://github.com/rh1tech/echo

Mikhail Matveev

Sheet: /USB to TTL/

File: usb2ttl.kicad_sch

Title: Echo

Size: A4	Date: 2025-06-23	**Rev: 1.02**
KiCad E.D.A. 9.0.0		Id: 2/20

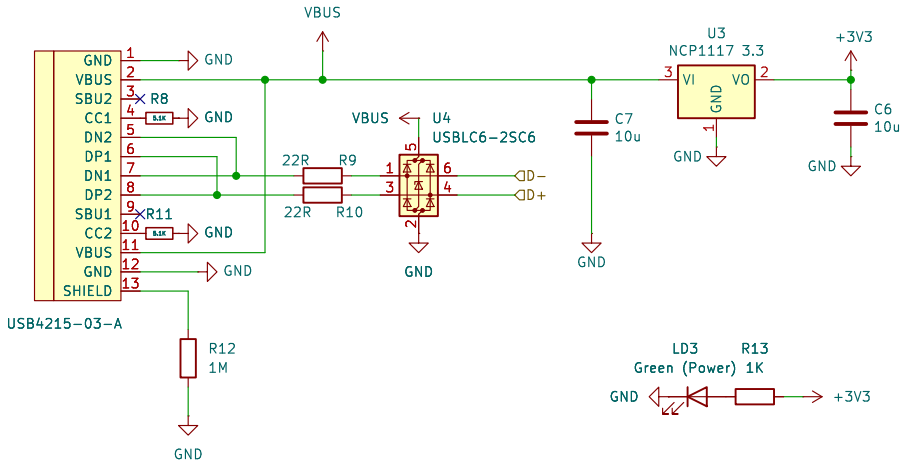

https://github.com/rh1tech/echo

Mikhail Matveev

Sheet: /Power/

File: power.kicad_sch

Title: Echo

Size: A4	Date: 2025-06-23	**Rev: 1.02**
KiCad E.D.A. 9.0.0		Id: 3/20

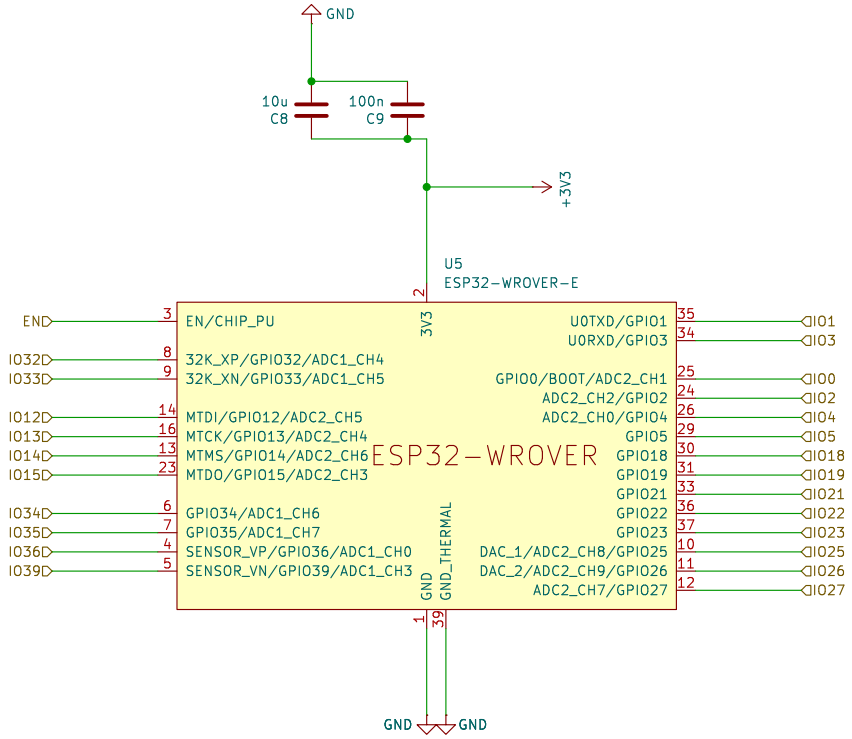

https://github.com/rh1tech/echo

Mikhail Matveev

Sheet: /ESP32/

File: esp32.kicad_sch

Title: Echo

Size: A4	Date: 2025-06-23	**Rev: 1.02**
KiCad E.D.A. 9.0.0		Id: 4/20

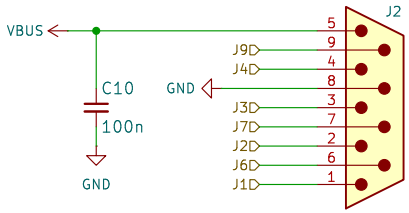

https://github.com/rh1tech/echo

Mikhail Matveev

Sheet: /Gamepad/
File: gamepad.kicad_sch

Title: Echo

Size: A4	Date: 2025-06-23	**Rev: 1.02**
KiCad E.D.A. 9.0.0		Id: 5/20

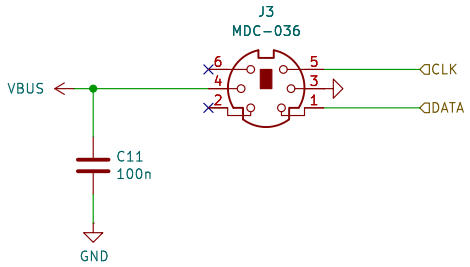

https://github.com/rh1tech/echo

Mikhail Matveev

Sheet: /PS2 KB/
File: ps2.kicad_sch

Title: Echo

Size: A4	Date: 2025-06-23	**Rev: 1.02**
KiCad E.D.A. 9.0.0		Id: 6/20

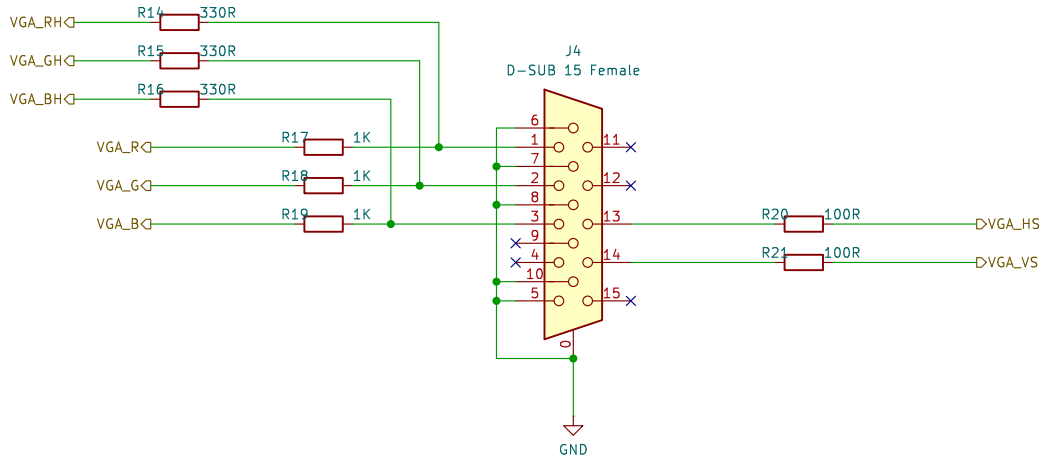

https://github.com/rh1tech/echo

Mikhail Matveev

Sheet: /VGA/

File: vga.kicad_sch

Title: Echo

Size: A4	Date: 2025-06-23	**Rev: 1.02**
KiCad E.D.A. 9.0.0		Id: 7/20

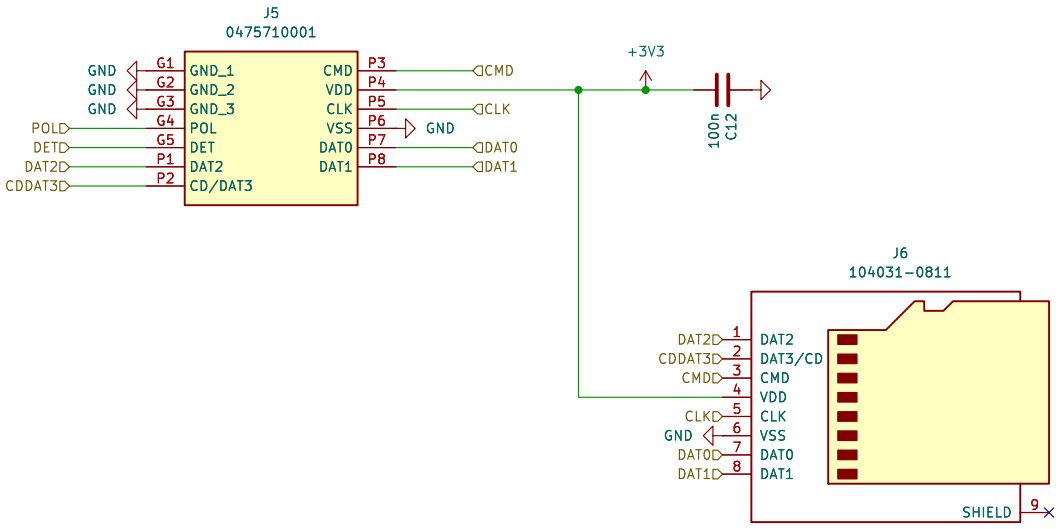

https://github.com/rh1tech/echo

Mikhail Matveev

Sheet: /SD Card/
File: sd.kicad_sch

Title: Echo

Size: A4	Date: 2025-06-23	**Rev: 1.02**
KiCad E.D.A. 9.0.0		Id: 8/20

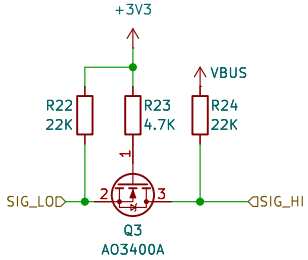

https://github.com/rh1tech/echo

Mikhail Matveev

Sheet: /Shifter2/
File: level_shifter.kicad_sch

Title: Echo

Size: A4	Date: 2025-06-23	**Rev: 1.02**
KiCad E.D.A. 9.0.0		Id: 9/20

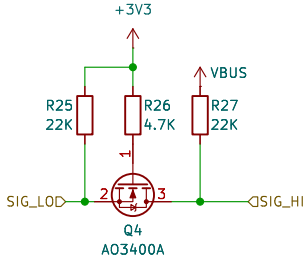

https://github.com/rh1tech/echo

Mikhail Matveev

Sheet: /Shifter3/
File: level_shifter.kicad_sch

Title: Echo

Size: A4	Date: 2025-06-23	**Rev: 1.02**
KiCad E.D.A. 9.0.0		Id: 10/20

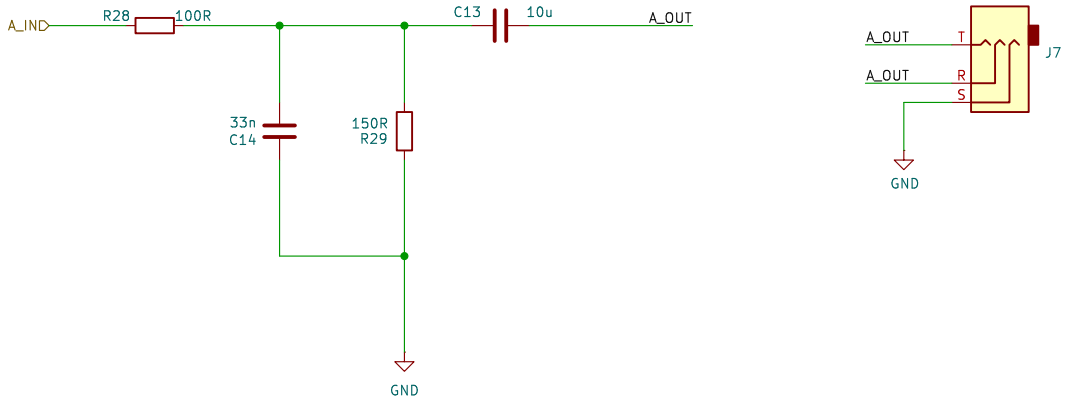

https://github.com/rh1tech/echo

Mikhail Matveev

Sheet: /Audio Out/
File: audio.kicad_sch

Title: Echo

Size: A4	Date: 2025-06-23	**Rev: 1.02**
KiCad E.D.A. 9.0.0		Id: 11/20

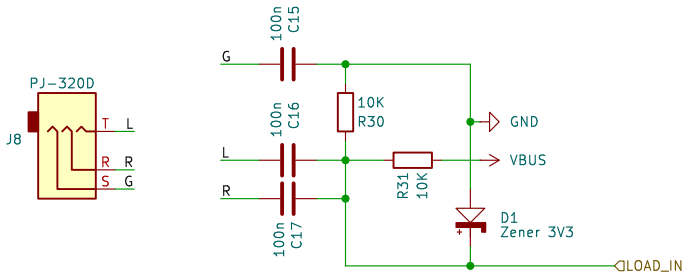

https://github.com/rh1tech/echo

Mikhail Matveev

Sheet: /Tape In/
File: tape.kicad_sch

Title: Echo

Size: A4	Date: 2025-06-23	**Rev: 1.02**
KiCad E.D.A. 9.0.0		Id: 12/20

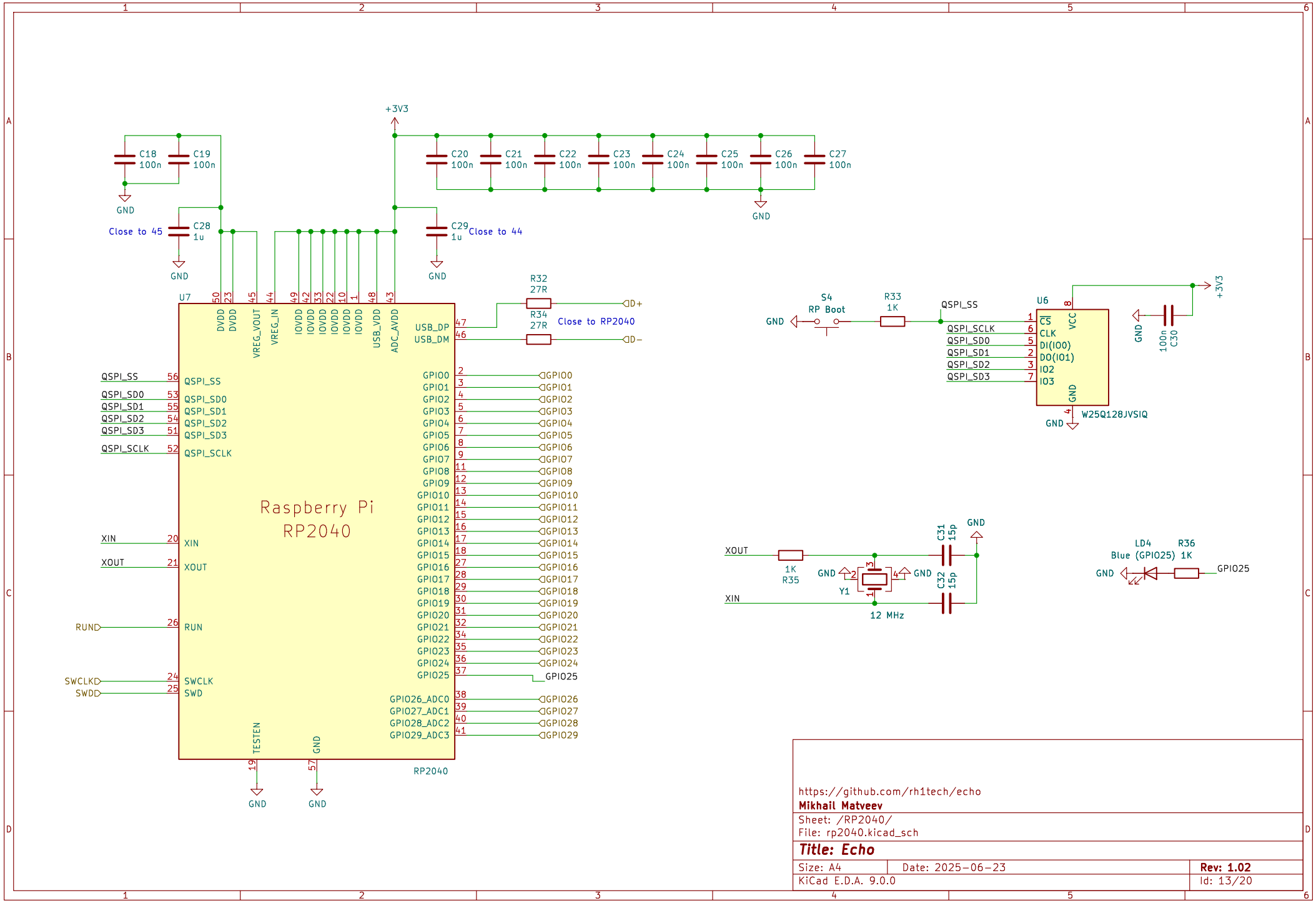

https://github.com/rh1tech/echo

Mikhail Matveev

Sheet: /RP2040/

File: rp2040.kicad_sch

Title: Echo

Size: A4	Date: 2025-06-23	**Rev: 1.02**
KiCad E.D.A. 9.0.0		Id: 13/20

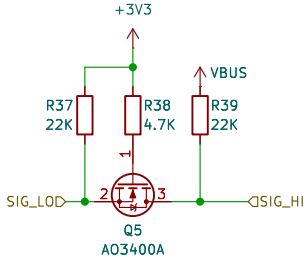

https://github.com/rh1tech/echo

Mikhail Matveev

Sheet: /Shifter4/
File: level_shifter.kicad_sch

Title: Echo

Size: A4	Date: 2025-06-23	**Rev: 1.02**
KiCad E.D.A. 9.0.0		Id: 14/20

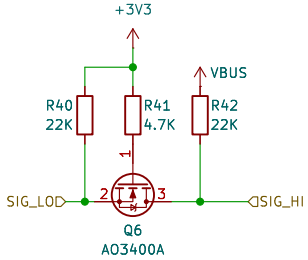

https://github.com/rh1tech/echo

Mikhail Matveev

Sheet: /Shifter1/
File: level_shifter.kicad_sch

Title: Echo

Size: A4	Date: 2025-06-23	**Rev: 1.02**
KiCad E.D.A. 9.0.0		Id: 15/20

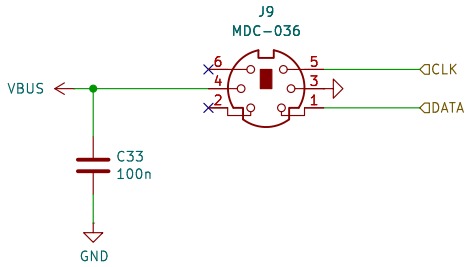

https://github.com/rh1tech/echo

Mikhail Matveev

Sheet: /PS2 MS/
File: ps2.kicad_sch

Title: Echo

Size: A4	Date: 2025-06-23	**Rev: 1.02**
KiCad E.D.A. 9.0.0		Id: 16/20

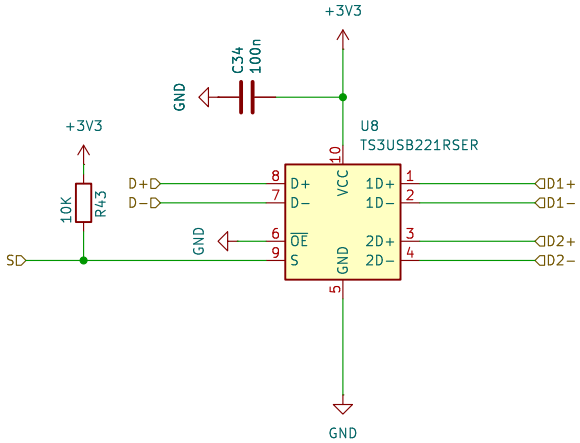

https://github.com/rh1tech/echo

Mikhail Matveev

Sheet: /USB Multiplexer 2/

File: usb_multiplexer.kicad_sch

Title: Echo

Size: A4	Date: 2025-06-23	**Rev: 1.02**
KiCad E.D.A. 9.0.0		Id: 17/20

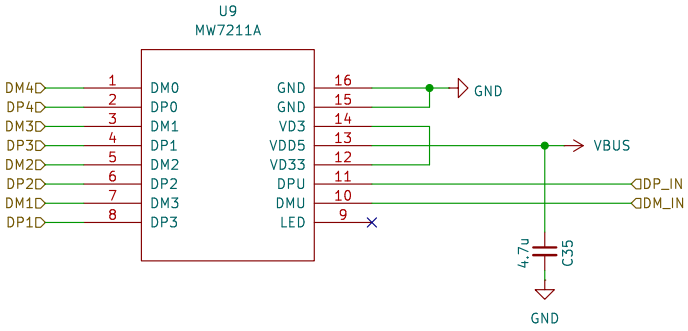

https://github.com/rh1tech/echo

Mikhail Matveev

Sheet: /USB Hub/
File: usb_hub.kicad_sch

Title: Echo

Size: A4	Date: 2025-06-23	**Rev: 1.02**
KiCad E.D.A. 9.0.0		Id: 18/20

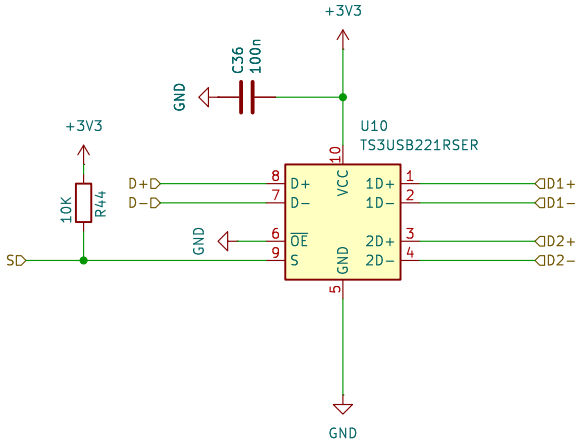

https://github.com/rh1tech/echo

Mikhail Matveev

Sheet: /USB Multiplexer 1/

File: usb_multiplexer.kicad_sch

Title: Echo

Size: A4	Date: 2025-06-23	**Rev: 1.02**
KiCad E.D.A. 9.0.0		Id: 19/20

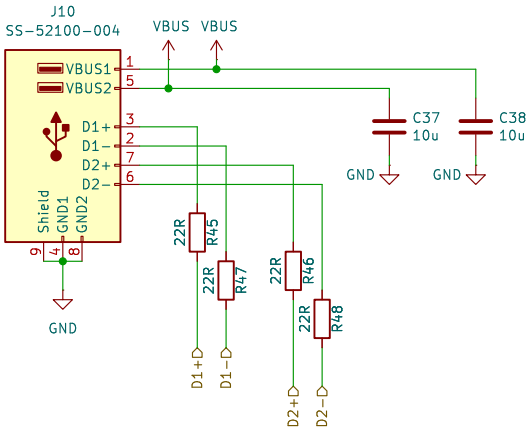

https://github.com/rh1tech/echo

Mikhail Matveev

Sheet: /USB A/

File: usbstack.kicad_sch

Title: Echo

Size: A4	Date: 2025-06-23	**Rev: 1.02**
KiCad E.D.A. 9.0.0		Id: 20/20