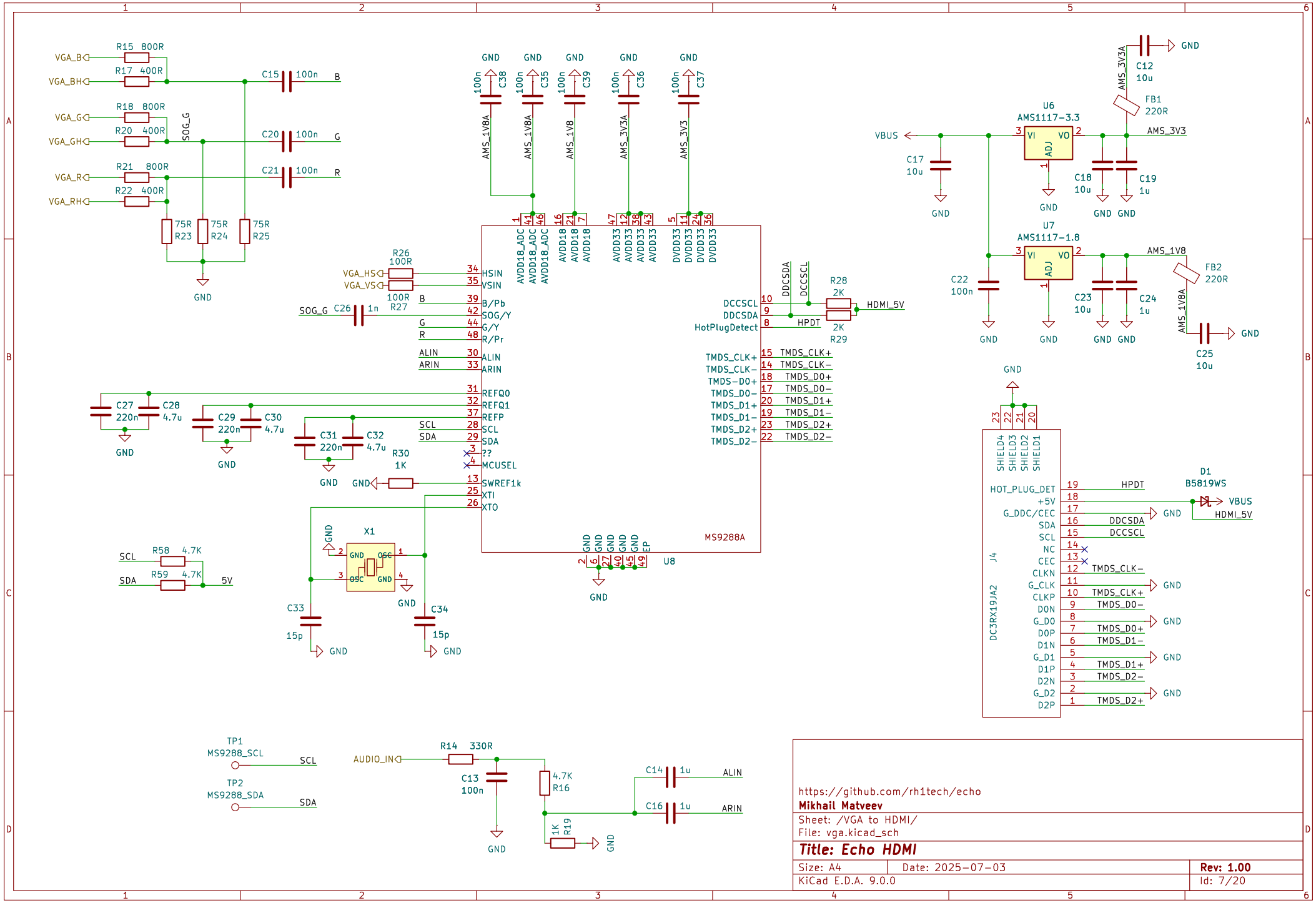

https://github.com/rh1tech/echo

Mikhail Matveev

Sheet: /VGA to HDMI/

File: vga.kicad_sch

Title: Echo HDMI

Size: A4	Date: 2025-07-03	**Rev: 1.00**
KiCad E.D.A. 9.0.0		Id: 7/20