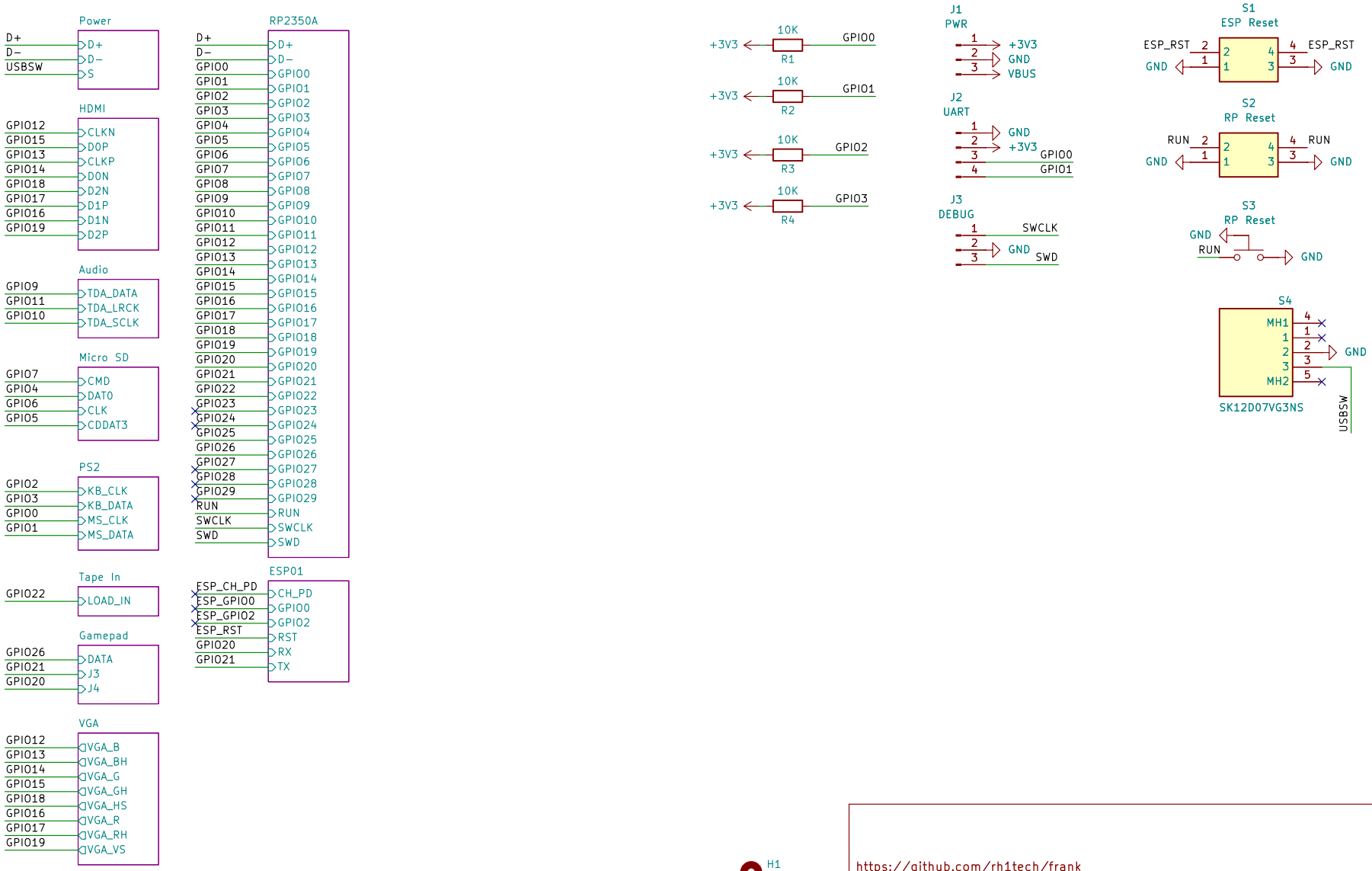

https://github.com/rh1tech/frank

Mikhail Matveev

Sheet: /

File: minifrank_m2p2.kicad_sch

Title: MiniFRANK M2P2

Size: A4	Date: 2026-04-19	**Rev: 1.05**
KiCad E.D.A. 10.0.1		Id: 1/13

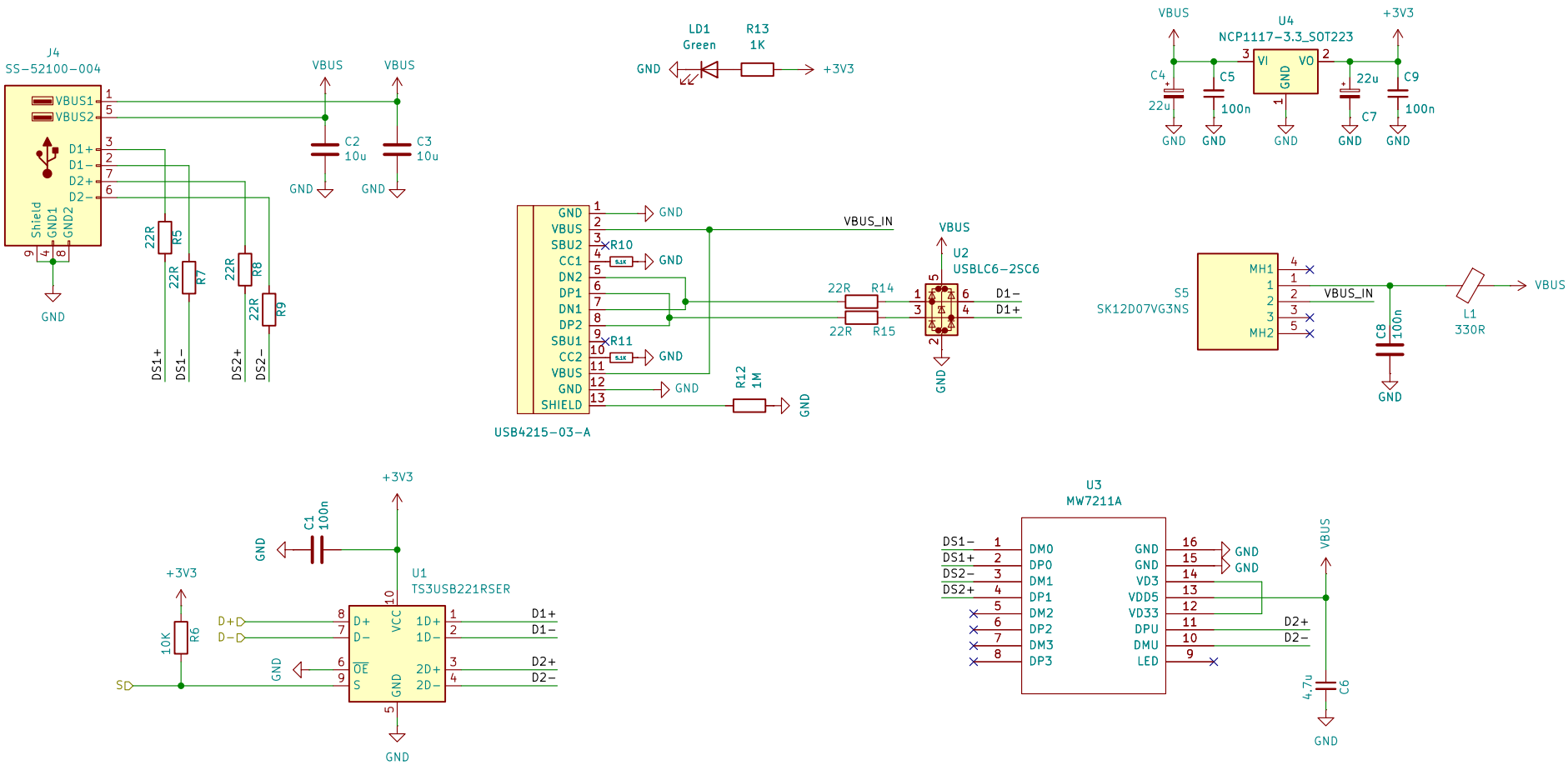

https://github.com/rh1tech/frank

Mikhail Matveev

Sheet: /Power/

File: power.kicad_sch

Title: MiniFRANK M2P2

Size: A4	Date: 2026-04-19	**Rev: 1.05**
KiCad E.D.A. 10.0.1		Id: 3/13

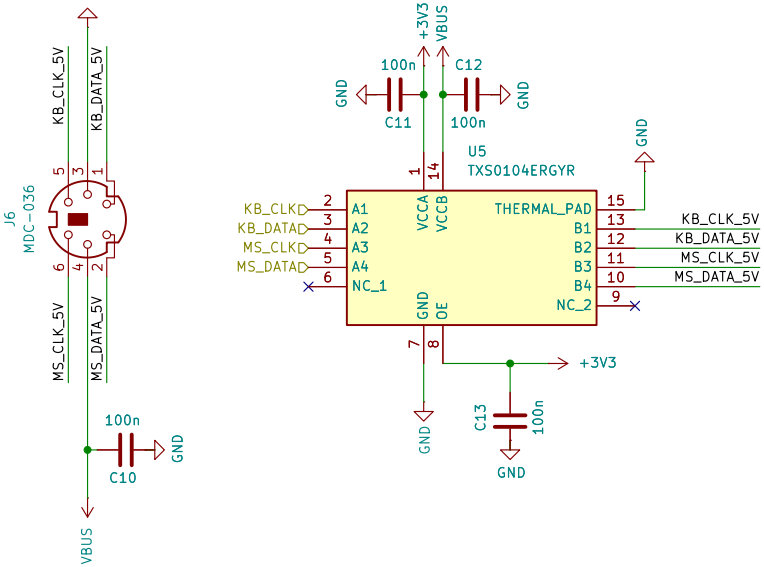

https://github.com/rh1tech/frank

Mikhail Matveev

Sheet: /PS2/

File: ps2.kicad_sch

Title: MiniFRANK M2P2

Size: A4	Date: 2026-04-19	**Rev: 1.05**
KiCad E.D.A. 10.0.1		Id: 9/13

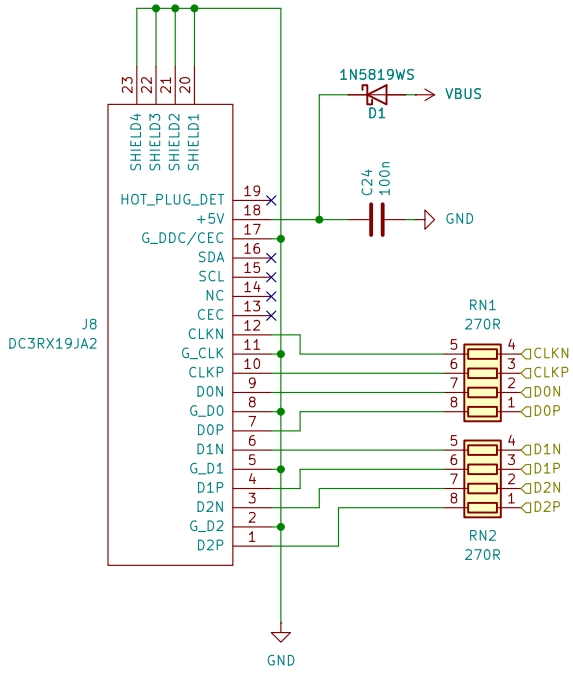

https://github.com/rh1tech/frank

Mikhail Matveev

Sheet: /HDMI/

File: hdmi.kicad_sch

Title: MiniFRANK M2P2

Size: A4	Date: 2026-04-19	**Rev: 1.05**
KiCad E.D.A. 10.0.1		Id: 10/13

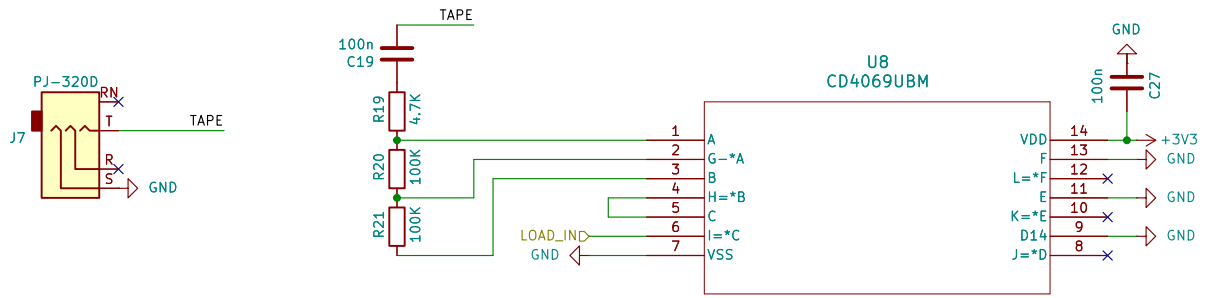

https://github.com/rh1tech/frank

Mikhail Matveev

Sheet: /Tape In/
File: tape.kicad_sch

Title: MiniFRANK M2P2

Size: A4	Date: 2026-04-19	**Rev: 1.05**
KiCad E.D.A. 10.0.1		Id: 10/13

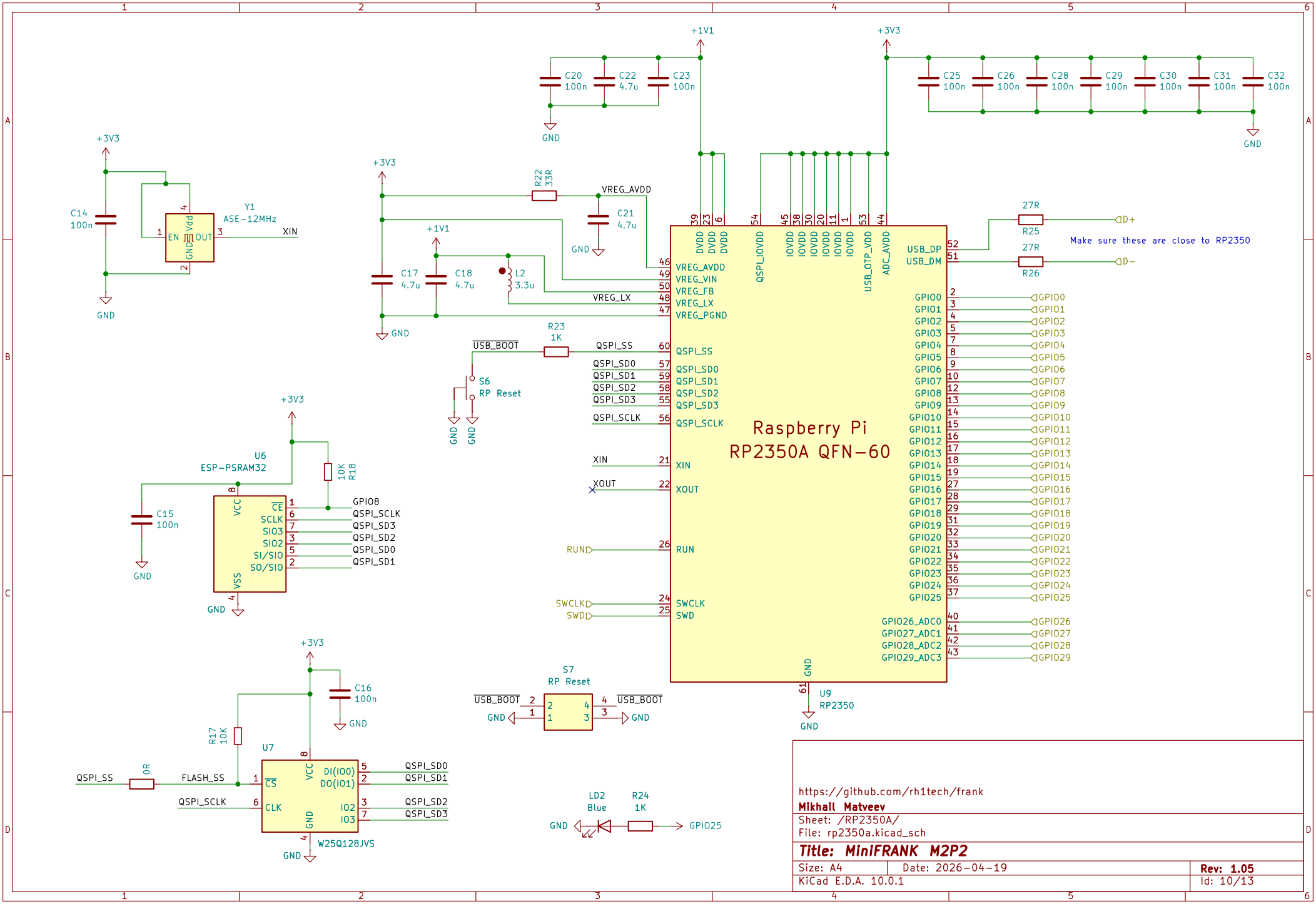
Raspberry Pi
RP2350A QFN-60
U9
RP2350
Y1
ASE-12MHz
U6
ESP-PSRAM32
U7
W25Q128JVS
S6
RP Reset
S7
RP Reset
LD2
Blue
Make sure these are close to RP2350
+1V1
+3V3
GND
XIN
XOUT
RUN
SWCLK
SWD
USB_BOOT
QSPI_SS
QSPI_SD0
QSPI_SD1
QSPI_SD2
QSPI_SD3
QSPI_SCLK
VREG_AVDD
VREG_VIN
VREG_FB
VREG_LX
VREG_PGND
QSPI_IOVDD
USB_OTP_VDD
ADC_AVDD
USB_DP
USB_DM
D+
D-
GPIO26_ADC0
GPIO27_ADC1
GPIO28_ADC2
GPIO29_ADC3
FLASH_SS
https://github.com/rh1tech/frank
Mikhail Matveev
Sheet: /RP2350A/
File: rp2350a.kicad_sch
Title: MiniFRANK M2P2
Size: A4
Date: 2026-04-19
Rev: 1.05
KiCad E.D.A. 10.0.1
Id: 10/13

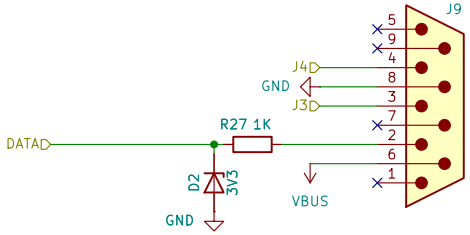

https://github.com/rh1tech/frank

Mikhail Matveev

Sheet: /Gamepad/

File: gamepad.kicad_sch

Title: MiniFRANK M2P2

Size: A4	Date: 2026-04-19	**Rev: 1.05**
KiCad E.D.A. 10.0.1		Id: 11/13

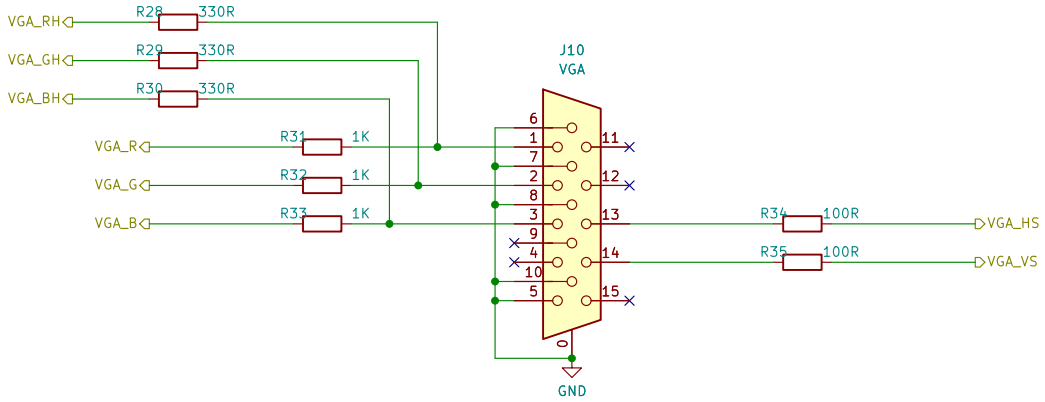

https://github.com/rh1tech/frank

Mikhail Matveev

Sheet: /VGA/

File: vga.kicad_sch

Title: MiniFRANK M2P2

Size: A4	Date: 2026-04-19	**Rev: 1.05**
KiCad E.D.A. 10.0.1		Id: 12/13

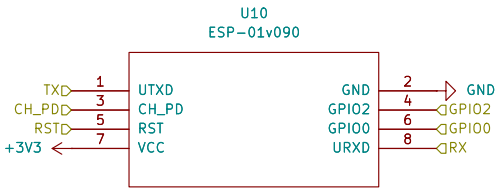

https://github.com/rh1tech/frank

Mikhail Matveev

Sheet: /ESP01/

File: esp01s.kicad_sch

Title: MiniFRANK M2P2

Size: A4	Date: 2026-04-19	**Rev: 1.05**
KiCad E.D.A. 10.0.1		Id: 13/13

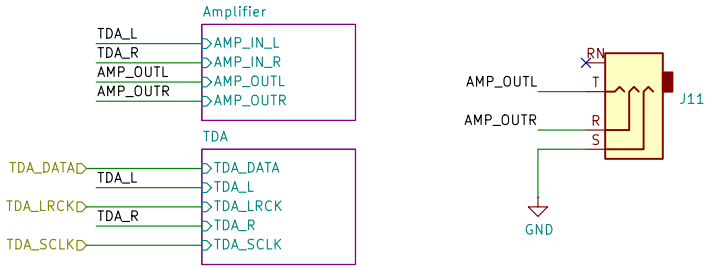

https://github.com/rh1tech/frank

Mikhail Matveev

Sheet: /Audio/

File: audio.kicad_sch

Title: MiniFRANK M2P2

Size: A4	Date: 2026-04-19	**Rev: 1.05**
KiCad E.D.A. 10.0.1		Id: 41/13

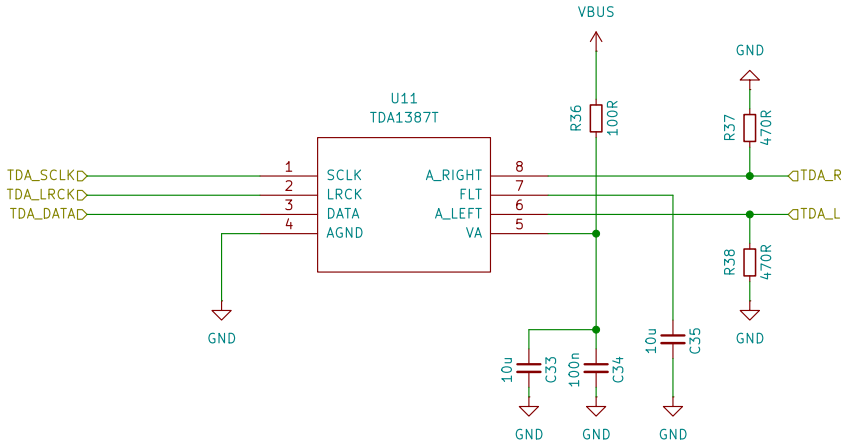

https://github.com/rh1tech/frank

Mikhail Matveev

Sheet: /Audio/TDA/

File: tda.kicad_sch

Title: MiniFRANK M2P2

Size: A4	Date: 2026-04-19	**Rev: 1.05**
KiCad E.D.A. 10.0.1		Id: 43/13

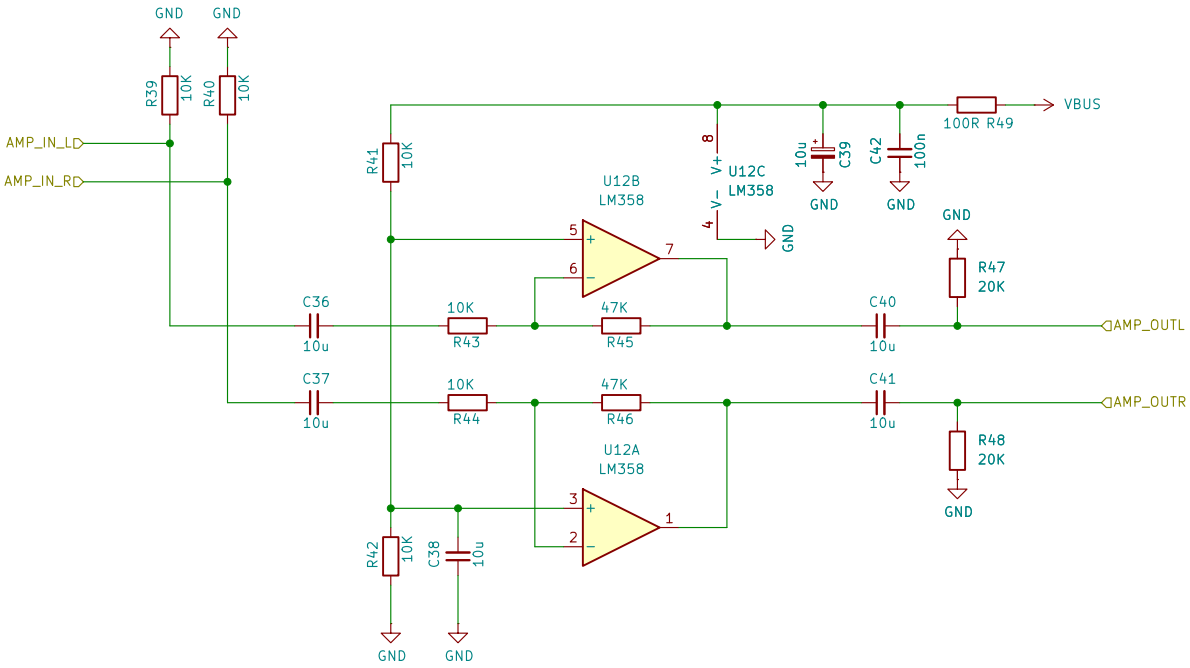

https://github.com/rh1tech/frank

Mikhail Matveev

Sheet: /Audio/Amplifier/

File: amp.kicad_sch

Title: MiniFRANK M2P2

Size: A4	Date: 2026-04-19	**Rev: 1.05**
KiCad E.D.A. 10.0.1		Id: 44/13

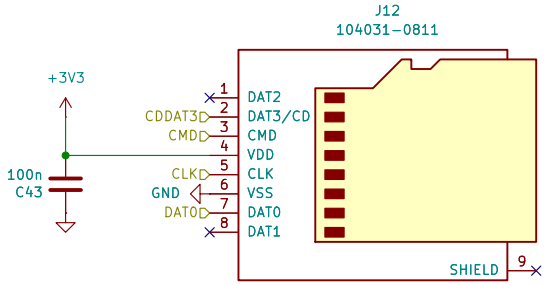

https://github.com/rh1tech/frank

Mikhail Matveev

Sheet: /Micro SD/
File: sd.kicad_sch

Title: MiniFRANK M2P2

Size: A4	Date: 2026-04-19	**Rev: 1.05**
KiCad E.D.A. 10.0.1		Id: 49/13