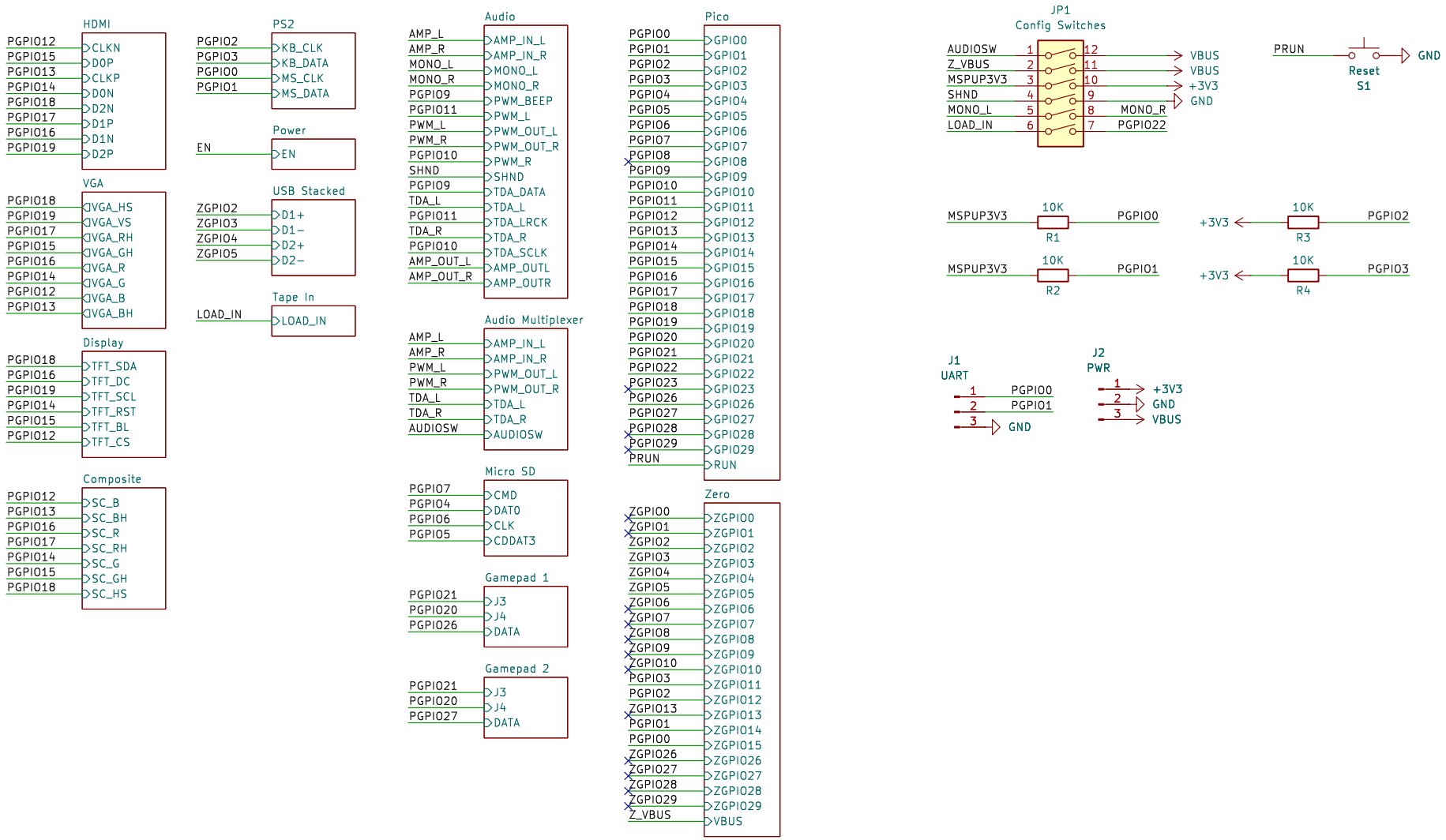

https://github.com/xtremespb/frank

Mikhail Matveev

Sheet: /

File: frank_m2.kicad_sch

Title: FRANK M2

Size: A4	Date: 2026-03-24	**Rev: 2.06**
KiCad E.D.A. 9.0.7		Id: 1/19

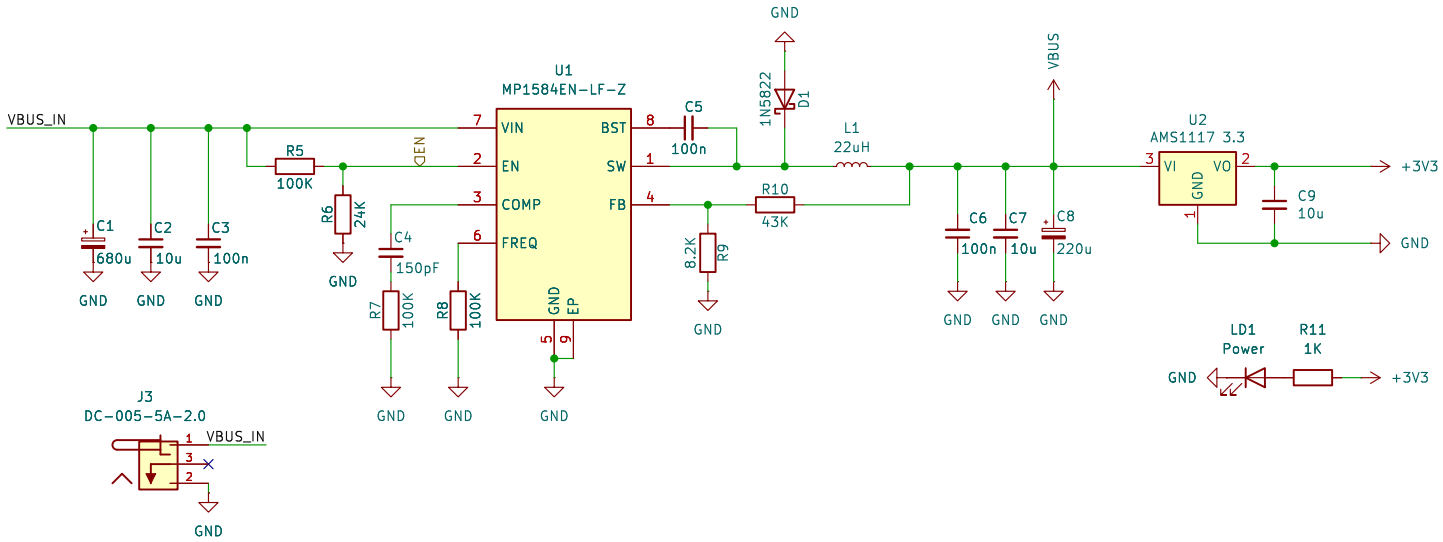

https://github.com/xtremespb/frank

Mikhail Matveev

Sheet: /Power/

File: power.kicad_sch

Title: FRANK M2

Size: A4	Date: 2026-03-24	**Rev: 2.06**
KiCad E.D.A. 9.0.7		Id: 3/19

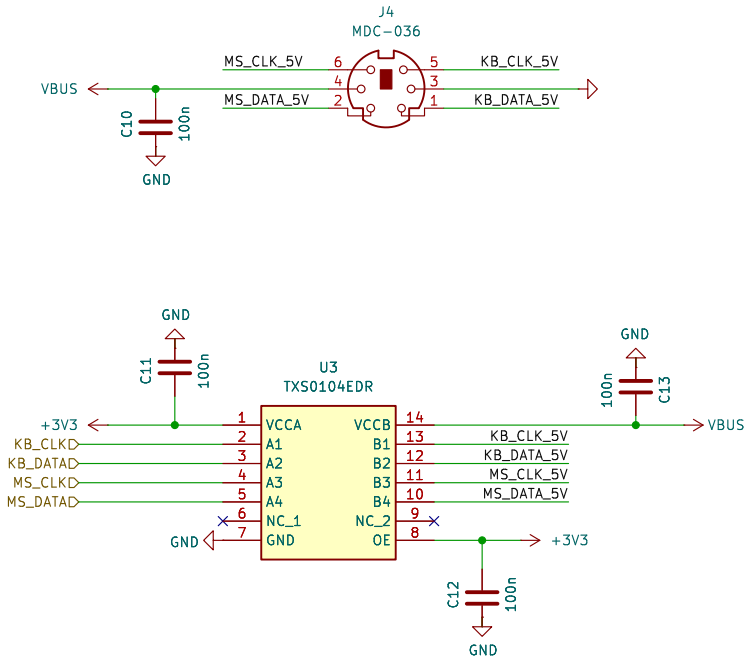

https://github.com/xtremespb/frank

Mikhail Matveev

Sheet: /PS2/

File: ps2.kicad_sch

Title: FRANK M2

Size: A4	Date: 2026-03-24	**Rev: 2.06**
KiCad E.D.A. 9.0.7		Id: 4/19

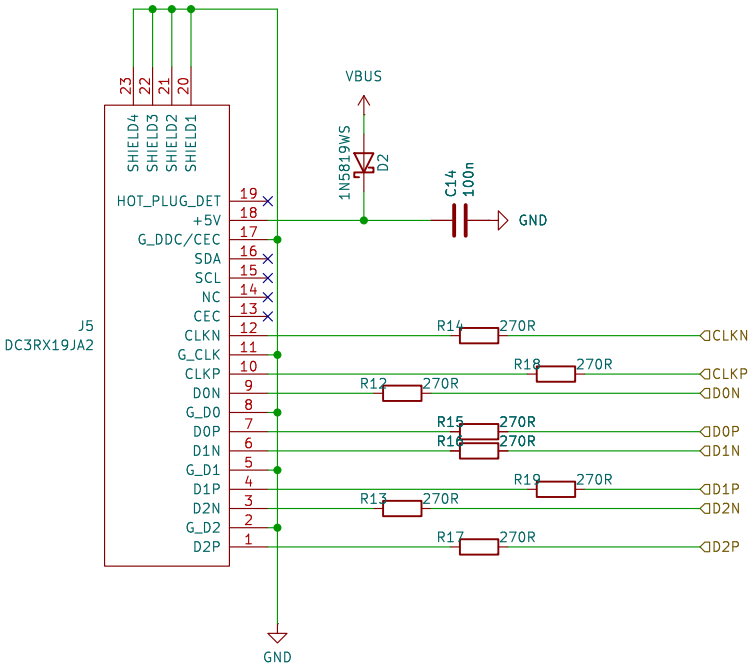

https://github.com/xtremespb/frank

Mikhail Matveev

Sheet: /HDMI/

File: hdmi.kicad_sch

Title: FRANK M2

Size: A4	Date: 2026-03-24	**Rev: 2.06**
KiCad E.D.A. 9.0.7		Id: 10/19

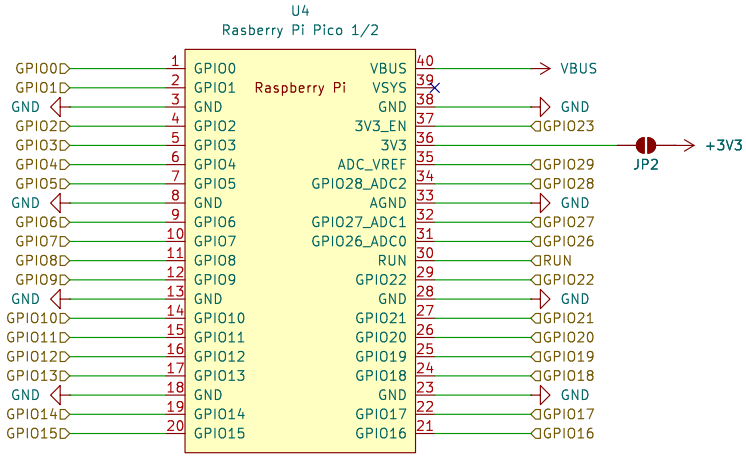

https://github.com/xtremespb/frank

Mikhail Matveev

Sheet: /Pico/

File: pico.kicad_sch

Title: FRANK M2

Size: A4	Date: 2026-03-24	**Rev: 2.06**
KiCad E.D.A. 9.0.7		Id: 12/19

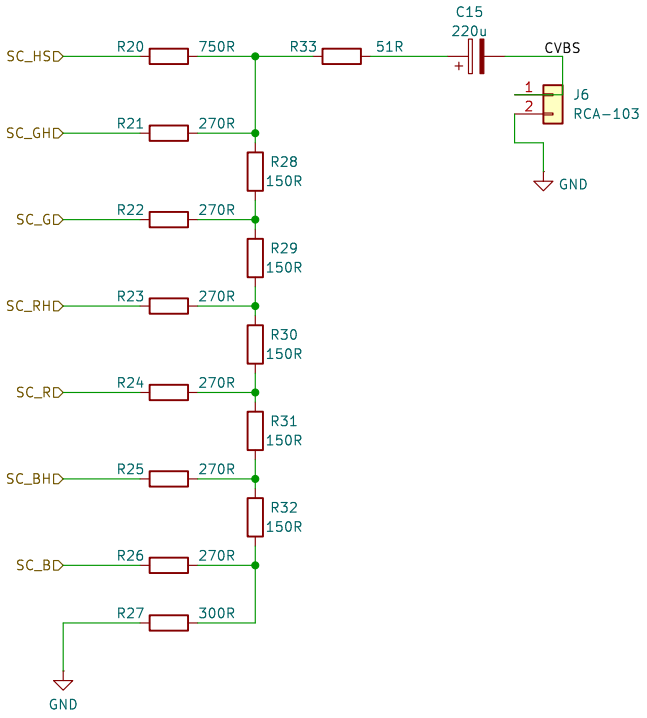

https://github.com/xtremespb/frank

Mikhail Matveev

Sheet: /Composite/

File: composite.kicad_sch

Title: FRANK M2

Size: A4	Date: 2026-03-24	**Rev: 2.06**
KiCad E.D.A. 9.0.7		Id: 35/19

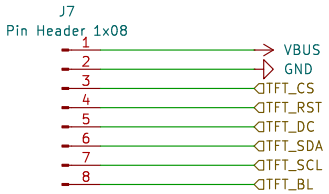

https://github.com/xtremespb/frank

Mikhail Matveev

Sheet: /Display/
File: display.kicad_sch

Title: FRANK M2

Size: A4	Date: 2026-03-24	**Rev: 2.06**
KiCad E.D.A. 9.0.7		Id: 36/19

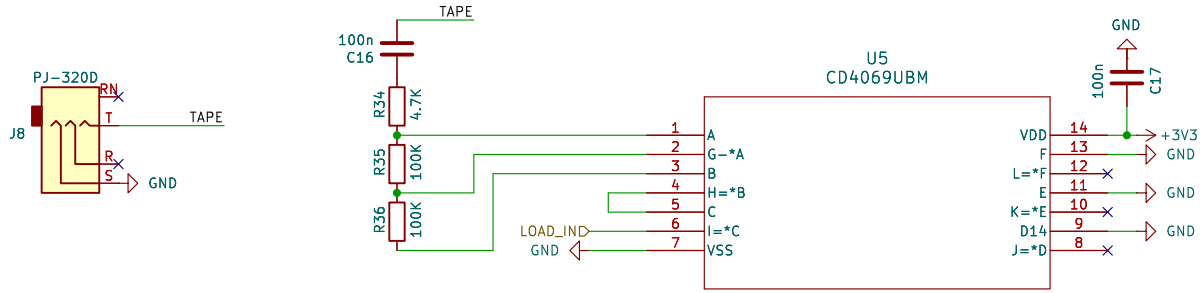

https://github.com/xtremespb/frank

Mikhail Matveev

Sheet: /Tape In/

File: tape.kicad_sch

Title: FRANK M2

Size: A4	Date: 2026-03-24	**Rev: 2.06**
KiCad E.D.A. 9.0.7		Id: 39/19

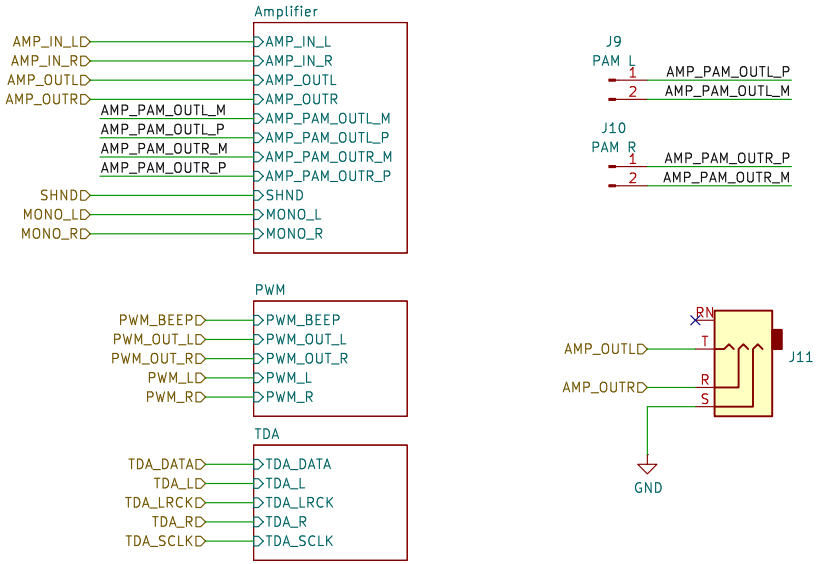

https://github.com/xtremespb/frank

Mikhail Matveev

Sheet: /Audio/

File: audio.kicad_sch

Title: FRANK M2

Size: A4	Date: 2026-03-24	**Rev: 2.06**
KiCad E.D.A. 9.0.7		Id: 41/19

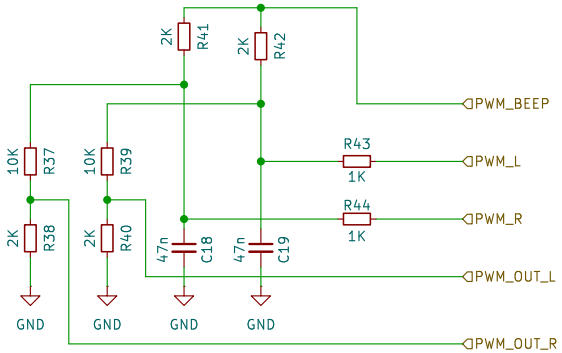

https://github.com/xtremespb/frank

Mikhail Matveev

Sheet: /Audio/PWM/

File: pwm.kicad_sch

Title: FRANK M2

Size: A4	Date: 2026-03-24	**Rev: 2.06**
KiCad E.D.A. 9.0.7		Id: 42/19

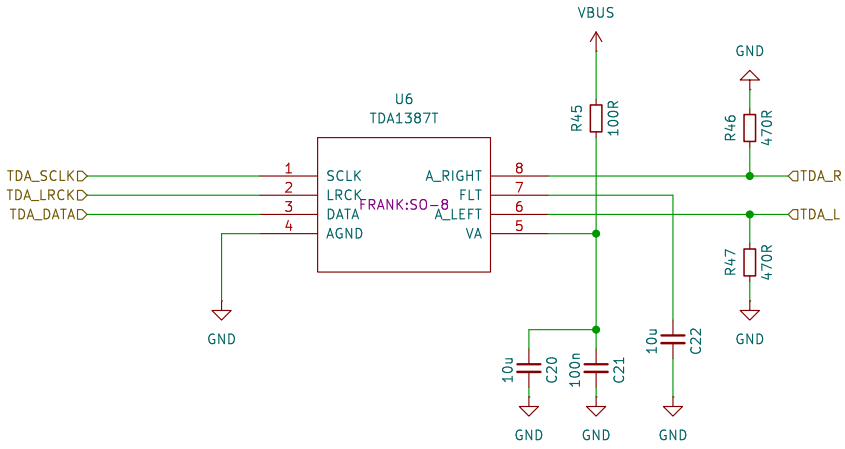

https://github.com/xtremespb/frank

Mikhail Matveev

Sheet: /Audio/TDA/

File: tda.kicad_sch

Title: FRANK M2

Size: A4	Date: 2026-03-24	**Rev: 2.06**
KiCad E.D.A. 9.0.7		Id: 43/19

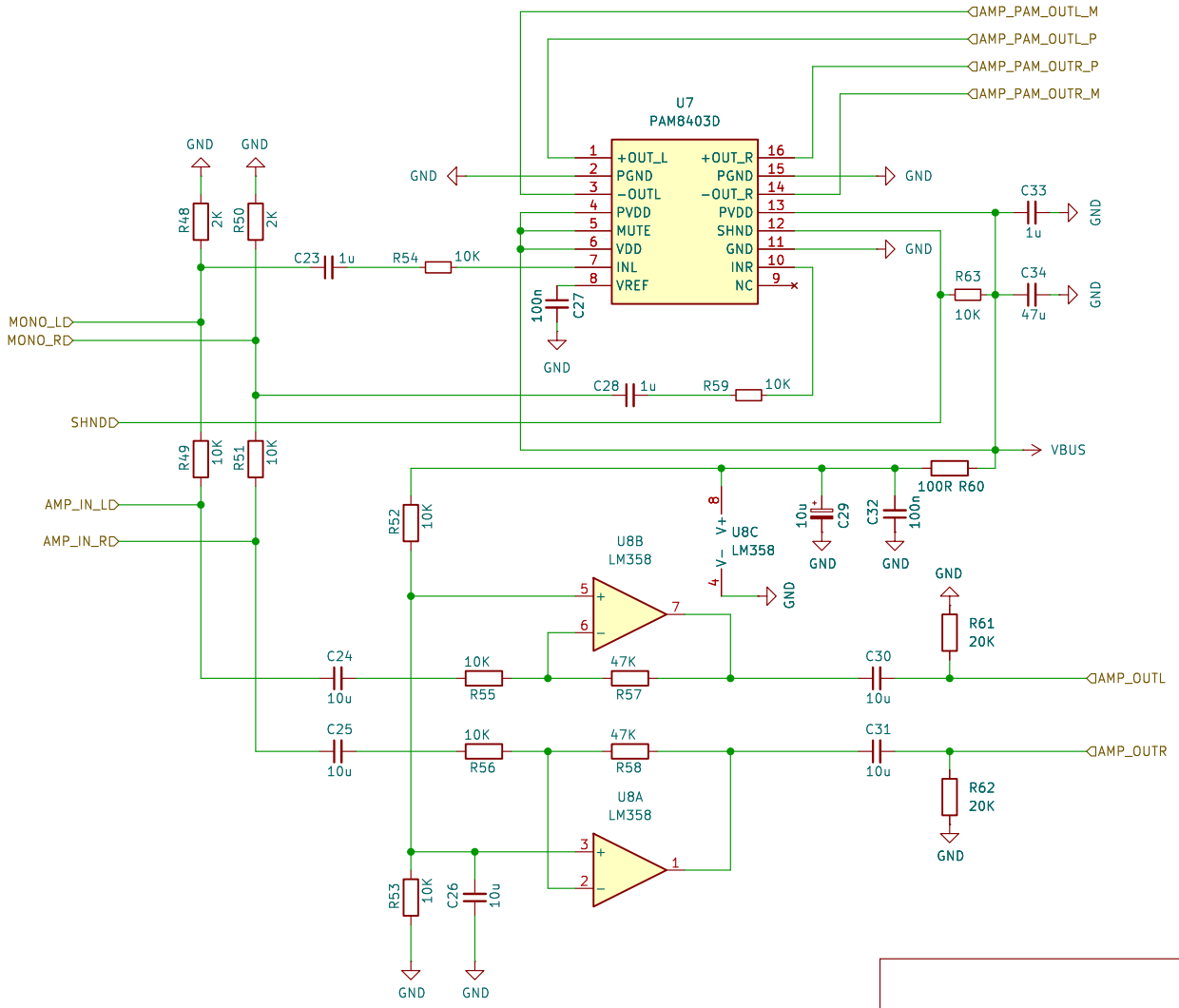

https://github.com/xtremespb/frank

Mikhail Matveev

Sheet: /Audio/Amplifier/

File: amp.kicad_sch

Title: FRANK M2

Size: A4	Date: 2026-03-24	**Rev: 2.06**
KiCad E.D.A. 9.0.7		Id: 44/19

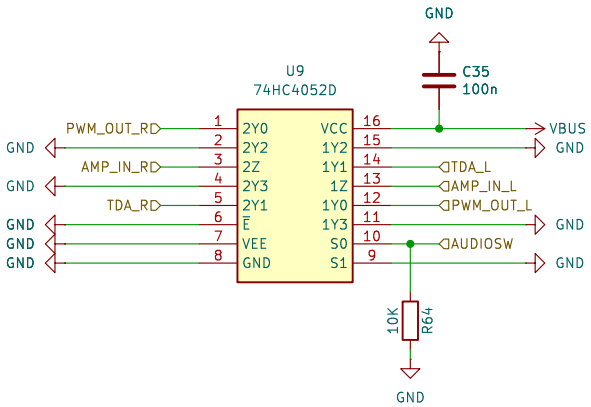

https://github.com/xtremespb/frank

Mikhail Matveev

Sheet: /Audio Multiplexer/

File: audio_multiplexer.kicad_sch

Title: FRANK M2

Size: A4	Date: 2026-03-24	**Rev: 2.06**
KiCad E.D.A. 9.0.7		Id: 45/19

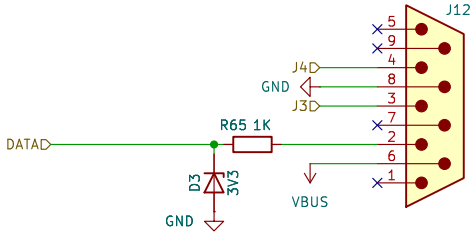

https://github.com/xtremespb/frank

Mikhail Matveev

Sheet: /Gamepad 1/

File: gamepad.kicad_sch

Title: FRANK M2

Size: A4	Date: 2026-03-24	**Rev: 2.06**
KiCad E.D.A. 9.0.7		Id: 46/19

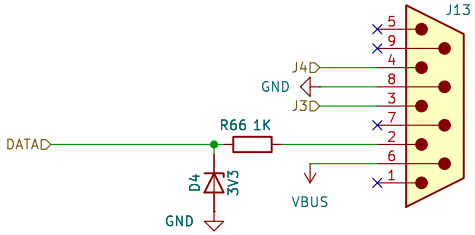

https://github.com/xtremespb/frank

Mikhail Matveev

Sheet: /Gamepad 2/

File: gamepad.kicad_sch

Title: FRANK M2

Size: A4	Date: 2026-03-24	**Rev: 2.06**
KiCad E.D.A. 9.0.7		Id: 48/19

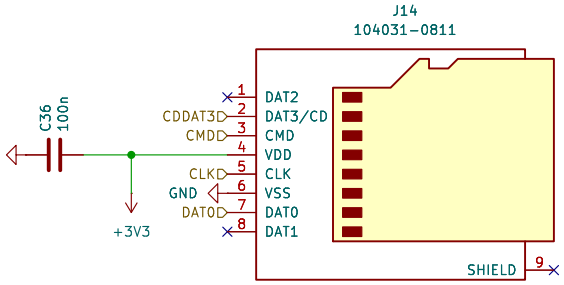

https://github.com/xtremespb/frank

Mikhail Matveev

Sheet: /Micro SD/

File: sd.kicad_sch

Title: FRANK M2

Size: A4	Date: 2026-03-24	**Rev: 2.06**
KiCad E.D.A. 9.0.7		Id: 49/19

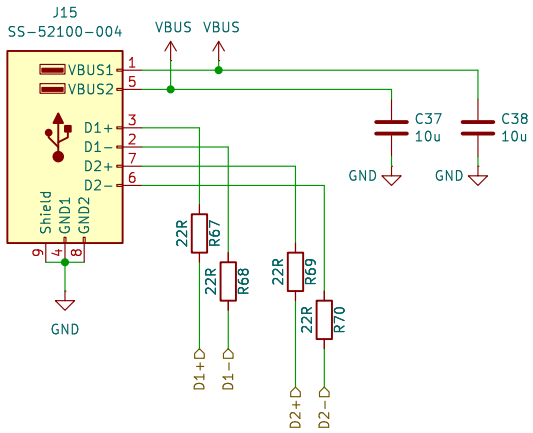

https://github.com/xtremespb/frank

Mikhail Matveev

Sheet: /USB Stacked/

File: usbstack.kicad_sch

Title: FRANK M2

Size: A4	Date: 2026-03-24	**Rev: 2.06**
KiCad E.D.A. 9.0.7		Id: 51/19

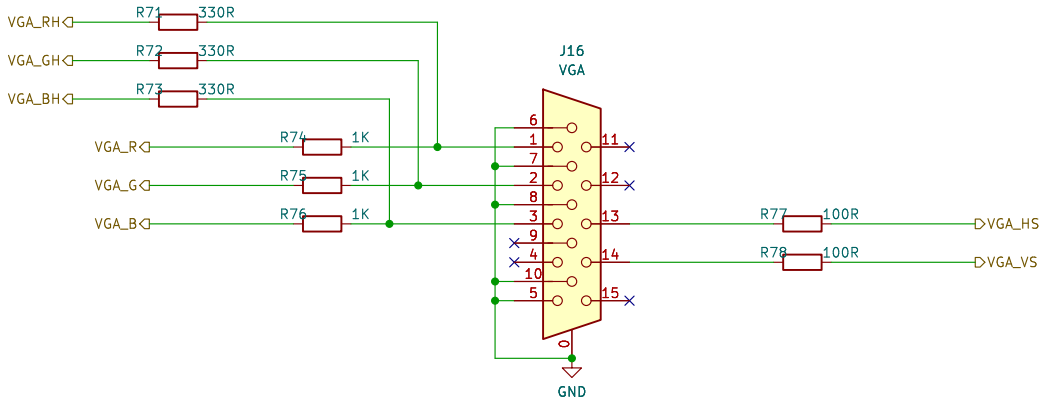

https://github.com/xtremespb/frank

Mikhail Matveev

Sheet: /VGA/

File: vga.kicad_sch

Title: FRANK M2

Size: A4	Date: 2026-03-24	**Rev: 2.06**
KiCad E.D.A. 9.0.7		Id: 52/19

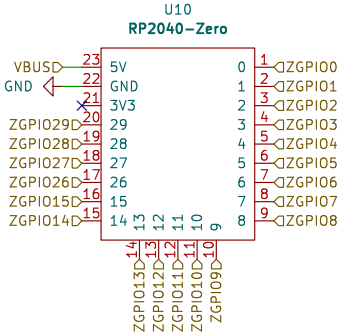

https://github.com/xtremespb/frank

Mikhail Matveev

Sheet: /Zero/

File: zero.kicad_sch

Title: FRANK M2

Size: A4	Date: 2026-03-24	**Rev: 2.06**
KiCad E.D.A. 9.0.7		Id: 53/19