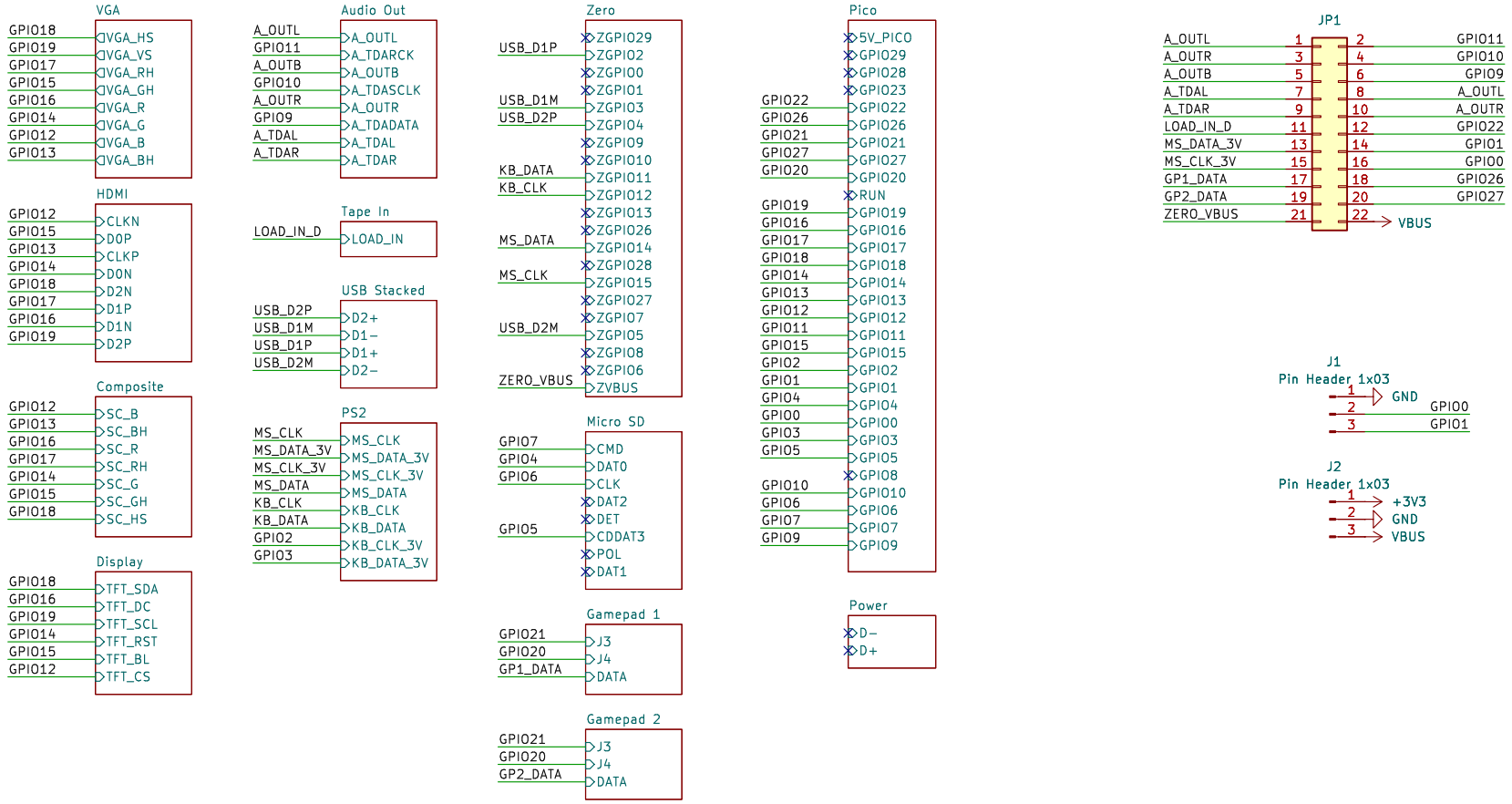

H1
Hole 2.7mm
H2
Hole 2.7mm
H3
Hole 2.7mm
H4
Hole 2.7mm

https://github.com/xtremespb/frank

Mikhail Matveev

Sheet: /
File: HR3FQ.kicad_sch

Title: FRANK M2

Size: A4	Date: 2025-08-20	**Rev: 1.04**
KiCad E.D.A. 9.0.3		Id: 1/15

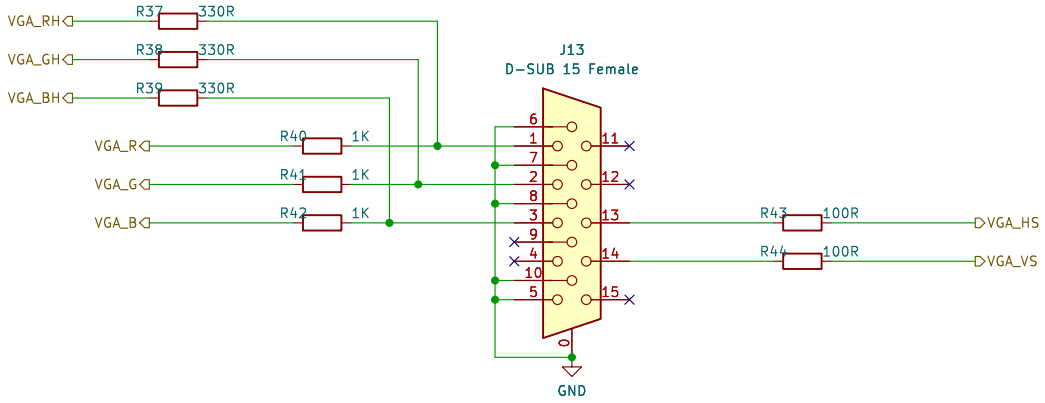

https://github.com/xtremespb/frank

Mikhail Matveev

Sheet: /VGA/

File: vga.kicad_sch

Title: FRANK M2

Size: A4	Date: 2025-08-20	**Rev: 1.04**
KiCad E.D.A. 9.0.3		Id: 16/15

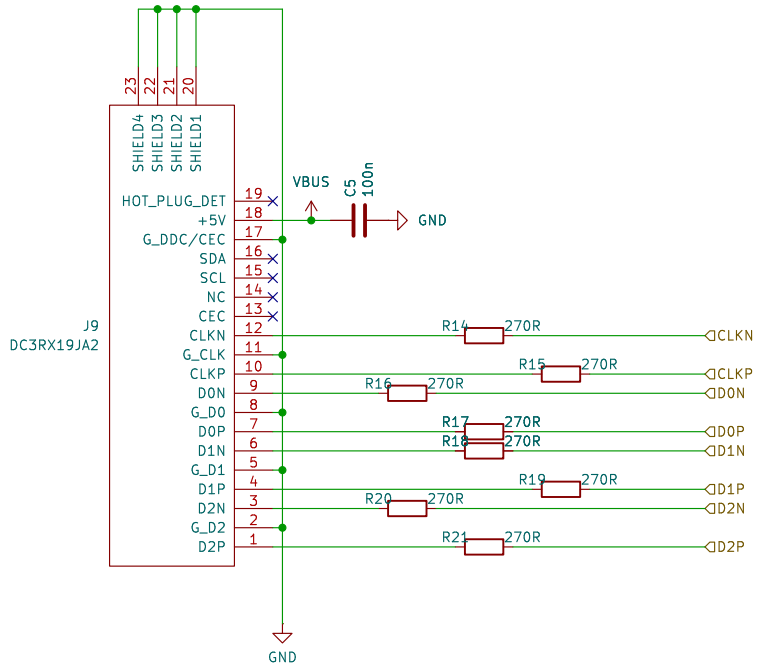

https://github.com/xtremespb/frank

Mikhail Matveev

Sheet: /HDMI/

File: hdmi.kicad_sch

Title: FRANK M2

Size: A4	Date: 2025-08-20	**Rev: 1.04**
KiCad E.D.A. 9.0.3		Id: 10/15

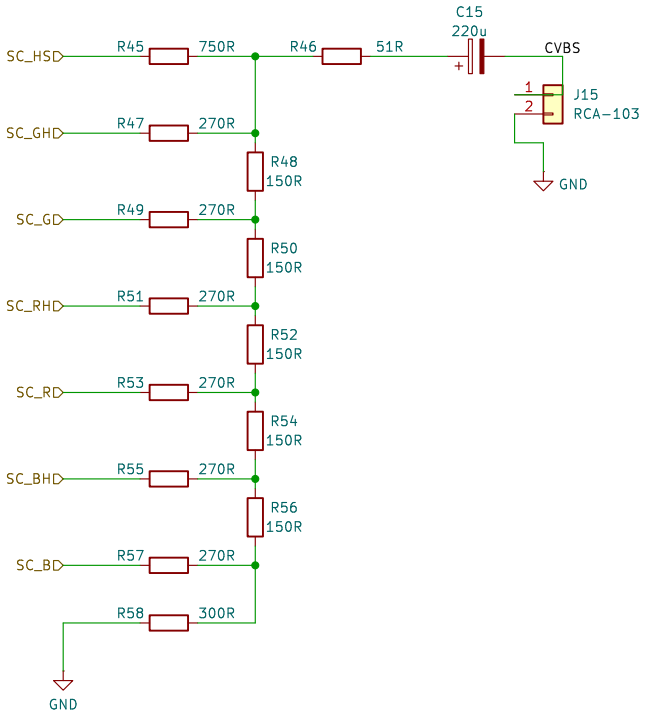

https://github.com/xtremespb/frank

Mikhail Matveev

Sheet: /Composite/

File: composite.kicad_sch

Title: FRANK M2

Size: A4	Date: 2025-08-20	**Rev: 1.04**
KiCad E.D.A. 9.0.3		Id: 18/15

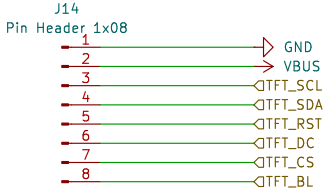

https://github.com/xtremespb/frank

Mikhail Matveev

Sheet: /Display/
File: display.kicad_sch

Title: FRANK M2

Size: A4	Date: 2025-08-20	**Rev: 1.04**
KiCad E.D.A. 9.0.3		Id: 17/15

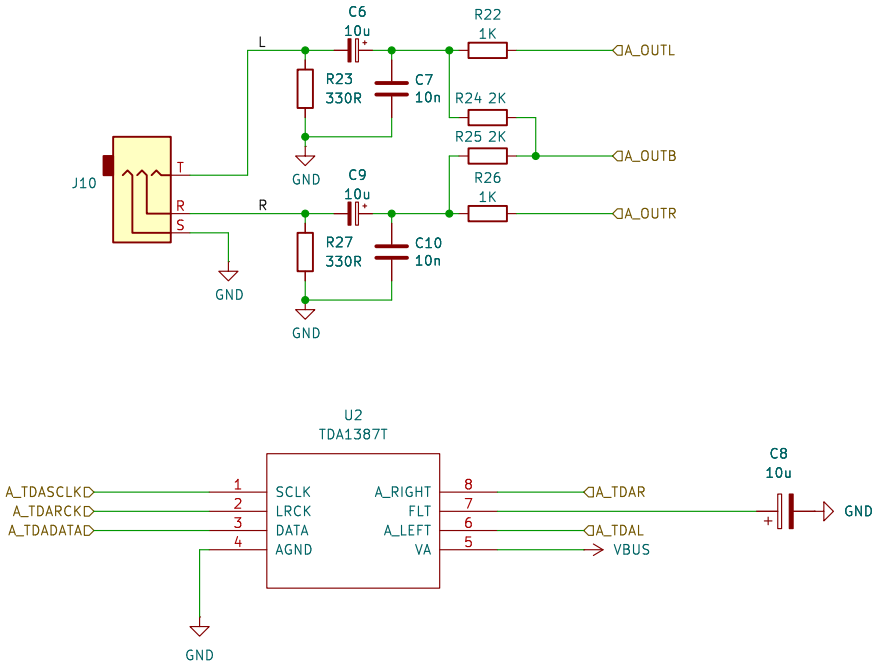

https://github.com/xtremespb/frank

Mikhail Matveev

Sheet: /Audio Out/

File: audio.kicad_sch

Title: FRANK M2

Size: A4	Date: 2025-08-20	**Rev: 1.04**
KiCad E.D.A. 9.0.3		Id: 12/15

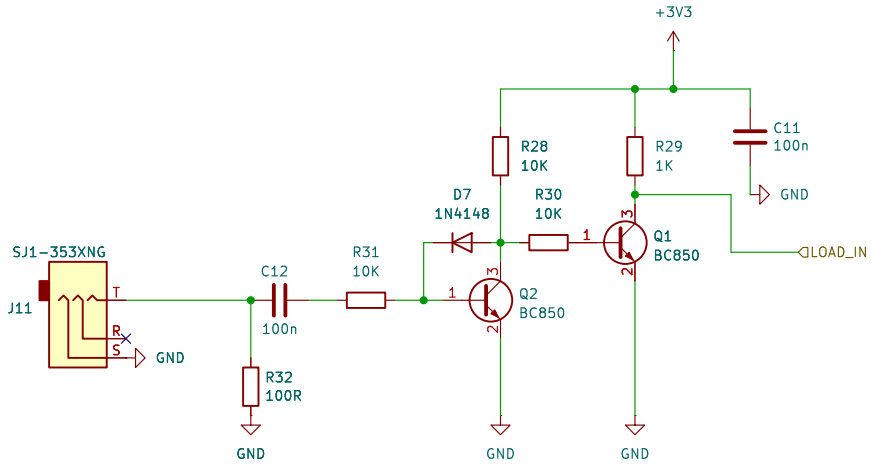

https://github.com/xtremespb/frank

Mikhail Matveev

Sheet: /Tape In/

File: tape.kicad_sch

Title: FRANK M2

Size: A4	Date: 2025-08-20	**Rev: 1.04**
KiCad E.D.A. 9.0.3		Id: 12/15

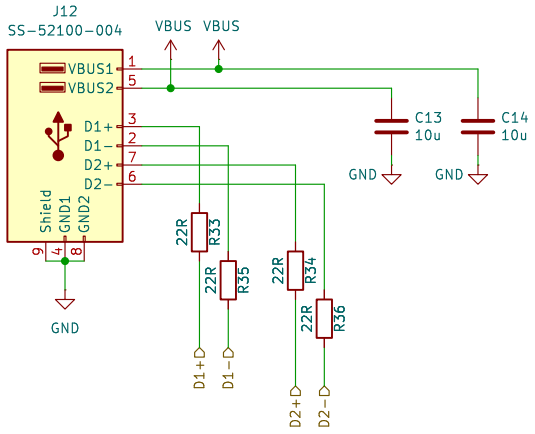

https://github.com/xtremespb/frank

Mikhail Matveev

Sheet: /USB Stacked/

File: usbstack.kicad_sch

Title: FRANK M2

Size: A4	Date: 2025-08-20	**Rev: 1.04**
KiCad E.D.A. 9.0.3		Id: 15/15

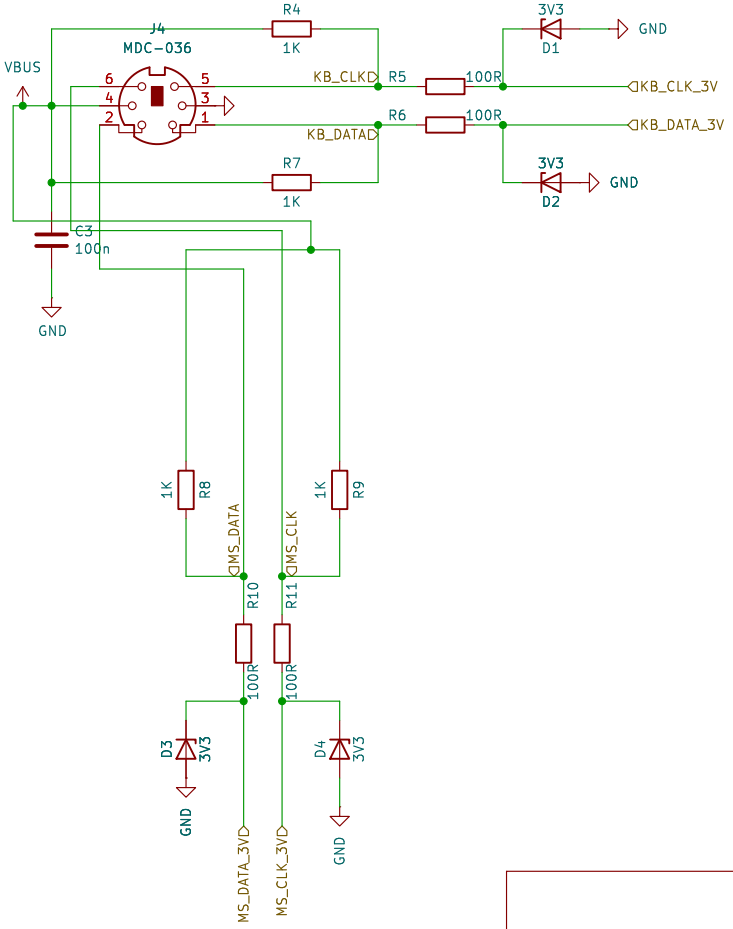

https://github.com/xtremespb/frank

Mikhail Matveev

Sheet: /PS2/

File: ps2.kicad_sch

Title: FRANK M2

Size: A4	Date: 2025-08-20	**Rev: 1.04**
KiCad E.D.A. 9.0.3		Id: 4/15

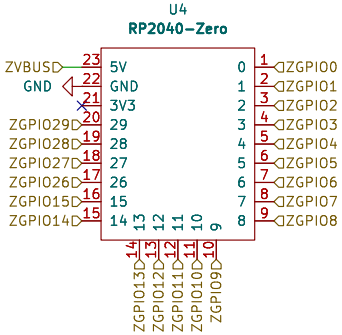

https://github.com/xtremespb/frank

Mikhail Matveev

Sheet: /Zero/

File: zero.kicad_sch

Title: FRANK M2

Size: A4	Date: 2025-08-20	**Rev: 1.04**
KiCad E.D.A. 9.0.3		Id: 14/15

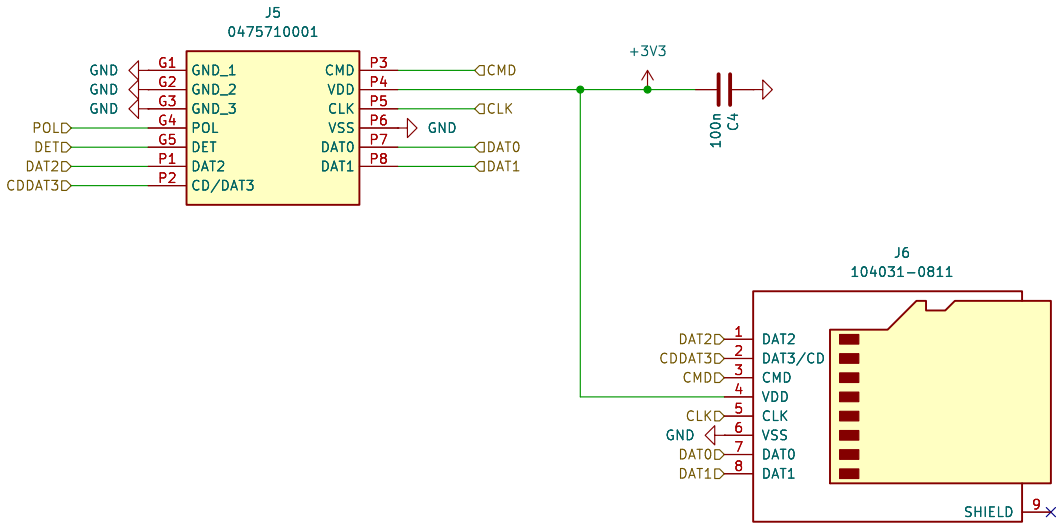

https://github.com/xtremespb/frank

Mikhail Matveev

Sheet: /Micro SD/

File: sd.kicad_sch

Title: FRANK M2

Size: A4	Date: 2025-08-20	**Rev: 1.04**
KiCad E.D.A. 9.0.3		Id: 5/15

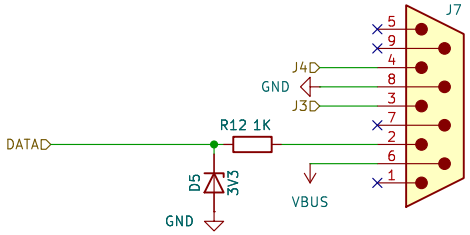

https://github.com/xtremespb/frank

Mikhail Matveev

Sheet: /Gamepad 1/
File: gamepad.kicad_sch

Title: FRANK M2

Size: A4	Date: 2025-08-20	**Rev: 1.04**
KiCad E.D.A. 9.0.3		Id: 7/15

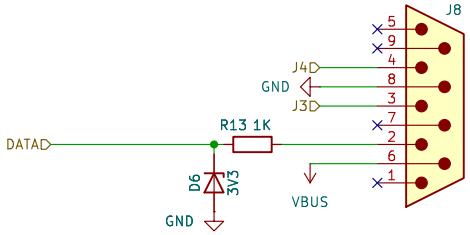

https://github.com/xtremespb/frank

Mikhail Matveev

Sheet: /Gamepad 2/

File: gamepad.kicad_sch

Title: FRANK M2

Size: A4	Date: 2025-08-20	**Rev: 1.04**
KiCad E.D.A. 9.0.3		Id: 8/15

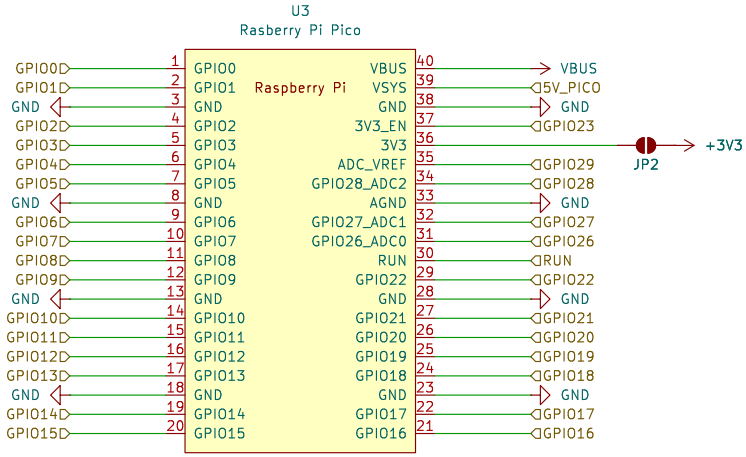

https://github.com/xtremespb/frank

Mikhail Matveev

Sheet: /Pico/

File: pico.kicad_sch

Title: FRANK M2

Size: A4	Date: 2025-08-20	**Rev: 1.04**
KiCad E.D.A. 9.0.3		Id: 12/15

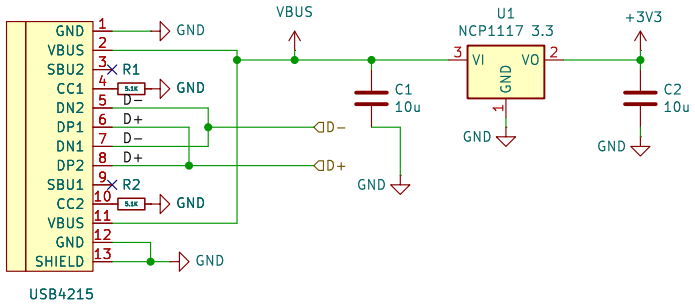

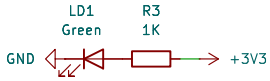

https://github.com/xtremespb/frank

Mikhail Matveev

Sheet: /Power/
File: power.kicad_sch

Title: FRANK M2

Size: A4	Date: 2025-08-20	**Rev: 1.04**
KiCad E.D.A. 9.0.3		Id: 3/15