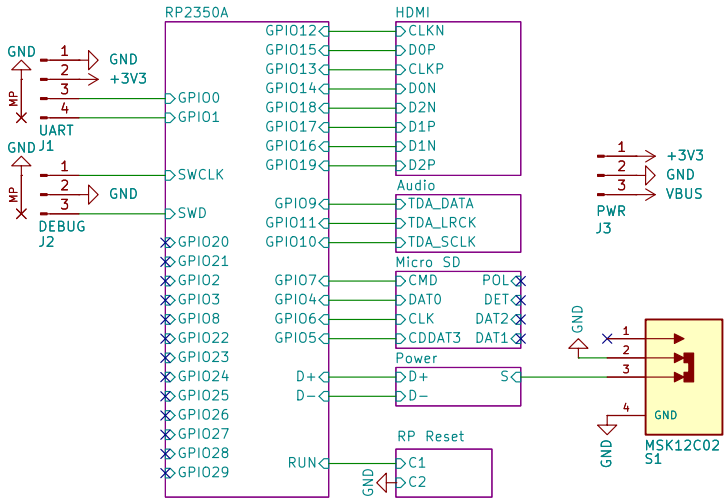

H1 Hole 2.7mm
H2 Hole 2.7mm
H3 Hole 2.7mm
H4 Hole 2.7mm

https://github.com/rh1tech/frank

Mikhail Matveev

Sheet: /
File: tinyfrank_m2p2.kicad_sch

Title: TinyFRANK M2P2

Size: A4	Date: 2026-04-19	**Rev: 1.00**
KiCad E.D.A. 10.0.1		Id: 1/10

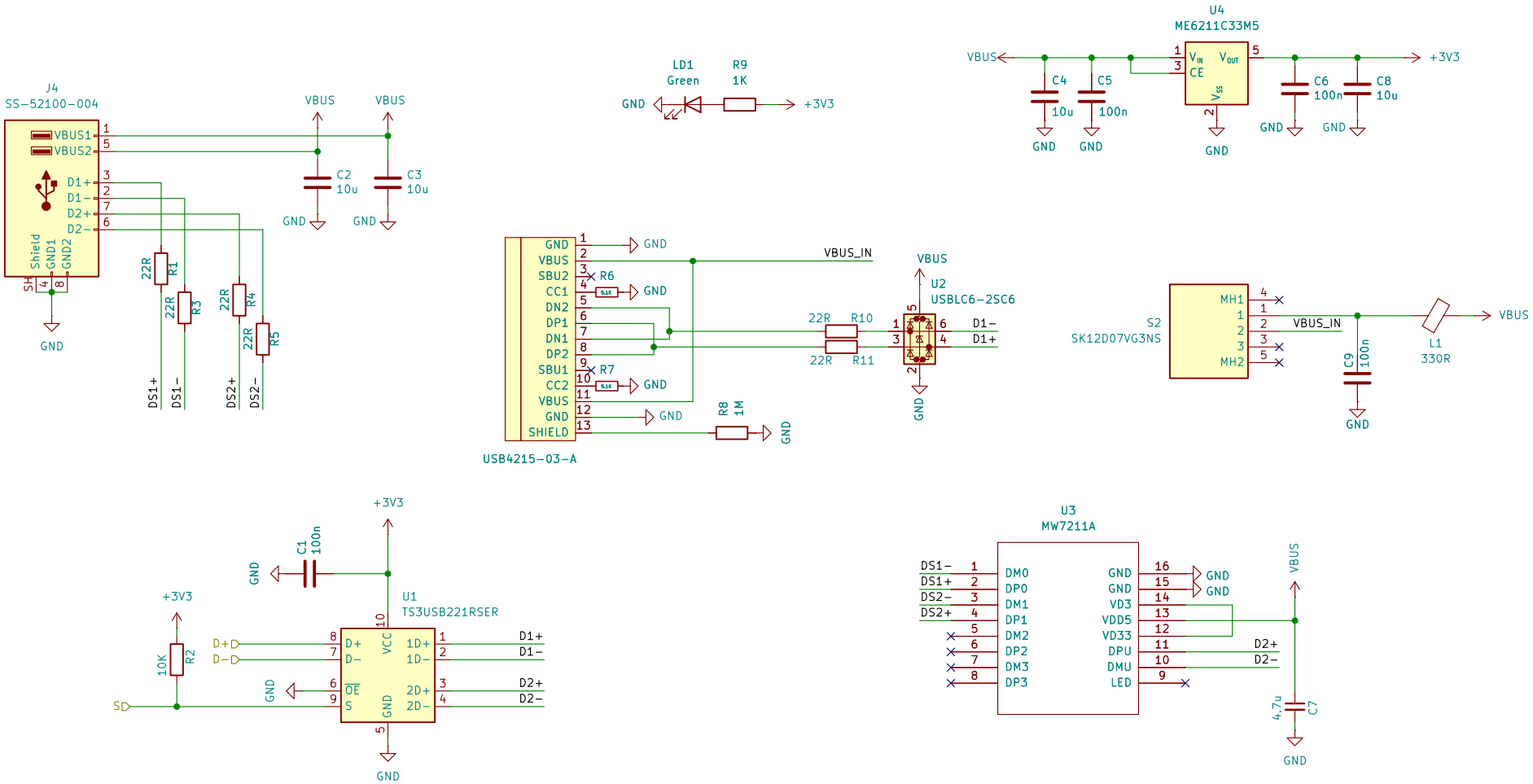

https://github.com/rh1tech/frank

Mikhail Matveev

Sheet: /Power/

File: power.kicad_sch

Title: TinyFRANK M2P2

Size: A4	Date: 2026-04-19	**Rev: 1.00**
KiCad E.D.A. 10.0.1		Id: 3/10

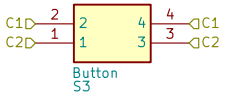

https://github.com/rh1tech/frank

Mikhail Matveev

Sheet: /RP Reset/
File: button.kicad_sch

Title: TinyFRANK M2P2

Size: A4	Date: 2026-04-19	**Rev: 1.00**
KiCad E.D.A. 10.0.1		Id: 4/10

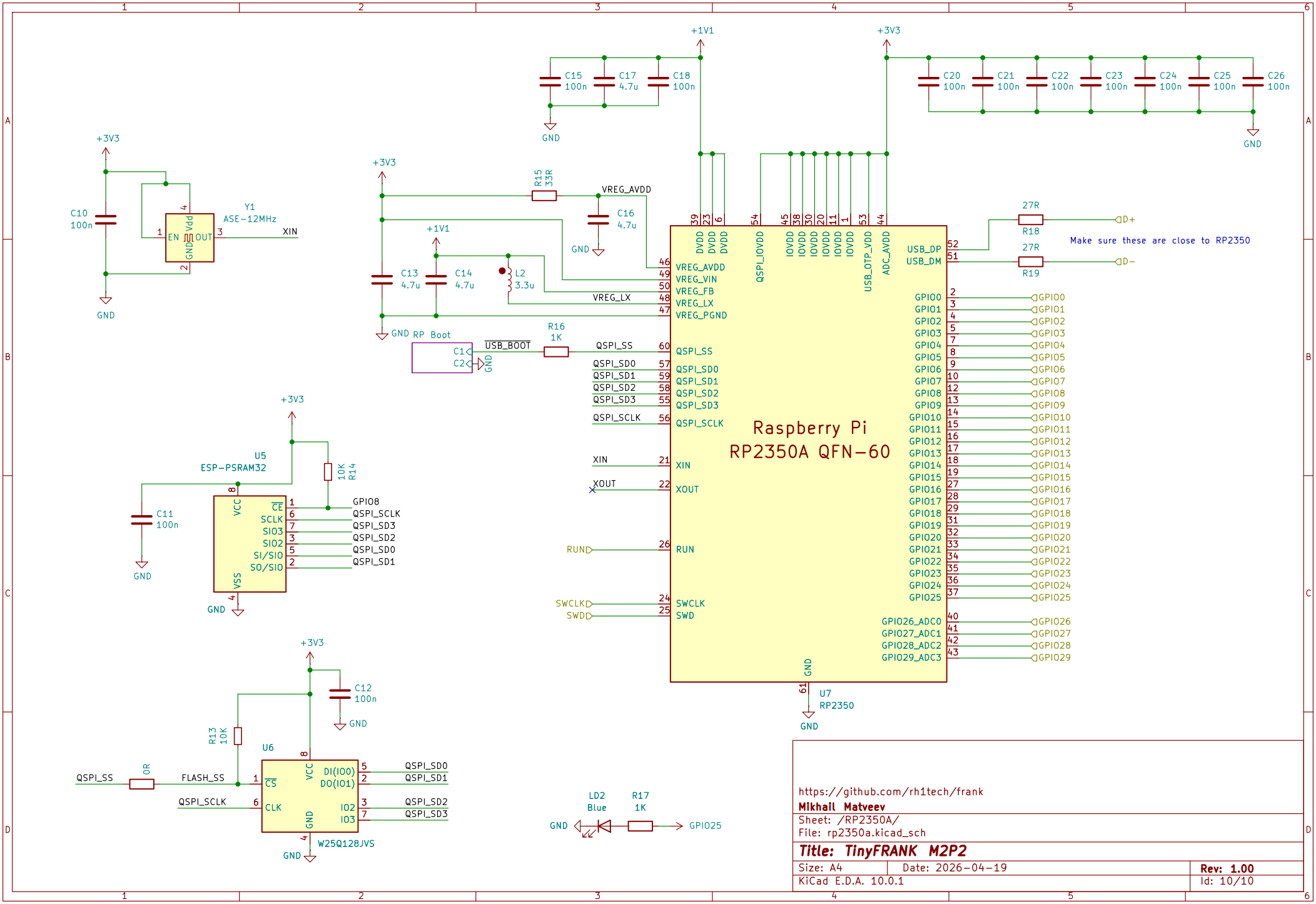
Raspberry Pi
RP2350A QFN-60
U7
RP2350
Y1
ASE-12MHz
U5
ESP-PSRAM32
U6
W25Q128JVS
Make sure these are close to RP2350
https://github.com/rh1tech/frank
Mikhail Matveev
Sheet: /RP2350A/
File: rp2350a.kicad_sch
Title: TinyFRANK M2P2
Size: A4
Date: 2026-04-19
Rev: 1.00
KiCad E.D.A. 10.0.1
Id: 10/10

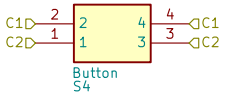

https://github.com/rh1tech/frank

Mikhail Matveev

Sheet: /RP2350A/RP Boot/
File: button.kicad_sch

Title: TinyFRANK M2P2

Size: A4	Date: 2026-04-19	**Rev: 1.00**
KiCad E.D.A. 10.0.1		Id: 6/10

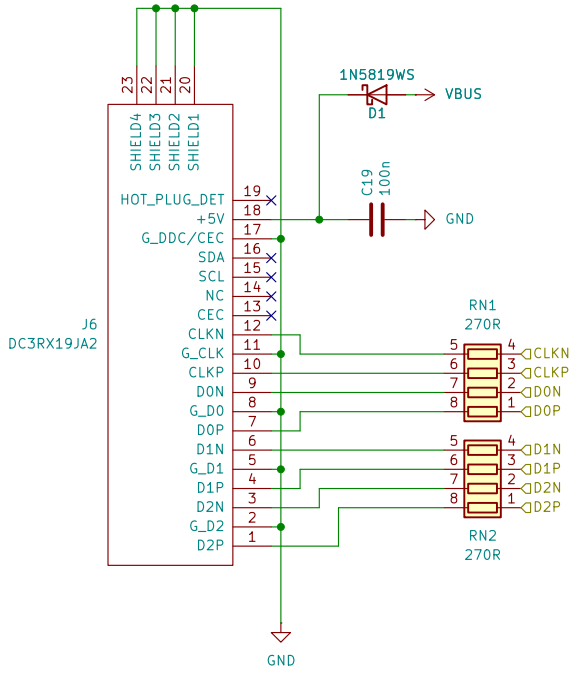

https://github.com/rh1tech/frank

Mikhail Matveev

Sheet: /HDMI/

File: hdmi.kicad_sch

Title: TinyFRANK M2P2

Size: A4	Date: 2026-04-19	**Rev: 1.00**
KiCad E.D.A. 10.0.1		Id: 10/10

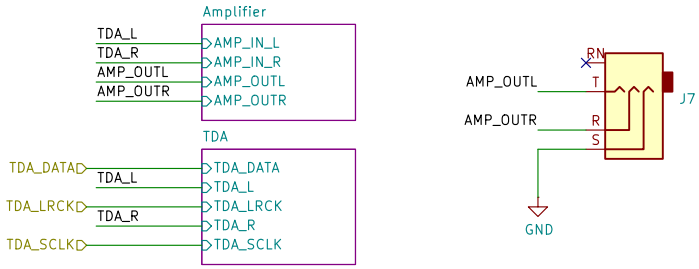

https://github.com/rh1tech/frank

Mikhail Matveev

Sheet: /Audio/

File: audio.kicad_sch

Title: TinyFRANK M2P2

Size: A4	Date: 2026-04-19	**Rev: 1.00**
KiCad E.D.A. 10.0.1		Id: 41/10

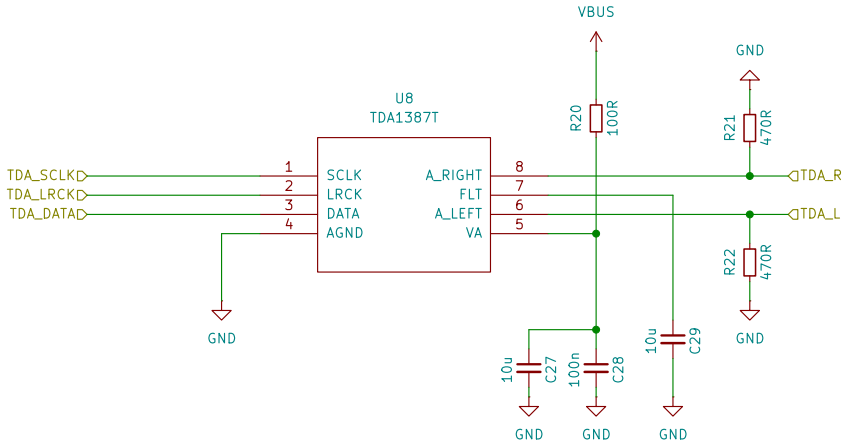

https://github.com/rh1tech/frank

Mikhail Matveev

Sheet: /Audio/TDA/

File: tda.kicad_sch

Title: TinyFRANK M2P2

Size: A4	Date: 2026-04-19	**Rev: 1.00**
KiCad E.D.A. 10.0.1		Id: 43/10

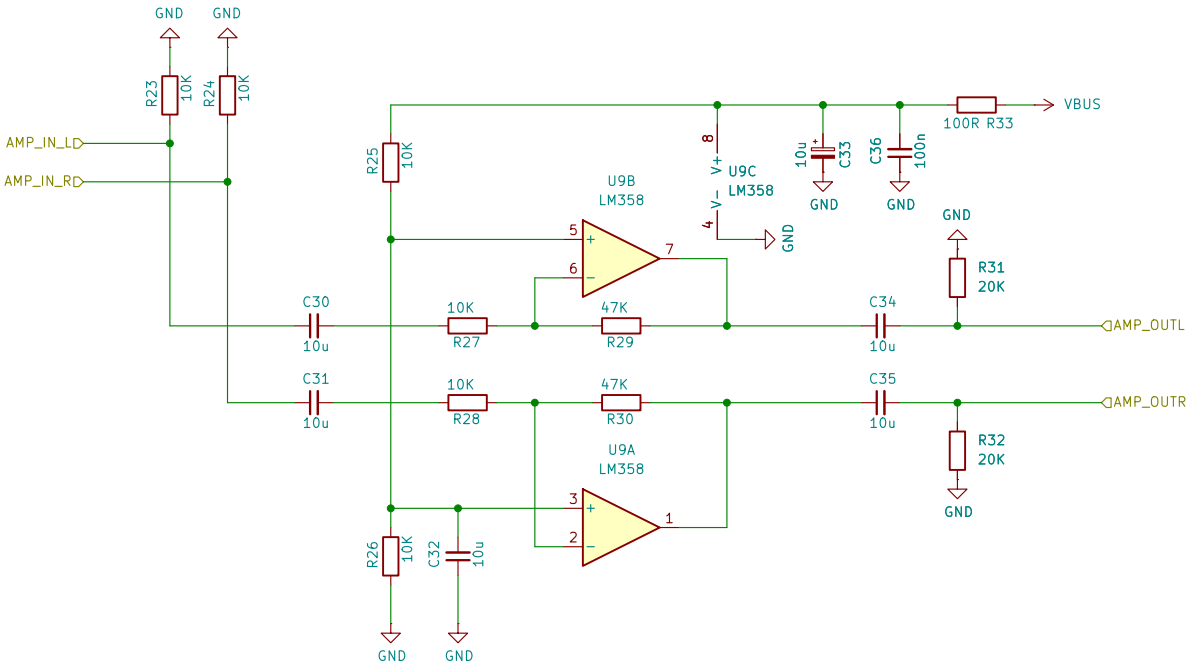

https://github.com/rh1tech/frank

Mikhail Matveev

Sheet: /Audio/Amplifier/

File: amp.kicad_sch

Title: TinyFRANK M2P2

Size: A4	Date: 2026-04-19	**Rev: 1.00**
KiCad E.D.A. 10.0.1		Id: 44/10

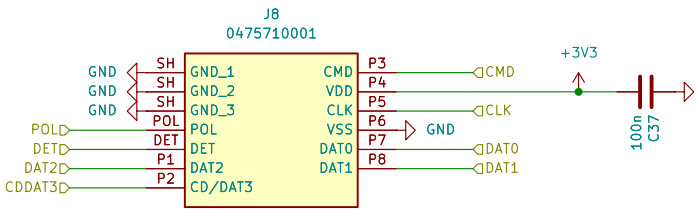

https://github.com/xtremespb/frank

Mikhail Matveev

Sheet: /Micro SD/
File: sd.kicad_sch

Title: TinyFRANK M2P2

Size: A4	Date: 2026-04-19	**Rev: 1.00**
KiCad E.D.A. 10.0.1		Id: 49/10