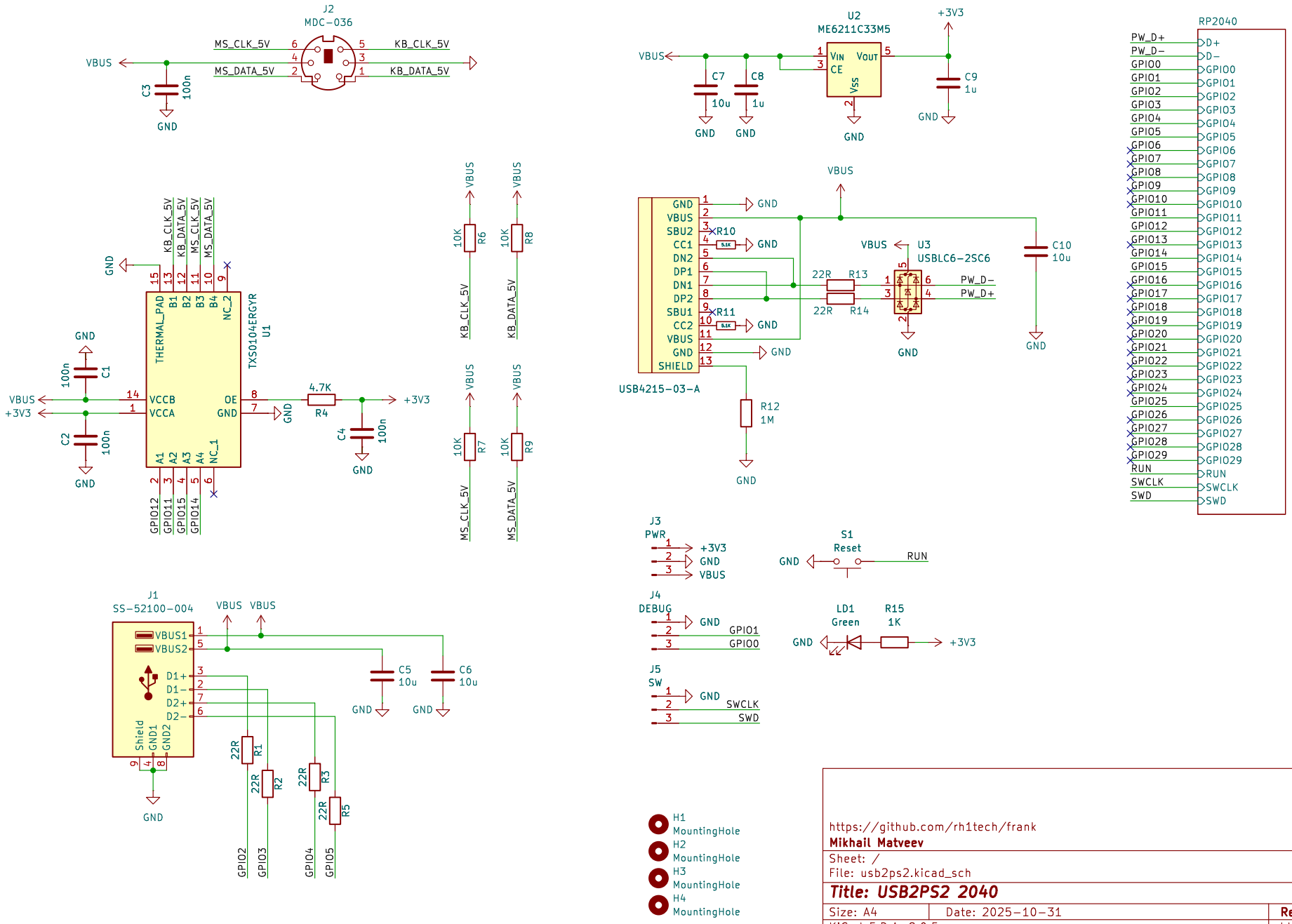

https://github.com/rh1tech/frank

Mikhail Matveev

Sheet: /

File: usb2ps2.kicad_sch

Title: USB2PS2 2040

Size: A4	Date: 2025-10-31	**Rev: 3.00**
KiCad E.D.A. 9.0.5		Id: 1/2

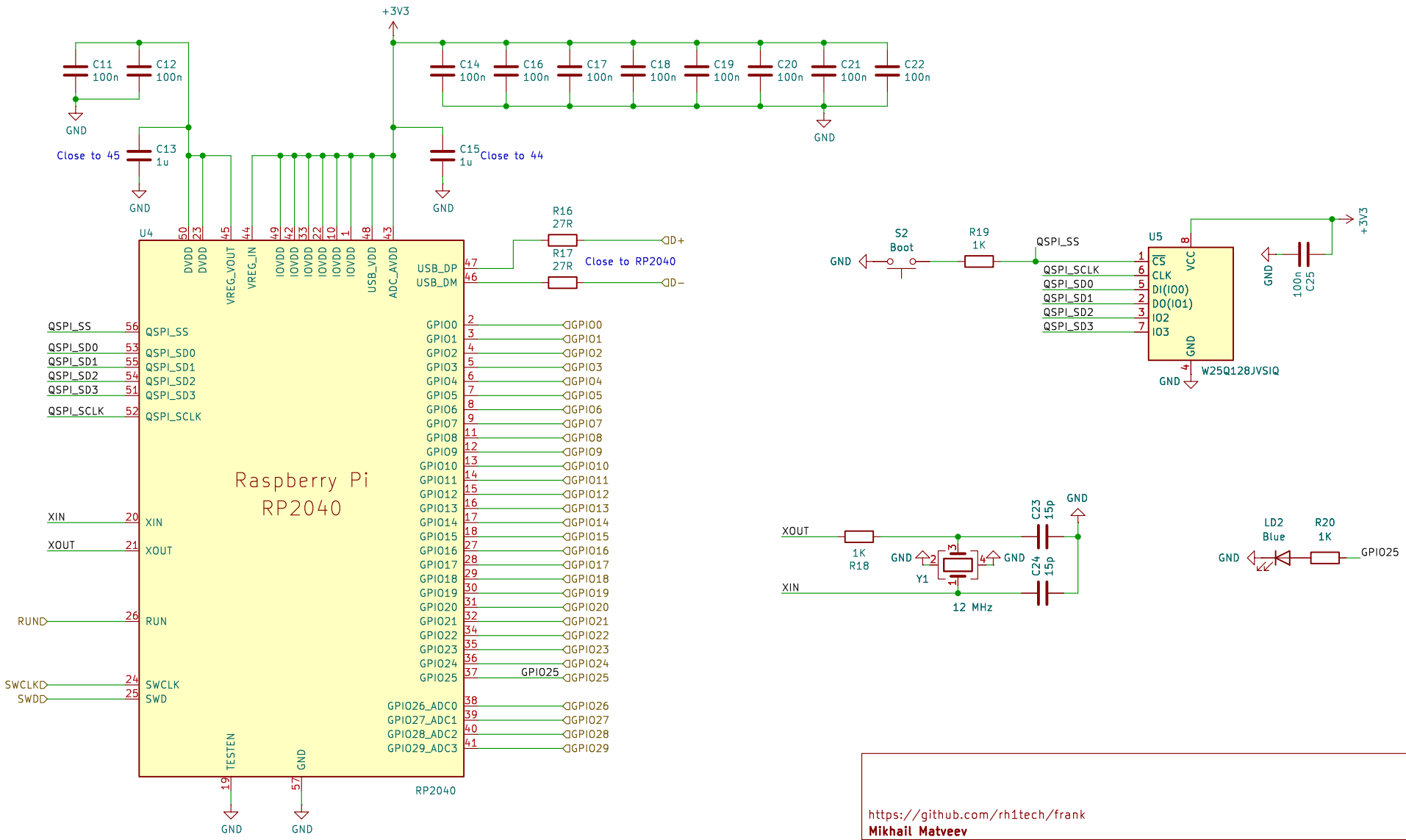

https://github.com/rh1tech/frank

Mikhail Matveev

Sheet: /RP2040/

File: rp2040.kicad_sch

Title: USB2PS2 2040

Size: A4	Date: 2025-10-31	**Rev: 3.00**
KiCad E.D.A. 9.0.5		Id: 8/2