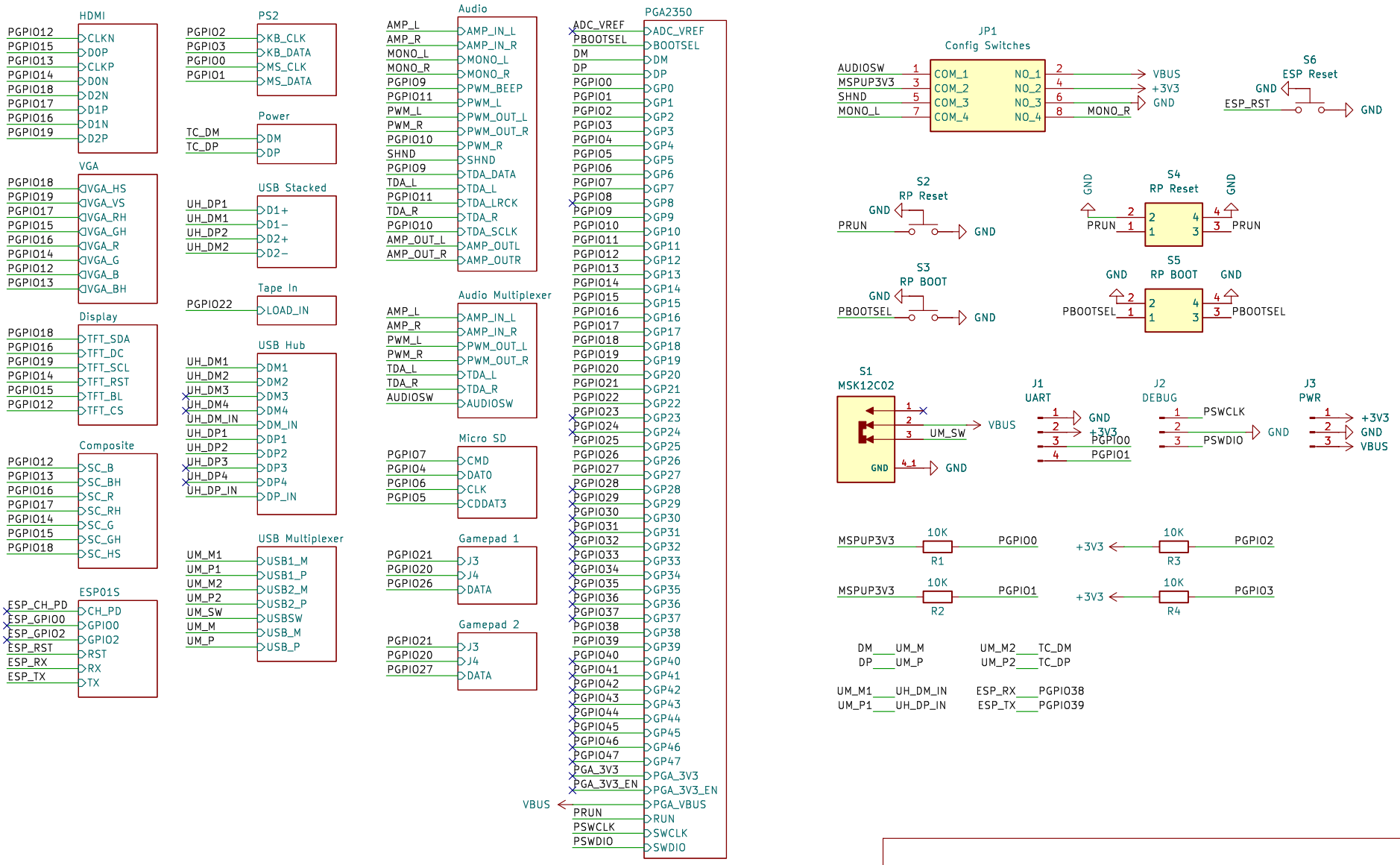

https://github.com/rh1tech/frank

Mikhail Matveev

Sheet: /

File: frank_pro_m2.kicad_sch

Title: FRANK Pro M2

Size: A4	Date: 2026-04-15	**Rev: 1.00**
KiCad E.D.A. 9.0.7		Id: 1/21

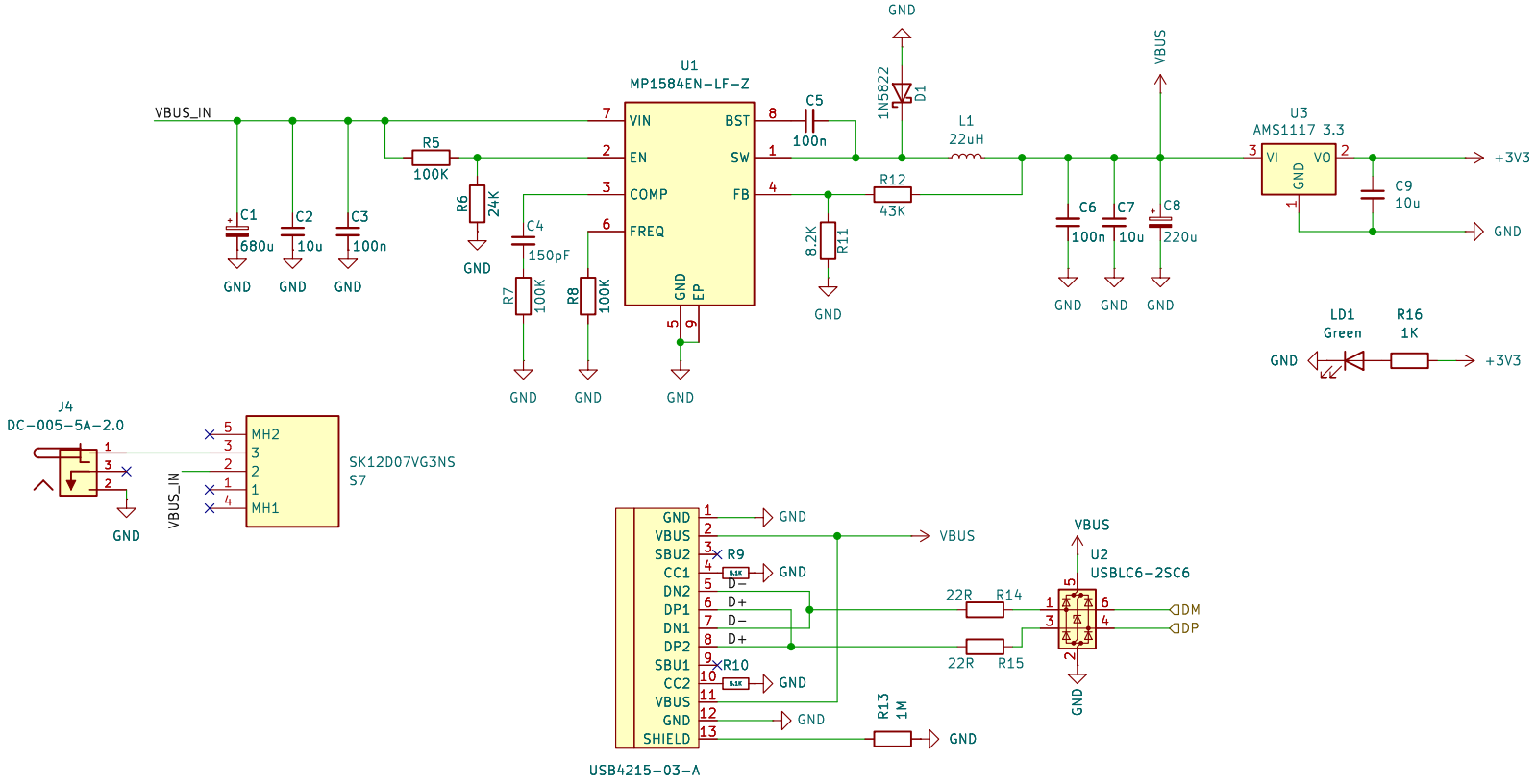

https://github.com/rh1tech/frank

Mikhail Matveev

Sheet: /Power/

File: power.kicad_sch

Title: FRANK Pro M2

Size: A4	Date: 2026-04-15	**Rev: 1.00**
KiCad E.D.A. 9.0.7		Id: 3/21

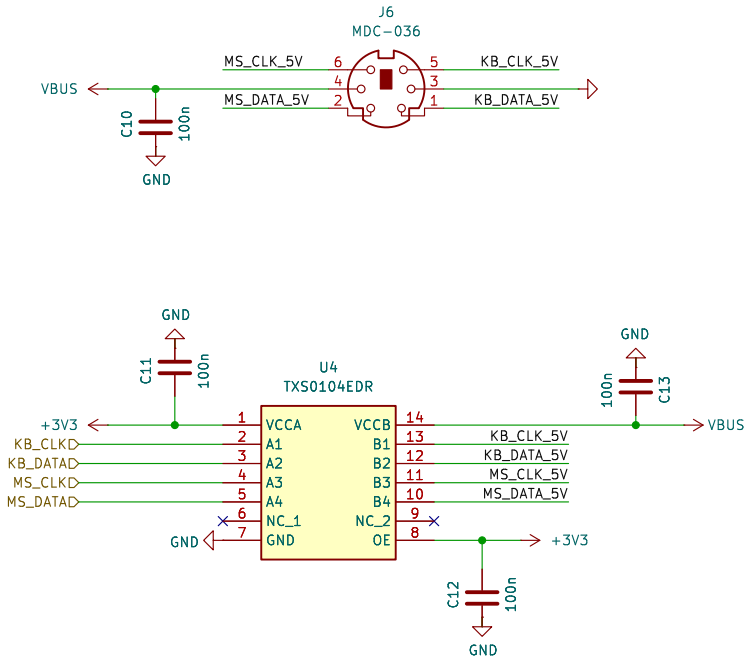

https://github.com/rh1tech/frank

Mikhail Matveev

Sheet: /PS2/

File: ps2.kicad_sch

Title: FRANK Pro M2

Size: A4	Date: 2026-04-15	**Rev: 1.00**
KiCad E.D.A. 9.0.7		Id: 4/21

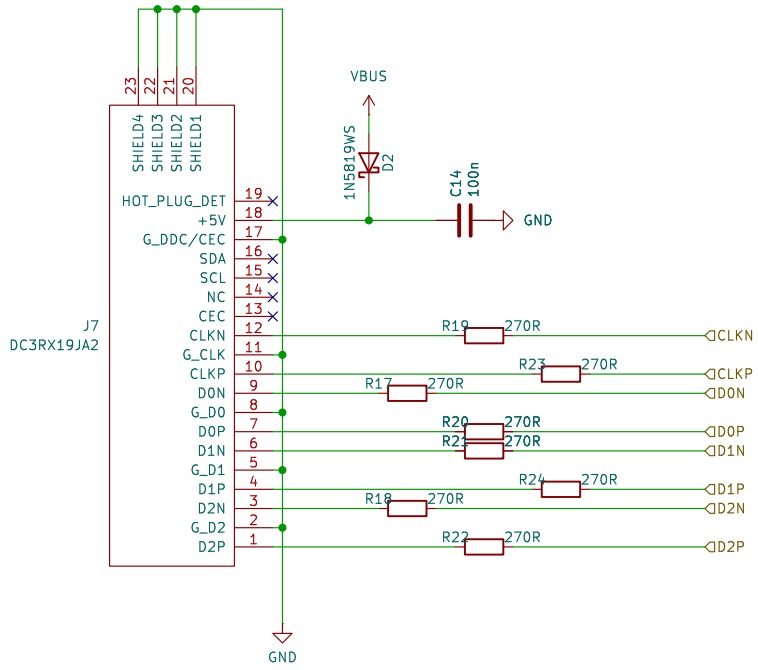

https://github.com/rh1tech/frank

Mikhail Matveev

Sheet: /HDMI/

File: hdmi.kicad_sch

Title: FRANK Pro M2

Size: A4	Date: 2026-04-15	**Rev: 1.00**
KiCad E.D.A. 9.0.7		Id: 10/21

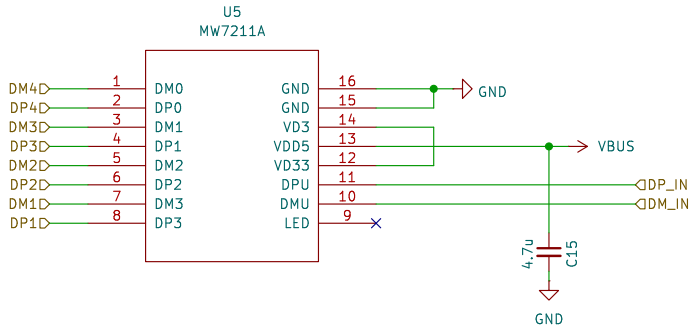

https://github.com/rh1tech/frank

Mikhail Matveev

Sheet: /USB Hub/

File: usb_hub.kicad_sch

Title: FRANK Pro M2

Size: A4	Date: 2026-04-15	**Rev: 1.00**
KiCad E.D.A. 9.0.7		Id: 19/21

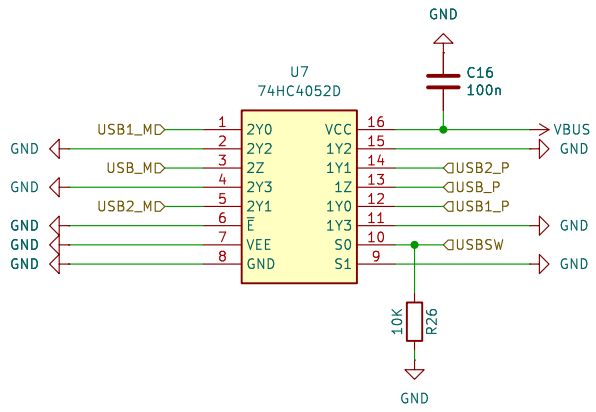

https://github.com/rh1tech/frank

Mikhail Matveev

Sheet: /USB Multiplexer/

File: usb_multiplexer.kicad_sch

Title: FRANK Pro M2

Size: A4	Date: 2026-04-15	**Rev: 1.00**
KiCad E.D.A. 9.0.7		Id: 20/21

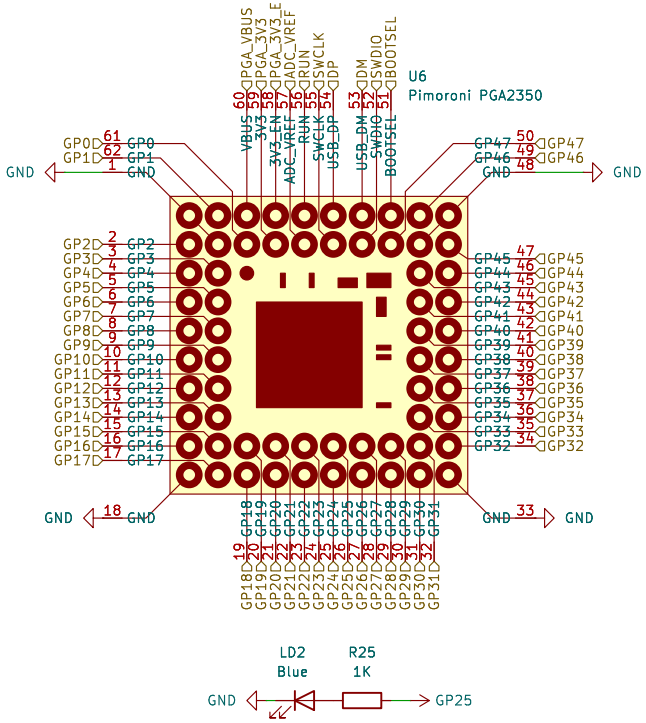

https://github.com/rh1tech/frank

Mikhail Matveev

Sheet: /PGA2350/

File: pga2350.kicad_sch

Title: FRANK Pro M2

Size: A4	Date: 2026-04-15	**Rev: 1.00**
KiCad E.D.A. 9.0.7		Id: 20/21

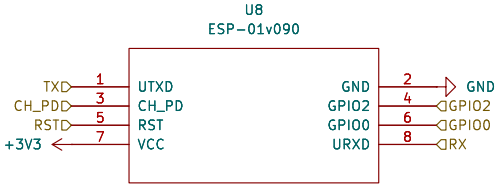

https://github.com/rh1tech/frank

Mikhail Matveev

Sheet: /ESP01S/

File: esp01s.kicad_sch

Title: FRANK Pro M2

Size: A4	Date: 2026-04-15	**Rev: 1.00**
KiCad E.D.A. 9.0.7		Id: 21/21

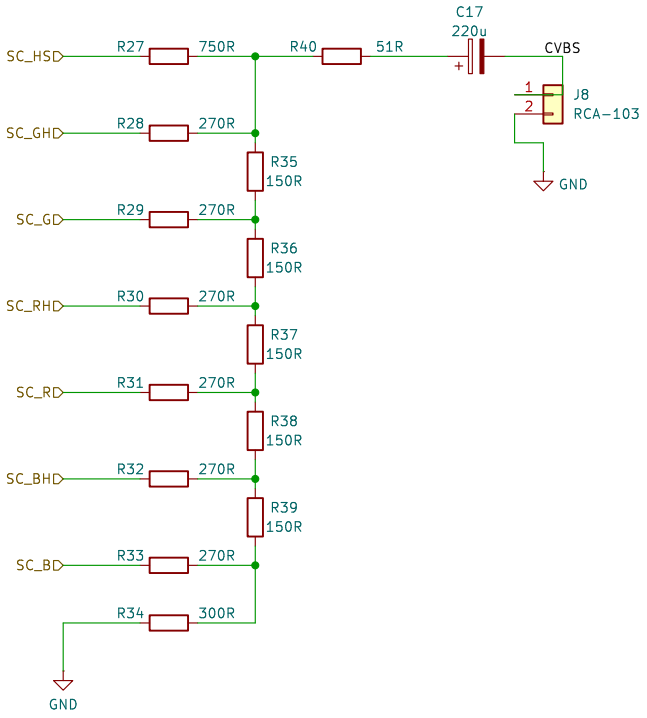

https://github.com/rh1tech/frank

Mikhail Matveev

Sheet: /Composite/

File: composite.kicad_sch

Title: FRANK Pro M2

Size: A4	Date: 2026-04-15	**Rev: 1.00**
KiCad E.D.A. 9.0.7		Id: 35/21

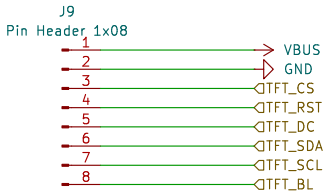

https://github.com/rh1tech/frank

Mikhail Matveev

Sheet: /Display/
File: display.kicad_sch

Title: FRANK Pro M2

Size: A4	Date: 2026-04-15	**Rev: 1.00**
KiCad E.D.A. 9.0.7		Id: 36/21

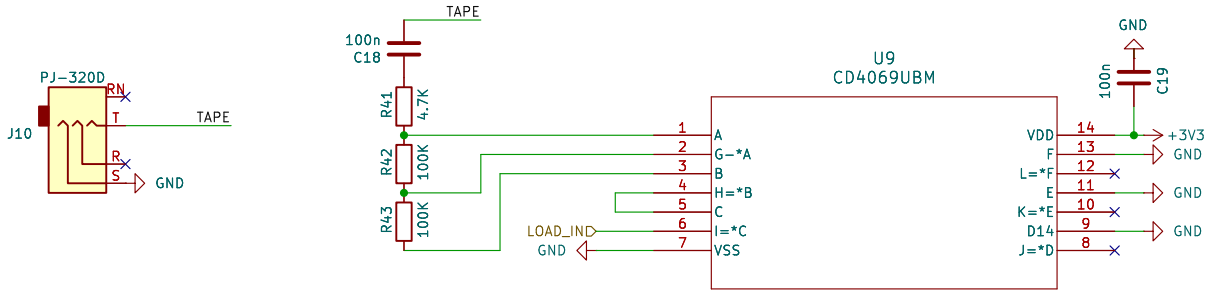

https://github.com/rh1tech/frank

Mikhail Matveev

Sheet: /Tape In/

File: tape.kicad_sch

Title: FRANK Pro M2

Size: A4	Date: 2026-04-15	**Rev: 1.00**
KiCad E.D.A. 9.0.7		Id: 39/21

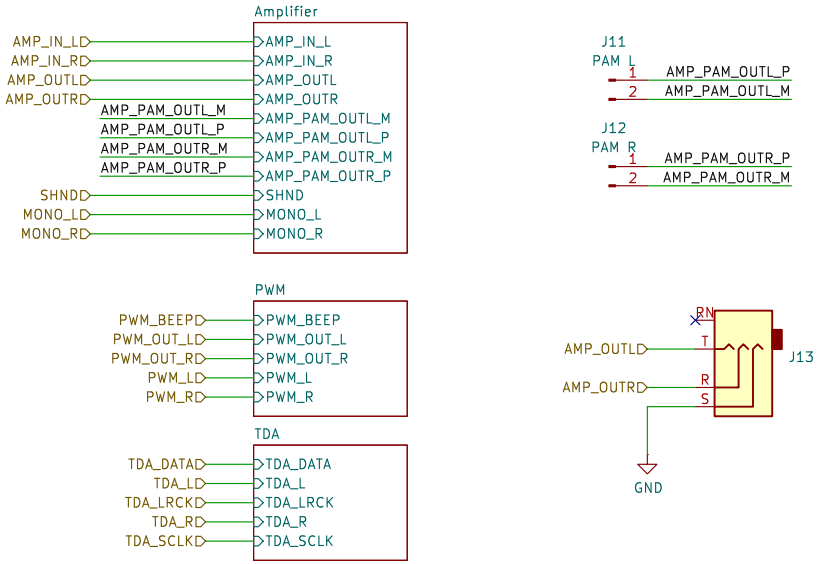

https://github.com/rh1tech/frank

Mikhail Matveev

Sheet: /Audio/

File: audio.kicad_sch

Title: FRANK Pro M2

Size: A4	Date: 2026-04-15	**Rev: 1.00**
KiCad E.D.A. 9.0.7		Id: 41/21

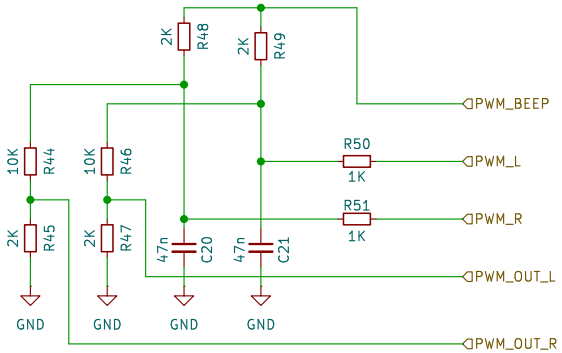

https://github.com/rh1tech/frank

Mikhail Matveev

Sheet: /Audio/PWM/
File: pwm.kicad_sch

Title: FRANK Pro M2

Size: A4	Date: 2026-04-15	**Rev: 1.00**
KiCad E.D.A. 9.0.7		Id: 42/21

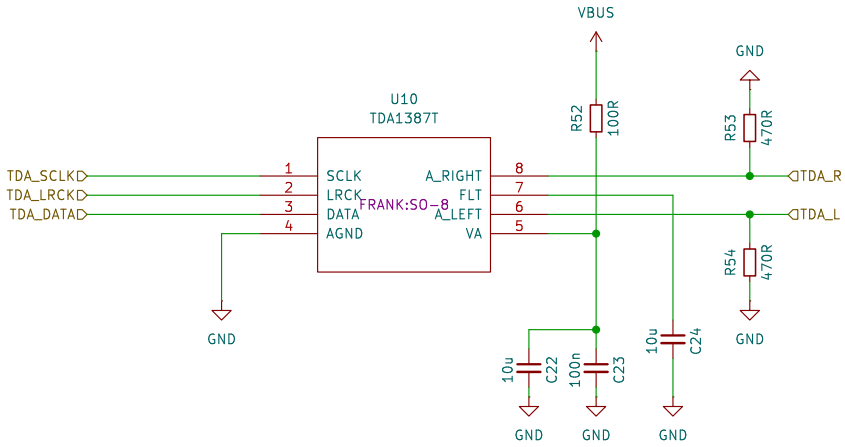

https://github.com/rh1tech/frank

Mikhail Matveev

Sheet: /Audio/TDA/

File: tda.kicad_sch

Title: FRANK Pro M2

Size: A4	Date: 2026-04-15	**Rev: 1.00**
KiCad E.D.A. 9.0.7		Id: 43/21

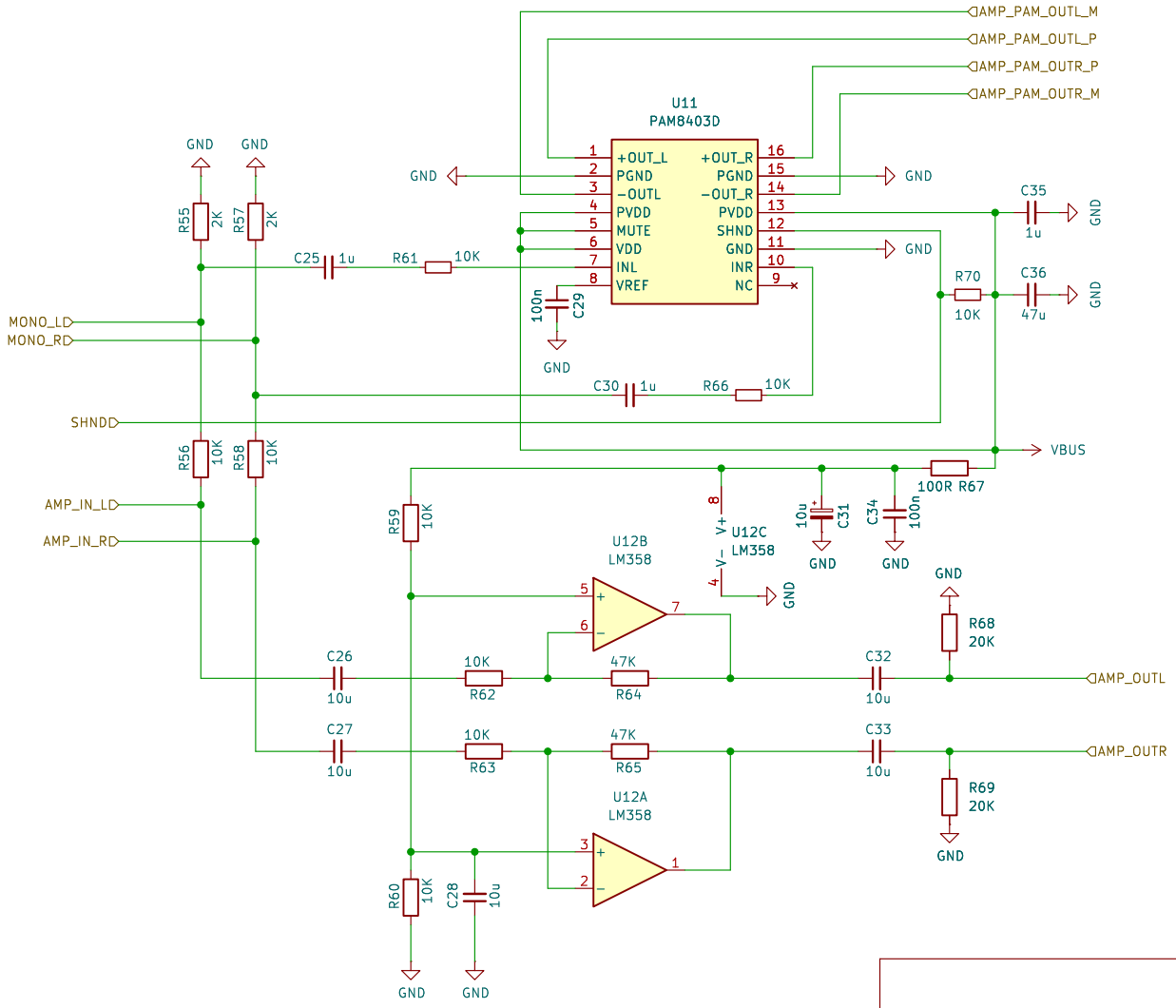

https://github.com/rh1tech/frank

Mikhail Matveev

Sheet: /Audio/Amplifier/

File: amp.kicad_sch

Title: FRANK Pro M2

Size: A4	Date: 2026-04-15	**Rev: 1.00**
KiCad E.D.A. 9.0.7		Id: 44/21

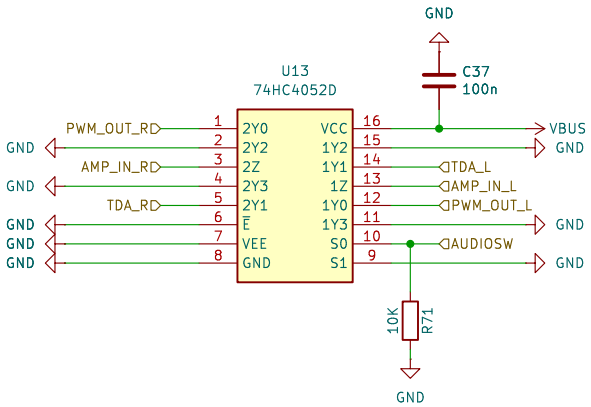

https://github.com/rh1tech/frank

Mikhail Matveev

Sheet: /Audio Multiplexer/

File: audio_multiplexer.kicad_sch

Title: FRANK Pro M2

Size: A4	Date: 2026-04-15	**Rev: 1.00**
KiCad E.D.A. 9.0.7		Id: 45/21

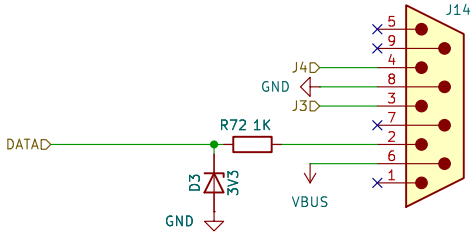

https://github.com/rh1tech/frank

Mikhail Matveev

Sheet: /Gamepad 1/
File: gamepad.kicad_sch

Title: FRANK Pro M2

Size: A4	Date: 2026-04-15	**Rev: 1.00**
KiCad E.D.A. 9.0.7		Id: 46/21

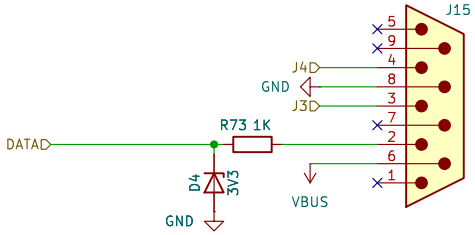

https://github.com/rh1tech/frank

Mikhail Matveev

Sheet: /Gamepad 2/

File: gamepad.kicad_sch

Title: FRANK Pro M2

Size: A4	Date: 2026-04-15	**Rev: 1.00**
KiCad E.D.A. 9.0.7		Id: 48/21

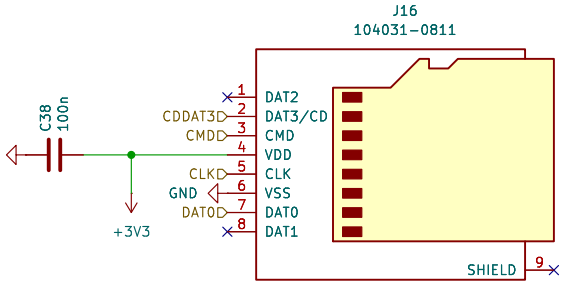

https://github.com/rh1tech/frank

Mikhail Matveev

Sheet: /Micro SD/
File: sd.kicad_sch

Title: FRANK Pro M2

Size: A4	Date: 2026-04-15	**Rev: 1.00**
KiCad E.D.A. 9.0.7		Id: 49/21

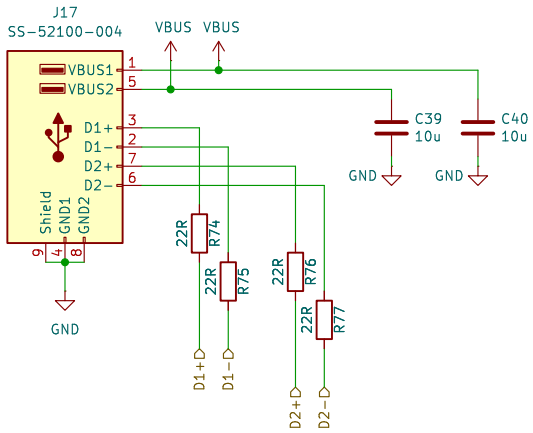

https://github.com/rh1tech/frank

Mikhail Matveev

Sheet: /USB Stacked/

File: usbstack.kicad_sch

Title: FRANK Pro M2

Size: A4	Date: 2026-04-15	**Rev: 1.00**
KiCad E.D.A. 9.0.7		Id: 51/21

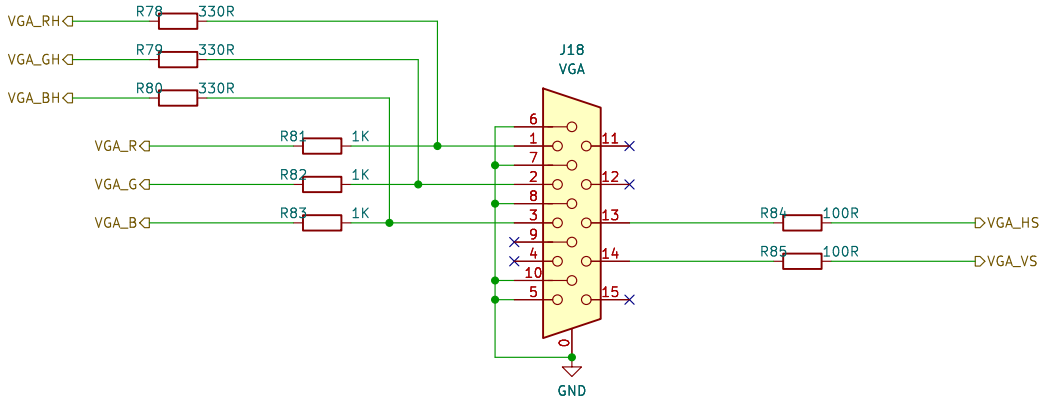

https://github.com/rh1tech/frank

Mikhail Matveev

Sheet: /VGA/

File: vga.kicad_sch

Title: FRANK Pro M2

Size: A4	Date: 2026-04-15	**Rev: 1.00**
KiCad E.D.A. 9.0.7		Id: 52/21