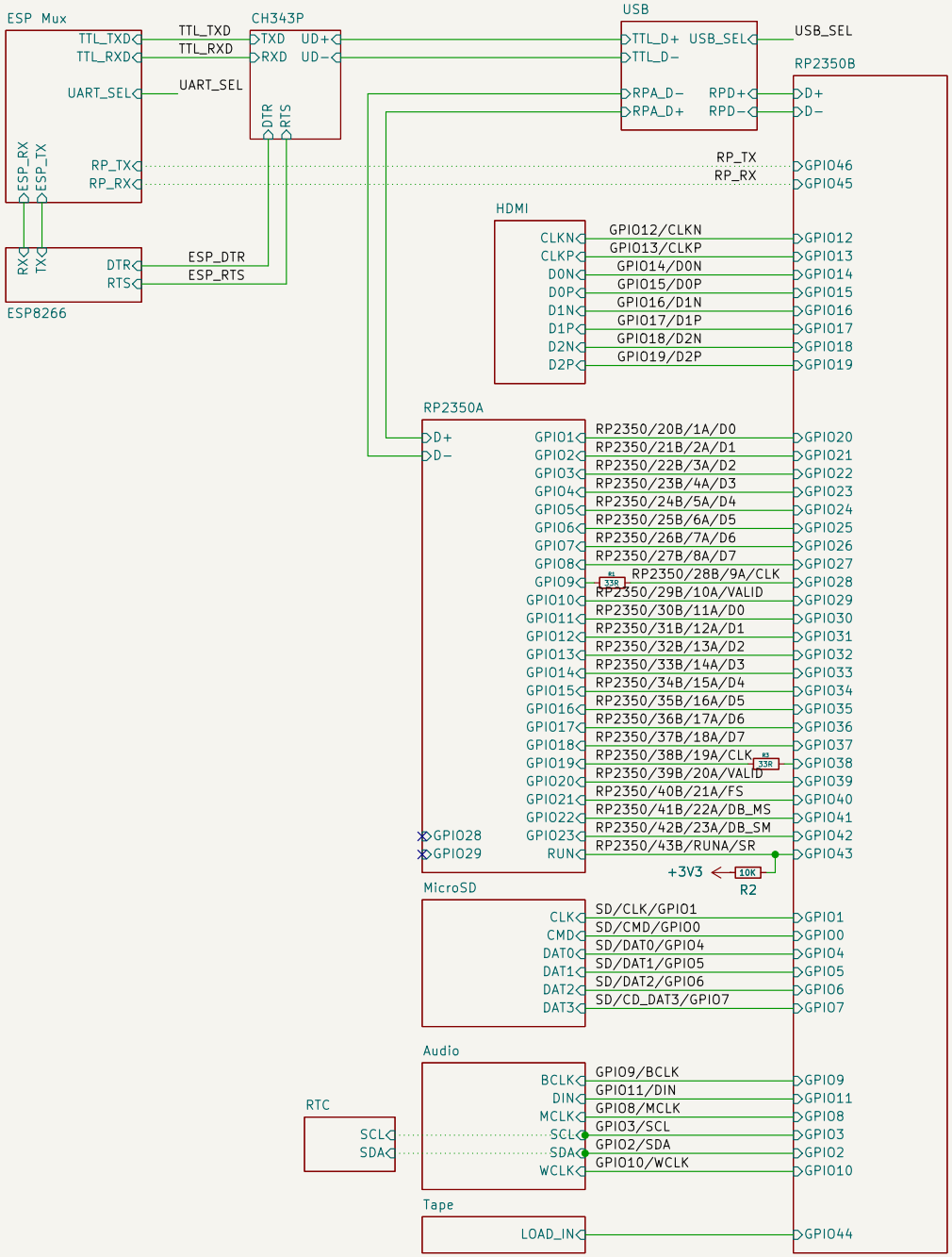

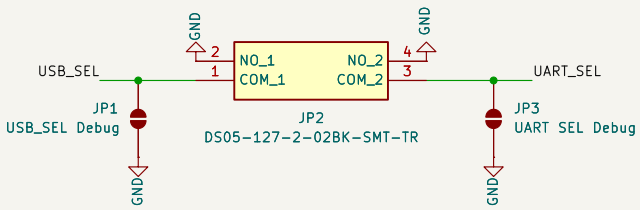

https://github.com/rh1tech/frank

Mikhail Matveev

Sheet: /

File: frank_next.kicad_sch

Title: FRANK Next

Size: A4	Date: 2026-08-31	**Rev: 1.00**
KiCad E.D.A. 10.0.1		Id: 1/15

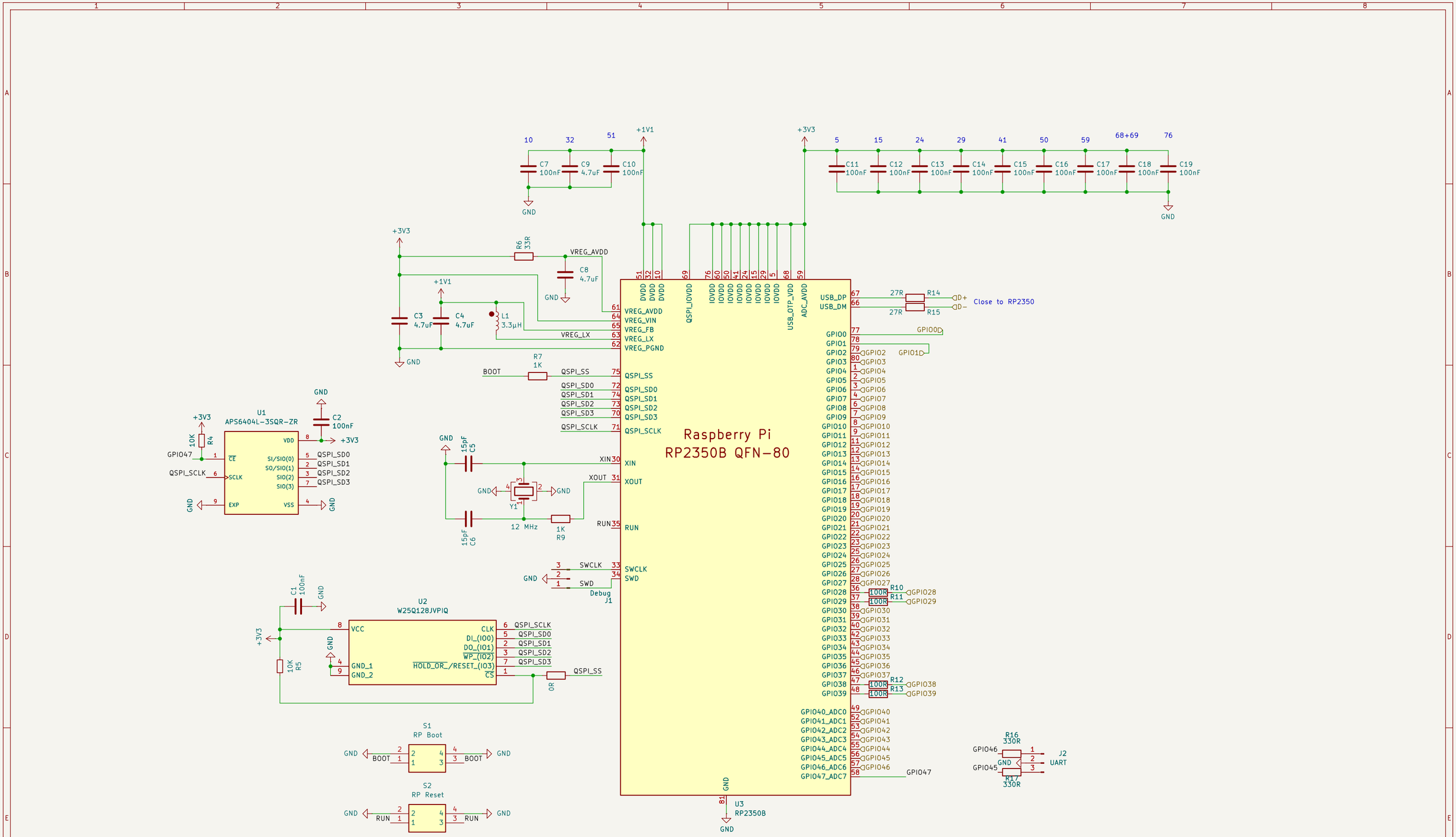

https://github.com/rh1tech/frank

Mikhail Matveev

Sheet: /RP2350B/
File: rp2350b.kicad_sch

Title: FRANK Next

Size: A3	Date: 2026-08-31	**Rev: 1.00**
KiCad E.D.A. 10.0.1		Id: 2/15

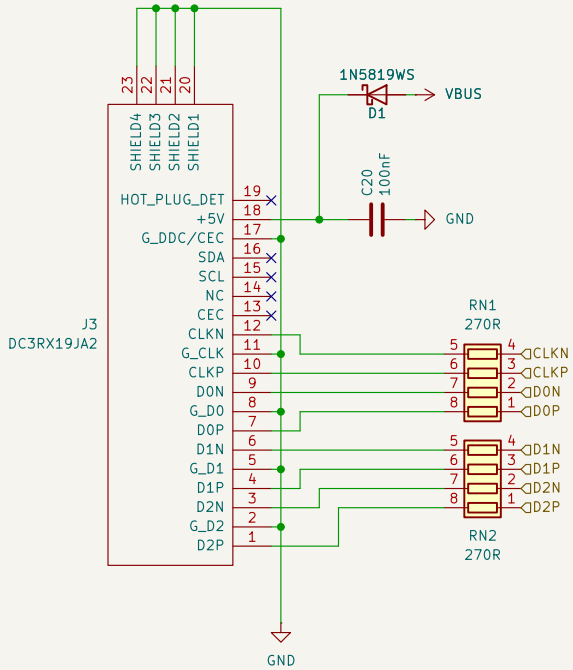

https://github.com/rh1tech/frank

Mikhail Matveev

Sheet: /HDMI/
File: hdmi.kicad_sch

Title: FRANK Next

Size: A4	Date: 2026-08-31	**Rev: 1.00**
KiCad E.D.A. 10.0.1		Id: 3/15

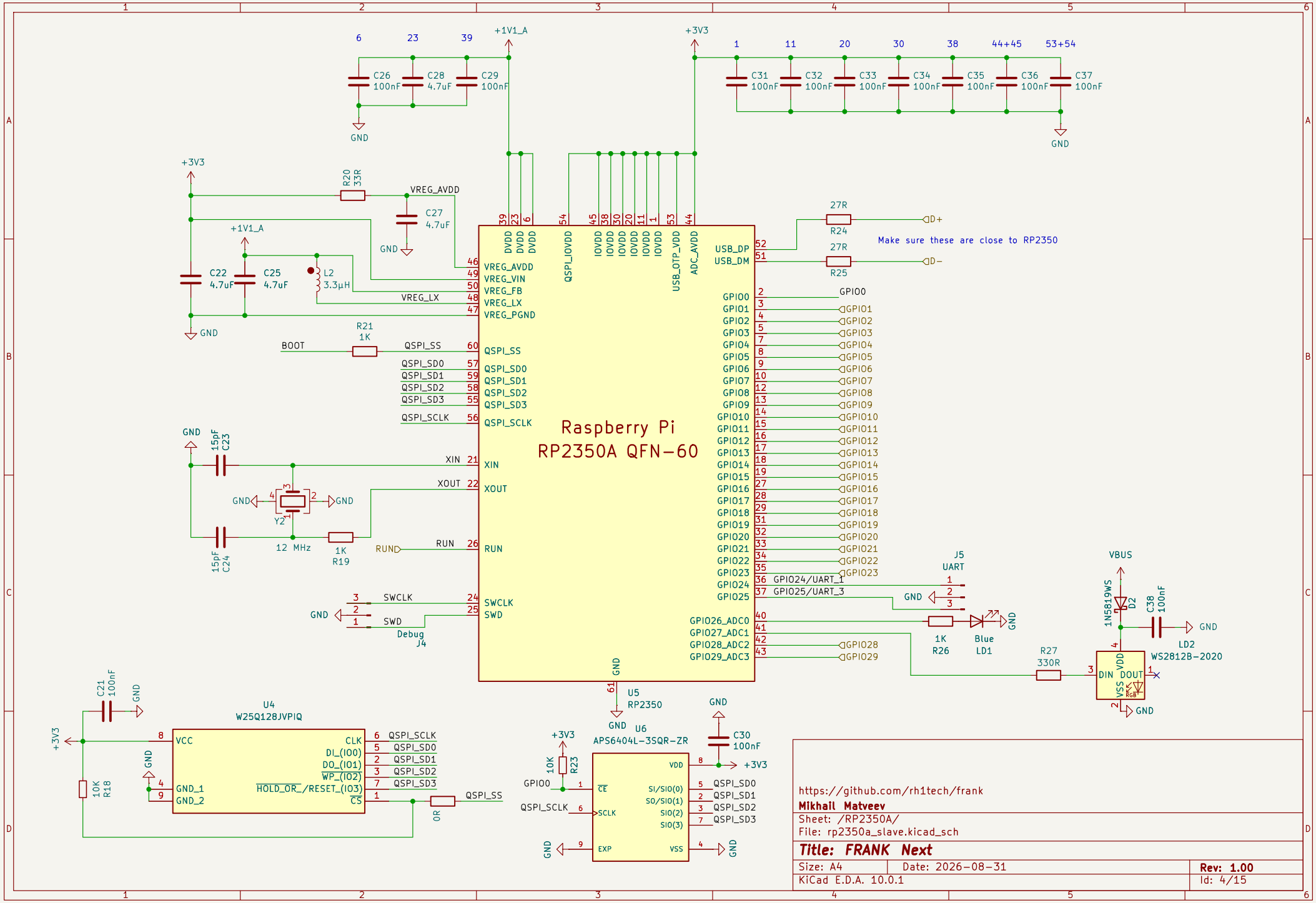
Raspberry Pi
RP2350A QFN-60
U5
RP2350
U4
W25Q128JVPIQ
U6
APS6404L-3SQR-ZR
J5
UART
Debug
J4
Make sure these are close to RP2350
https://github.com/rh1tech/frank
Mikhail Matveev
Sheet: /RP2350A/
File: rp2350a_slave.kicad_sch
Title: FRANK Next
Size: A4
Date: 2026-08-31
Rev: 1.00
KiCad E.D.A. 10.0.1
Id: 4/15

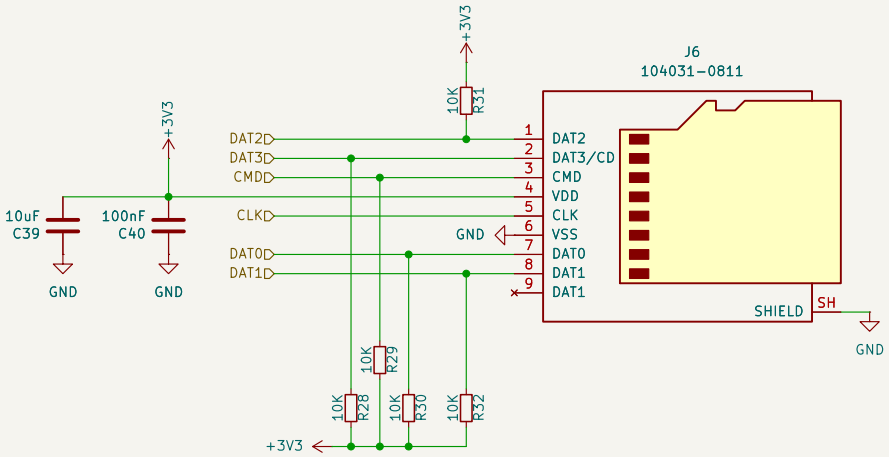

https://github.com/rh1tech/frank

Mikhail Matveev

Sheet: /MicroSD/
File: sd.kicad_sch

Title: FRANK Next

Size: A4	Date: 2026-08-31	**Rev: 1.00**
KiCad E.D.A. 10.0.1		Id: 5/15

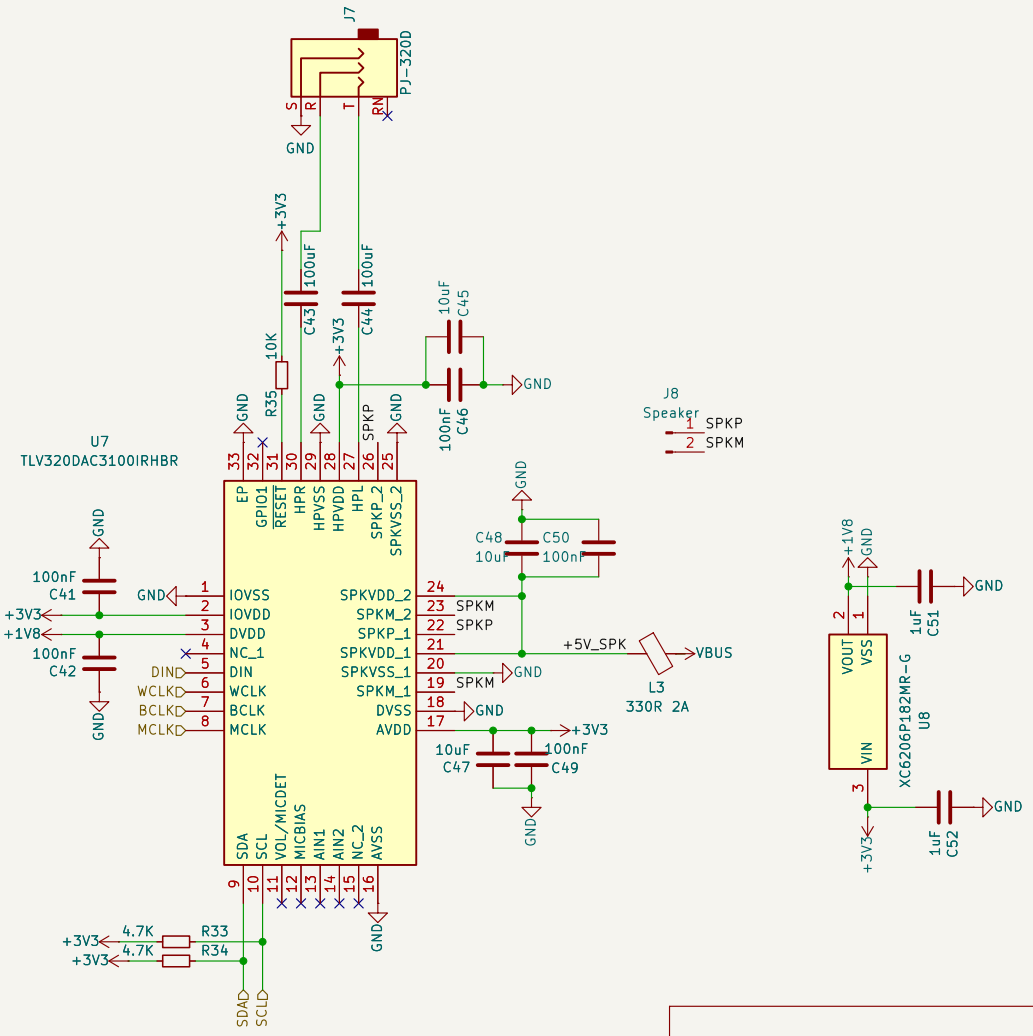

https://github.com/rh1tech/frank

Mikhail Matveev

Sheet: /Audio/

File: audio.kicad_sch

Title: FRANK Next

Size: A4	Date: 2026-08-31	**Rev: 1.00**
KiCad E.D.A. 10.0.1		Id: 6/15

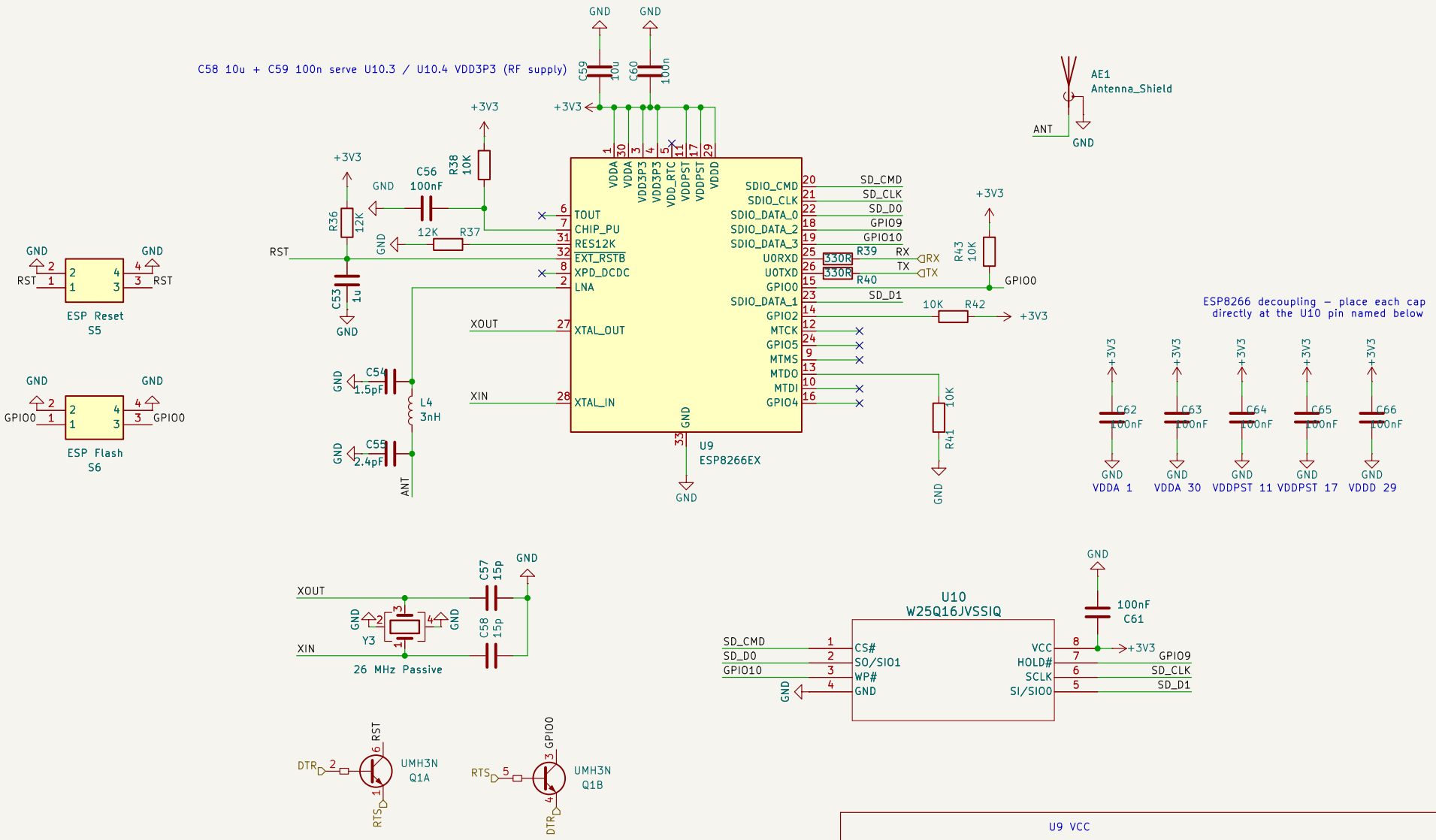

U9 VCC

https://github.com/rh1tech/frank

Mikhail Matveev

Sheet: /ESP8266/

File: esp8266.kicad_sch

Title: FRANK Next

Size: A4	Date: 2026-08-31	**Rev: 1.00**
KiCad E.D.A. 10.0.1		Id: 7/15

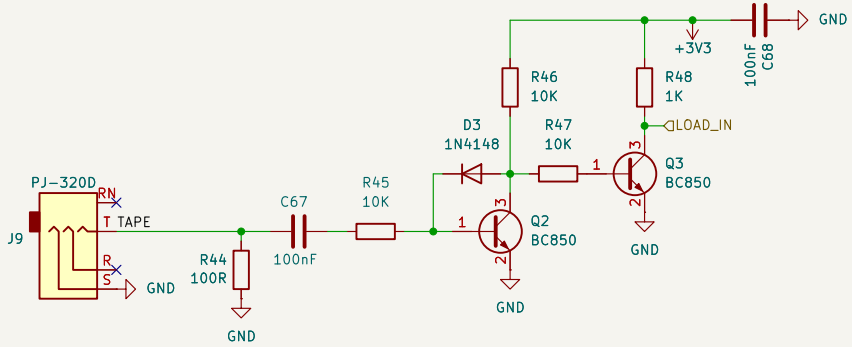

https://github.com/rh1tech/frank

Mikhail Matveev

Sheet: /Tape/
File: tape.kicad_sch

Title: FRANK Next

Size: A4	Date: 2026-08-31	**Rev: 1.00**
KiCad E.D.A. 10.0.1		Id: 8/15

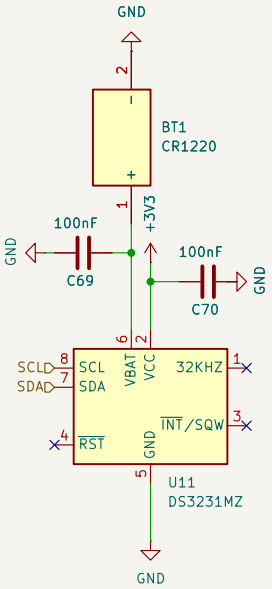

https://github.com/rh1tech/frank

Mikhail Matveev

Sheet: /RTC/
File: rtc.kicad_sch

Title: FRANK Next

Size: A4	Date: 2026-08-31	**Rev: 1.00**
KiCad E.D.A. 10.0.1		Id: 9/15

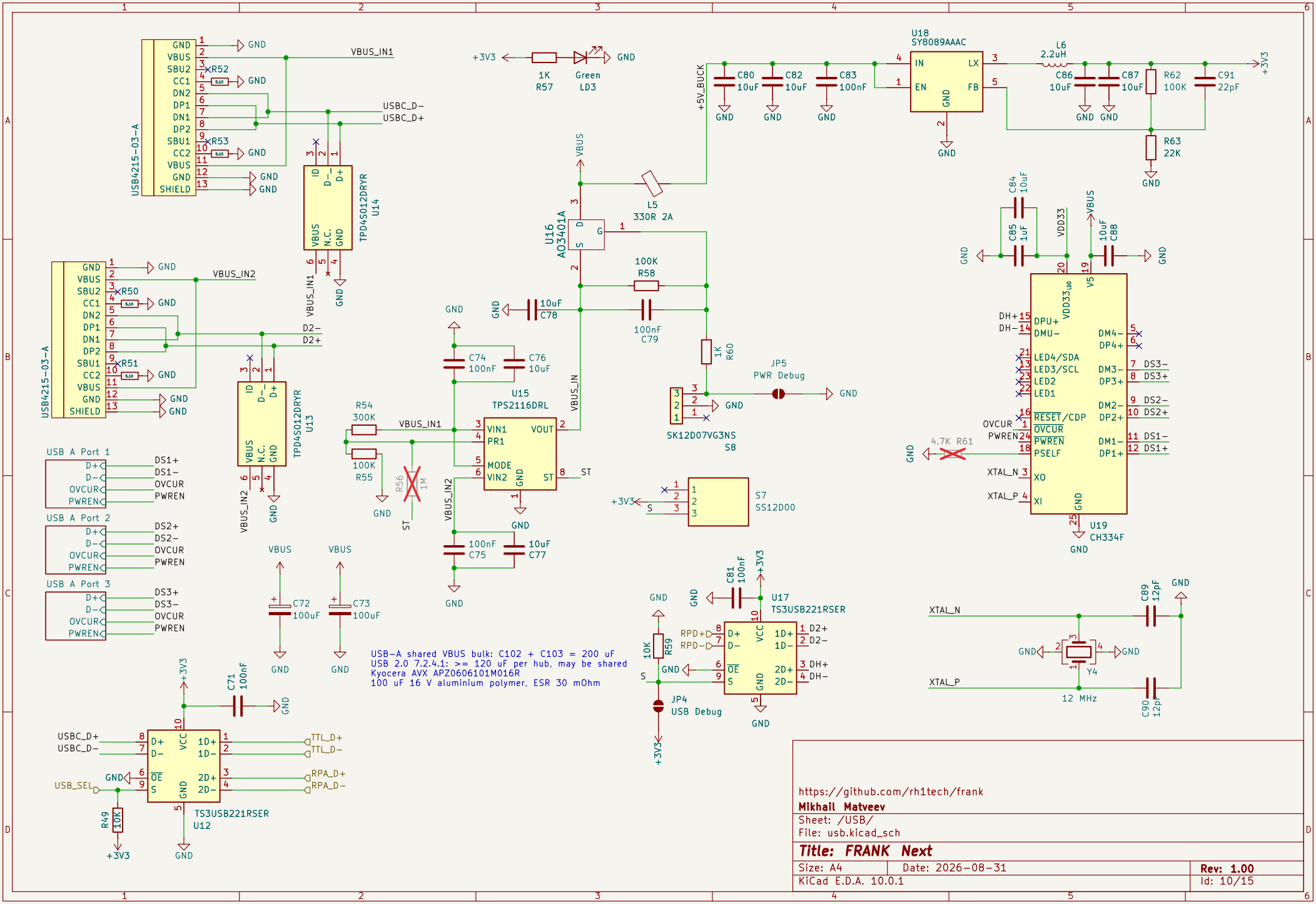
USB4215-03-A
VBUS_IN1
USBC_D-
USBC_D+
TPD4S012DRYR
U14
VBUS_IN2
D2-
D2+
TPD4S012DRYR
U13
USB A Port 1
DS1+
DS1-
OVCUR
PWREN
USB A Port 2
DS2+
DS2-
USB A Port 3
DS3+
DS3-
+3V3
1K
R57
Green
LD3
U18
SY8089AAAC
IN
LX
EN
FB
+5V_BUCK
L6
2.2uH
C80
10uF
C82
10uF
C83
100nF
C86
10uF
C87
10uF
R62
100K
C91
22pF
R63
22K
L5
330R 2A
U16
AO3401A
100K
R58
10uF
C78
100nF
C79
1K
R60
JP5
PWR Debug
SK12D07VG3NS
S8
S7
SS12D00
U15
TPS2116DRL
VIN1
PR1
VOUT
MODE
VIN2
ST
R54
300K
100K
R55
R56
1M
C74
100nF
C76
10uF
100nF
C75
10uF
C77
C72
100uF
C73
100uF
C84
10uF
C85
1uF
VDD33
10uF
C88
DPU+
DMU-
DH+
DH-
LED4/SDA
LED3/SCL
LED2
LED1
RESET/CDP
OVCUR
PWREN
PSELF
XO
XI
XTAL_N
XTAL_P
4.7K R61
U19
CH334F
C89
12pF
C90
12pF
Y4
12 MHz
U17
TS3USB221RSER
C81
100nF
RPD+
RPD-
R59
10K
JP4
USB Debug
C71
100nF
USBC_D+
USBC_D-
USB_SEL
TTL_D+
TTL_D-
RPA_D+
RPA_D-
R49
10K
TS3USB221RSER
U12
USB-A shared VBUS bulk: C102 + C103 = 200 uF
USB 2.0 7.2.4.1: >= 120 uF per hub, may be shared
Kyocera AVX APZ0606101M016R
100 uF 16 V aluminium polymer, ESR 30 mOhm
https://github.com/rh1tech/frank
Mikhail Matveev
Sheet: /USB/
File: usb.kicad_sch
Title: FRANK Next
Size: A4
Date: 2026-08-31
Rev: 1.00
KiCad E.D.A. 10.0.1
Id: 10/15

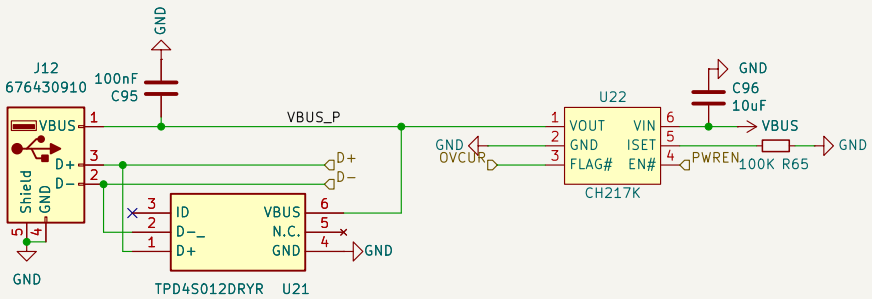

https://github.com/rh1tech/frank

Mikhail Matveev

Sheet: /USB/USB A Port 1/

File: usb_a_port.kicad_sch

Title: FRANK Next

Size: A4	Date: 2026-08-31	**Rev: 1.00**
KiCad E.D.A. 10.0.1		Id: 12/15

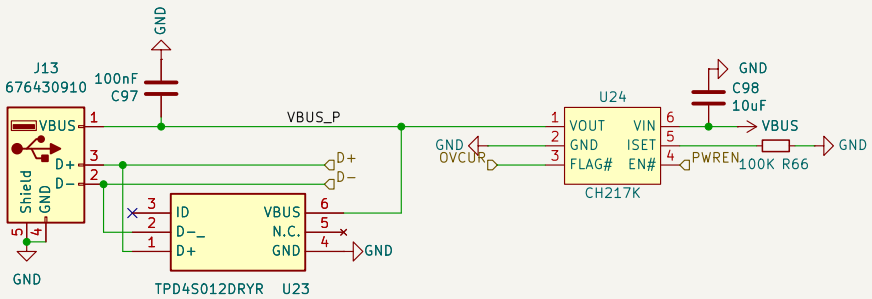

https://github.com/rh1tech/frank

Mikhail Matveev

Sheet: /USB/USB A Port 2/

File: usb_a_port.kicad_sch

Title: FRANK Next

Size: A4	Date: 2026-08-31	**Rev: 1.00**
KiCad E.D.A. 10.0.1		Id: 13/15

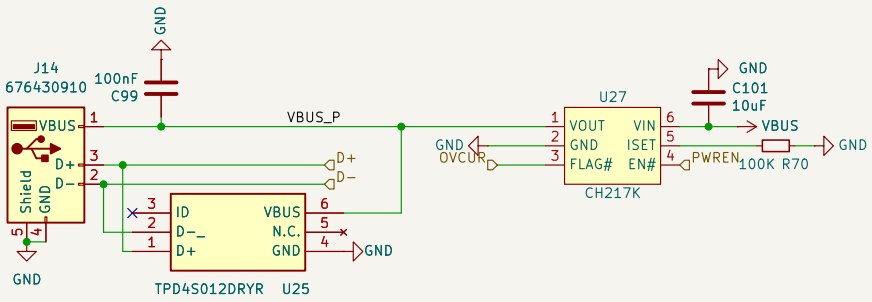

https://github.com/rh1tech/frank

Mikhail Matveev

Sheet: /USB/USB A Port 3/

File: usb_a_port.kicad_sch

Title: FRANK Next

Size: A4	Date: 2026-08-31	**Rev: 1.00**
KiCad E.D.A. 10.0.1		Id: 14/15

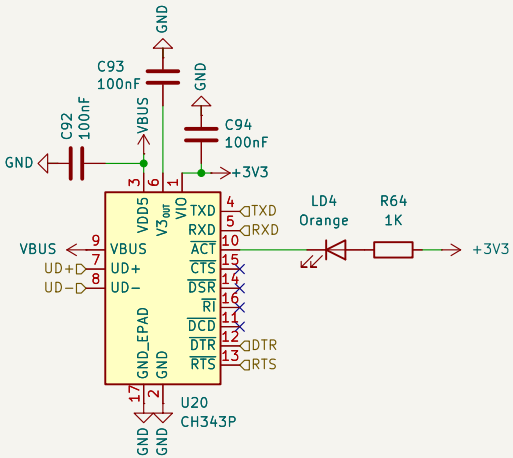

https://github.com/rh1tech/frank

Mikhail Matveev

Sheet: /CH343P/

File: ch343p.kicad_sch

Title: FRANK Next

Size: A4	Date: 2026-08-31	**Rev: 1.00**
KiCad E.D.A. 10.0.1		Id: 11/15

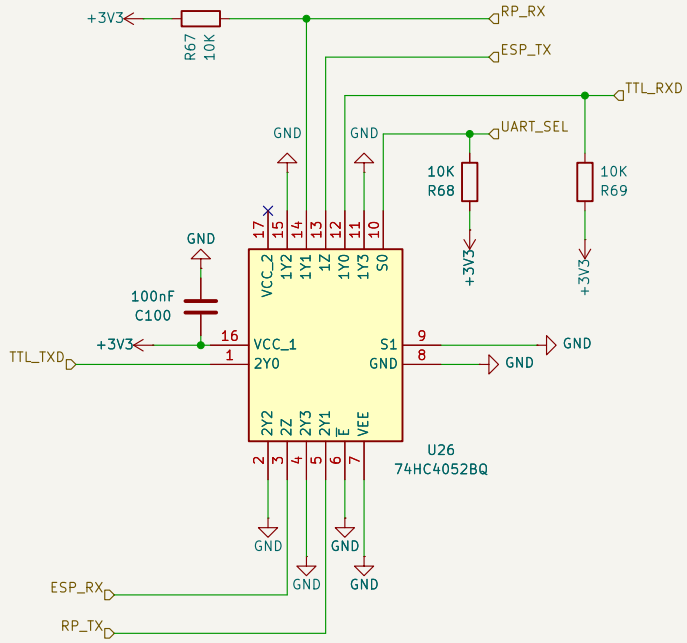

https://github.com/rh1tech/frank

Mikhail Matveev

Sheet: /ESP Mux/

File: esp_multiplex.kicad_sch

Title: FRANK Next

Size: A4	Date: 2026-08-31	**Rev: 1.00**
KiCad E.D.A. 10.0.1		Id: 14/15