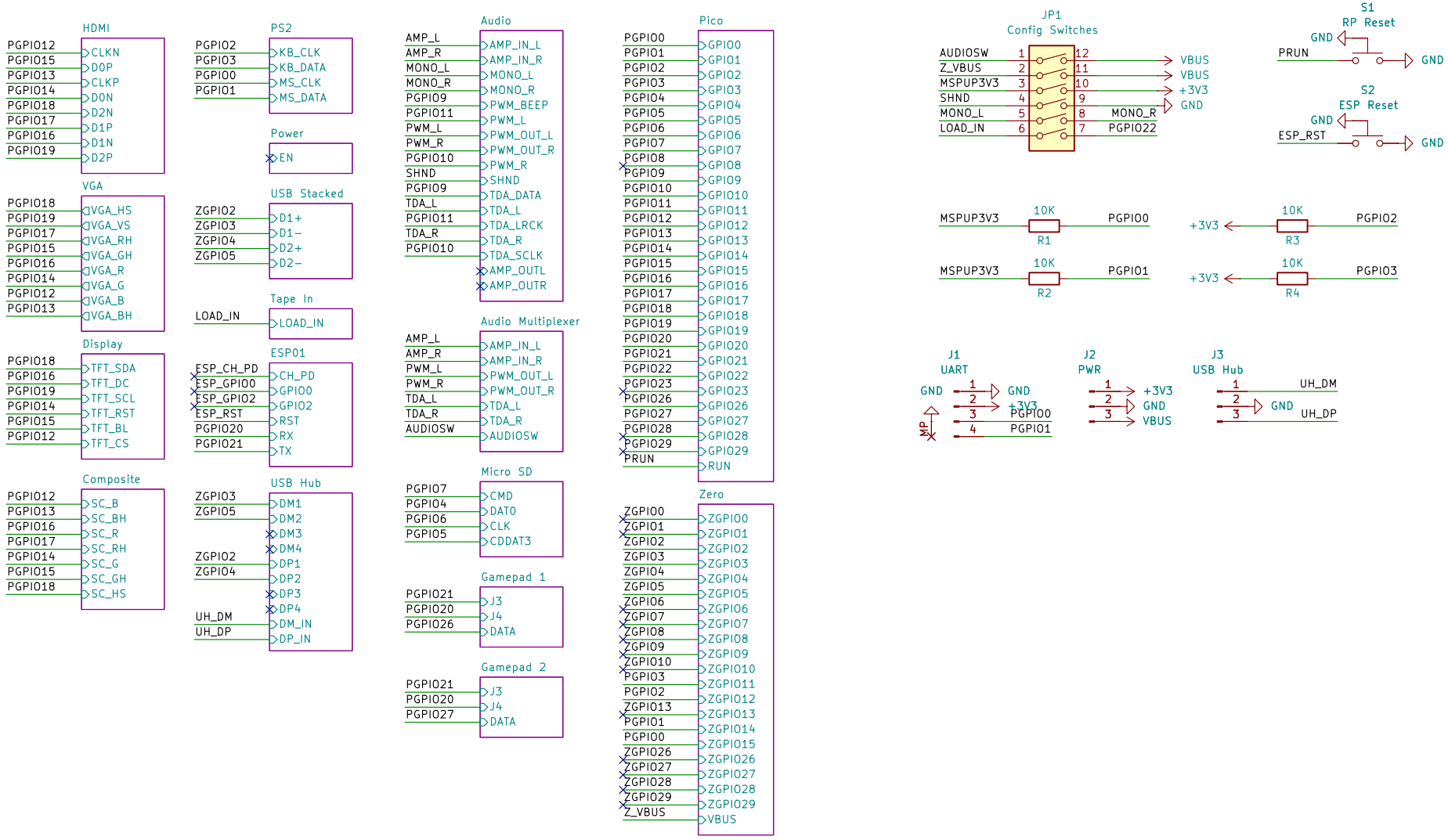

https://github.com/rh1tech/frank

Mikhail Matveev

Sheet: /

File: frank_m2.kicad_sch

Title: FRANK M2

Size: A4	Date: 2026-04-23	**Rev: 2.07**
KiCad E.D.A. 10.0.1		Id: 1/21

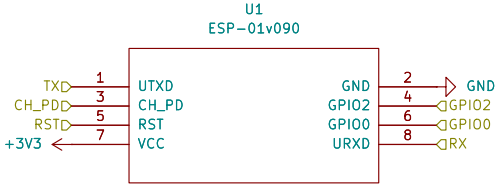

https://github.com/rh1tech/frank

Mikhail Matveev

Sheet: /ESP01/

File: esp01s.kicad_sch

Title: FRANK M2

Size: A4	Date: 2026-04-23	**Rev: 2.07**
KiCad E.D.A. 10.0.1		Id: 2/21

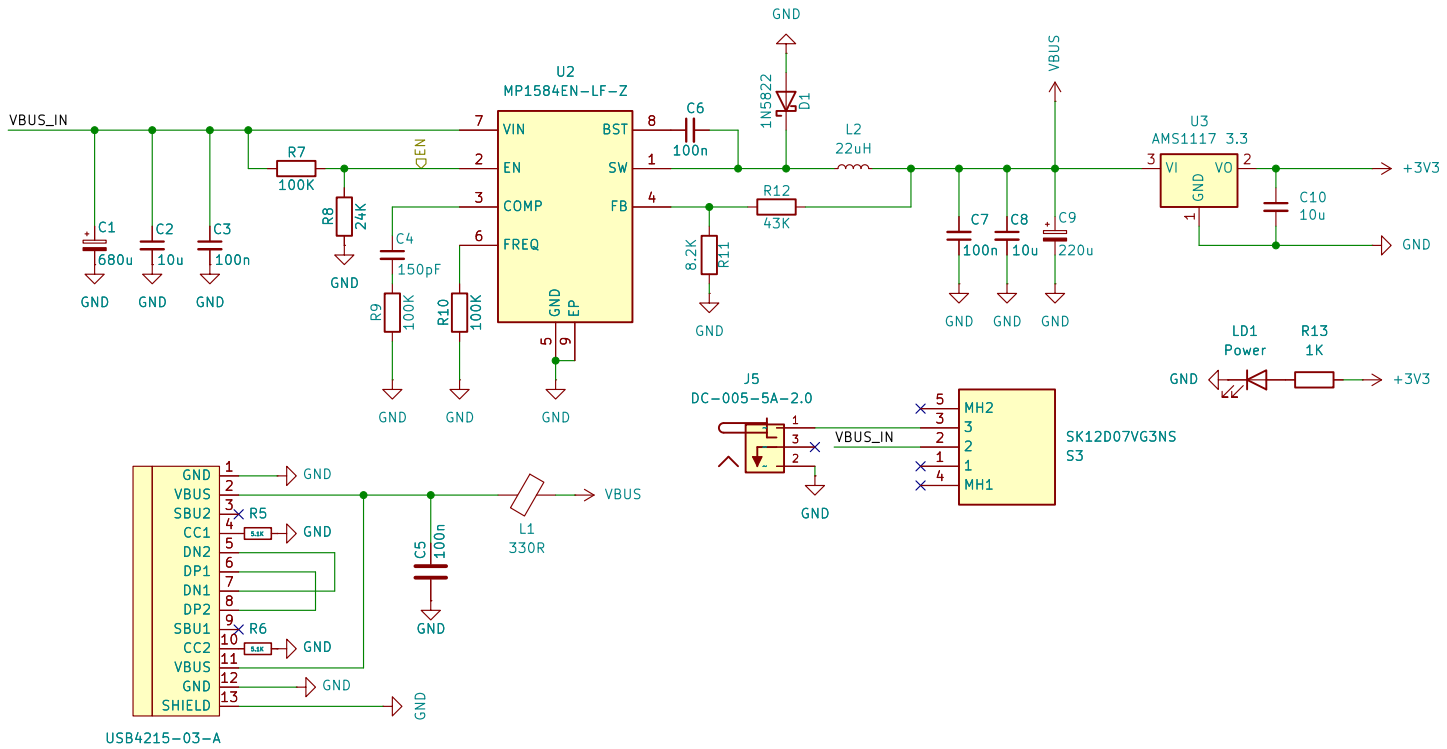

https://github.com/rh1tech/frank

Mikhail Matveev

Sheet: /Power/

File: power.kicad_sch

Title: FRANK M2

Size: A4	Date: 2026-04-23	**Rev: 2.07**
KiCad E.D.A. 10.0.1		Id: 3/21

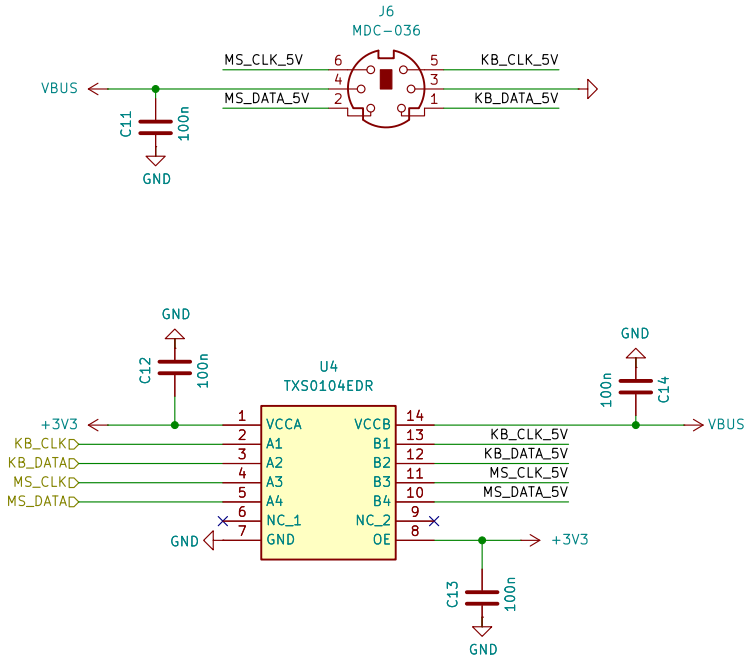

https://github.com/rh1tech/frank

Mikhail Matveev

Sheet: /PS2/

File: ps2.kicad_sch

Title: FRANK M2

Size: A4	Date: 2026-04-23	**Rev: 2.07**
KiCad E.D.A. 10.0.1		Id: 4/21

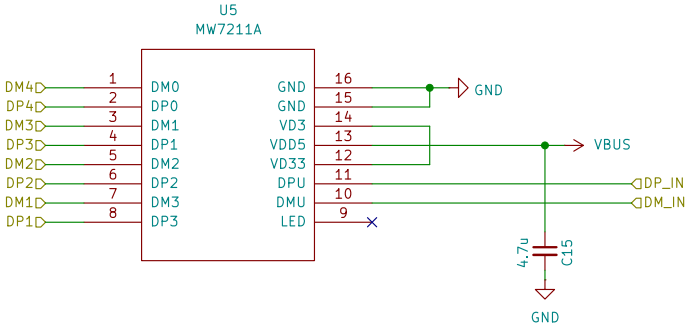

https://github.com/rh1tech/frank

Mikhail Matveev

Sheet: /USB Hub/
File: usb_hub.kicad_sch

Title: FRANK M2

Size: A4	Date: 2026-04-23	**Rev: 2.07**
KiCad E.D.A. 10.0.1		Id: 5/21

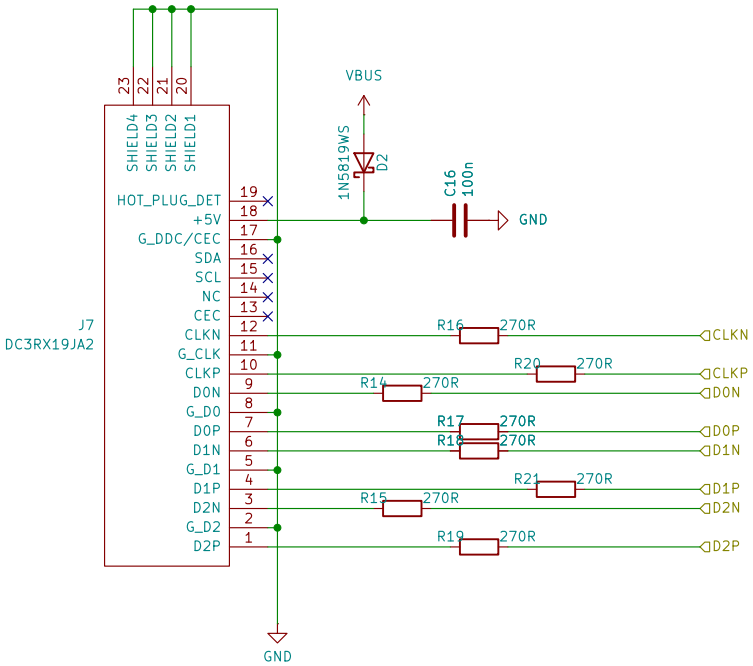

https://github.com/rh1tech/frank

Mikhail Matveev

Sheet: /HDMI/
File: hdmi.kicad_sch

Title: FRANK M2

Size: A4	Date: 2026-04-23	**Rev: 2.07**
KiCad E.D.A. 10.0.1		Id: 10/21

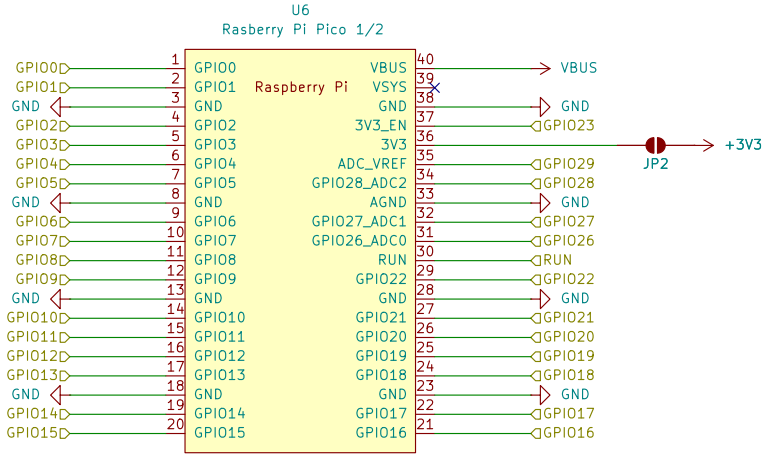

https://github.com/rh1tech/frank

Mikhail Matveev

Sheet: /Pico/
File: pico.kicad_sch

Title: FRANK M2

Size: A4	Date: 2026-04-23	**Rev: 2.07**
KiCad E.D.A. 10.0.1		Id: 12/21

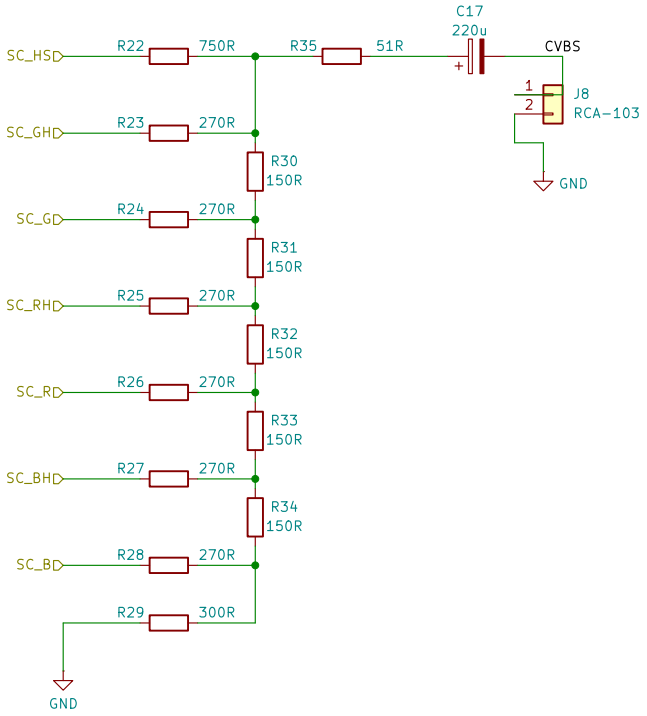

https://github.com/rh1tech/frank

Mikhail Matveev

Sheet: /Composite/

File: composite.kicad_sch

Title: FRANK M2

Size: A4	Date: 2026-04-23	**Rev: 2.07**
KiCad E.D.A. 10.0.1		Id: 35/21

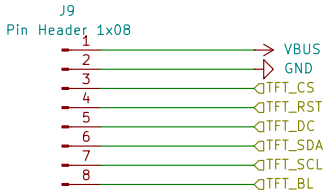

https://github.com/rh1tech/frank

Mikhail Matveev

Sheet: /Display/
File: display.kicad_sch

Title: FRANK M2

Size: A4	Date: 2026-04-23	**Rev: 2.07**
KiCad E.D.A. 10.0.1		Id: 36/21

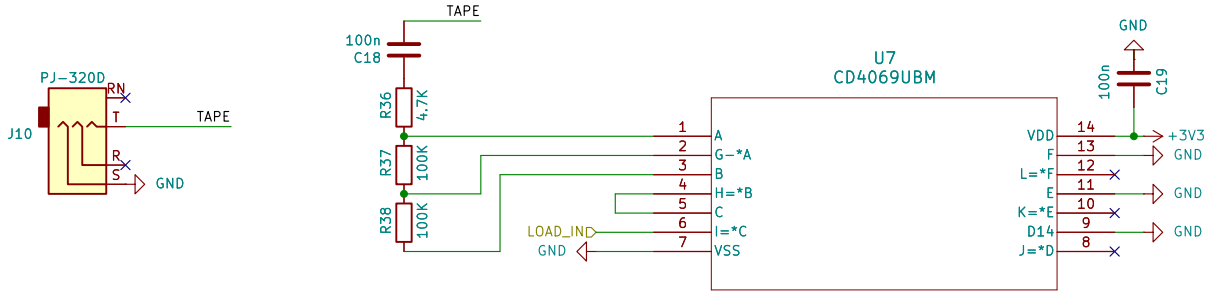

https://github.com/rh1tech/frank

Mikhail Matveev

Sheet: /Tape In/
File: tape.kicad_sch

Title: FRANK M2

Size: A4	Date: 2026-04-23	**Rev: 2.07**
KiCad E.D.A. 10.0.1		Id: 39/21

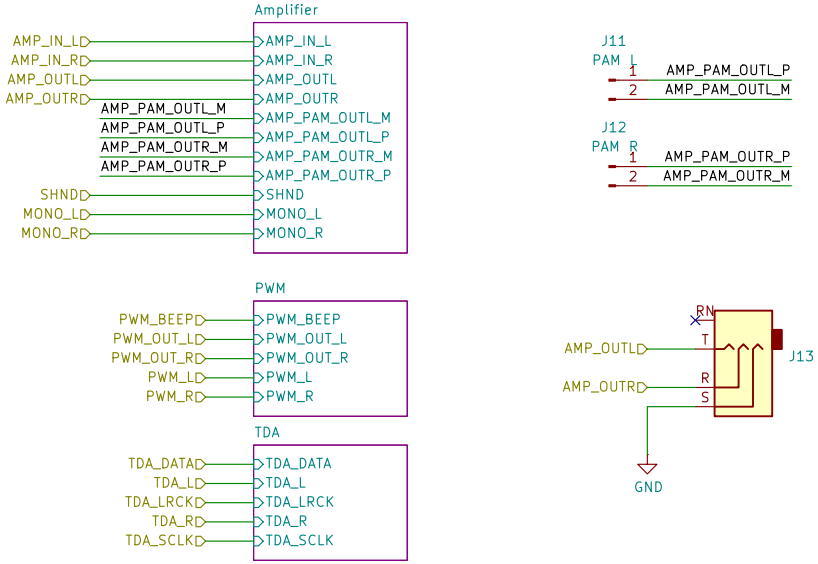

https://github.com/rh1tech/frank

Mikhail Matveev

Sheet: /Audio/
File: audio.kicad_sch

Title: FRANK M2

Size: A4	Date: 2026-04-23	**Rev: 2.07**
KiCad E.D.A. 10.0.1		Id: 41/21

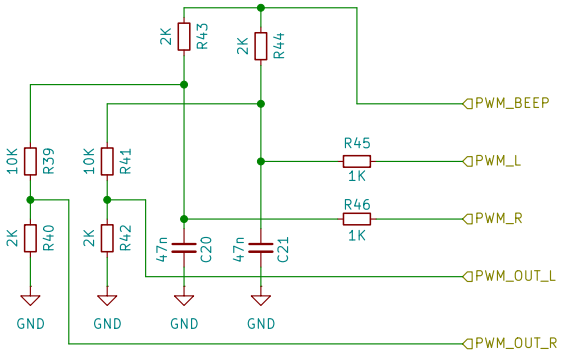

https://github.com/rh1tech/frank

Mikhail Matveev

Sheet: /Audio/PWM/
File: pwm.kicad_sch

Title: FRANK M2

Size: A4	Date: 2026-04-23	**Rev: 2.07**
KiCad E.D.A. 10.0.1		Id: 42/21

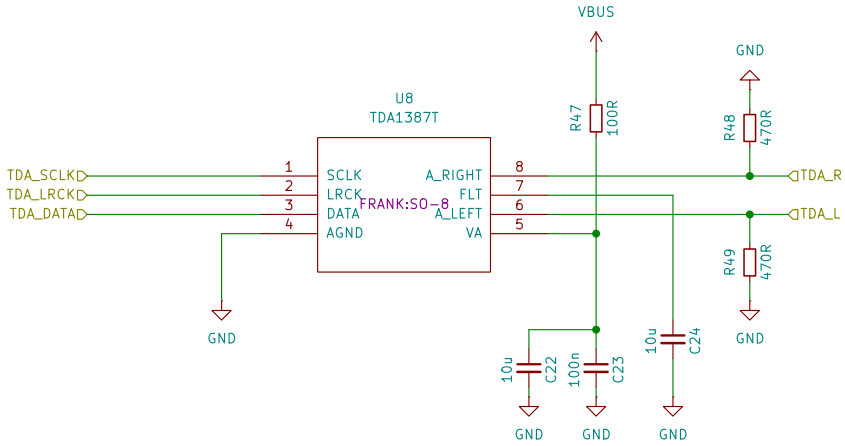

https://github.com/rh1tech/frank

Mikhail Matveev

Sheet: /Audio/TDA/
File: tda.kicad_sch

Title: FRANK M2

Size: A4	Date: 2026-04-23	**Rev: 2.07**
KiCad E.D.A. 10.0.1		Id: 43/21

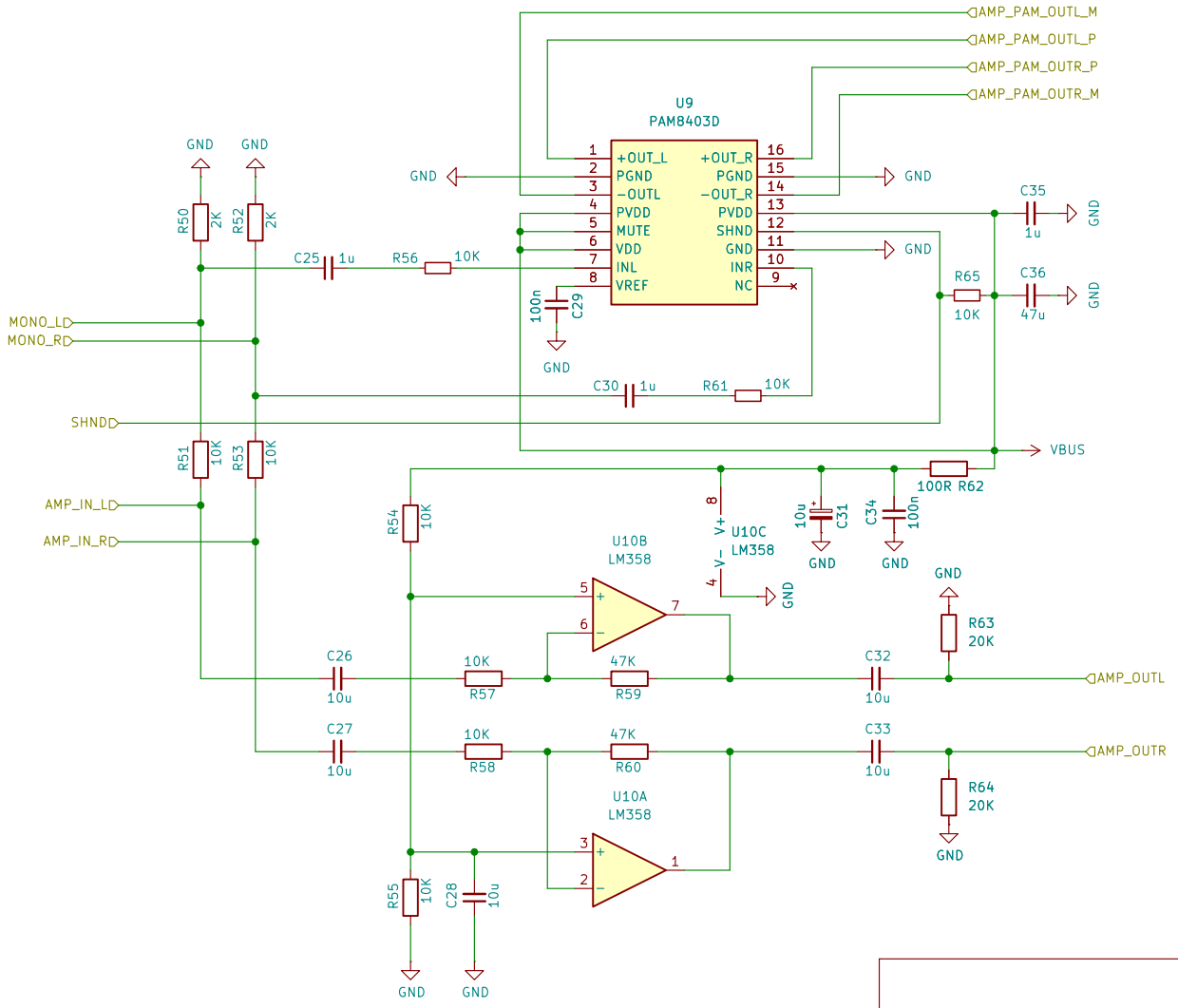

https://github.com/rh1tech/frank

Mikhail Matveev

Sheet: /Audio/Amplifier/

File: amp.kicad_sch

Title: FRANK M2

Size: A4	Date: 2026-04-23	**Rev: 2.07**
KiCad E.D.A. 10.0.1		Id: 44/21

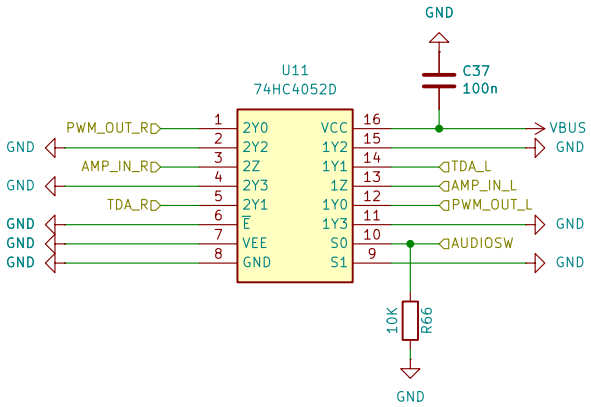

https://github.com/rh1tech/frank

Mikhail Matveev

Sheet: /Audio Multiplexer/

File: audio_multiplexer.kicad_sch

Title: FRANK M2

Size: A4	Date: 2026-04-23	**Rev: 2.07**
KiCad E.D.A. 10.0.1		Id: 45/21

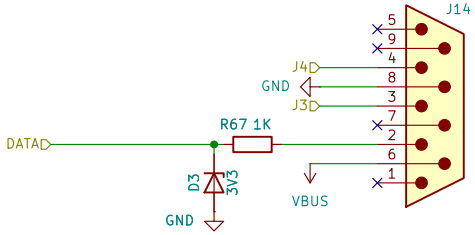

https://github.com/rh1tech/frank

Mikhail Matveev

Sheet: /Gamepad 1/

File: gamepad.kicad_sch

Title: FRANK M2

Size: A4	Date: 2026-04-23	**Rev: 2.07**
KiCad E.D.A. 10.0.1		Id: 46/21

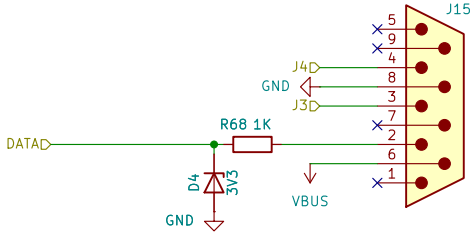

https://github.com/rh1tech/frank

Mikhail Matveev

Sheet: /Gamepad 2/

File: gamepad.kicad_sch

Title: FRANK M2

Size: A4	Date: 2026-04-23	**Rev: 2.07**
KiCad E.D.A. 10.0.1		Id: 48/21

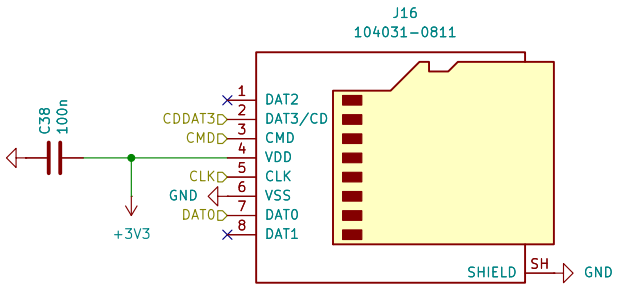

https://github.com/rh1tech/frank

Mikhail Matveev

Sheet: /Micro SD/
File: sd.kicad_sch

Title: FRANK M2

Size: A4	Date: 2026-04-23	**Rev: 2.07**
KiCad E.D.A. 10.0.1		Id: 49/21

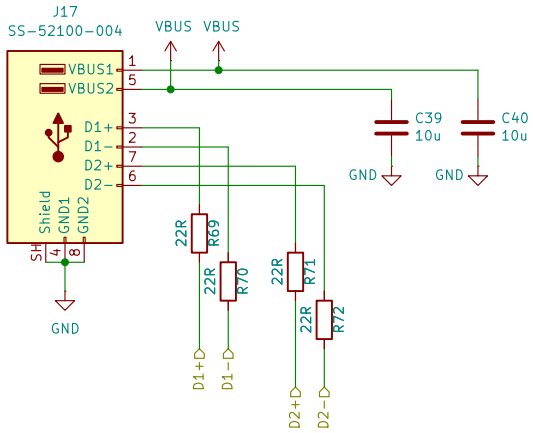

https://github.com/rh1tech/frank

Mikhail Matveev

Sheet: /USB Stacked/

File: usbstack.kicad_sch

Title: FRANK M2

Size: A4	Date: 2026-04-23	**Rev: 2.07**
KiCad E.D.A. 10.0.1		Id: 51/21

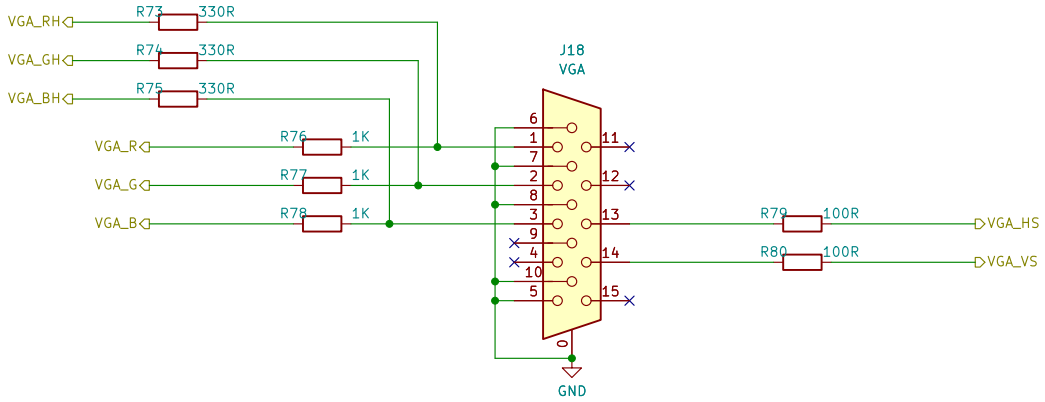

https://github.com/rh1tech/frank

Mikhail Matveev

Sheet: /VGA/

File: vga.kicad_sch

Title: FRANK M2

Size: A4	Date: 2026-04-23	**Rev: 2.07**
KiCad E.D.A. 10.0.1		Id: 52/21

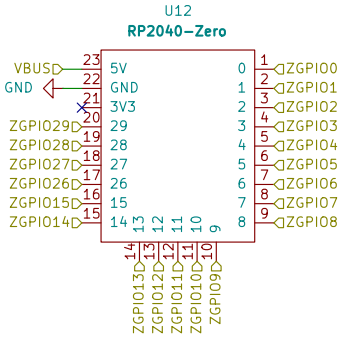

https://github.com/rh1tech/frank

Mikhail Matveev

Sheet: /Zero/
File: zero.kicad_sch

Title: FRANK M2

Size: A4	Date: 2026-04-23	**Rev: 2.07**
KiCad E.D.A. 10.0.1		Id: 53/21