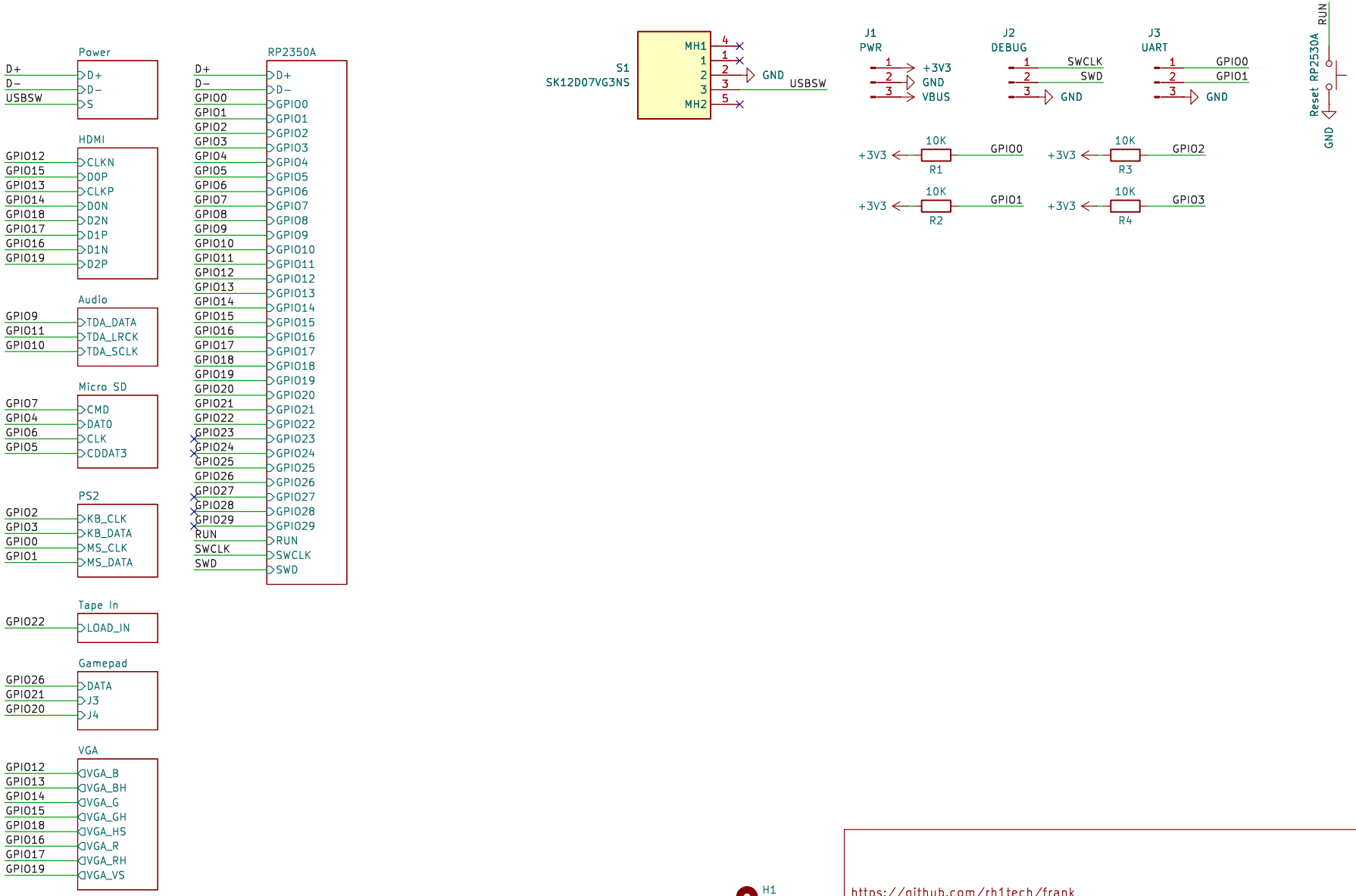

https://github.com/rh1tech/frank

Mikhail Matveev

Sheet: /

File: minifrank_rm2p2.kicad_sch

Title: MiniFRANK RM2P2

Size: A4	Date: 2026-03-13	**Rev: 1.03**
KiCad E.D.A. 9.0.7		Id: 1/12

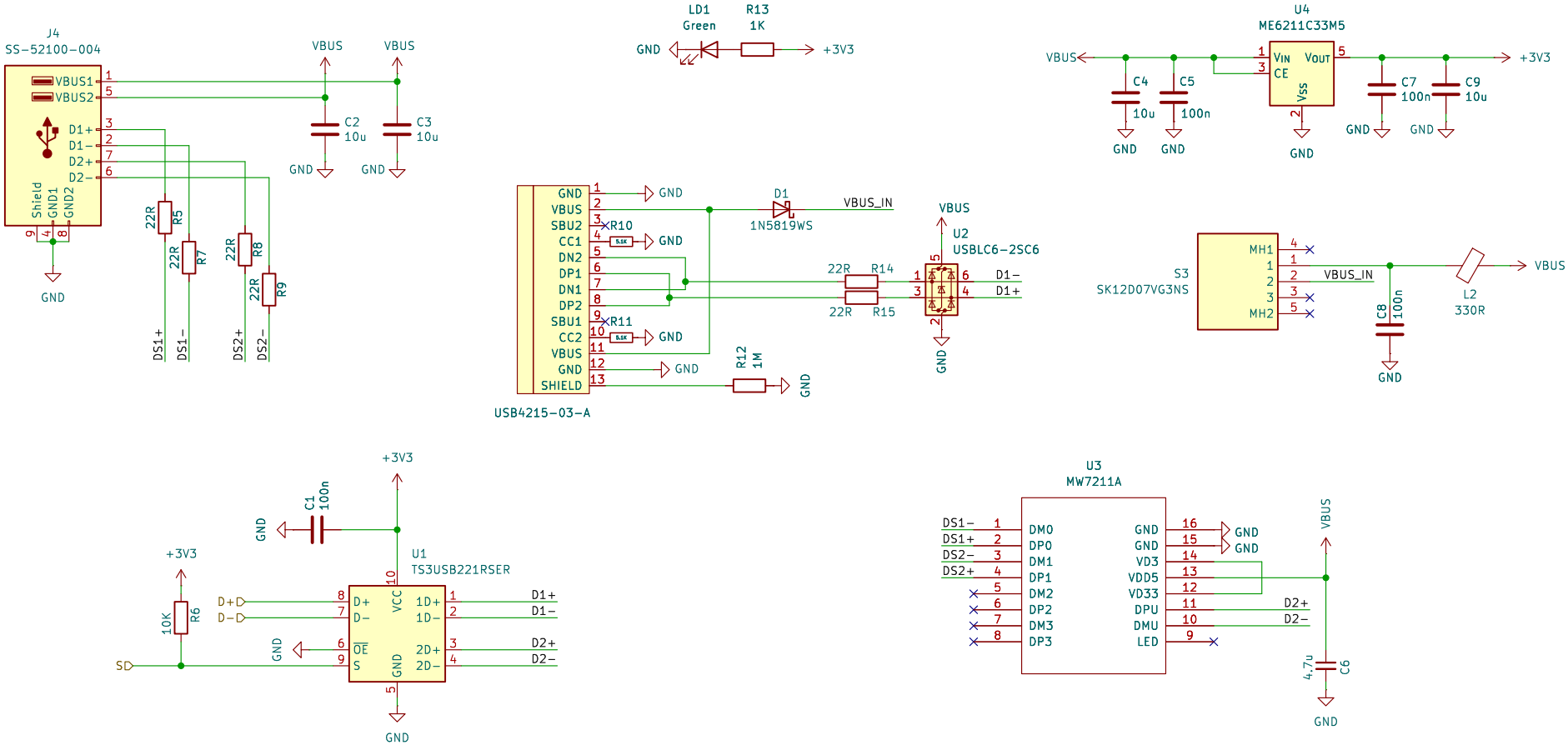

https://github.com/rh1tech/frank

Mikhail Matveev

Sheet: /Power/

File: power.kicad_sch

Title: MiniFRANK RM2P2

Size: A4	Date: 2026-03-13	**Rev: 1.03**
KiCad E.D.A. 9.0.7		Id: 3/12

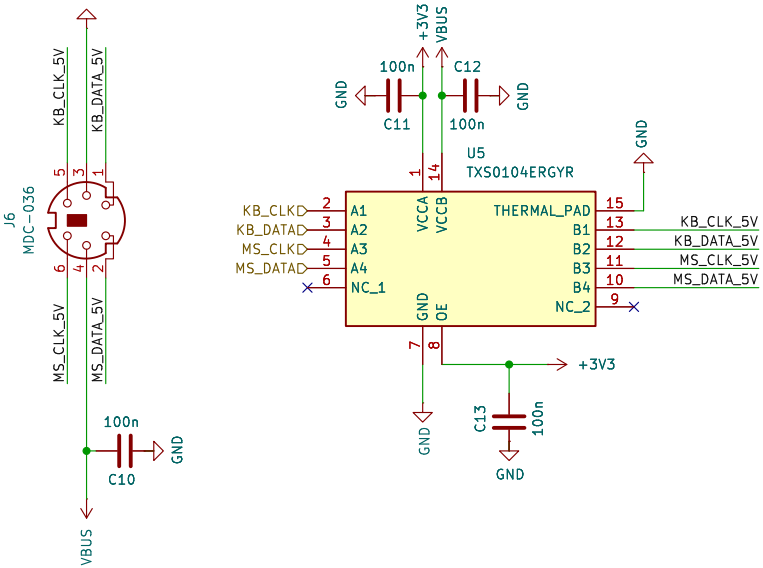

https://github.com/rh1tech/frank

Mikhail Matveev

Sheet: /PS2/

File: ps2.kicad_sch

Title: MiniFRANK RM2P2

Size: A4	Date: 2026-03-13	**Rev: 1.03**
KiCad E.D.A. 9.0.7		Id: 9/12

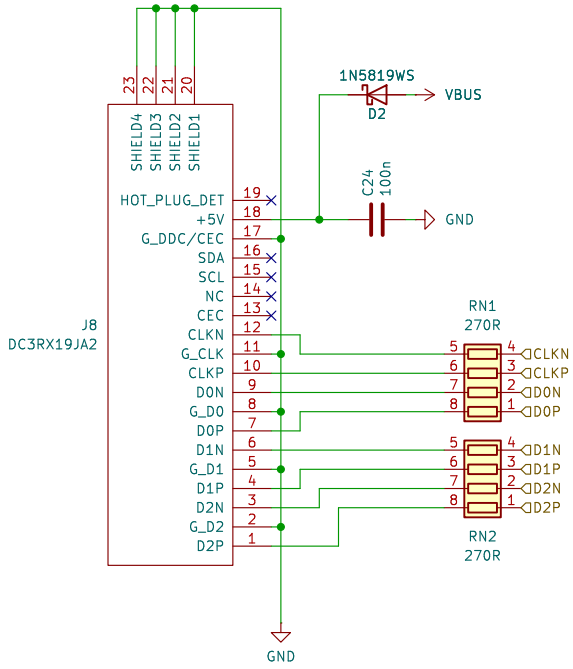

https://github.com/rh1tech/frank

Mikhail Matveev

Sheet: /HDMI/

File: hdmi.kicad_sch

Title: MiniFRANK RM2P2

Size: A4	Date: 2026-03-13	**Rev: 1.03**
KiCad E.D.A. 9.0.7		Id: 10/12

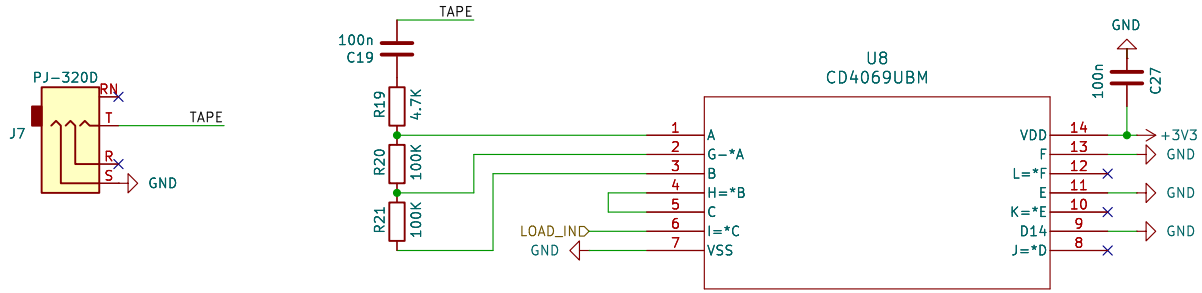

https://github.com/rh1tech/frank

Mikhail Matveev

Sheet: /Tape In/
File: tape.kicad_sch

Title: MiniFRANK RM2P2

Size: A4	Date: 2026-03-13	**Rev: 1.03**
KiCad E.D.A. 9.0.7		Id: 10/12

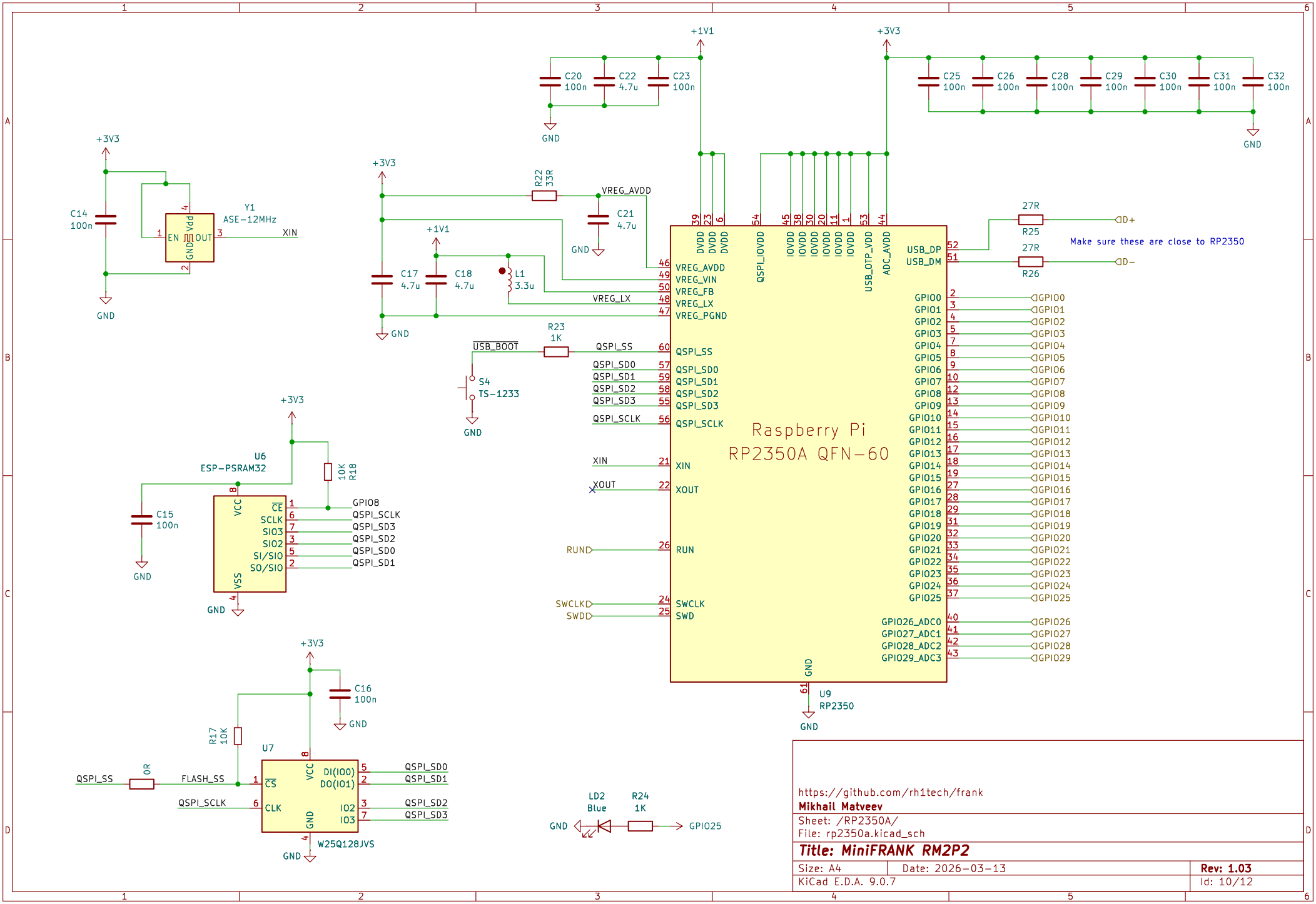
Raspberry Pi
RP2350A QFN-60
U9
RP2350
Y1
ASE-12MHz
XIN
C14
100n
+3V3
GND
+1V1
C20
100n
C22
4.7u
C23
100n
C25
100n
C26
100n
C28
100n
C29
100n
C30
100n
C31
100n
C32
100n
R22
33R
VREG_AVDD
C21
4.7u
C17
4.7u
C18
4.7u
L1
3.3u
VREG_LX
R23
1K
USB_BOOT
S4
TS-1233
QSPI_SS
QSPI_SD0
QSPI_SD1
QSPI_SD2
QSPI_SD3
QSPI_SCLK
XOUT
RUN
SWCLK
SWD
27R
R25
R26
D+
D-
Make sure these are close to RP2350
GPIO0
GPIO1
GPIO2
GPIO3
GPIO4
GPIO5
GPIO6
GPIO7
GPIO8
GPIO9
GPIO10
GPIO11
GPIO12
GPIO13
GPIO14
GPIO15
GPIO16
GPIO17
GPIO18
GPIO19
GPIO20
GPIO21
GPIO22
GPIO23
GPIO24
GPIO25
GPIO26_ADC0
GPIO27_ADC1
GPIO28_ADC2
GPIO29_ADC3
U6
ESP-PSRAM32
C15
100n
10K
R18
CE
SCLK
SIO3
SIO2
SI/SIO0
SO/SIO1
VCC
VSS
U7
W25Q128JVS
C16
100n
R17
10K
0R
FLASH_SS
DI(IO0)
DO(IO1)
IO2
IO3
CS
CLK
LD2
Blue
R24
1K
https://github.com/rh1tech/frank
Mikhail Matveev
Sheet: /RP2350A/
File: rp2350a.kicad_sch
Title: MiniFRANK RM2P2
Size: A4
Date: 2026-03-13
Rev: 1.03
KiCad E.D.A. 9.0.7
Id: 10/12

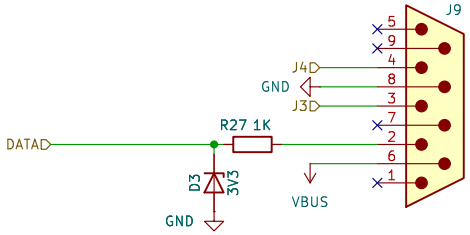

https://github.com/rh1tech/frank

Mikhail Matveev

Sheet: /Gamepad/
File: gamepad.kicad_sch

Title: MiniFRANK RM2P2

Size: A4	Date: 2026-03-13	**Rev: 1.03**
KiCad E.D.A. 9.0.7		Id: 11/12

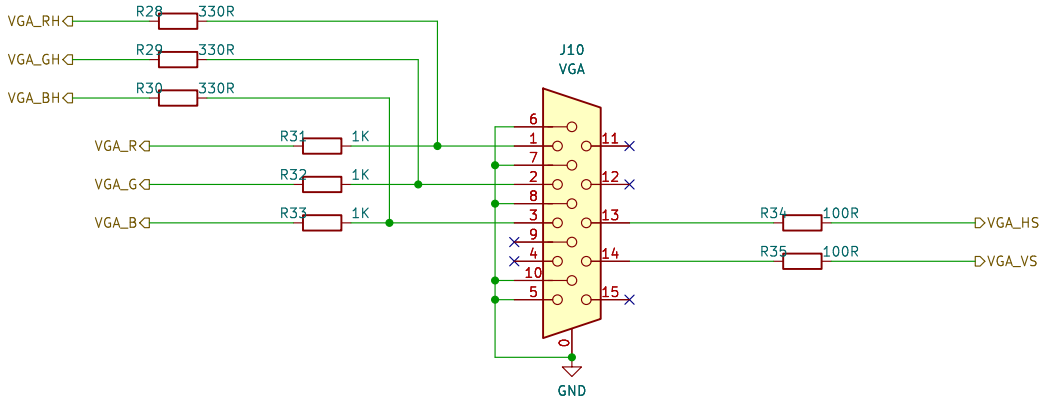

https://github.com/rh1tech/frank

Mikhail Matveev

Sheet: /VGA/

File: vga.kicad_sch

Title: MiniFRANK RM2P2

Size: A4	Date: 2026-03-13	**Rev: 1.03**
KiCad E.D.A. 9.0.7		Id: 12/12

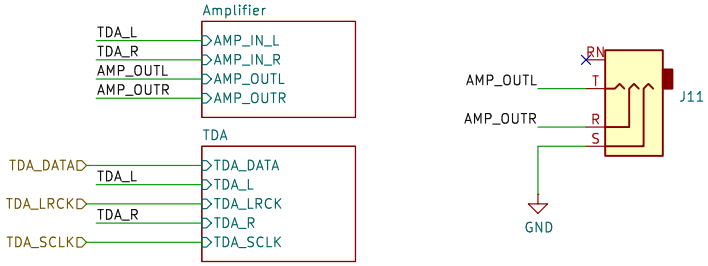

https://github.com/rh1tech/frank

Mikhail Matveev

Sheet: /Audio/

File: audio.kicad_sch

Title: MiniFRANK RM2P2

Size: A4	Date: 2026-03-13	**Rev: 1.03**
KiCad E.D.A. 9.0.7		Id: 41/12

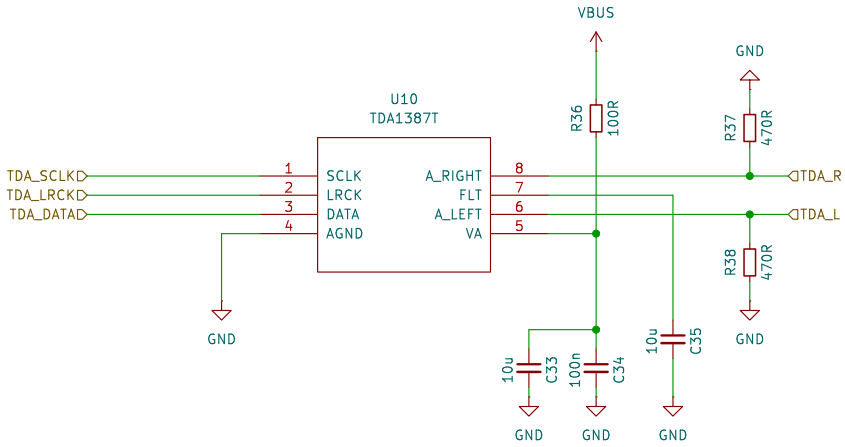

https://github.com/rh1tech/frank

Mikhail Matveev

Sheet: /Audio/TDA/

File: tda.kicad_sch

Title: MiniFRANK RM2P2

Size: A4	Date: 2026-03-13	**Rev: 1.03**
KiCad E.D.A. 9.0.7		Id: 43/12

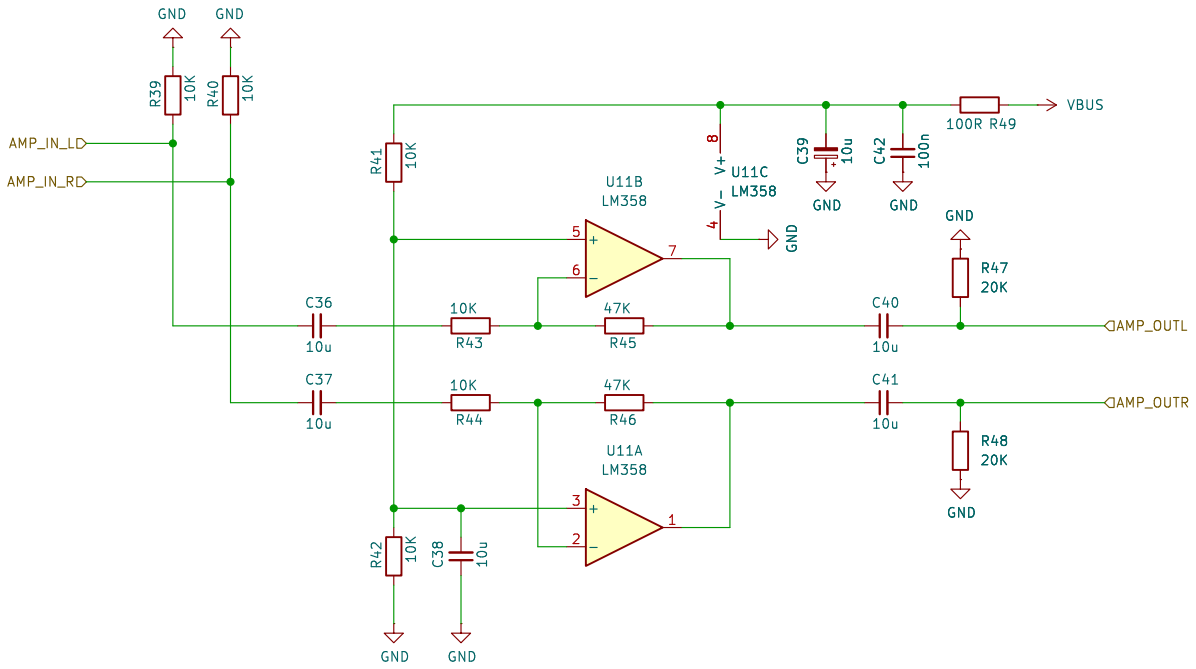

https://github.com/rh1tech/frank

Mikhail Matveev

Sheet: /Audio/Amplifier/

File: amp.kicad_sch

Title: MiniFRANK RM2P2

Size: A4	Date: 2026-03-13	**Rev: 1.03**
KiCad E.D.A. 9.0.7		Id: 44/12

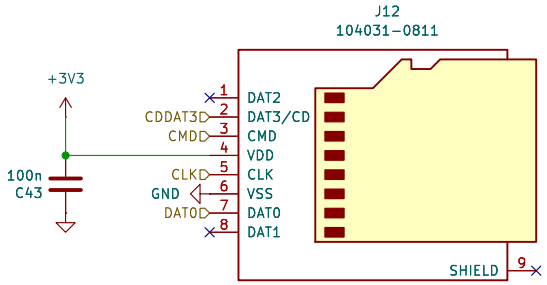

https://github.com/rh1tech/frank

Mikhail Matveev

Sheet: /Micro SD/

File: sd.kicad_sch

Title: MiniFRANK RM2P2

Size: A4	Date: 2026-03-13	**Rev: 1.03**
KiCad E.D.A. 9.0.7		Id: 49/12