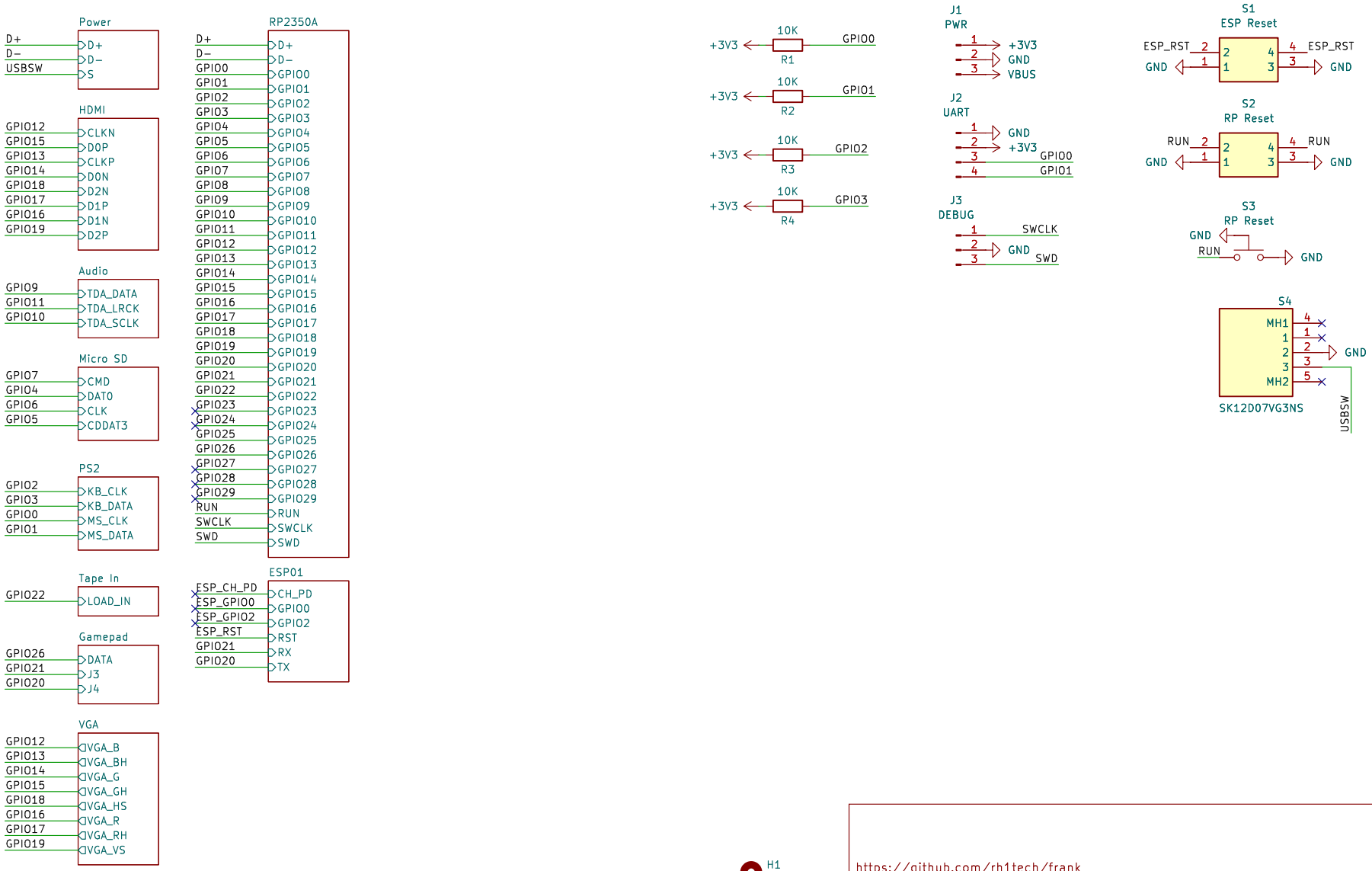

https://github.com/rh1tech/frank

Mikhail Matveev

Sheet: /

File: minifrank_m2p2.kicad_sch

Title: MiniFRANK M2P2

Size: A4	Date: 2026-03-28	**Rev: 1.04**
KiCad E.D.A. 9.0.7		Id: 1/13

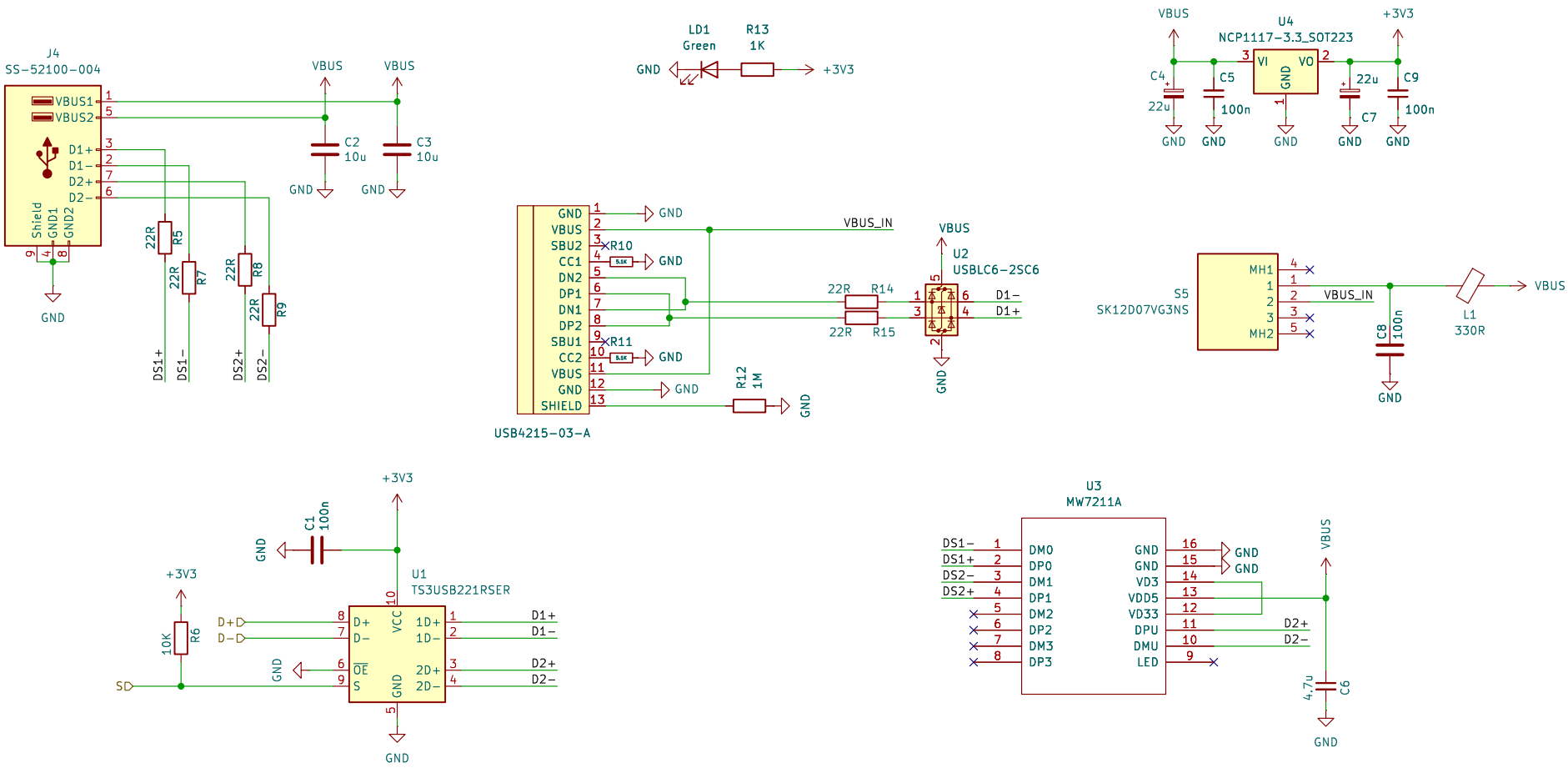

https://github.com/rh1tech/frank

Mikhail Matveev

Sheet: /Power/

File: power.kicad_sch

Title: MiniFRANK M2P2

Size: A4	Date: 2026-03-28	**Rev: 1.04**
KiCad E.D.A. 9.0.7		Id: 3/13

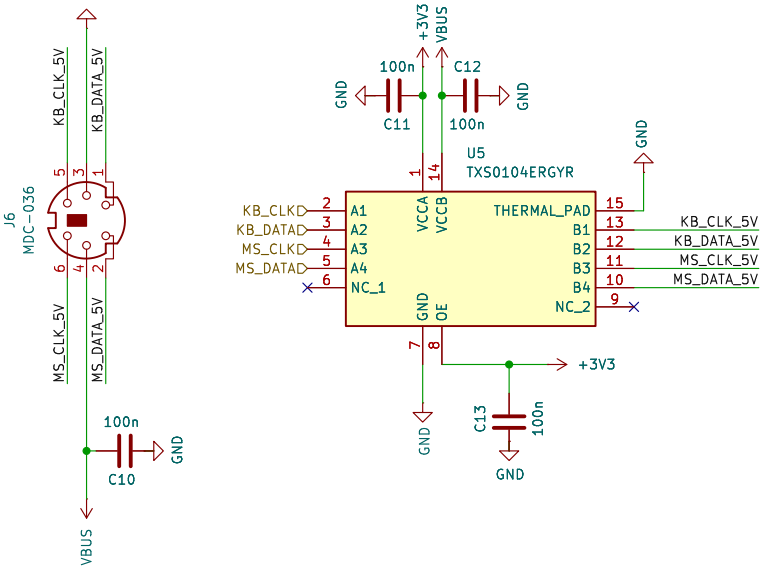

https://github.com/rh1tech/frank

Mikhail Matveev

Sheet: /PS2/

File: ps2.kicad_sch

Title: MiniFRANK M2P2

Size: A4	Date: 2026-03-28	**Rev: 1.04**
KiCad E.D.A. 9.0.7		Id: 9/13

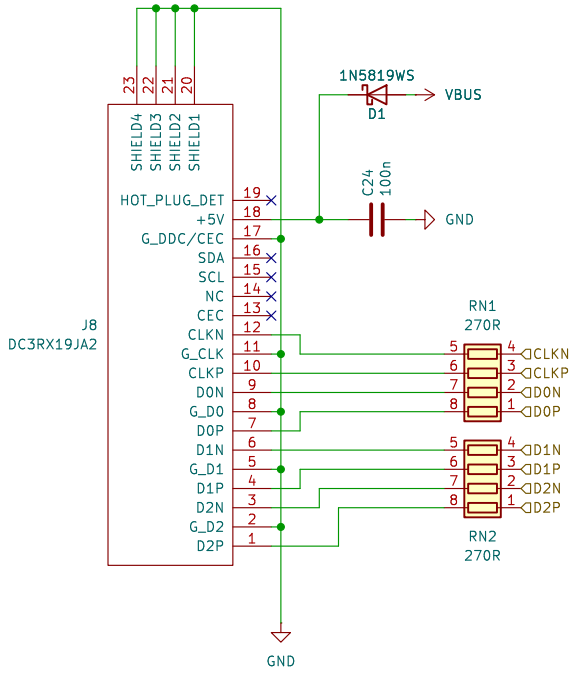

https://github.com/rh1tech/frank

Mikhail Matveev

Sheet: /HDMI/

File: hdmi.kicad_sch

Title: MiniFRANK M2P2

Size: A4	Date: 2026-03-28	**Rev: 1.04**
KiCad E.D.A. 9.0.7		Id: 10/13

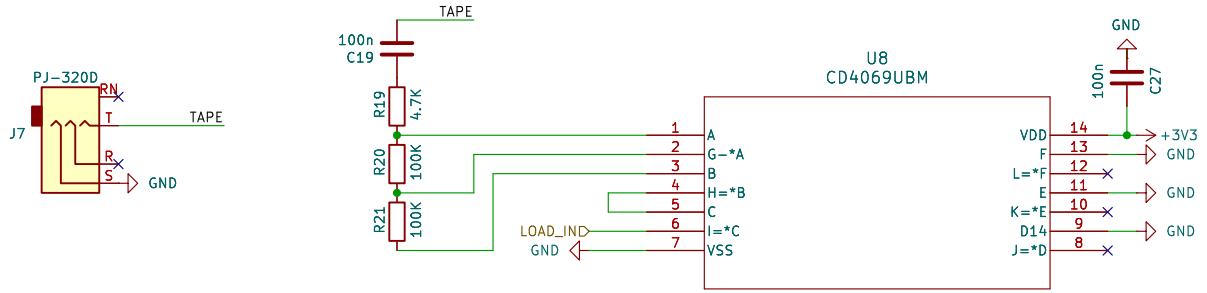

https://github.com/rh1tech/frank

Mikhail Matveev

Sheet: /Tape In/

File: tape.kicad_sch

Title: MiniFRANK M2P2

Size: A4	Date: 2026-03-28	**Rev: 1.04**
KiCad E.D.A. 9.0.7		Id: 10/13

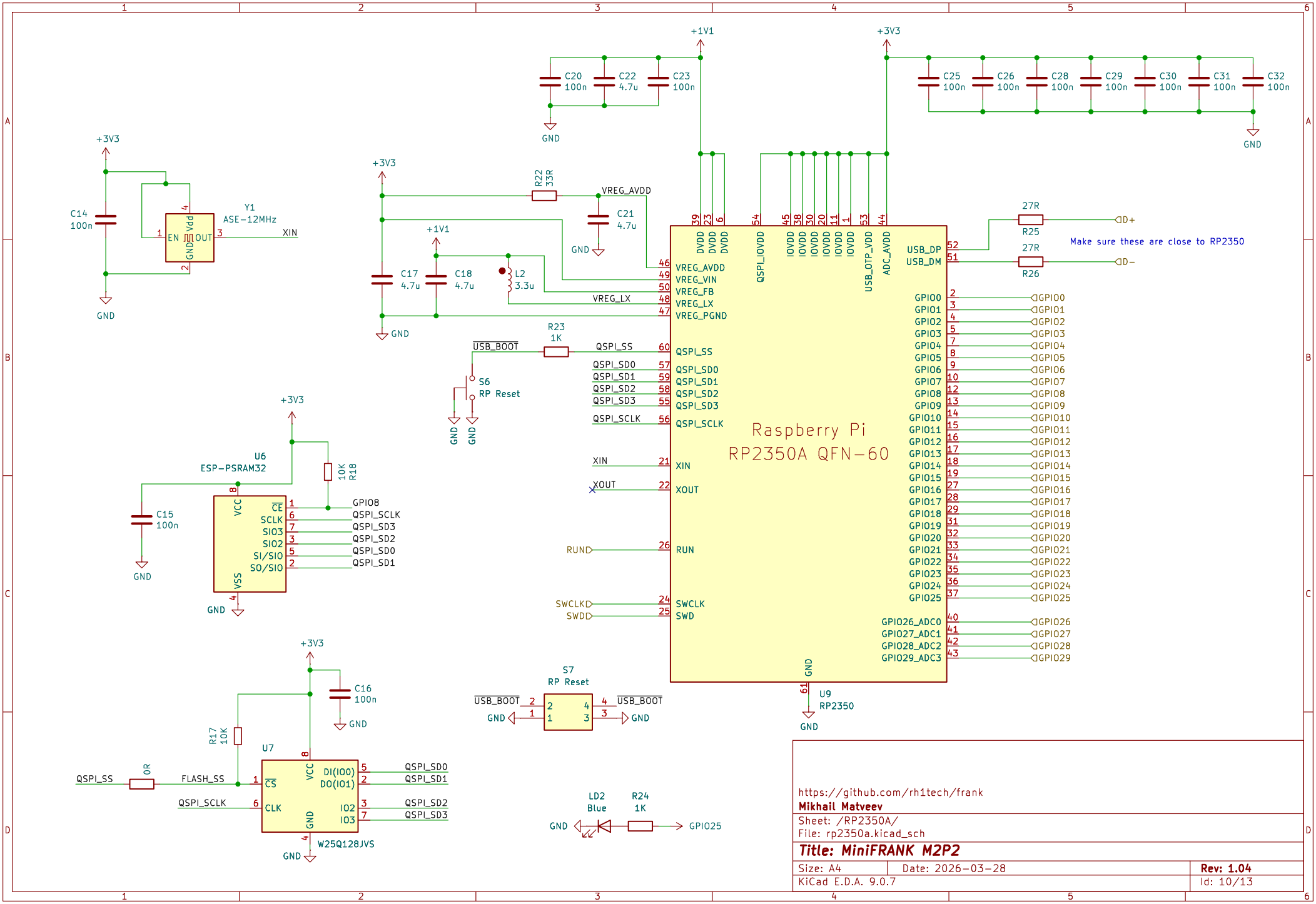

https://github.com/rh1tech/frank

Mikhail Matveev

Sheet: /RP2350A/

File: rp2350a.kicad_sch

Title: MiniFRANK M2P2

Size: A4	Date: 2026-03-28	**Rev: 1.04**
KiCad E.D.A. 9.0.7		Id: 10/13

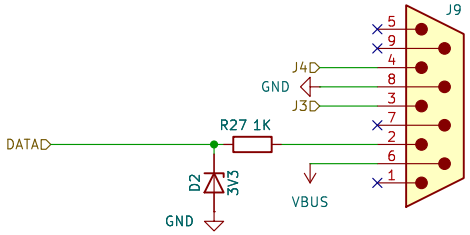

https://github.com/rh1tech/frank

Mikhail Matveev

Sheet: /Gamepad/
File: gamepad.kicad_sch

Title: MiniFRANK M2P2

Size: A4	Date: 2026-03-28	**Rev: 1.04**
KiCad E.D.A. 9.0.7		Id: 11/13

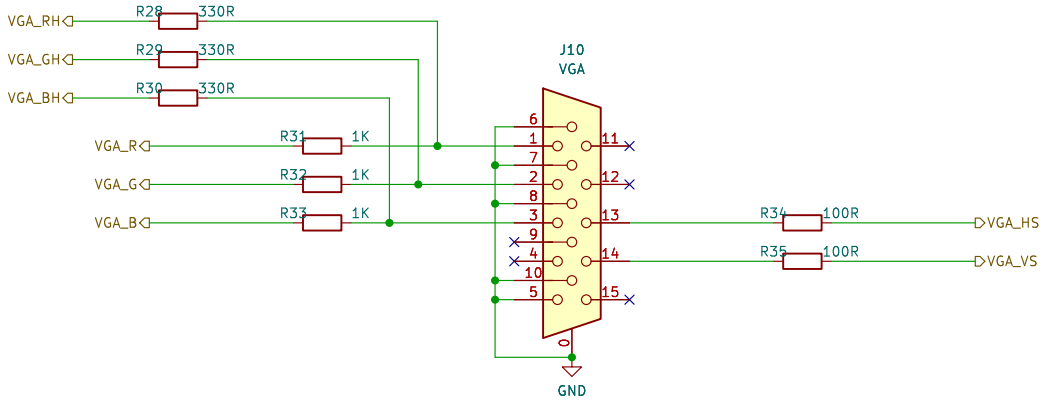

https://github.com/rh1tech/frank

Mikhail Matveev

Sheet: /VGA/

File: vga.kicad_sch

Title: MiniFRANK M2P2

Size: A4	Date: 2026-03-28	**Rev: 1.04**
KiCad E.D.A. 9.0.7		Id: 12/13

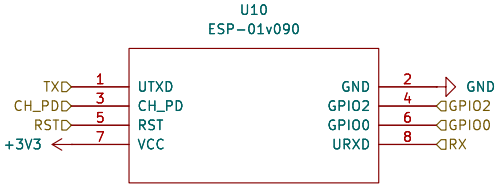

https://github.com/rh1tech/frank

Mikhail Matveev

Sheet: /ESP01/

File: esp01s.kicad_sch

Title: MiniFRANK M2P2

Size: A4	Date: 2026-03-28	**Rev: 1.04**
KiCad E.D.A. 9.0.7		Id: 13/13

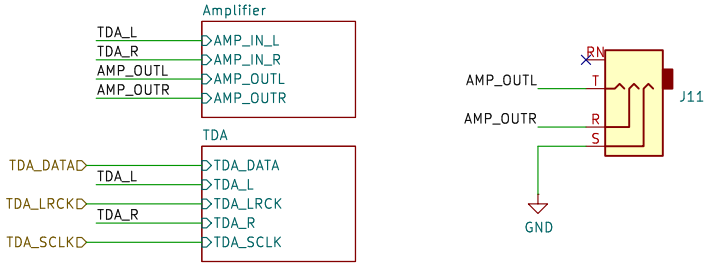

https://github.com/rh1tech/frank

Mikhail Matveev

Sheet: /Audio/

File: audio.kicad_sch

Title: MiniFRANK M2P2

Size: A4	Date: 2026-03-28	**Rev: 1.04**
KiCad E.D.A. 9.0.7		Id: 41/13

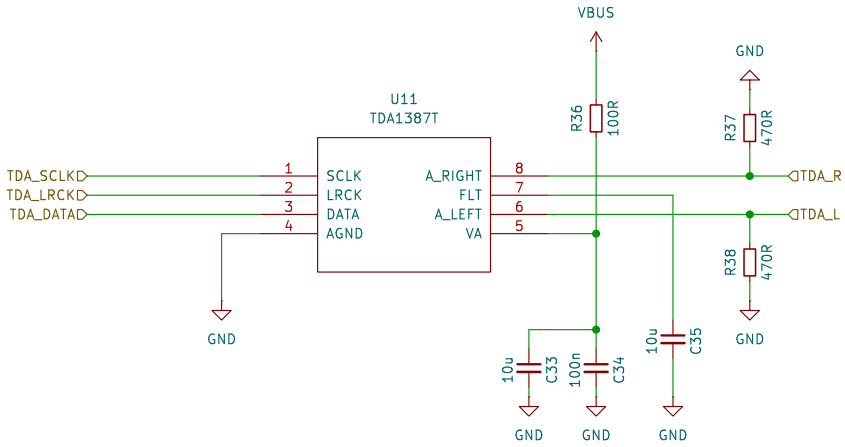

https://github.com/rh1tech/frank

Mikhail Matveev

Sheet: /Audio/TDA/

File: tda.kicad_sch

Title: MiniFRANK M2P2

Size: A4	Date: 2026-03-28	**Rev: 1.04**
KiCad E.D.A. 9.0.7		Id: 43/13

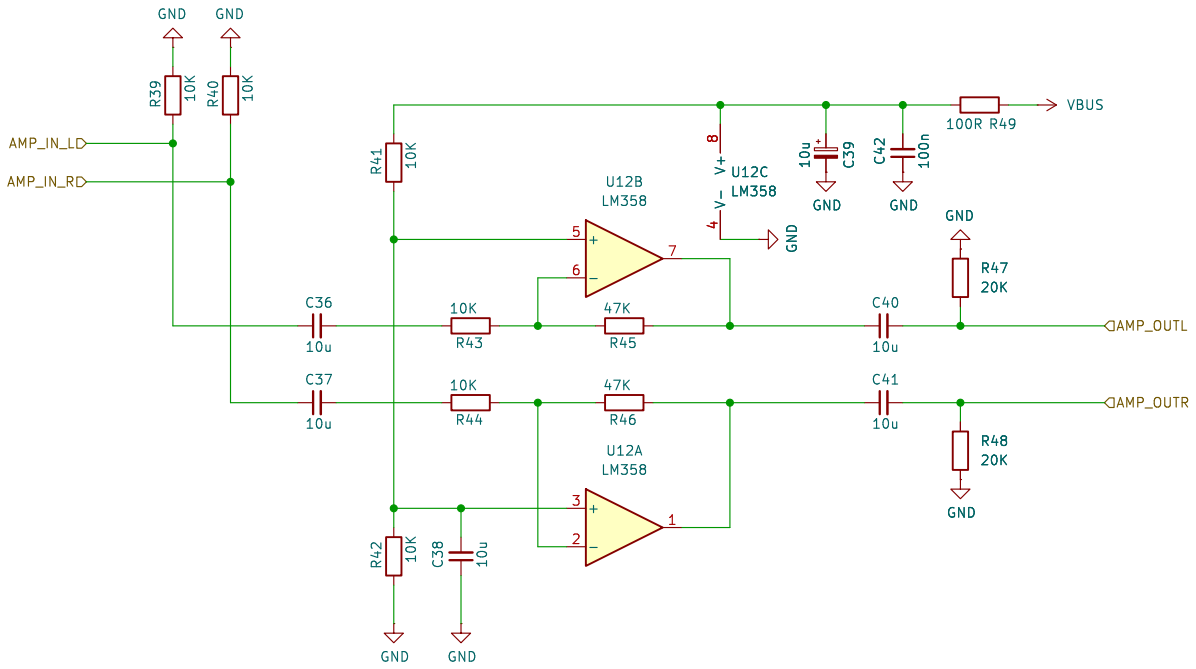

https://github.com/rh1tech/frank

Mikhail Matveev

Sheet: /Audio/Amplifier/

File: amp.kicad_sch

Title: MiniFRANK M2P2

Size: A4	Date: 2026-03-28	**Rev: 1.04**
KiCad E.D.A. 9.0.7		Id: 44/13

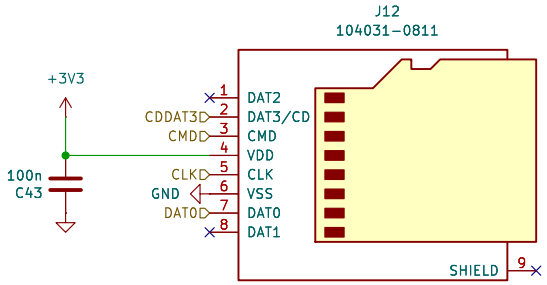

https://github.com/rh1tech/frank

Mikhail Matveev

Sheet: /Micro SD/
File: sd.kicad_sch

Title: MiniFRANK M2P2

Size: A4	Date: 2026-03-28	**Rev: 1.04**
KiCad E.D.A. 9.0.7		Id: 49/13