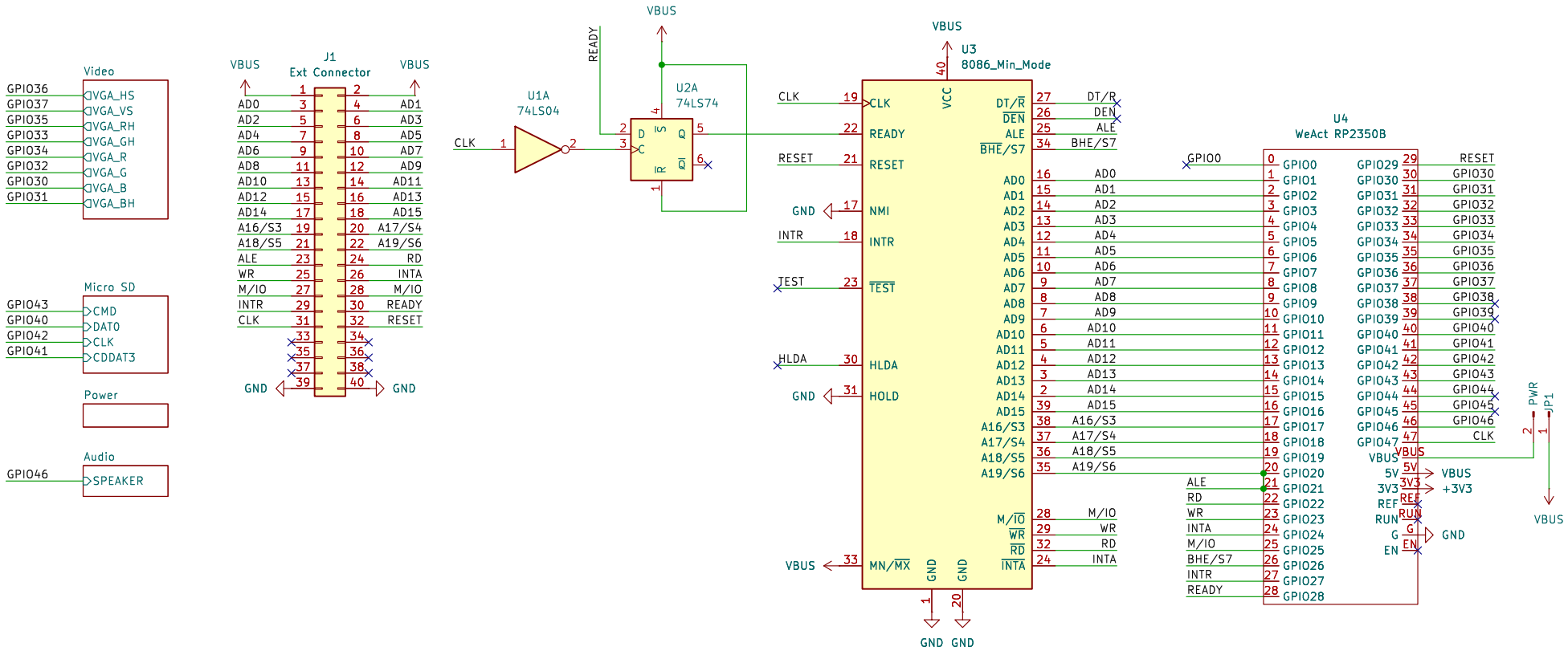

TDB

sa gin, xrip, mmatveev

Sheet: /

File: xt8086.kicad_sch

Title: xt8086 Alpha

Size: A4	Date: 2025-11-23	**Rev: 1.00**
KiCad E.D.A. 9.0.5		Id: 1/5

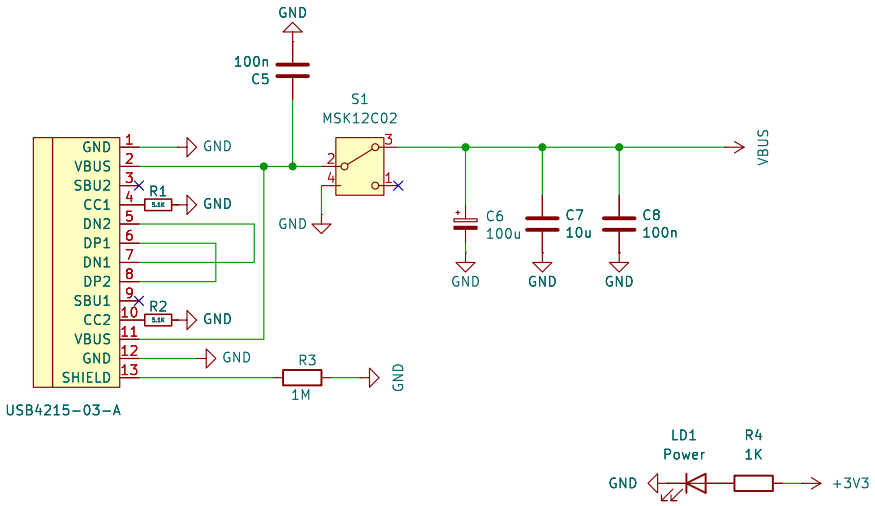

TDB

sa gin, xrip, mmatveev

Sheet: /Power/

File: power.kicad_sch

Title: xt8086 Alpha

Size: A4	Date: 2025-11-23	**Rev: 1.00**
KiCad E.D.A. 9.0.5		Id: 3/5

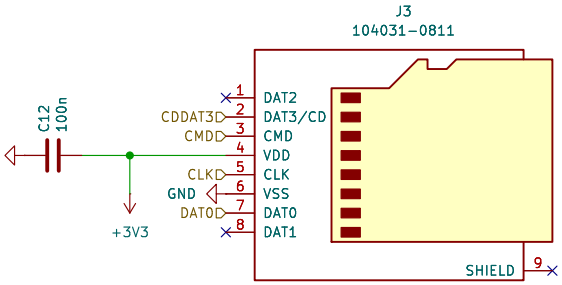

TDB

sa gin, xrip, mmatveev

Sheet: /Micro SD/
File: sd.kicad_sch

Title: xt8086 Alpha

Size: A4	Date: 2025-11-23	**Rev: 1.00**
KiCad E.D.A. 9.0.5		Id: 5/5

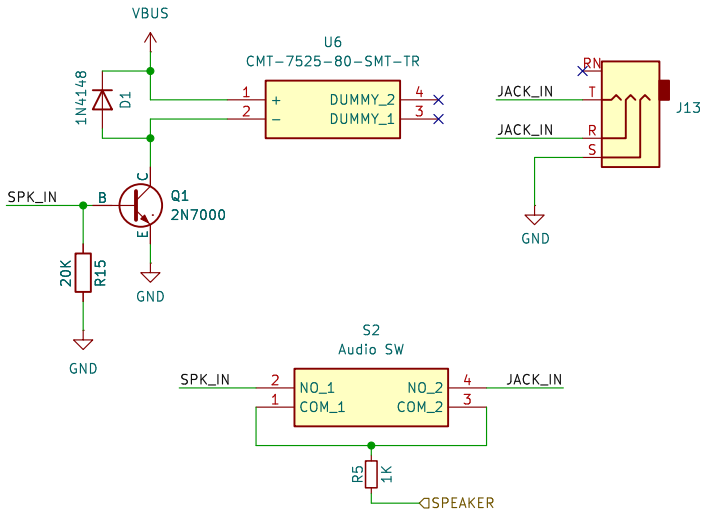

TDB

sa gin, xrip, mmatveev

Sheet: /Audio/

File: pc_speaker.kicad_sch

Title: xt8086 Alpha

Size: A4	Date: 2025-11-23	**Rev: 1.00**
KiCad E.D.A. 9.0.5		Id: 5/5

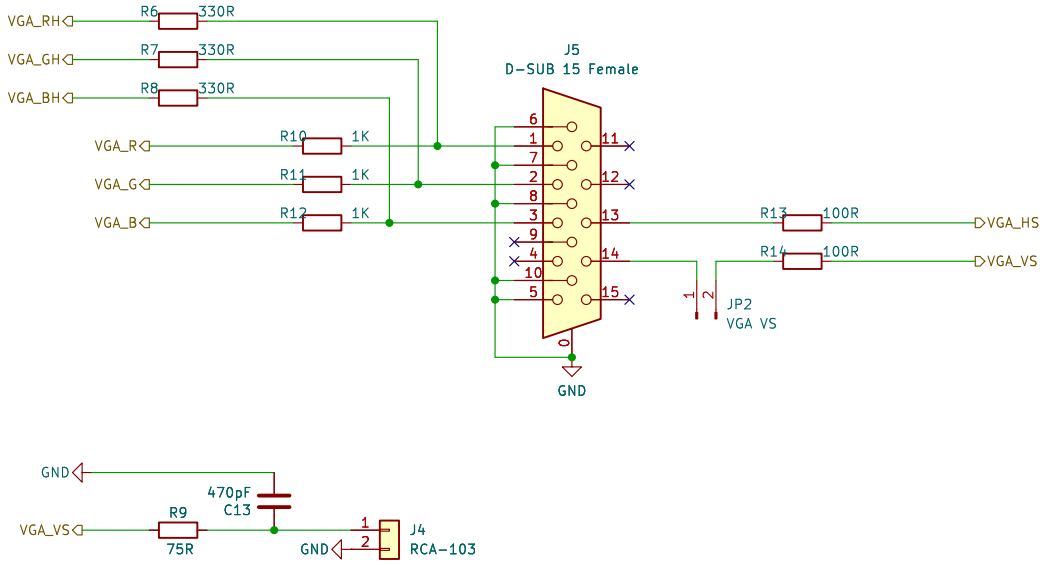

TDB

sa gin, xrip, mmatveev

Sheet: /Video/

File: vga.kicad_sch

Title: xt8086 Alpha

Size: A4	Date: 2025-11-23	**Rev: 1.00**
KiCad E.D.A. 9.0.5		Id: 16/5