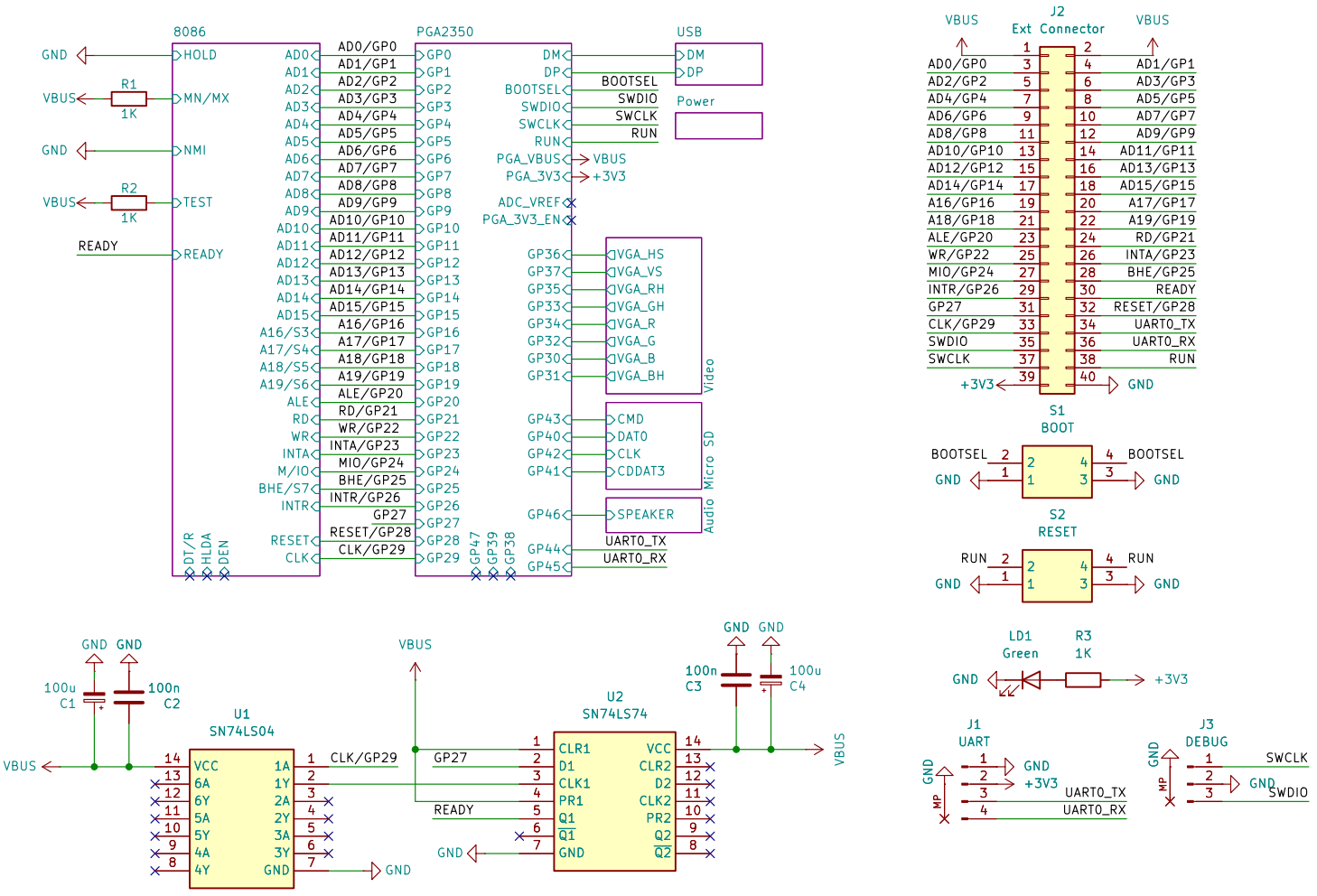

TDB

sa_gin, xrip, mmatveev

Sheet: /

File: xt8086.kicad_sch

Title: xt8086 Alpha

Size: A4	Date: 2026-04-19	**Rev: 1.01**
KiCad E.D.A. 10.0.1		Id: 1/8

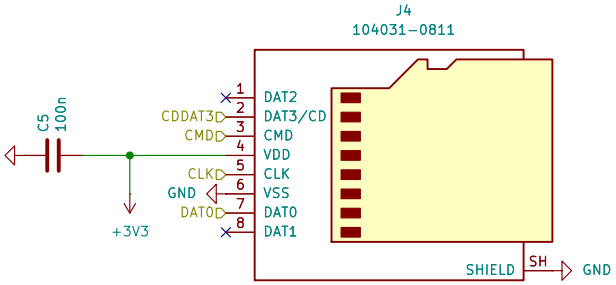

TDB

sa_gin, xrip, mmatveev

Sheet: /Micro SD/
File: sd.kicad_sch

Title: xt8086 Alpha

Size: A4	Date: 2026-04-19	**Rev: 1.01**
KiCad E.D.A. 10.0.1		Id: 5/8

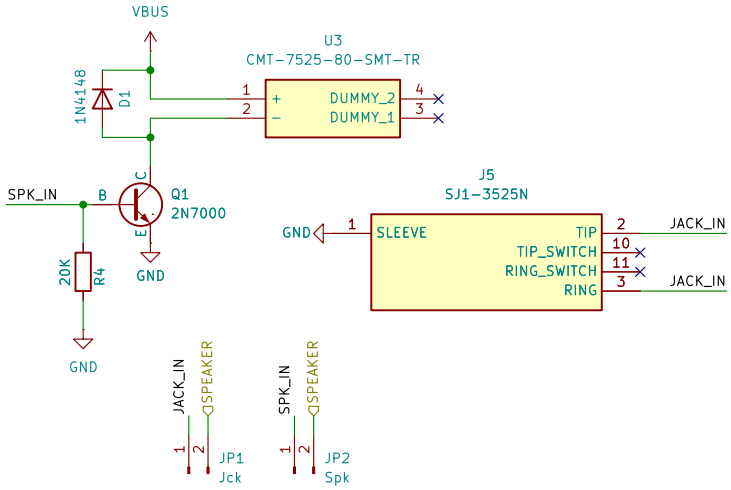

TDB

sa_gin, xrip, mmatveev

Sheet: /Audio/

File: pc_speaker.kicad_sch

Title: xt8086 Alpha

Size: A4	Date: 2026-04-19	**Rev: 1.01**
KiCad E.D.A. 10.0.1		Id: 5/8

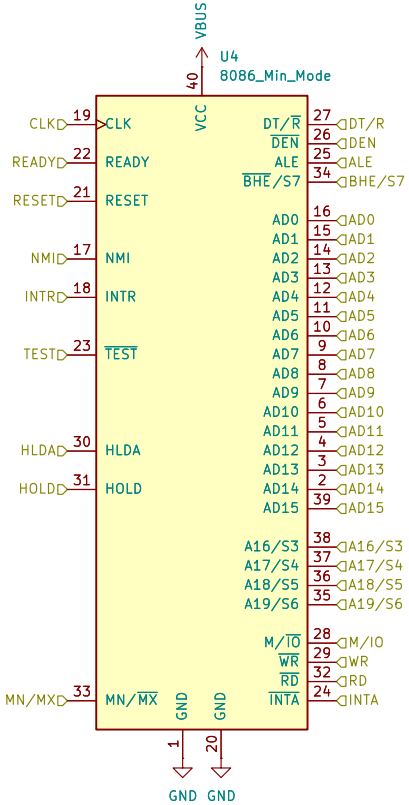

TDB

sa_gin, xrip, mmatveev

Sheet: /8086/

File: 8086.kicad_sch

Title: xt8086 Alpha

Size: A4	Date: 2026-04-19	**Rev: 1.01**
KiCad E.D.A. 10.0.1		Id: 6/8

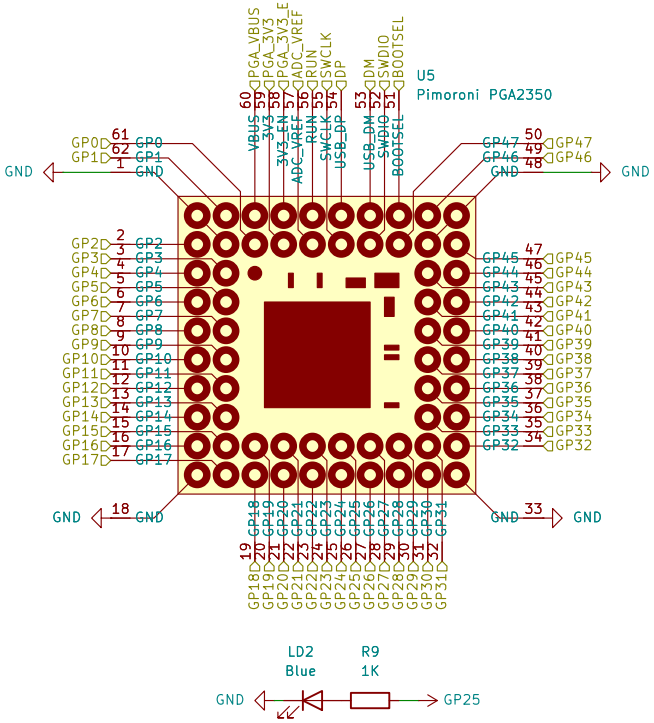

https://github.com/rh1tech/frank

Mikhail Matveev

Sheet: /PGA2350/

File: pga2350.kicad_sch

Title: xt8086 Alpha

Size: A4	Date: 2026-04-19	**Rev: 1.01**
KiCad E.D.A. 10.0.1		Id: 7/8

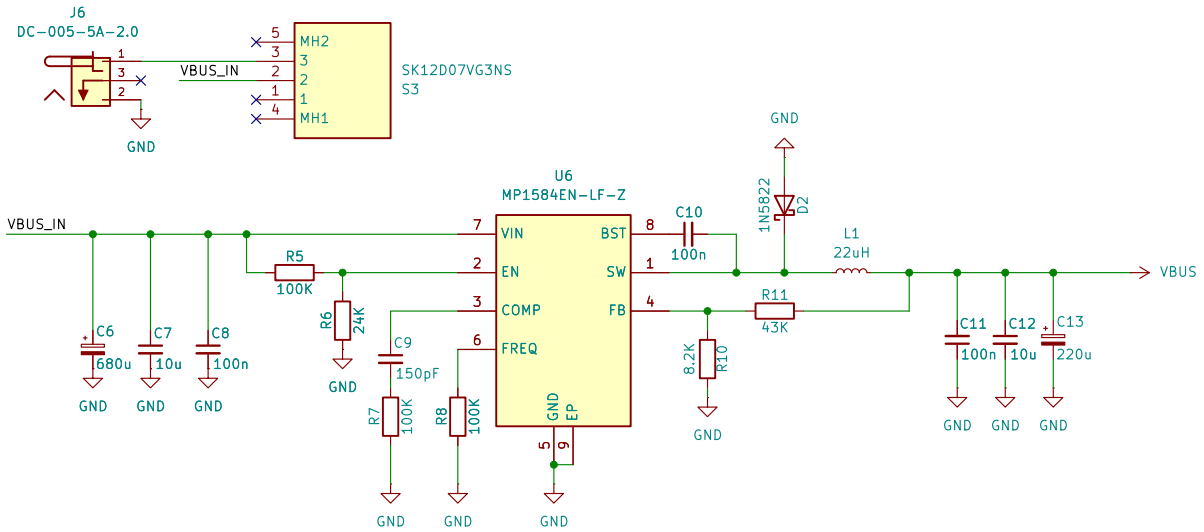

https://github.com/rh1tech/frank

Mikhail Matveev

Sheet: /Power/

File: power.kicad_sch

Title: xt8086 Alpha

Size: A4	Date: 2026-04-19	**Rev: 1.01**
KiCad E.D.A. 10.0.1		Id: 7/8

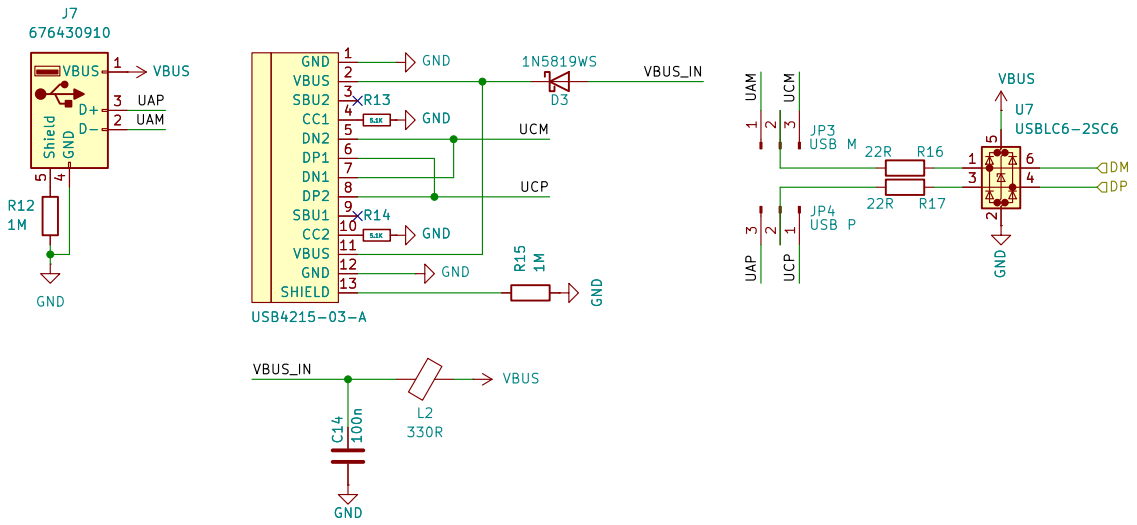

https://github.com/rh1tech/frank

Mikhail Matveev

Sheet: /USB/

File: usb.kicad_sch

Title: xt8086 Alpha

Size: A4	Date: 2026-04-19	**Rev: 1.01**
KiCad E.D.A. 10.0.1		Id: 8/8

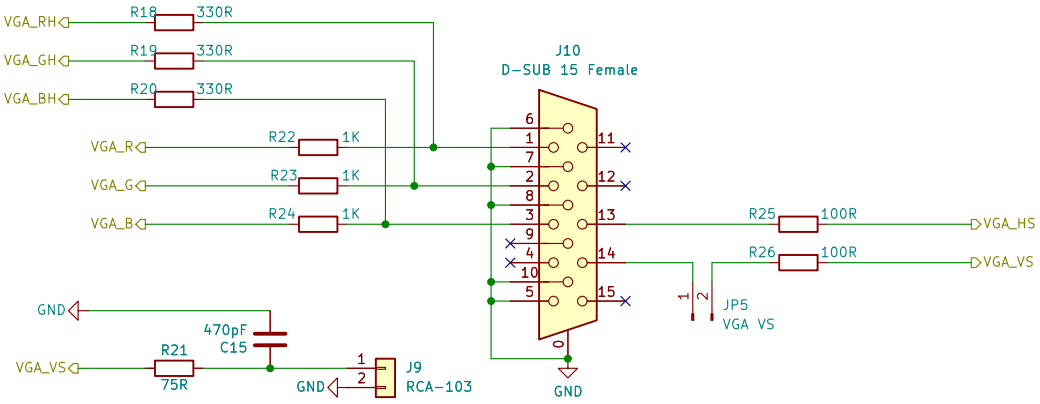

TDB

sa_gin, xrip, mmatveev

Sheet: /Video/

File: vga.kicad_sch

Title: xt8086 Alpha

Size: A4	Date: 2026-04-19	**Rev: 1.01**
KiCad E.D.A. 10.0.1		Id: 16/8