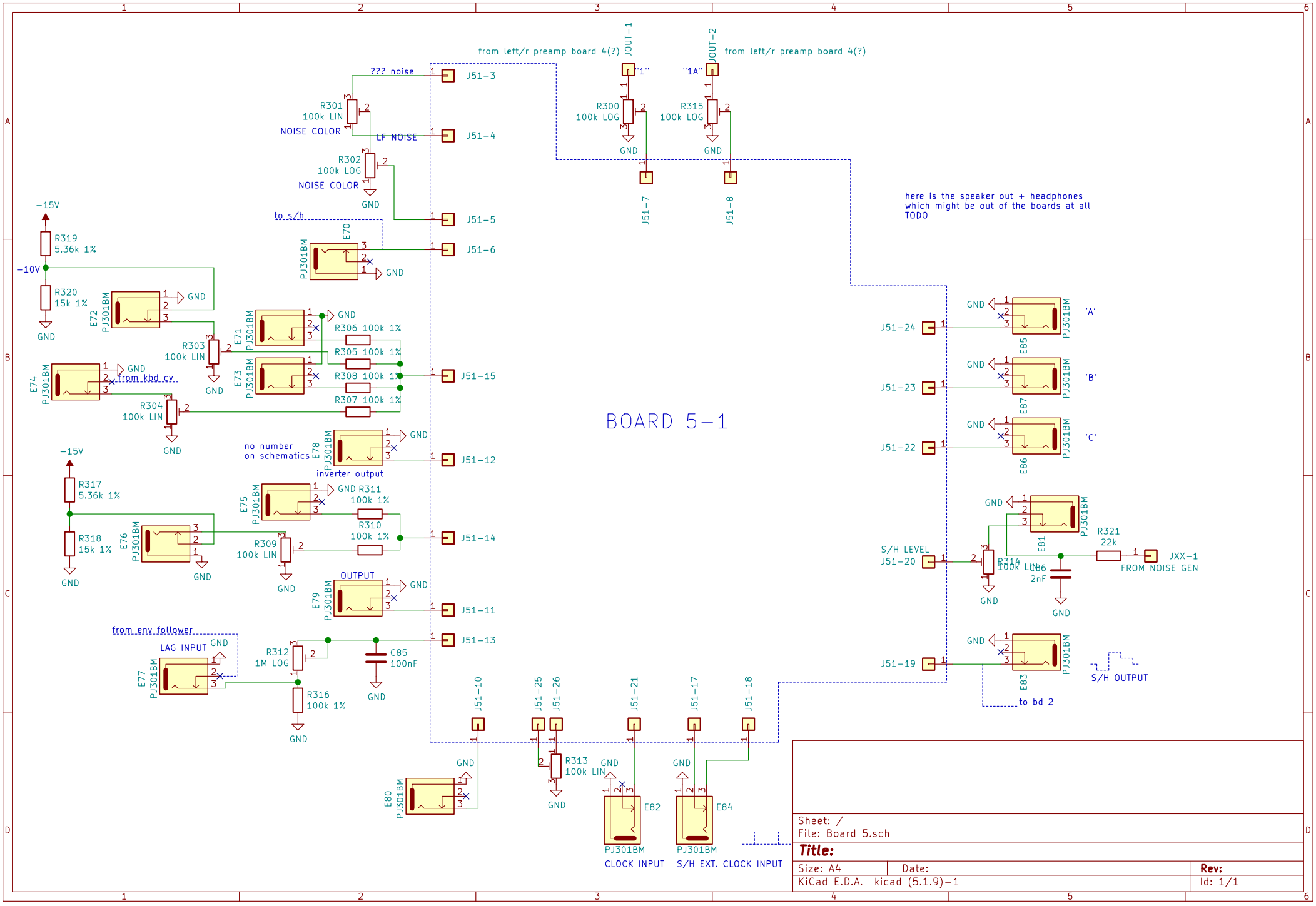
BOARD 5-1
from left/r preamp board 4(?)
JOUT-1
"1"
R300
100k LOG
GND
J51-7
from left/r preamp board 4(?)
JOUT-2
"1A"
R315
100k LOG
GND
J51-8
??? noise
J51-3
R301
100k LIN
NOISE COLOR
LF NOISE
J51-4
R302
100k LOG
NOISE COLOR
GND
J51-5
to s/h
E70
PJ301BM
GND
J51-6
-15V
R319
5.36k 1%
-10V
R320
15k 1%
GND
E72
PJ301BM
GND
E71
PJ301BM
GND
R306 100k 1%
R305 100k 1%
R303
100k LIN
GND
E73
PJ301BM
R308 100k 1%
R307 100k 1%
J51-15
E74
PJ301BM
GND
from kbd cv
R304
100k LIN
GND
no number
on schematics
E78
PJ301BM
GND
inverter output
J51-12
-15V
R317
5.36k 1%
R318
15k 1%
GND
E76
PJ301BM
GND
E75
PJ301BM
GND
R311
100k 1%
R310
100k 1%
R309
100k LIN
GND
J51-14
OUTPUT
E79
PJ301BM
GND
J51-11
from env follower
LAG INPUT
GND
E77
PJ301BM
R312
1M LOG
C85
100nF
GND
R316
100k 1%
GND
J51-13
J51-10
J51-25
J51-26
J51-21
J51-17
J51-18
GND
E80
PJ301BM
R313
100k LIN
GND
GND
E82
PJ301BM
CLOCK INPUT
GND
E84
PJ301BM
S/H EXT. CLOCK INPUT
here is the speaker out + headphones
which might be out of the boards at all
TODO
J51-24
GND
E85
PJ301BM
'A'
J51-23
GND
E87
PJ301BM
'B'
J51-22
GND
E86
PJ301BM
'C'
GND
E81
PJ301BM
R321
22k
S/H LEVEL
J51-20
R314
100k LIN
C86
2nF
GND
GND
JXX-1
FROM NOISE GEN
J51-19
GND
E83
PJ301BM
to bd 2
S/H OUTPUT
Sheet: /
File: Board 5.sch
Title:
Size: A4
Date:
Rev:
KiCad E.D.A. kicad (5.1.9)-1
Id: 1/1