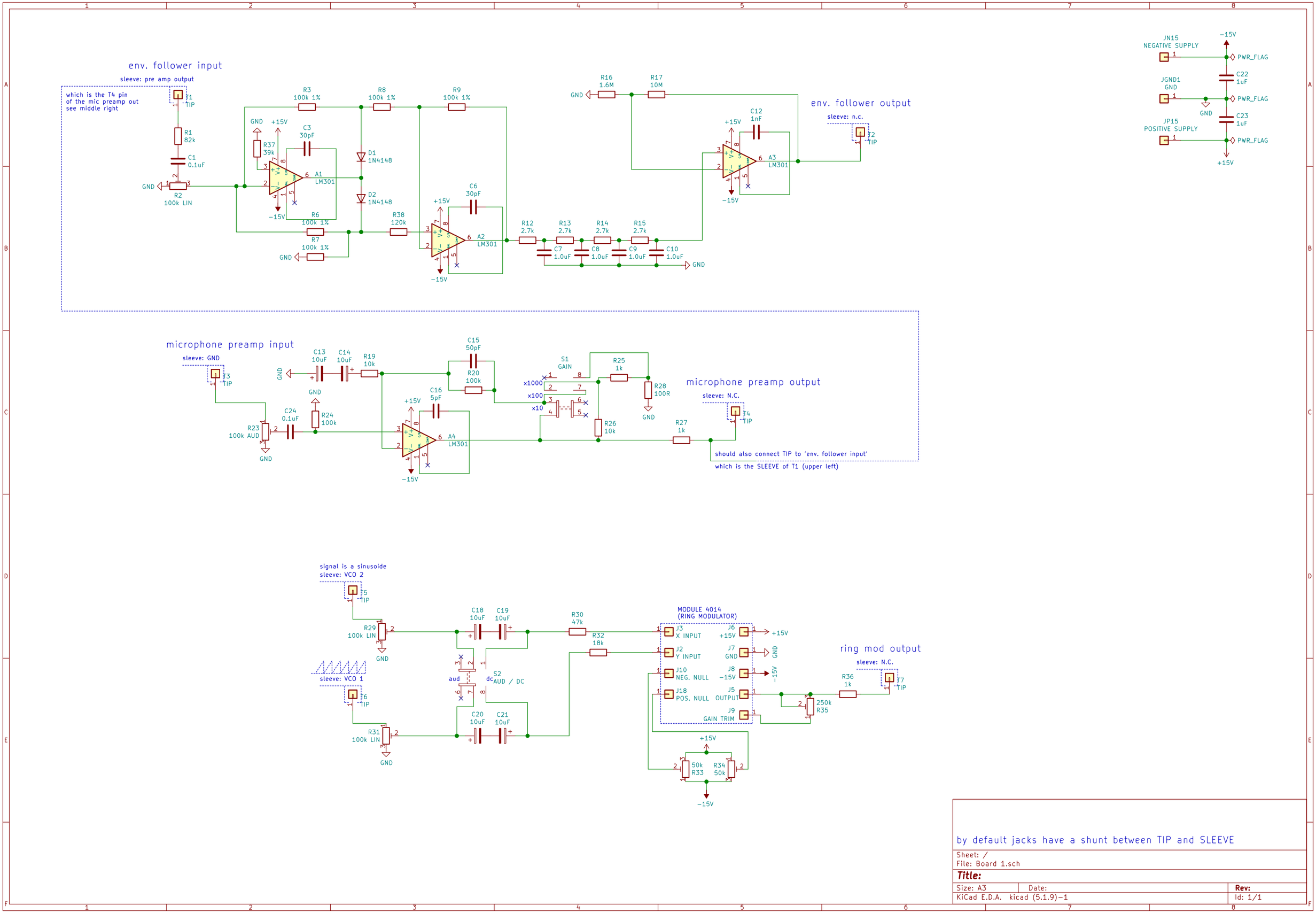

by default jacks have a shunt between TIP and SLEEVE

Sheet: /
File: Board 1.sch

Title:

Size: A3	Date:	Rev:
KiCad E.D.A. kicad (5.1.9)-1		Id: 1/1