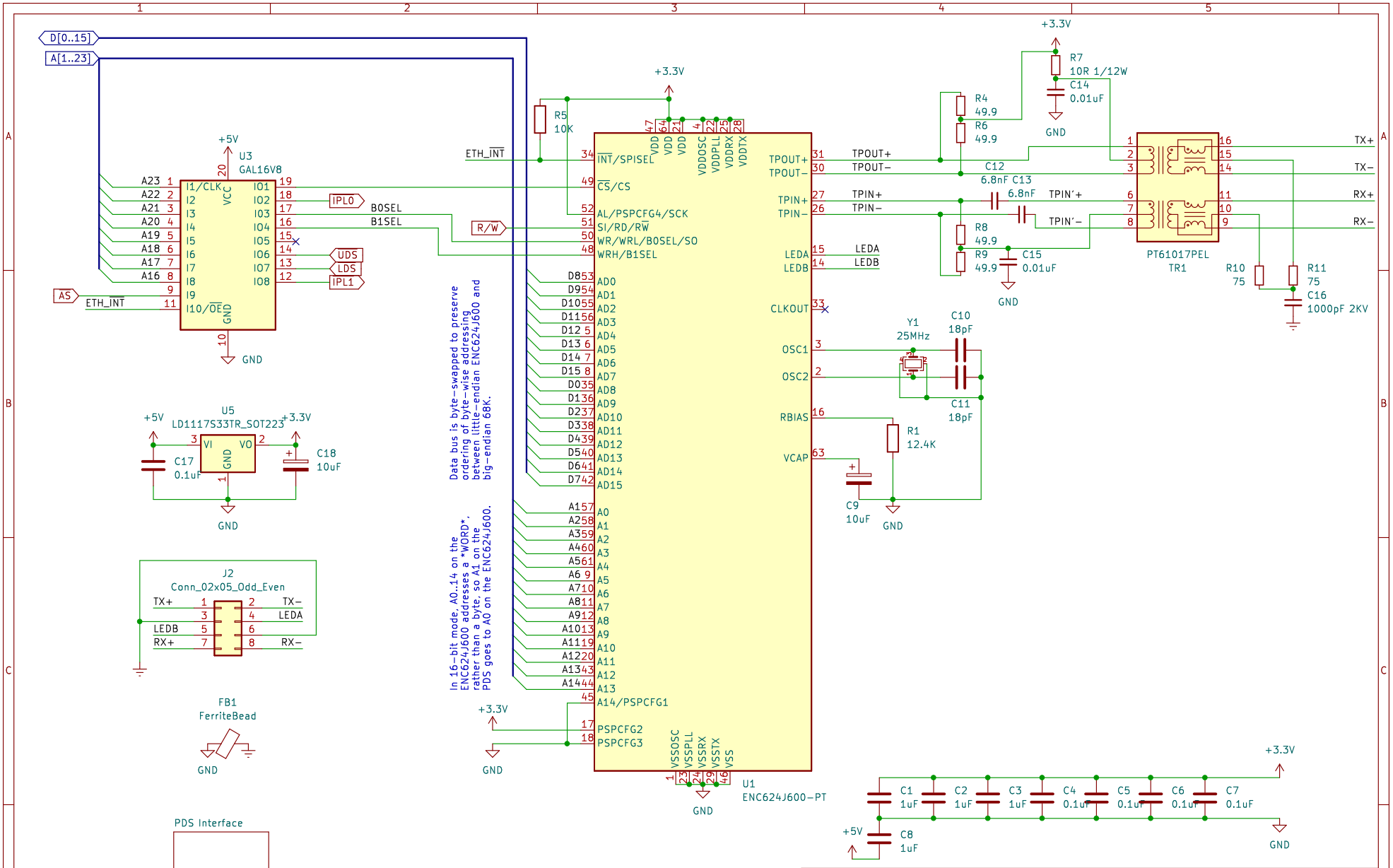

Sheet:
File: se.kicad_sch

Title: SEthernet PDS Ethernet Card for Macintosh SE

Size: USLetter	Date: 2023-11-10	Rev: 0
KiCad E.D.A. kicad (7.0.0)		Id: 1/2

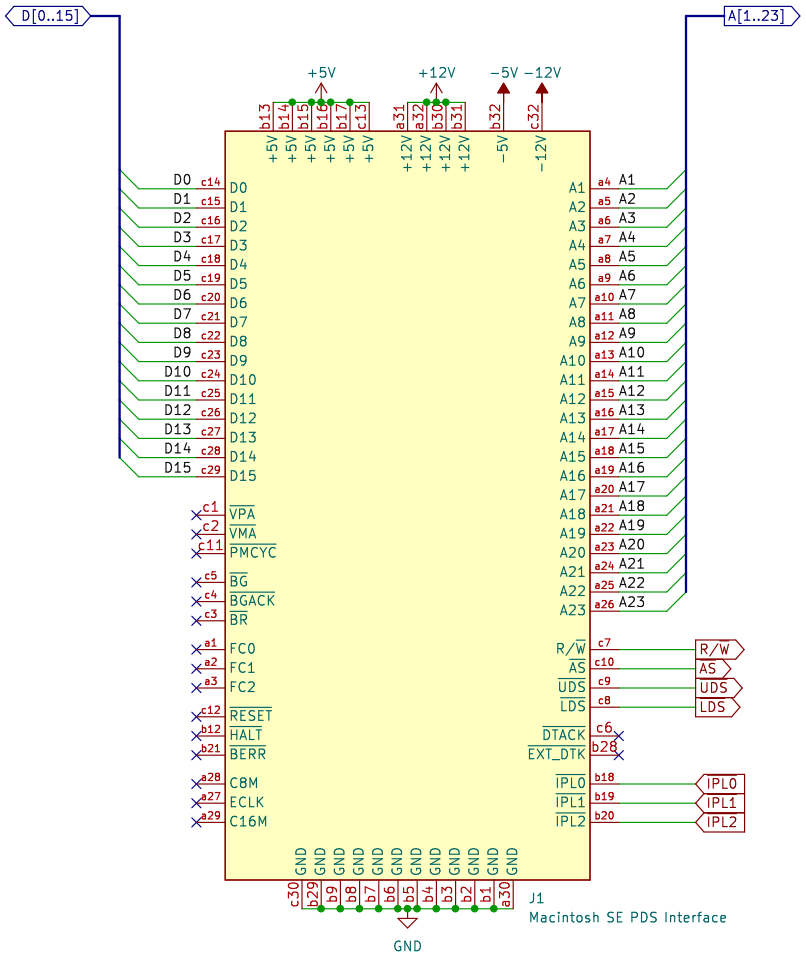

Sheet:
File: pds.kicad_sch

Title: SEthernet PDS Ethernet Card for Macintosh SE

Size: USLetter	Date: 2023-11-10	Rev: 0
KiCad E.D.A. kicad (7.0.0)		Id: 2/2