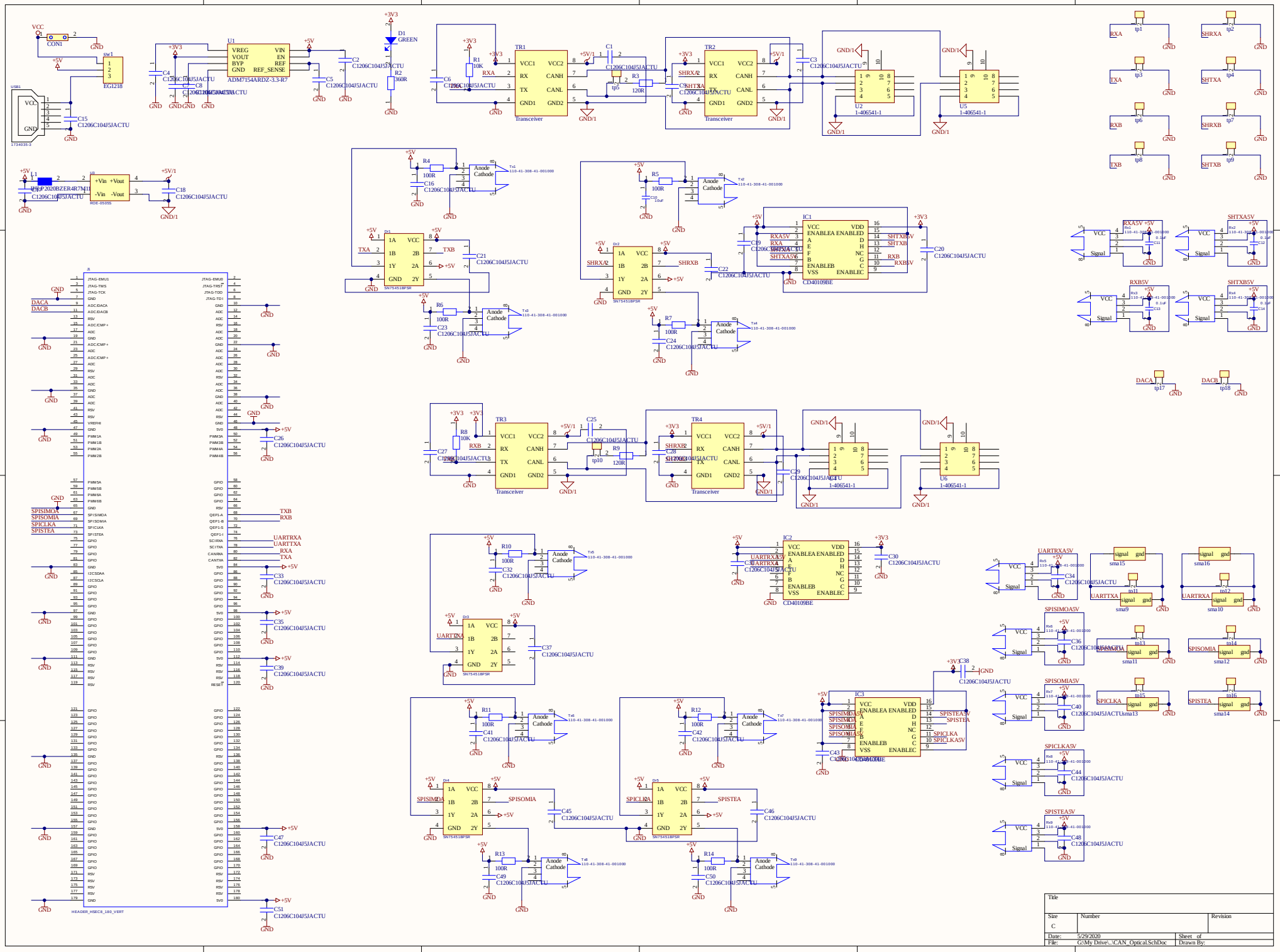
VCC
CON1
GND
sw1
EG1218
+5V
USB1
C15
C1206C104J5ACTU
1734035-2
U1
VREG
VOUT
BYP
GND
VIN
EN
REF
REF_SENSE
ADM7154ARDZ-3.3-R7
+3V3
C4
C8
C5
C2
D1
GREEN
R2
360R
TR1
VCC1
VCC2
RX
CANH
TX
CANL
GND1
GND2
Transceiver
R1
10K
RXA
C6
C1
R3
120R
tp5
GND/1
TR2
SHRXA
SHTXA
C3
U2
1-406541-1
U5
tp1
tp2
tp3
tp4
tp6
tp7
tp8
tp9
RXA
SHRXA
TXA
SHTXA
RXB
SHRXB
TXB
SHTXB
U3
+Vin
-Vin
+Vout
-Vout
ROE-0505S
+5V/1
C18
GND/1
R4
100R
C16
Anode
Cathode
Tx1
110-41-308-41-001000
Dr1
1A
1B
1Y
GND
VCC
2B
2A
2Y
SN75451BPSR
TXB
C21
R5
C10
10uF
Tx2
Dr2
SHRXB
C22
IC1
VCC
VDD
ENABLEA
ENABLED
A
E
F
B
ENABLEB
VSS
D
H
NC
G
C
ENABLEC
CD40109BE
RXA5V
SHTXA5V
SHTXB5V
RXB5V
C19
C20
R6
C23
Tx3
R7
C24
Tx4
RXA5V +5V
SHTXA5V
RXB5V
SHTXB5V
VCC
Signal
GND
DACA
DACB
tp17
tp18
J1
JTAG-EMU1
JTAG-TMS
JTAG-TCK
JTAG-TRST
JTAG-TDO
JTAG-TDI
ADC.DACA
ADC.DACB
ADC.CMP +
ADC.CMP -
VREFHI
PWM1A
PWM1B
PWM2A
PWM2B
PWM5A
PWM5B
PWM6A
PWM6B
SPISIMOA
SPISOMIA
SPICLKA
SPISTEA
I2CSDAA
I2CSCLA
SCITXA
CANRXA
CANTXA
QEP1-A
QEP1-B
QEP1-S
QEP1-I
SCIRXA
TXB
RXB
UARTRXA
UARTTXA
RXA
TXA
C26
C33
C35
C39
C47
C51
HEADER_HSEC8_180_VERT
TR3
C25
R8
10K
R9
tp10
TR4
C28
C29
U4
U6
R10
Tx5
Dr3
UARTTXA
C37
IC2
C30
C32
UARTRXA5V
UARTTXA5V
UARTRXA5V
UARTTXA5V
UARTRXA5V
UARTTXA
C34
sma15
sma16
sma9
sma10
SPISIMOA5V
SPISOMIA5V
SPICLKA5V
SPISTEA5V
C36
C40
C44
C48
sma11
sma12
sma13
sma14
SPISIMOA
SPISOMIA
SPICLKA
SPISTEA
R11
Tx6
C41
Dr4
C45
R12
Tx7
C42
Dr5
C46
IC3
C38
C43
R13
Tx8
C49
R14
Tx9
C50
Title
Size
C
Number
Revision
Date: 5/29/2020
File: G:\My Drive\...\CAN_OpticalSchDoc
Sheet of
Drawn By:

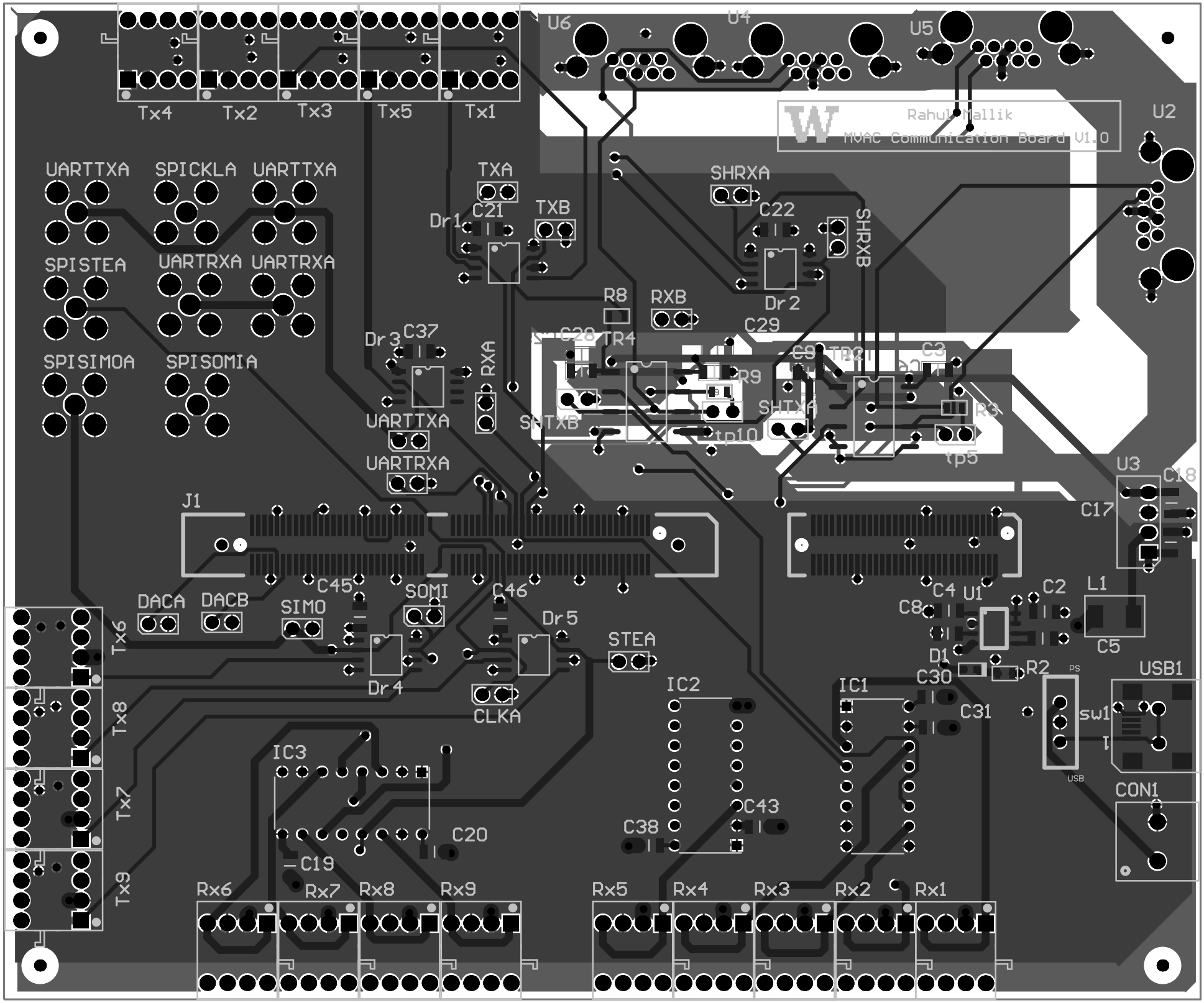
Rahul Mallik
MVAC Communication Board V1.0
Tx4
Tx2
Tx3
Tx5
Tx1
U6
U4
U5
U2
UARTTXA
SPICKLA
UARTTXA
SPISTEA
UARTRXA
UARTRXA
SPISIMOA
SPISOMIA
TXA
TXB
C21
Dr1
SHRXA
C22
SHRXB
Dr2
R8
RXB
C29
C28
TR4
C9
TR2
C3
R9
SHTXA
R3
SHTXB
tp10
tp5
Dr3
C37
RXA
UARTTXA
UARTRXA
U3
C18
C17
J1
DACA
DACB
SIMO
C45
SOMI
C46
Dr5
STEA
Dr4
CLKA
C4
U1
C2
L1
C8
C5
D1
R2
PS
C30
C31
USB1
sw1
USB
IC2
IC1
IC3
C43
C38
C20
C19
CON1
Tx6
Tx8
Tx7
Tx9
Rx6
Rx7
Rx8
Rx9
Rx5
Rx4
Rx3
Rx2
Rx1