550 Bailey Avenue #400, Fort Worth, TX. 76107
Office: 817.632.4832 | Website: www.dunaway.com

Engineer's Review of Submittal

Project Name: CR 543 NTMWD Take Point - Meter Vault

Project Owner: City of Josephine

Engineer: Dunaway

Contractor: Summit Solutions

Submittal No.	05
Description/Name	SD-1411 Grounding
Date Received	6.16.25
Specification	
Manufacturer	
Vendor	

Contractor	Engineer

Comments:

NORTH TEXAS MUNICIPAL WATER DISTRICT

JOSEPHINE TAKE POINT IMPROVEMENTS PROJECT
NTMWD PROJECT NO. WA3527

Electrical Submittal

for

Grounding
(1411)

Dunaway
118 McKinney Street, P.O. Box 606
Farmersville, Texas 75442
(972) 784-7777

Summit Solutions
190 E. Stacy Road, Suite 306-144
Allen, Texas 75002
(678) 283-7355

H & H Electrical Contractors, Inc.
8475 County Road 271
Terrell, Texas 75160
(972) 524-0205

4/9/2025

RETURN to Table of Contents

ServiceWire Co.
Manufacturing quality. Delivering service.
Made in the USA
ISO 9001:2008

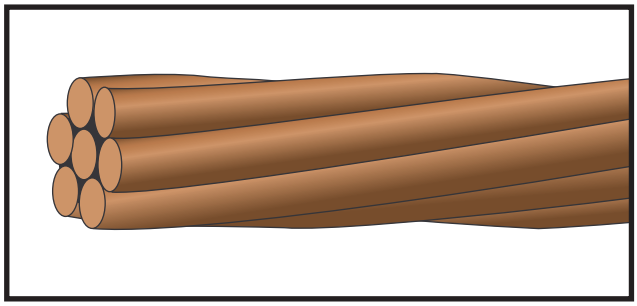

Bare Copper Stranded Conductor

Bare or Tinned, Soft (Annealed), Medium Hard, Hard Drawn

Application:
Suitable for use in electrical grounding systems (including counterpoise grounding) and on insulators for overhead transmission and distribution applications. Stranded conductors offer greater flexibility than solid.

Ground Mat and Associated Pig Tails

Standards:
ASTM Standards:
- B-1 (hard drawn)
- B-2 (medium hard drawn)
- B-3 (soft or annealed)
- B-8 (concentric lay stranded)
- B-33 (tinned)

REA/RUS Approved
Federal Standard QQ-W-343
RoHS Compliant

STRANDED BARE COPPER

Part Number	Size Kcmil	Strand (no.)	Stranding Class	Nominal Diameter Overall (inch)	Approx. Net Weight (lb/1000')	Hard Drawn		Medium Hard Drawn		Soft Drawn		Ampacity*
						Min. Breaking Strength (lbs.)	DC Resistance (OHMS/1000') @ 20°C	Min. Breaking Strength (lbs.)	DC Resistance (OHMS/1000') @ 20°C	DC Resistance (OHMS/1000') @ 20°C		
										Bare	Tinned	
BST19S250	250	19	A	0.574	771.9	11,360	0.0440	8,836	0.0438	0.0423	0.0435	494
BST37S250	250	37	B	0.572	771.9	11,600	0.0440	8,952	0.0438	0.0423	0.0440	494
BST19S300	300	19	A	0.629	926.3	13,510	0.0366	10,530	0.0365	0.0352	0.0363	556
BST37S300	300	37	B	0.629	926.3	13,855	0.0366	10,732	0.0365	0.0353	0.0367	556
BST19S350	350	19	A	0.678	1,081.0	15,590	0.0314	12,200	0.0313	0.0302	0.0311	-
BST37S350	350	37	B	0.676	1,081.0	16,070	0.0314	12,462	0.0313	0.0302	0.0314	-
BST19S400	400	19	A,AA	0.726	1,235.0	17,810	0.0275	13,950	0.0273	0.0264	0.0272	-
BST37S400	400	37	B	0.721	1,235.0	18,331	0.0275	14,144	0.0273	0.0264	0.0272	-
BST19S500	500	19	AA	0.811	1,544.0	21,942	0.0220	17,313	0.0219	0.0212	0.0218	773
BST37S500	500	37	A,B	0.796	1,544.0	22,495	0.0220	17,517	0.0219	0.0212	0.0218	773
BST61S600	600	61	B	0.887	1,853.0	27,530	0.0183	21,350	0.0182	0.0176	0.0181	-
BST37S750	750	37	AA	0.997	2,316.0	33,411	0.0146	26,162	0.0146	0.0141	0.0145	1,000
BST61S750	750	61	A,B	0.985	2,316.0	34,090	0.0146	26,510	0.0146	0.0141	0.0145	1,000
BST37S1000	1000	37	AA	1.152	3,088.0	43,826	0.0110	34,396	0.0109	0.0106	0.0109	1,193
BST61S1000	1000	61	A,B	1.152	3,088.0	45,030	0.0110	35,100	0.0109	0.0106	0.0109	1,193

*Per NEC Table 310-21. Based on conductor temperature of 80°C; ambient temperature of 40°C; 2 ft./sec. wind.
NOTE: The data shown is approximate and subject to standard industry tolerances.

servicewire.com
Phoenix, AZ 877-623-9473
Culloden, WV 800-624-3572
Houston, TX 800-231-9473

Galvanized ground rod

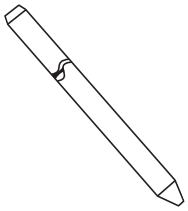

- Made of high strength quality steel, hot dip galvanized.
- Meets ANSI CI35.30-1979 requirements.
- Stainless steel rods are also available ***(For more detailed information, contact your T&B regional sales office).***

Cat. No.	Rod Size (nominal diameter x length) in.		ft.	mm.		m.	Standard Package	Weight Per 100 lb.	kg.
GR5006	1/2	x	6	12.7	x	1.8	10	410	186
GR6256	5/8	x	6	15.8	x	1.8	5	600	272
GR6258	5/8	x	8	15.8	x	2.4	5	800	363
GR6250	5/8	x	10	15.8	x	3.0	5	1000	454
GR6250B*	5/8	x	10	15.8	x	3.0	5	1000	454
GR7506	3/4	x	6	15.8	x	1.8	5	700	318
GR7508	3/4	x	8	19.0	x	2.4	5	1200	545
GR7510	3/4	x	10	19.0	x	3.0	5	1500	681

*** B** suffix demotes black iron bare steel ground rod (not CSA certified).
CSA lists rods 1/2" in. and larger, 10 ft. and longer.

Copper Bonded steel ground rod

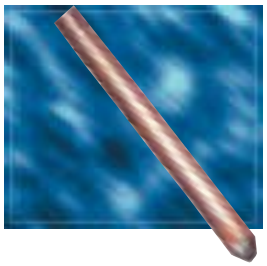

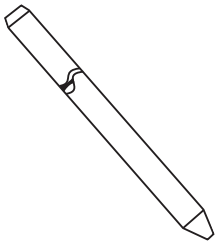

- All Blackburn ground rods have a heavy uniform covering of electrolytic copper bonded to a rigid steel core.
- Copper ions are forced electrically to join with the steel core, establishing a corrosion-resistant bond between the copper and the steel.

Cat. No.	Rod Size (nominal diameter x length) in.		ft.	mm.		m.	Standard Package	Weight Per 100 lb.	kg.
5005	1/2	x	5	12.7	x	1.5	5	305	138
5006	1/2	x	6	12.7	x	1.8	5	370	168
5008	1/2	x	8	12.7	x	2.4	5	545	247
5010	1/2	x	10	12.7	x	3.0	5	611	277
6256	5/8	x	6	15.8	x	1.8	5	508	230
6258*	5/8	x	8	15.8	x	2.4	5	678	308
6260*	5/8	x	10	15.8	x	3.0	5	847	384
7508*	3/4	x	8	19.0	x	2.4	5	992	450
7510*	3/4	x	10	19.0	x	3.0	5	1240	462
1010*	1	x	10	25.4	x	3.0	5	2248	1020

*Ground rods are UL listed (425H). except for regular rods shorter than 8 ft. or less than 1/2 in.
CSA lists rods 1/2" in. and larger, 10 ft. and longer.

CADWELD®

Welded Electrical Connections

Facility Electrical Protection

ERICO®

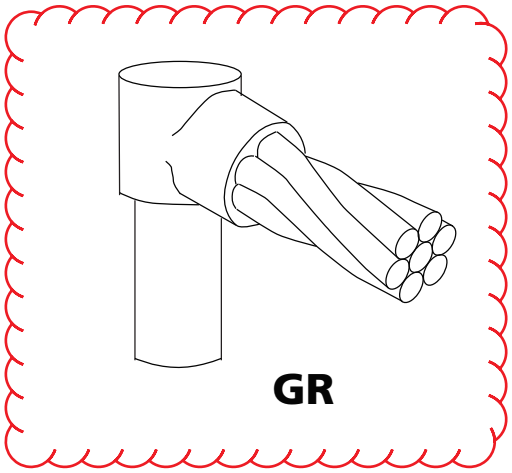

CABLE TO GROUND ROD

- Single cable to top of ground rod. Concentric strand copper cable unless otherwise noted. For copper clad, galvanized, stainless clad or stainless steel ground rods.
- **Bold letter** in mold part number is the price key.

REQUIRED TOOLS

Handle Clamps L160 for **C** Price Key Molds
*Clamps are included with **T** and **P** Price Key Molds*

Flint Ignitor **T320** *(Included with Handle Clamp or frame but also available separately)*

SUGGESTED TOOLS

Cable Cleaning Brush	T313 or T314
Slag Removal Spade	B136A or B136B
Mold Cleaning Brush	T394
File	T329
Cable Clamp	B265
Torch Head	T111

ACCESSORIES

See Section A

GROUND ROD SIZE	CABLE SIZE	MOLD PART NUMBER			WELD METAL
		Steel	Copper Clad Plain (unthreaded)	Copper Clad Sectional (with 9/16" threads)	
1/2"	6	GR**T**-14C1H	GR**T**-14A1H	GR**T**-14B1H	25
	6 SOL	GR**T**-14C1G	GR**T**-14A1G	GR**T**-14B1G	25
	4	GR**T**-14C1L	GR**T**-14A1L	GR**T**-14B1L	25
	4 SOL	GR**T**-14C1K	GR**T**-14A1K	GR**T**-14B1K	25

		Steel or Copper Clad Sectional (with 9/16" threads)	Copper Clad Plain (unthreaded)	Copper Clad Sectional (with 1/2" threads)	
1/2"	2	GR**C**-141V	GR**C**-151V	GR**C**-131V	65
	1	GR**C**-141Y	GR**C**-151Y	GR**C**-131Y	65
	1/0	GR**C**-142C	GR**C**-152C	GR**C**-132C	90
	1/0 SOL	GR**C**-142B	GR**C**-152B	GR**C**-132B	90
	2/0	GR**C**-142G	GR**C**-152G	GR**C**-132G	90
	3/0	GR**C**-142L	GR**C**-152L	GR**C**-132L	90
	4/0	GR**C**-142Q	GR**C**-152Q	GR**C**-132Q	90
	250	GR**C**-142V	GR**C**-152V	GR**C**-132V	90
	300	GR**C**-143A	GR**C**-153A	GR**C**-133A	90

Ph: 1-800-677-9089
www.erico.com

GROUND ROD SIZE	CABLE SIZE	MOLD PART NUMBER Copper Clad Plain (unthreaded)	MOLD PART NUMBER Steel or Copper Clad Sectional (threaded)	WELD METAL
5/8"	6	GRT-161H	GRT-311H	32
	6 SOL	GRT-161G	GRT-311G	32
	4	GRT-161L	GRT-311L	32
	4 SOL	GRT-161K	GRT-311K	32

		Copper Clad Sectional (threaded) or Plain	Steel	
5/8"	2	GRC-161V	GRC-311V	65
	1	GRC-161Y	GRC-311Y	65
	1/0	GRC-162C	GRC-312C	90
	1/0 SOL	GRC-162B	GRC-312B	90
	2/0	GRC-162G	GRC-312G	90
	3/0	GRC-162L	GRC-312L	90
	4/0	GRC-162Q	GRC-312Q	90
	250	GRC-162V	GRC-312V	90
	300	GRC-163A	GRC-313A	115
	350	GRC-163D	GRC-313D	115
	500	GRC-163Q	GRC-313Q	150

		Copper Clad Plain (unthreaded)	Steel or Copper Clad Sectional (threaded)	
3/4"	6	GRT-181H	GRT-331H	32
	6SOL	GRT-181G	GRT-331G	32
	4	GRP-181L	GRP-331L	45
	4 SOL	GRP-181K	GRP-331K	45

		Copper Clad Sectional (threaded) or Plain	Steel	
3/4"	2	GRC-181V	GRC-33IV	90
	1	GRC-181Y	GRC-331Y	90
	1/0	GRC-182C	GRC-332C	90
	1/0 SOL	GRC-182B	GRC-332B	90
	2/0	GRC-182G	GRC-332G	90
	3/0	GRC-182L	GRC-332L	90
	4/0	GRC-182Q	GRC-332Q	90
	250	GRC-182V	GRC-332V	90
	300	GRC-183A	GRC-333A	115
	350	GRC-183D	GRC-333D	115
	500	GRC-183Q	GRC-333Q	150
1"	CONTACT ERICO FOR ORDERING INFORMATION			

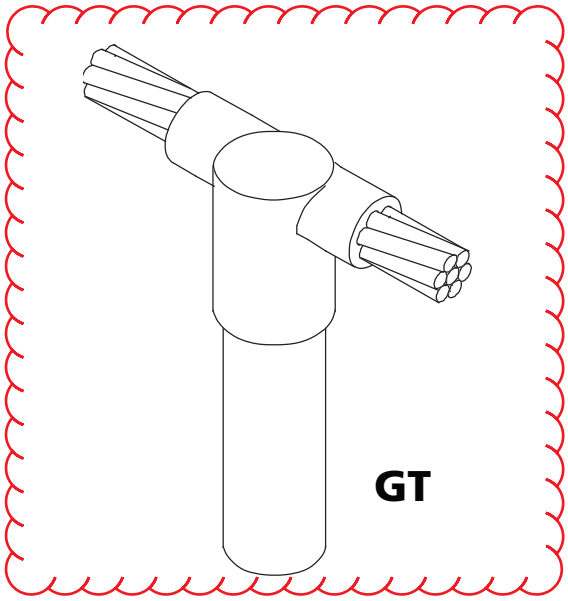

THROUGH CABLE TO GROUND ROD

- Through cable to top of ground rod. Connections are for concentric strand copper cable unless otherwise noted. For copper clad, galvanized, stainless clad or stainless steel ground rods.
- **Bold letter** in mold part number is the price key.

REQUIRED TOOLS

Handle Clamps L160 for **C** Price Key Molds
*Clamps are included with **T** or **P** Price Key Molds*

Flint Ignitor **T320** *(Included with Handle Clamp or frame but also available separately)*

SUGGESTED TOOLS

Cable Cleaning Brush	T313 or T314
Slag Removal Spade	B136A or B136B
Mold Cleaning Brush	T394
File	T329
Torch Head	T111

ACCESSORIES

See Section A

GROUND ROD SIZE	CABLE SIZE	MOLD PART NUMBER			WELD METAL
		Steel	Copper Clad Plain (unthreaded)	Copper Clad Sectional (with 9/16" threads)	
1/2"	6	GT**T**-14C1H	GT**T**-14A1H	GT**T**-14B1H	32
	6 SOL	GT**T**-14C1G	GT**T**-14A1G	GT**T**-14B1G	32
	4	GT**T**-14C1L	GT**T**-14A1L	GT**T**-14B1L	32
	4 SOL	GT**T**-14C1K	GT**T**-14A1K	GT**T**-14B1K	32

		Steel or Copper Clad Sectional (with 9/16" threads)	Copper Clad Plain (unthreaded)	Copper Clad Sectional (with 1/2" threads)	
1/2"	2	GT**C**-141V	GT**C**-151V	GT**C**-131V	90
	1	GT**C**-141Y	GT**C**-151Y	GT**C**-131Y	90
	1/0	GT**C**-142C	GT**C**-152C	GT**C**-132C	90
	1/0 SOL	GT**C**-142B	GT**C**-152B	GT**C**-132B	90
	2/0	GT**C**-142G	GT**C**-152G	GT**C**-132G	90
	3/0	GT**C**-142L	GT**C**-152L	GT**C**-132L	115
	4/0	GT**C**-142Q	GT**C**-152Q	GT**C**-132Q	115
	250	GT**C**-142V	GT**C**-152V	GT**C**-132V	150
	300	GT**C**-143A	GT**C**-153A	GT**C**-133A	200

Ph: 1-800-677-9089
www.erico.com

GROUND ROD SIZE	CABLE SIZE	MOLD PART NUMBER Copper Clad Plain (unthreaded)	MOLD PART NUMBER Steel or Copper Clad Sectional (threaded)	WELD METAL
5/8"	6	GTT-161H	GTT-311H	32
	6 SOL	GTT-161G	GTT-311G	32
	4	GTT-161L	GTT-311L	32
	4 SOL	GTT-161K	GTT-311K	32

		Copper Clad Sectional (threaded) or Plain	Steel	
5/8"	2	GTC-161V	GTC-311V	90
	1	GTC-161Y	GTC-311Y	90
	1/0	GTC-162C	GTC-312C	90
	1/0 SOL	GTC-162B	GTC-312B	115
	2/0	GTC-162G	GTC-312G	115
	3/0	GTC-162L	GTC-312L	115
	4/0	GTC-162Q	GTC-312Q	115
	250	GTC-162V	GTC-312V	150
	300	GTC-163A	GTC-313A	200
	350	GTC-163D	GTC-313D	200
	500	GTC-163Q	GTC-313Q	250

		Copper Clad Plain (unthreaded)	Steel or Copper Clad Sectional (threaded)	
3/4"	6	GTP-181H	GTP-331H	45
	6 SOL	GTP-181G	GTP-331G	45
	4	GTP-181L	GTP-331L	65
	4 SOL	GTP-181K	GTP-331K	65

		Copper Clad Sectional (threaded) or Plain	Steel	
3/4"	2	GTC-181V	GTC-33IV	90
	1	GTC-181Y	GTC-331Y	90
	1/0	GTC-182C	GTC-332C	115
	1/0 SOL	GTC-182B	GTC-332B	115
	2/0	GTC-182G	GTC-332G	115
	3/0	GTC-182L	GTC-332L	115
	4/0	GTC-182Q	GTC-332Q	115
	250	GTC-182V	GTC-332V	150
	300	GTC-183A	GTC-333A	200
	350	GTC-183D	GTC-333D	200
	500	GTC-183Q	GTC-333Q	250
1"	CONTACT ERICO FOR ORDERING INFORMATION			

MOLD CARE AND USE

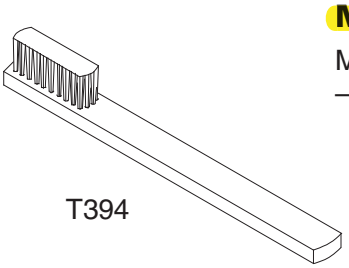

T394

Mold Cleaning Brush

Mold cleaning brush T394 should be used to remove slag from molds – especially vertical split molds.

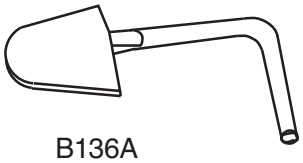

B136A
B136B

Slag Removal Spades

Slag Removal Spades are useful for removing the slag after making a CADWELD Connection – especially useful with horizontally split molds.

Slag Spade Part No.	Use With Price Key Mold	Using Weld Metal Size
B136-A	A,C, & R	#65 & Smaller
B136-B	C,D,F & R	#90 & Larger

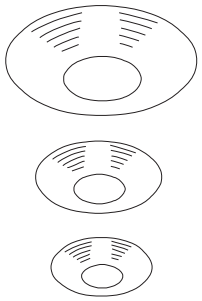

Disks

Each time a weld is made, a new disk is required. The disk sits on the bottom of the crucible. Its purpose is to hold the powdered weld metal until the reaction takes place. The slag produced by the reaction rises to the surface and the molten copper settles to the bottom of the crucible where it melts the disk and flows over the conductors to produce a permanent molecular bond.

Disks are available in three sizes:

B117A used in molds using #15 thru #32 weld metal (3/4" diameter).

B117B used in molds using #45 thru #115 weld metal (1" diameter).

B117C used in molds using #150 thru #500 weld metal (1-1/2" diameter).

Disks are included with the Weld Metal.

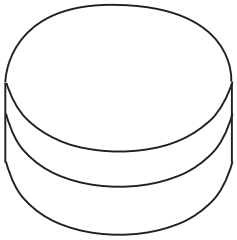

T328D

Disk Kit

A disk container (T328) which includes 20 of each of the three sizes of steel disks is available for your convenience. Kit Part No. T328D.

MOLD CARE AND USE (cont.)

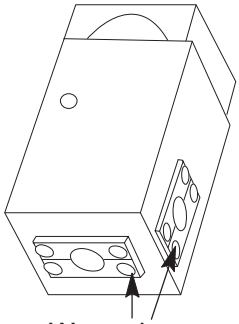

Wear Plates

Wear plates reduce mechanical abrasion of molds at cable entry points and help prevent leakage of molten metal (particularly on larger 7 strand conductor). These features prolong mold life.

Most CADWELD Molds are available with factory-mounted wear plates for the following sizes:

Copper Cable: 1/0 AWG thru 500 Kcmil
DSA Copperweld: 7/#10 thru 19/#6
Ground Rods: 1/2" thru 1"

To order WEAR PLATES, specify: Mold Part No. followed by the suffix "-W" i.e., TAC-2Q2Q-W.

Not available with types HA, HB, HC, LJ, certain PTs & PCs, RR, VB, VF, VG, VN, XA, XBQ or XBZ.

Following are the number of wear plates (W.P.) used on the various mold types listed in this catalog.

TYPE	W.P.	TYPE	W.P.	TYPE	W.P.
GB	1	HT	2	RC	2
GB-GR	2	LA	1	RD	2
GB-GT	3	LE	2	SS	2
GL	1	LL	1*	TA	3
GR	2	PC	3**	VS	1
GT	3	PT	4**	VT	2
GY	3	RA	1	VV	1
HS	1	RB	2	XB	4

* Available only on molds for 2" and narrower bus size.
** Available only on mold for 1/0 (or 7/#10) and larger run and tap.

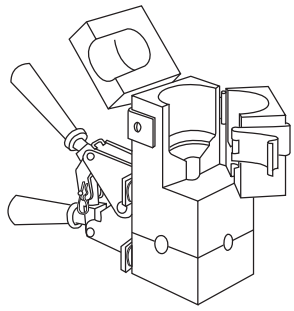

Split Crucible Molds

Molds made with a horizontal opening and solid crucible section may be specified as a SPLIT CRUCIBLE TYPE. The advantage of the SPLIT CRUCIBLE MOLD is easier cleaning, but lead times are longer.

To order a SPLIT CRUCIBLE TYPE specify: Mold Part No. followed by the suffix "L" i.e., TAC2Q2QL.

Available in Type TA, XA, XB (C & D mold price only), LE and LJ connections.

MOLD FASTENING AND MOUNTING

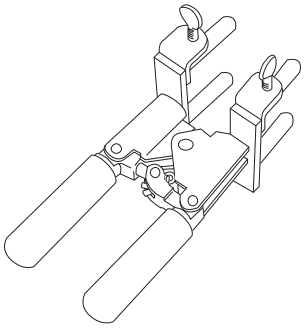

CADWELD Handle Clamps

Handle clamps such as the one shown are required for most molds. Specialized frames with handles are used on some molds. Flint ignitors are included with all handle clamps. The following handle clamps are most widely used.

1. L160 for all molds having a "C", "E", "Q" or "R" mold price listing. (3" wide molds)

2. L159 for all molds having a "D", "F", "J" or "Z" mold price listing (4" wide molds)

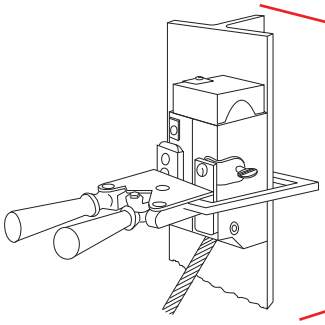

Vertical Surface Mold Support

The CADWELD Mold can be securely held to a vertical "H" column or angle by using the Vertical Surface Mold Support. It is easily attached to an existing L159 or L160 Handle Clamp. For use with Types VB, VG, VN, and VS molds, fits steel up to 1" thick, for Type VF mold, 3/4" thick.

B134: For use with L160 E-Z CHANGE Handle Clamp
B135: For use with L159 E-Z CHANGE Handle Clamp

Chain Support Handle Clamps

The CADWELD mold can be securely held to a pipe using the clamp assembly consisting of a modified L159 or L160 Handle Clamp with built-in Pipe Attachment.

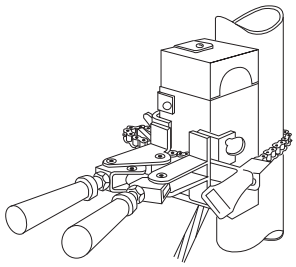

Clamp Part No.	Fits Mold Price	For Following Connection Types	Pipe
B159V	D & F	VS,VF,VB, & VV	Vertical
B160V	C & R	VS,VF,VB, & VV	Vertical
B159VT	D & F	VT	Vertical
B160VT	C & R	VT	Vertical
B159H	D & F	HA,HS,HC, & HT	Horizontal
B160H	C & R	HA,HS,HC, & HT	Horizontal

The above clamps are equipped with 20" length of chain which will fit up to 4" pipes. Extra 20" length of chain, B158, is available to fit up to 10" pipes.

Ph: 1-800-677-9089
www.erico.com

Specification Grade Insulated Grounding Bushings

For Threaded Rigid Conduit & IMC

Type ABLG & Type RBLG

Copper Plus™ Lay-In-Lug™

Use:
To provide a compact means of grounding conduit through an Insulated Bushing.
To protect insulated conductors from abrasion during pulling and mechanical vibration.
To provide voltage gradient between line conductors and ground at point of electrical and mechanical stress on conductor insulation.

Features:
- Tin plated copper saddle for use with copper or aluminum conductors from #8 to 4/0.
- Copper conductor only for #14-4 lug and 250-500 lug.
- Allows easy insertion of grounding conductor for thru or end connection.
- Low grounding connector profile.
- Spring action design maintains positive firm contact on grounding conductor.
- Set screw provides fixed alignment and positive ground continuity.
- Phenolic insulation, with 150°C U.L. rating, molded on over metallic conduit stop will not shatter or shrink at sub-zero temperatures.
- Lugs not sold separately.

Material/Finish:
Type ABLG Aluminum Bushing with Stainless Steel screws
Type RBLG Bronze Bushing with Stainless Steel screws

Options:
Type ABLG grounding bushings are also available for threadless conduit in bronze and/or aluminum. Specify: Type RSBLG for bronze bushings or Type ASBLG for aluminum bushings. Contact your local representative for pricing and availability.

Third Party Certification:
UL Listed: E-24264
CSA Certified: 015978

Applicable Third Party Standards:
UL Standard: 514B, 467
CSA Standard: C22.2 No. 41
Fed. Spec: W-F-408E
NEMA: FB-1

Suggested Specifications:
O-Z/Gedney Type BLG insulated Lay-In-Lug grounding bushings with tin-plated copper grounding path shall be used on all feeder raceways and bushings shall have integrally molded noncombustible phenolic insulated surfaces rated 150°C.

Notes:
1 Caps to prevent entry of foreign matter into conduit prior to pulling cables are available. See Type PPC on Page DB1.

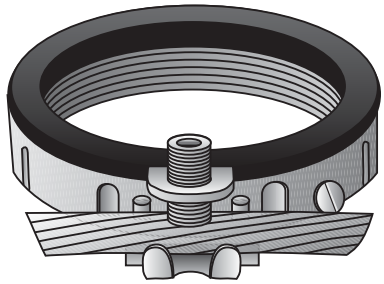

Type ABLG
Threaded

PATENTED

Trade Size (inches)	Copper Free Aluminum Catalog Number	Bronze Catalog Number	Grounding Wire Size* Min.	Grounding Wire Size* Max.	Dimensions in Inches: Max. Dia. without lug	Max. Ht.	Turning Radius with lug
~~½~~	~~ABLG-0504~~	~~RBLG-0504~~	~~14~~	~~4~~	~~1⅛~~	~~½~~	~~1⅛~~
~~½~~	~~ABLG-0522~~	~~RBLG-0522~~	~~8~~	~~2/0~~	~~1⅛~~	~~½~~	~~1½~~
¾	ABLG-0704	RBLG-0704	14	4	1¾	⅝	1¼
¾	ABLG-0722	RBLG-0722	8	2/0	1⅜	⅝	1½
1	ABLG-1104	RBLG-1104	14	4	1⅝	¾	1⅜
1	ABLG-1122	RBLG-1122	8	2/0	1⅝	¾	1⅝
1¼	ABLG-1204	RBLG-1204	14	4	2	¾	1½
1¼	ABLG-1222	RBLG-1222	8	2/0	2	¾	1¾
1½	ABLG-1504	RBLG-1504	14	4	2¼	¾	1⅝
1½	ABLG-1522	RBLG-1522	8	2/0	2¼	¾	1⅞
2	ABLG-2004	RBLG-2004	14	4	2¾	⅞	2
2	ABLG-2022	RBLG-2022	8	2/0	2¾	⅞	2¼
2½	ABLG-2604	RBLG-2604	14	4	3¼	1	2⅛
2½	ABLG-2622	RBLG-2622	8	2/0	3¼	1	2½
2½	ABLG-2624	RBLG-2624	6	4/0	3¼	1	2¾
2½	--	RBLG-2650	250	500	3¼	1	3 7/16
3	ABLG-3104	RBLG-3104	14	4	4	1	2½
3	ABLG-3122	RBLG-3122	8	2/0	4	1	2¾
3	ABLG-3124	RBLG-3124	6	4/0	4	1	3⅛
3	--	RBLG-3150	250	500	4	1	3¾
3½	ABLG-3604	RBLG-3604	14	4	4½	1	2¾
3½	ABLG-3622	RBLG-3622	8	2/0	4½	1	3
3½	ABLG-3624	RBLG-3624	6	4/0	4½	1	3⅜
3½	--	RBLG-3650	250	500	4½	1	4
4	ABLG-4104	RBLG-4104	14	4	5	1⅛	3
4	ABLG-4122	RBLG-4122	8	2/0	5	1⅛	3⅝
4	ABLG-4124	RBLG-4124	6	4/0	5	1⅛	3⅝
4	--	RBLG-4150	250	500	5	1⅛	4¼
5	ABLG-5104	RBLG-5104	14	4	6¼	1¼	3¾
5	ABLG-5122	RBLG-5122	8	2/0	6¼	1¼	4
5	ABLG-5124	RBLG-5124	6	4/0	6¼	1¼	4¼
5	--	RBLG-5150	250	500	6¼	1¼	5
6	ABLG-6104	RBLG-6104	14	4	7⅜	1⅜	4¼
6	ABLG-6122	RBLG-6122	8	2/0	7⅜	1⅜	4½
6	ABLG-6124	RBLG-6124	6	4/0	7⅜	1⅜	4⅞
6	--	RBLG-6150	250	500	7⅜	1⅜	5 7/16

*Solid or stranded for No. 4 awg or smaller; stranded for No. 2 or larger. Copper conductor only for #14-4 lug and 250-500 mcm lug.

Copyright 2007

BROOKS PRODUCTS
2001 W. Mayfield Road
Arlington, TX 76015
PHONE: (817) 465-0080
(817) 467-2783 Metro
FAX: (817) 472-6184

VALVE BOX
3-RT 10¼" DIA.

No. 3-RT C.I. Cover

Weight - 12 Lbs.
Item# - 400260

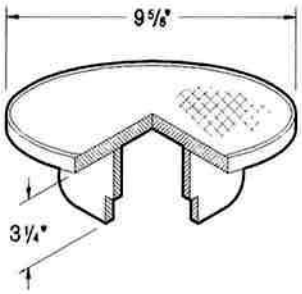

Cover May Be Marked :

1) "Ground Rod"
2) Blank

No. 3-RT Body

Weight - 43 Lbs.
Item# - 001010

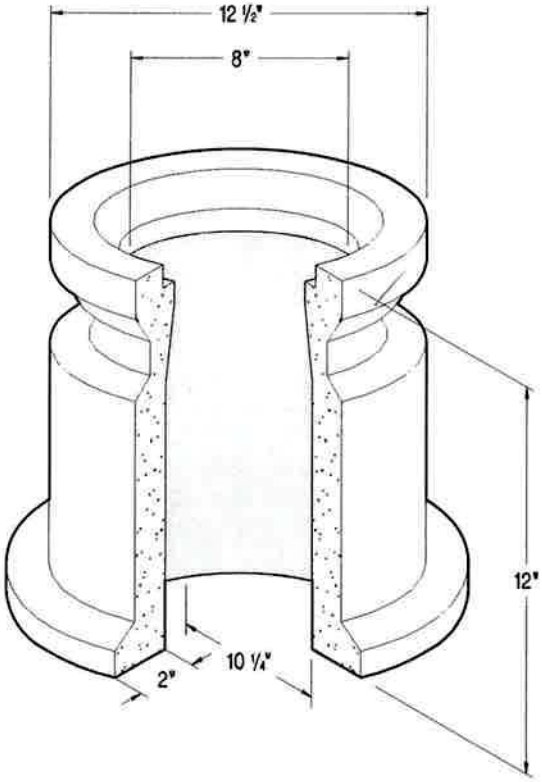

SPECIFICATIONS :

Concrete : Concrete has a design strength of 5500 PSI at 28 days.
Reinforcement : WWF
C.I. Castings : ASTM A 48 Class 30/35

Date :	Scale :	Drawing No. :	Rev.
11/24/97	None	VB-3RT	A

Oldcastle® Precast, Inc.

All Rights Reserved

Identoline® Underground Warning Tape

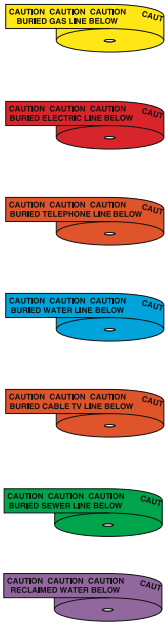

- Made of heavy-duty B-720 polyethylene material
- Resists acid, alkalis and other soil substances
- Tape is 4.0 mil. thick with a tough tensile strength of 1750 psi
- Easily identified - APWA (American Public Works Association) color coding
- Overcoated graphics provide long-lasting legibility and hold color values
- Economical - compared to the cost of line damage, Identoline® tape is cost-effective for use over the entire length of the line
- Available in seven utility classes in corresponding APWA colors
- Roll size: 6" x 1,000 ft.
- Standard package: one roll

Identoline® Underground Warning Tape is buried 12" to 18" below ground level. Digging crews receive warning of buried lines and cables, allowing a margin of safety between the tape and the buried line.

Utility Class	APWA Color	Size W X L	Catalog Number
Cable T.V.	Orange	6" x 1,000 ft.	63009
Reclaimed Water	Purple	6" x 1,000 ft.	63050
Gas	Yellow	6" x 1,000 ft.	91294
Electric*	Red	3" x 1,000 ft.	91295
Electric	Red	6" x 1,000 ft.	91296
Telephone	Orange	6" x 1,000 ft.	91297
Water	Blue	6" x 1,000 ft.	91298
Sewer	Green	6" x 1,000 ft.	91299

Detectable Identoline® Warning Tape

Detectable Identoline® tape minimizes time spent locating buried lines thus reducing field costs. The tape is buried 4" to 6" below the surface for maximum detectability.

- Made of tough B-721 metal detectable polyester material
- Subsurface graphics seal the legend from acids, alkalis and other soil substances
- Easily identified - sharply printed legend on APWA color-coded background
- OSHA approved - meets OSHA regulation 1926.956(c)(1) covering location or underground utility lines
- Cost-effective - detectability feature minimizes line locating time and needless digging expenses. Utility/contractor liability is reduced and expensive line damage is averted
- Easily installed - may be manually or automatically installed
- Available in five utility classes in corresponding APWA colors
- Foil is 4.5 mils
- Roll size: 2" x 1,000 ft.
- Standard package: one roll

Subsurface Printed Polyester ▸
Aluminum Foil Core ▸
Polyester Underlaminate ▸

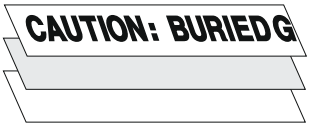

Utility Class	APWA Color	Size W X L	Catalog Number
Gas	Yellow	2" x 1,000 ft.	91600
Electric	Red	2" x 1,000 ft.	91601
Water	Blue	2" x 1,000 ft.	91603
Sewer	Green	2" x 1,000 ft.	91604
Fiber Optic	Orange	2" x 1,000 ft.	91606