IMPORTANT NOTICE

Act now to keep your code up-to-date. The purchase of this code includes a free subscription for all State-issued supplements and errata. To receive these important updates through 2022, you **MUST** register online **www.iccsafe.org/CAL19**

2019 CALIFORNIA RESIDENTIAL CODE

CALIFORNIA CODE OF REGULATIONS TITLE 24, PART 2.5

Based on the 2018 International Residential Code®

California Building Standards Commission

CBSC

ICC INTERNATIONAL CODE COUNCIL®

Effective January 1, 2020

For Errata and Supplement effective dates see the History Note Appendix

2019 California Residential Code
California Code of Regulations, Title 24, Part 2.5

First Printing: July 2019

ISBN: 978-1-60983-892-8

COPYRIGHT © 2019
by
INTERNATIONAL CODE COUNCIL, INC.

ALL RIGHTS RESERVED. This 2019 *California Residential Code* contains substantial copyrighted material from the 2018 *International Residential Code*, which is a copyrighted work owned by the International Code Council, Inc. Without advance written permission from the copyright owner, no part of this book may be reproduced, distributed or transmitted in any form or by any means, including, without limitation, electronic, optical or mechanical means (by way of example and not limitation, photocopying, or recording by or in an information storage retrieval system). For information on use rights and permissions please contact: ICC Publications, 4051 Flossmoor Road, Country Club Hills, IL 60478. Phone 1-888-ICC-SAFE (422-7233).

Trademarks: "International Code Council," the "International Code Council" logo, "ICC," the "ICC" logo, "International Residential Code," "IRC" and other names and trademarks appearing in this book are registered trademarks of the International Code Council, Inc., and/or its licensors (as applicable), and may not be used without permission.

PRINTED IN THE USA

T023953

PREFACE

This document is Part 2.5 of thirteen parts of the official triennial compilation and publication of the adoptions, amendments and repeal of administrative regulations to *California Code of Regulations, Title 24,* also referred to as the *California Building Standards Code.* This part is known as the *California Residential Code.*

The *California Building Standards Code* is published in its entirety every three years by order of the California legislature, with supplements published in intervening years. The California legislature delegated authority to various state agencies, boards, commissions and departments to create building regulations to implement the State's statutes. These building regulations, or standards, have the same force of law, and take effect 180 days after their publication unless otherwise stipulated. The *California Building Standards Code* applies to occupancies in the State of California as annotated.

A city, county, or city and county may establish more restrictive building standards reasonably necessary because of local climatic, geological or topographical conditions. Findings of the local condition(s) and the adopted local building standard(s) must generally be filed with the California Building Standards Commission (or other filing if indicated) to become effective, and may not be effective sooner than the effective date of this edition of the *California Building Standards Code.* Local building standards that were adopted and applicable to previous editions of the *California Building Standards Code* do not apply to this edition without appropriate adoption and the required filing.

Should you find publication (e.g., typographical) errors or inconsistencies in this code or wish to offer comments toward improving its format, please address your comments to:

California Building Standards Commission
2525 Natomas Park Drive, Suite 130
Sacramento, CA 95833–2936

Phone: (916) 263–0916
Email: cbsc@dgs.ca.gov

Web page: www.dgs.ca.gov/bsc

ACKNOWLEDGEMENTS

The 2019 *California Building Standards Code* (Code) was developed through the outstanding collaborative efforts of the Department of Housing and Community Development, Division of State Architect, Office of the State Fire Marshal, Office of Statewide Health Planning and Development, California Energy Commission, California Department of Public Health, California State Lands Commission, Board of State and Community Corrections, and the California Building Standards Commission (Commission).

This collaborative effort included the assistance of the Commission's Code Advisory Committees and many other volunteers who worked tirelessly to assist the Commission in the production of this Code.

Governor Edmund G. Brown Jr.

Members of the California Building Standards Commission

Secretary Marybel Batjer – Chair
Steven Winkel – Vice-Chair

James Barthman — *Larry Booth*
Erick Mikiten — *Elley Klausbruckner*
Rajesh Patel — *Juvilyn Alegre*
Peter Santillan — *Kent Sasaki*

Mia Marvelli – Executive Director
Michael L. Nearman – Deputy Executive Director

For questions on California state agency amendments, please refer to the contact list on page iv.

CALIFORNIA CODE OF REGULATIONS, TITLE 24

California Agency Information Contact List

The following state agencies may propose building standards for publication in Title 24. Request notice of such activity with each agency of interest. See Sections 1.2 through 1.14 of the California Building Code (Part 2 of Title 24) for more detailed information on the regulatory jurisdiction of each state agency.

> ***Board of State and Community Corrections***

www.bscc.ca.gov ..... (916) 445-5073

Local Adult and Juvenile Detention Facility Standards

California Building Standards Commission

www.dgs.ca.gov/bsc ..... (916) 263-0916

State Buildings including UC and CSU Buildings, Parking Lot and Walkway Lighting, Green Building Standards for Non-residential Buildings

California Energy Commission

*www.energy.ca.gov ..... **Energy Hotline** (800) 772-3300*

Building Efficiency Standards
Appliance Efficiency Standards
Compliance Manual/Forms

California State Lands Commission

www.slc.ca.gov ..... (562) 499-6312

Marine Oil Terminal Standards

California State Library

www.library.ca.gov ..... (916) 323-9843

Department of Consumer Affairs:

Acupuncture Board
www.acupuncture.ca.gov ..... (916) 515-5200

Office Standards

Board of Pharmacy
www.pharmacy.ca.gov ..... (916) 574-7900

Pharmacy Standards

Bureau of Barbering and Cosmetology
www.barbercosmo.ca.gov ..... (800) 952-5210

Barber and Beauty Shop, and College Standards

Bureau of Household Goods and Services
www.bhgs.dca.ca.gov ..... (916) 999-2041

Insulation Testing Standards

Structural Pest Control Board
www.pestboard.ca.gov ..... (800) 737-8188

Structural Standards

Veterinary Medical Board
www.vmb.ca.gov ..... (916) 515-5220

Veterinary Hospital Standards

Department of Food and Agriculture

www.cdfa.ca.gov

Meat & Poultry Packing Plant Standards
Rendering & Collection Center Standards ..... (916) 900-5004

Dairy Standards ..... (916) 900-5008

Department of Housing and Community Development

www.hcd.ca.gov ..... (916) 445-9471

Residential—Hotels, Motels, Apartments, Single-Family Dwellings; and Permanent Structures in Mobilehome & Special Occupancy Parks

(916) 445-3338
Factory-Built Housing, Manufactured Housing & Commercial Modular

Mobilehome—Permits & Inspections
Northern Region–(916) 255-2501
Southern Region–(951) 782-4420

(916) 445-9471
Employee Housing Standards

Department of Public Health

www.dph.ca.gov ..... (916) 449-5661

Organized Camps Standards
Public Swimming Pools Standards

Division of the State Architect

www.dgs.ca.gov/dsa ..... (916) 445-8100

Access Compliance

Fire and Life Safety

Structural Safety

Public Schools Standards
Essential Services Building Standards
Community College Standards

State Historical Building Safety Board

Historical Rehabilitation, Preservation, Restoration or Relocation Standards <

Office of Statewide Health Planning and Development

www.oshpd.ca.gov ..... (916) 440-8356

Hospital Standards
Skilled Nursing Facility Standards & Clinic Standards <

Office of the State Fire Marshal

osfm.fire.ca.gov ..... (916) 568-3800

Code Development and Analysis
Fire Safety Standards

How to Distinguish Between Model Code Language and California Amendments

To distinguish between model code language and the incorporated California amendments, including exclusive California standards, California amendments will appear in italics.

***[BSC]** This is an example of a state agency acronym used to identify an adoption or amendment by the agency. The acronyms will appear at California Amendments and in the Matrix Adoption Tables. Sections 1.2 through 1.14 in Chapter 1, Division 1 of this code, explain the used acronyms, the application of state agency adoptions to building occupancies or building features, the enforcement agency as designated by state law (may be the state adopting agency or local building or fire official), the authority in state law for the state agency to make the adoption, and the specific state law being implemented by the agency's adoption. The following acronyms are used in Title 24 to identify the state adopting agency making an adoption.*

Legend of Acronyms of Adopting State Agencies

BSC	*California Building Standards Commission (see Section 1.2)*
BSC-CG	*California Building Standards Commission-CALGreen (see Section 1.2.2)*
BSCC	*Board of State and Community Corrections (see Section 1.3)*
SFM	*Office of the State Fire Marshal (see Section 1.11)*
HCD 1	*Department of Housing and Community Development (see Section 1.8.2.1.1)*
HCD 2	*Department of Housing and Community Development (see Section 1.8.2.1.3)*
HCD 1/AC	*Department of Housing and Community Development (see Section 1.8.2.1.2)*
DSA-AC	*Division of the State Architect-Access Compliance (see Section 1.9.1)*
DSA-SS	*Division of the State Architect-Structural Safety (see Section 1.9.2)*
DSA-SS/CC	*Division of the State Architect-Structural Safety/Community Colleges (see Section 1.9.2.2)*
OSHPD 1	*Office of Statewide Health Planning and Development (see Section 1.10.1)*
OSHPD 1R	*Office of Statewide Health Planning and Development (see Section 1.10.1)*
OSHPD 2	*Office of Statewide Health Planning and Development (see Section 1.10.2)*
OSHPD 3	*Office of Statewide Health Planning and Development (see Section 1.10.3)*
OSHPD 4	*Office of Statewide Health Planning and Development (see Section 1.10.4)*
OSHPD 5	*Office of Statewide Health Planning and Development (see Section 1.10.5)*
DPH	*Department of Public Health (see Section 1.7)*
AGR	*Department of Food and Agriculture (see Section 1.6)*
CEC	*California Energy Commission (see Section 100 in Part 6, the California Energy Code)*
CA	*Department of Consumer Affairs (see Section 1.4):* *Board of Barbering and Cosmetology* *Board of Examiners in Veterinary Medicine* *Board of Pharmacy* *Acupuncture Board* *Bureau of Household Goods & Services* *Structural Pest Control Board (SPCB)*
SL	*State Library (see Section 1.12)*
SLC	*State Lands Commission (see Section 1.14)*
DWR	*Department of Water Resources (see Section 1.13 of Chapter 1 of the California Plumbing Code in Part 2 of Title 24)*

The state agencies are available to answer questions about their adoptions. Contact information is provided on page iv of this code.

To learn more about the use of this code refer to pages vii and viii. Training materials on the application and use of this code are available at the website of the California Building Standards Commission www.dgs.ca.gov/bsc.

California Matrix Adoption Tables

Format of the California Matrix Adoption Tables

The matrix adoption tables, examples of which follow, are non-regulatory aids intended to show the user which state agencies have adopted and/or amended given sections of the model code. An agency's statutory authority for certain occupancies or building applications determines which chapter or section may be adopted, repealed, amended or added. See Chapter 1, Division I, Sections 1.2 through 1.14 for agency authority, building applications and enforcement responsibilities.

The side headings identify the scope of state agencies' adoption as follows:

Adopt the entire IRC chapter without state amendments.

If there is an "X" under a particular state agency's acronym on this row; this means that particular state agency has adopted the entire model code chapter without any state amendments.

Example:

CALIFORNIA RESIDENTIAL CODE-MATRIX ADOPTION TABLE

(Matrix Adoption Tables are non-regulatory, intended only as an aid to the user.
See Chapter 1 for state agency authority and building applications.)

CHAPTER 2 – DEFINITIONS AND ABBREVIATIONS

Adopting agency	BSC	BSC-CG	SFM	HCD			DSA			OSHPD						BSCC	DPH	AGR	DWR	CA	SL	SLC
				1	2	1-AC	AC	SS	SS/CC	1	1R	2	3	4	5							
Adopt entire chapter			X																			
Adopt entire chapter as amended (amended sections listed below)																						
Adopt only those sections that are listed below								S	A	M	P	L	E									
Chapter/Section																						

Adopt the entire IRC chapter as amended, state-amended sections are listed below:

If there is an "X" under a particular state agency's acronym on this row, it means that particular state agency has adopted the entire model code chapter; with state amendments.

Each state-amended section that the agency has added to that particular chapter is listed. There will be an "X" in the column, by that particular section, under the agency's acronym, as well as an "X" by each section that the agency has adopted.

Example:

CHAPTER 2 – DEFINITIONS AND ABBREVIATIONS

Adopting agency	BSC	BSC-CG	SFM	HCD			DSA			OSHPD						BSCC	DPH	AGR	DWR	CA	SL	SLC
				1	2	1-AC	AC	SS	SS/CC	1	1R	2	3	4	5							
Adopt entire chapter																						
Adopt entire chapter as amended (amended sections listed below)			X																			
Adopt only those sections that are listed below								S	A	M	P	L	E									
Chapter 1																						
202			X																			

Adopt only those sections that are listed below:

If there is an "X" under a particular state agency's acronym on this row, it means that particular state agency is adopting only specific model code or state-amended sections within this chapter. There will be an "X" in the column under the agency's acronym, as well as an "X" by each section that the agency has adopted.

Example:

CHAPTER 2 – DEFINITIONS AND ABBREVIATIONS

Adopting agency	BSC	BSC-CG	SFM	HCD			DSA			OSHPD						BSCC	DPH	AGR	DWR	CA	SL	SLC
				1	2	1-AC	AC	SS	SS/CC	1	1R	2	3	4	5							
Adopt entire chapter																						
Adopt entire chapter as amended (amended sections listed below)																						
Adopt only those sections that are listed below					X	X		S	A	M	P	L	E									
Chapter 1																						
202					X	X		S	A	M	P	L	E									
202					X	X			C	O	N	T.										
203					X	X																
203					X	X																

Marginal Markings

Symbols in the margins indicate where changes have been made or language has been deleted.

|| This symbol indicates that a change has been made to a California amendment.

> This symbol indicates deletion of California amendment language.

| This symbol indicates that a change has been made to International Code Council model language.

➡ This symbol indicates deletion of International Code Council model language.

A single asterisk [*] placed in the margin indicates that text or a table has been relocated within the code. A double asterisk [**] placed in the margin indicates that the text or table immediately following it has been relocated there from elsewhere in the code. The following table indicates such relocations in the 2018 edition of the *International Residential Code*.

2018 LOCATION	2015 LOCATION
R703.3.1.2	R703.11.1.4

Maintenance

The *International Residential Code* is kept up-to-date through the review of proposed changes submitted by code enforcement officials, industry representatives, design professionals and other interested parties. Proposed changes are carefully considered through an open code development process in which all interested and affected parties may participate.

The ICC Code Development Process reflects principles of openness, transparency, balance, due process and consensus, the principles embodied in OMB Circular A-119, which governs the federal government's use of private-sector standards. The ICC process is open to anyone; there is no cost to participate, and people can participate without travel cost through the ICC's cloud-based app, cdpAccess®. A broad cross section of interests are represented in the ICC Code Development Process. The codes, which are updated regularly, include safeguards that allow for emergency action when required for health and safety reasons.

In order to ensure that organizations with a direct and material interest in the codes have a voice in the process, the ICC has developed partnerships with key industry segments that support the ICC's important public safety mission. Some code development committee members were nominated by the following industry partners and approved by the ICC Board:

- National Association of Home Builders (NAHB)
- National Council of Structural Engineers Association (NCSEA)

The code development committees evaluate and make recommendations regarding proposed changes to the codes. Their recommendations are then subject to public comment and council-wide votes. The ICC's governmental members—public safety officials who have no financial or business interest in the outcome—cast the final votes on proposed changes.

The contents of this work are subject to change through the code development cycles and by any governmental entity that enacts the code into law. For more information regarding the code development process, contact the Codes and Standards Development Department of the International Code Council.

The maintenance process for the fuel gas provisions is based on the process used to maintain the *International Fuel Gas Code*, in conjunction with the American Gas Association. The maintenance process for the electrical provisions is undertaken by the National Fire Protection Association.

While the I-Code development procedure is thorough and comprehensive, the ICC, its members and those participating in the development of the codes disclaim any liability resulting from the publication or use of the I-Codes, or from compliance or noncompliance with their provisions. The ICC does not have the power or authority to police or enforce compliance with the contents of this code.

Code Development Committee Responsibilities (Letter Designations in Front of Section Numbers)

In each code development cycle, proposed changes to the code are considered at the Committee Action Hearings by the applicable International Code Development Committee as follows:

[RB] = IRC—Building Code Development Committee

[RE] = International Residential Energy Conservation Code Development Committee;

[MP] = IRC—Mechanical/Plumbing Code Development Committee

The [RE] committee is also responsible for the IECC—Residential Provisions and Appendix T.

For the development of the 2021 edition of the I-Codes, there will be three groups of code development committees and they will meet in separate years. Note that these are tentative groupings.

Group A Codes (Heard in 2018, Code Change Proposals Deadline: January 8, 2018)	**Group B Codes (Heard in 2019, Code Change Proposals Deadline: January 7, 2019)**
International Building Code – Egress (Chapters 10, 11, Appendix E) – Fire Safety (Chapters 7, 8, 9, 14, 26) – General (Chapters 2–6, 12, 27–33, Appendices A, B, C, D, K, N)	Administrative Provisions (Chapter 1 of all codes except IECC, IRC and IgCC, administrative updates to currently referenced standards, and designated definitions)
International Fire Code	**International Building Code** – Structural (Chapters 15–25, Appendices F, G, H, I, J, L, M)
International Fuel Gas Code	**International Existing Building Code**
International Mechanical Code	**International Energy Conservation Code—Commercial**
International Plumbing Code	**International Energy Conservation Code—Residential** – IECC—Residential – IRC—Energy (Chapter 11)
International Property Maintenance Code	**International Green Construction Code** (Chapter 1)
International Private Sewage Disposal Code	**International Residential Code** – IRC—Building (Chapters 1–10, Appendices E, F, H, J, K, L, M, O, Q, R, S, T)
International Residential Code – IRC—Mechanical (Chapters 12–23) – IRC—Plumbing (Chapters 25–33, Appendices G, I, N, P)	
International Swimming Pool and Spa Code	
International Wildland-Urban Interface Code	
International Zoning Code	
Note: Proposed changes to the ICC *Performance Code*™ will be heard by the code development committee noted in brackets [ ] in the text of the ICC *Performance Code*™.	

Code change proposals submitted to Chapters 1 and 3 through 10, Appendices E, F, H, J, K, L, M, O, Q, R, S, T and Definitions designated [RB] of the *International Residential Code* are heard by the IRC—Building Committee during the Group B (2019) cycle code development hearing. Code change proposals submitted to Chapter 11 are heard by the International Energy Conservation Code Development Committee during the Group B (2019) cycle code development hearing. Proposed changes to all other chapters are heard by the IRC Plumbing and Mechanical Committee during the Group A (2018) code development cycle.

It is very important that anyone submitting code change proposals understand which code development committee is responsible for the section of the code that is the subject of the code change proposal. For further information on the code development committee responsibilities, please visit the ICC website at www.iccsafe.org/scoping.

EFFECTIVE USE OF THE INTERNATIONAL RESIDENTIAL CODE

Effective Use of the International Residential Code

The *International Residential Code*® (IRC®) was created to serve as a complete, comprehensive code regulating the construction of single-family houses, two-family houses (duplexes) and buildings consisting of three or more townhouse units. All buildings within the scope of the IRC are limited to three stories above grade plane. For example, a four-story single-family house would fall within the scope of the *International Building Code*® (IBC®), not the IRC. The benefits of devoting a separate code to residential construction include the fact that the user need not navigate through a multitude of code provisions that do not apply to residential construction in order to locate that which is applicable. A separate code also allows for residential and nonresidential code provisions to be distinct and tailored to the structures that fall within the appropriate code's scopes.

The IRC contains coverage for all components of a house or townhouse, including structural components, fireplaces and chimneys, thermal insulation, mechanical systems, fuel gas systems, plumbing systems and electrical systems.

The IRC is a prescriptive-oriented (specification) code with some examples of performance code language. It has been said that the IRC is the complete cookbook for residential construction. Section R301.1, for example, is written in performance language, but states that the prescriptive requirements of the code will achieve such performance.

It is important to understand that the IRC contains coverage for what is conventional and common in residential construction practice. While the IRC will provide all of the needed coverage for most residential construction, it might not address construction practices and systems that are atypical or rarely encountered in the industry. Sections such as R301.1.3, R301.2.2.1.1, R320.1, M1301.1, G2401.1 and P2601.1 refer to other codes either as an alternative to the provisions of the IRC or where the IRC lacks coverage for a particular type of structure, design, system, appliance or method of construction. In other words, the IRC is meant to be all inclusive for typical residential construction and it relies on other codes only where alternatives are desired or where the code lacks coverage for the uncommon aspect of residential construction. Of course, the IRC constantly evolves to address new technologies and construction practices that were once uncommon, but are now common.

The IRC is unique in that much of it, including Chapters 3 through 9 and Chapters 34 through 43, is presented in an ordered format that is consistent with the normal progression of construction, starting with the design phase and continuing through the final trim-out phase. This is consistent with the "cookbook" philosophy of the IRC.

The IRC is divided into eight main parts, specifically: Part I—Administration; Part II—Definitions; Part III—Building Planning and Construction; Part IV—Energy Conservation; Part V—Mechanical; Part VI—Fuel Gas; Part VII—Plumbing; and Part VIII—Electrical.

The following provides a brief description of the content of each chapter and appendix of the IRC:

Chapter 1 Scope and Administration. This chapter contains provisions for the application, enforcement and administration of subsequent requirements of the code. In addition to establishing the scope of the code, Chapter 1 identifies which buildings and structures come under its purview. Chapter 1 is largely concerned with maintaining "due process of law" in enforcing the building criteria contained in the body of the code. Only through careful observation of the administrative provisions can the building official reasonably expect to demonstrate that "equal protection under the law" has been provided.

Chapter 2 Definitions. Terms defined in the code are listed alphabetically in Chapter 2. It is important to note that two chapters have their own definitions sections: Chapter 11 for the defined terms unique to energy conservation, Chapter 24 for the defined terms that are unique to fuel gas and Chapter 35 containing terms that are applicable to electrical Chapters 34 through 43. Where Chapter 24 or 35 defines a term differently than it is defined in Chapter 2, the definition applies in that chapter only. Chapter 2 definitions apply in all other locations in the code.

Where understanding a term's definition is key to or necessary for understanding a particular code provision, the term is shown in italics where it appears in the code. This is true only for those terms that have a meaning that is unique to the code. In other words, the generally understood meaning of a term or phrase might not be sufficient or consistent with the meaning prescribed by the code; therefore, it is essential that the code-defined meaning be known.

Guidance regarding not only tense, gender and plurality of defined terms, but also terms not defined in this code, is provided.

Chapter 3 Building Planning. Chapter 3 provides guidelines for a minimum level of structural integrity, life safety, fire safety and livability for inhabitants of dwelling units regulated by this code. Chapter 3 is a compilation of the code requirements specific to the building planning sector of the design and construction process. This chapter sets forth code requirements dealing with light, ventilation, sanitation, minimum room size, ceiling height and environmental comfort. Chapter 3 establishes life-safety provisions including limitations on glazing used in hazardous areas, specifications on stairways, use of guards at elevated surfaces, window and fall protection, and rules for means of egress. Snow, wind and seismic design live and dead loads and flood-resistant construction, as well as solar energy systems, and swimming pools, spas and hot tubs, are addressed in this chapter.

Chapter 4 Foundations. Chapter 4 provides the requirements for the design and construction of foundation systems for buildings regulated by this code. Provisions for seismic load, flood load and frost protection are contained in this chapter. A foundation system consists of two interdependent components: the foundation structure itself and the supporting soil.

The prescriptive provisions of this chapter provide requirements for constructing footings and walls for foundations of wood, masonry, concrete and precast concrete. In addition to a foundation's ability to support the required design loads, this chapter addresses several other factors that can affect foundation performance. These include controlling surface water and subsurface drainage, requiring soil tests where conditions warrant and evaluating proximity to slopes and minimum depth requirements. The chapter also provides requirements to minimize adverse effects of moisture, decay and pests in basements and crawl spaces.

Chapter 5 Floors. Chapter 5 provides the requirements for the design and construction of floor systems that will be capable of supporting minimum required design loads. This chapter covers four different types: wood floor framing, wood floors on the ground, cold-formed steel floor framing and concrete slabs on the ground. Allowable span tables are provided that greatly simplify the determination of joist, girder and sheathing sizes for raised floor systems of wood framing and cold-formed steel framing. This chapter also contains prescriptive requirements for wood-framed exterior decks and their attachment to the main building.

Chapter 6 Wall Construction. Chapter 6 contains provisions that regulate the design and construction of walls. The wall construction covered in Chapter 6 consists of five different types: wood framed, cold-formed steel framed, masonry, concrete and structural insulated panel (SIP). The primary concern of this chapter is the structural integrity of wall construction and transfer of all imposed loads to the supporting structure. This chapter provides the requirements for the design and construction of wall systems that are capable of supporting the minimum design vertical loads (dead, live and snow loads) and lateral loads (wind or seismic loads). This chapter contains the prescriptive requirements for wall bracing and/or shear walls to resist the imposed lateral loads due to wind and seismic.

Chapter 6 also regulates exterior windows and doors installed in walls. This chapter contains criteria for the performance of exterior windows and doors and includes provisions for testing and labeling, garage doors, wind-borne debris protection and anchorage details.

Chapter 7 Wall Covering. Chapter 7 contains provisions for the design and construction of interior and exterior wall coverings. This chapter establishes the various types of materials, materials standards and methods of application permitted for use as interior coverings, including interior plaster, gypsum board, ceramic tile, wood veneer paneling, hardboard paneling, wood shakes and wood shingles. Chapter 7 also contains requirements for the use of vapor retarders for moisture control in walls.

Exterior wall coverings provide the weather-resistant exterior envelope that protects the building's interior from the elements. Chapter 7 provides the requirements for wind resistance and water-resistive barrier for exterior wall coverings. This chapter prescribes the exterior wall coverings as well as the water-resistive barrier required beneath the exterior materials. Exterior wall coverings regulated by this section include aluminum, stone and masonry veneer, wood, hardboard, particleboard, wood structural panel siding, wood shakes and shingles, exterior plaster, steel, vinyl, fiber cement and exterior insulation finish systems.

Chapter 8 Roof-ceiling Construction. Chapter 8 regulates the design and construction of roof-ceiling systems. This chapter contains two roof-ceiling framing systems: wood framing and cold-formed steel framing. Allowable span tables are provided to simplify the selection of rafter and ceiling joist size for wood roof framing and cold-formed steel framing. Chapter 8 also provides requirements for the application of ceiling finishes, the proper ventilation of concealed spaces in roofs (e.g., enclosed attics and rafter spaces), unvented attic assemblies and attic access.

Chapter 9 Roof Assemblies. Chapter 9 regulates the design and construction of roof assemblies. A roof assembly includes the roof deck, vapor retarder, substrate or thermal barrier, insulation, vapor retarder and roof covering. This chapter provides the requirement for wind resistance of roof coverings.

The types of roof covering materials and installation regulated by Chapter 9 are: asphalt shingles, clay and concrete tile, metal roof shingles, mineral-surfaced roll roofing, slate and slate-type shingles, wood shakes and shingles, built-up roofs, metal roof panels, modified bitumen roofing, thermoset and thermoplastic single-ply roofing, sprayed polyurethane foam roofing, liquid applied coatings and photovoltaic shingles. Chapter 9 also provides requirements for roof drainage, flashing, above deck thermal insulation, rooftop-mounted photovoltaic systems and recovering or replacing an existing roof covering.

Chapter 10 Chimneys and Fireplaces. Chapter 10 contains requirements for the safe construction of masonry chimneys and fireplaces and establishes the standards for the use and installation of factory-built chimneys, fireplaces and masonry heaters. Chimneys and fireplaces constructed of masonry rely on prescriptive requirements for the details of their construction; the factory-built type relies on the listing and labeling method of approval. Chapter 10 provides the requirements for seismic reinforcing and anchorage of masonry fireplaces and chimneys.

Chapter 11 [RE] Energy Efficiency. The purpose of Chapter 11 [RE] is to provide minimum design requirements that will promote efficient utilization of energy in buildings. The requirements are directed toward the design of building envelopes with adequate thermal resistance and low air leakage, and toward the design and selection of mechanical, water heating, electrical and illumination systems that promote effective use of depletable energy resources. The provisions of Chapter 11 [RE] are duplicated from the *International Energy Conservation Code—Residential Provisions*, as applicable for buildings which fall under the scope of the IRC.

For ease of use and coordination of provisions, the corresponding IECC—Residential Provisions section number is indicated following the IRC section number [e.g. N1102.1 (R402.1)].

Chapter 12 Mechanical Administration. Chapter 12 establishes the limits of applicability of the code and describes how the code is to be applied and enforced. A mechanical code, like any other code, is intended to be adopted as a legally enforceable document and it cannot be effective without adequate provisions for its administration and enforcement. The provisions of Chapter 12 establish the authority and duties of the code official appointed by the jurisdiction having authority and also establish the rights and privileges of the design professional, contractor and property owner. It also relates this chapter to the administrative provisions in Chapter 1.

Chapter 13 General Mechanical System Requirements. Chapter 13 contains broadly applicable requirements related to appliance listing and labeling, appliance location and installation, appliance and systems access, protection of structural elements and clearances to combustibles, among others.

Chapter 14 Heating and Cooling Equipment and Appliances. Chapter 14 is a collection of requirements for various heating and cooling appliances, dedicated to single topics by section. The common theme is that all of these types of appliances use energy in one form or another, and the improper installation of such appliances would present a hazard to the occupants of the dwellings, due to either the potential for fire or the accidental release of refrigerants. Both situations are undesirable in dwellings that are covered by this code.

Chapter 15 Exhaust Systems. Chapter 15 is a compilation of code requirements related to residential exhaust systems, including kitchens and bathrooms, clothes dryers and range hoods. The code regulates the materials used for constructing and installing such duct systems. Air brought into the building for ventilation, combustion or makeup purposes is protected from contamination by the provisions found in this chapter.

Chapter 16 Duct Systems. Chapter 16 provides requirements for the installation of ducts for supply, return and exhaust air systems. This chapter contains no information on the design of these systems from the standpoint of air movement, but is concerned with the structural integrity of the systems and the overall impact of the systems on the fire-safety performance of the building. This chapter regulates the materials and methods of construction which affect the performance of the entire air distribution system.

Chapter 17 Combustion Air. Complete combustion of solid and liquid fuel is essential for the proper operation of appliances, control of harmful emissions and achieving maximum fuel efficiency. If insufficient quantities of oxygen are supplied, the combustion process will be incomplete, creating dangerous byproducts and wasting energy in the form of unburned fuel (hydrocarbons). The byproducts of incomplete combustion are poisonous, corrosive and combustible, and can cause serious appliance or equipment malfunctions that pose fire or explosion hazards.

The combustion air provisions in this code from previous editions have been deleted from Chapter 17 in favor of a single section that directs the user to NFPA 31 for oil-fired appliance combustion air requirements and the manufacturer's installation instructions for solid fuel-burning appliances. If fuel gas appliances are used, the provisions of Chapter 24 must be followed.

Chapter 18 Chimneys and Vents. Chapter 18 regulates the design, construction, installation, maintenance, repair and approval of chimneys, vents and their connections to fuel-burning appliances. A properly designed chimney or vent system is needed to conduct the flue gases produced by a fuel-burning appliance to the outdoors. The provisions of this chapter are intended to minimize the hazards associated with high temperatures and potentially toxic and corrosive combustion gases. This chapter addresses factory-built and masonry chimneys, vents and venting systems used to vent oil-fired and solid fuel-burning appliances.

Chapter 19 Special Appliances, Equipment and Systems. Chapter 19 regulates the installation of fuel-burning appliances that are not covered in other chapters, such as ranges and ovens, sauna heaters, fuel cell power plants and hydrogen systems. Because the subjects in this chapter do not contain the volume of text necessary to warrant individual chapters, they have been combined into a single chapter. The only commonality is that the subjects use energy to perform some task or function. The intent is to provide a reasonable level of protection for the occupants of the dwelling.

Chapter 20 Boilers and Water Heaters. Chapter 20 regulates the installation of boilers and water heaters. Its purpose is to protect the occupants of the dwelling from the potential hazards associated with such appliances. A water heater is any appliance that heats potable water and supplies it to the plumbing hot water distribution system. A boiler either heats water or generates steam for space heating and is generally a closed system.

Chapter 21 Hydronic Piping. Hydronic piping includes piping, fittings and valves used in building space conditioning systems. Applications include hot water, chilled water, steam, steam condensate, brines and water/antifreeze mixtures. Chapter 21 regulates installation, alteration and repair of all hydronic piping systems to ensure the reliability, serviceability, energy efficiency and safety of such systems.

Chapter 22 Special Piping and Storage Systems. Chapter 22 regulates the design and installation of fuel oil storage and piping systems. The regulations include reference to construction standards for above-ground and underground storage tanks, material standards for piping systems (both above-ground and underground) and extensive requirements for the proper assembly of system piping and components. The purpose of this chapter is to prevent fires, leaks and spills involving fuel oil storage and piping systems, whether inside or outside structures and above or underground.

Chapter 23 Solar Thermal Energy Systems. Chapter 23 contains requirements for the construction, alteration and repair of all systems and components of solar thermal energy systems used for space heating or cooling, and domestic hot water heating or processing. The provisions of this chapter are limited to those necessary to achieve installations that are relatively hazard free.

A solar thermal energy system can be designed to handle 100 percent of the energy load of a building, although this is rarely accomplished. Because solar energy is a low-intensity energy source and dependent on the weather, it is usually necessary to supplement a solar thermal energy system with traditional energy sources.

As our world strives to find alternate means of producing power for the future, the requirements of this chapter will become more and more important over time.

Chapter 24 Fuel Gas. Chapter 24 regulates the design and installation of fuel gas distribution piping and systems, appliances, appliance venting systems and combustion air provisions. The definition of "Fuel gas" includes natural, liquefied petroleum and manufactured gases and mixtures of these gases.

The purposes of this chapter are to establish the minimum acceptable level of safety and to protect life and property from the potential dangers associated with the storage, distribution and use of fuel gases and the byproducts of combustion of such fuels. This code also protects the personnel who install, maintain, service and replace the systems and appliances addressed herein.

Chapter 24 is composed entirely of text extracted from the IFGC; therefore, whether using the IFGC or the IRC, the fuel gas provisions will be identical. Note that to avoid the potential for confusion and conflicting definitions, Chapter 24 has its own definition section.

Chapter 25 Plumbing Administration. The requirements of Chapter 25 do not supersede the administrative provisions of Chapter 1. Rather, the administrative guidelines of Chapter 25 pertain to plumbing installations that are best referenced and located within the plumbing chapters. This chapter addresses how to apply the plumbing provisions of this code to specific types or phases of construction. This chapter also outlines the responsibilities of the applicant, installer and inspector with regard to testing plumbing installations.

Chapter 26 General Plumbing Requirements. The content of Chapter 26 is often referred to as "miscellaneous," rather than general plumbing requirements. This is the only chapter of the plumbing chapters of the code whose requirements do not interrelate. If a requirement cannot be located in another plumbing chapter, it should be located in this chapter. Chapter 26 contains safety requirements for the installation of plumbing systems and includes requirements for the identification of pipe, pipe fittings, traps, fixtures, materials and devices used in plumbing systems. If specific provisions do not demand that a requirement be located in another chapter, the requirement is located in this chapter.

Chapter 27 Plumbing Fixtures. Chapter 27 requires fixtures to be of the proper type, approved for the purpose intended and installed properly to promote usability and safe, sanitary conditions. This chapter regulates the quality of fixtures and faucets by requiring those items to comply with nationally recognized standards. Because fixtures must be properly installed so that they are usable by the occupants of the building, this chapter contains the requirements for the installation of fixtures.

Chapter 28 Water Heaters. Chapter 28 regulates the design, approval and installation of water heaters and related safety devices. The intent is to minimize the hazards associated with the installation and operation of water heaters. Although this chapter does not regulate the size of a water heater, it does regulate all other aspects of the water heater installation such as temperature and pressure relief valves, safety drip pans and connections. Where a water heater also supplies water

for space heating, this chapter regulates the maximum water temperature supplied to the water distribution system.

Chapter 29 Water Supply and Distribution. This chapter regulates the supply of potable water from both public and individual sources to every fixture and outlet so that it remains potable and uncontaminated by cross connections. Chapter 29 also regulates the design of the water distribution system, which will allow fixtures to function properly. Because it is critical that the potable water supply system remain free of actual or potential sanitary hazards, this chapter has the requirements for providing backflow protection devices.

Chapter 30 Sanitary Drainage. The purpose of Chapter 30 is to regulate the materials, design and installation of sanitary drainage piping systems as well as the connections made to the system. The intent is to design and install sanitary drainage systems that will function reliably, are neither undersized nor oversized and are constructed from materials, fittings and connections whose quality is regulated by this section. This chapter addresses the proper use of fittings for directing the flow into and within the sanitary drain piping system. Materials and provisions necessary for servicing the drainage system are also included in this chapter.

Chapter 31 Vents. Venting protects the trap seal of each trap. The vents are designed to limit differential pressures at each trap to 1 inch of water column (249 Pa). Because waste flow in the drainage system creates pressure fluctuations that can negatively affect traps, the sanitary drainage system must have a properly designed venting system. Chapter 31 covers the requirements for vents and venting. All of the provisions set forth in this chapter are intended to limit the pressure differentials in the drainage system to a maximum of 1 inch of water column (249 Pa) above or below atmospheric pressure (i.e., positive or negative pressures).

Chapter 32 Traps. Traps prevent sewer gas from escaping from the drainage piping into the building. Water seal traps are the simplest and most reliable means of preventing sewer gas from entering the interior environment. This chapter lists prohibited trap types and specifies the minimum trap size for each type of fixture.

Chapter 33 Storm Drainage. Rainwater infiltration into the ground adjacent to a building can cause the interior of foundation walls to become wet. The installation of a subsoil drainage system prevents the buildup of rainwater on the exterior of the foundation walls. This chapter provides the specifications for subsoil drain piping. Where the discharge of the subsoil drain system is to a sump, this chapter also provides coverage for sump construction, pumps and discharge piping.

Chapter 34 General Requirements. This chapter contains broadly applicable, general and miscellaneous requirements including scope, listing and labeling, equipment locations and clearances for conductor materials and connections and conductor identification.

Chapter 35 Electrical Definitions. Chapter 35 is the repository of the definitions of terms used in the body of Part VIII of the code. To avoid the potential for confusion and conflicting definitions, Part VIII, Electrical, has its own definition chapter.

Codes are technical documents and every word, term and punctuation mark can impact the meaning of the code text and the intended results. The code often uses terms that have a unique meaning in the code, which can differ substantially from the ordinarily understood meaning of the term as used outside of the code.

The terms defined in Chapter 35 are deemed to be of prime importance in establishing the meaning and intent of the electrical code text that uses the terms. The user of the code should be familiar with and consult this chapter because the definitions are essential to the correct interpretation of the code and because the user may not be aware that a term is defined.

Chapter 36 Services. This chapter covers the design, sizing and installation of the building's electrical service equipment and grounding electrode system. It includes an easy-to-use load calculation method and service conductor sizing table. The electrical service is generally the first part of the electrical system to be designed and installed.

Chapter 37 Branch Circuit and Feeder Requirements. Chapter 37 addresses the requirements for designing the power distribution system, which consists of feeders and branch circuits emanating from the service equipment. This chapter dictates the ratings of circuits and the allowable loads, the number and types of branch circuits required, the wire sizing for such branch circuits and feeders and the requirements for protection from overcurrent for conductors. A load calculation method specific to feeders is also included. This chapter is used to design the electrical system on the load side of the service.

Chapter 38 Wiring Methods. Chapter 38 specifies the allowable wiring methods, such as cable, conduit and raceway systems, and provides the installation requirements for the wiring methods. This chapter is primarily applicable to the "rough-in" phase of construction.

Chapter 39 Power and Lighting Distribution. This chapter mostly contains installation requirements for the wiring that serves the lighting outlets, receptacle outlets, appliances and switches located throughout the building. The required distribution and spacing of receptacle outlets and lighting outlets is prescribed in this chapter, as well as the requirements for ground-fault and arc-fault circuit-interrupter protection.

Chapter 40 Devices and Luminaires. This chapter focuses on the devices, including switches and receptacles, and lighting fixtures that are typically installed during the final phase of construction.

Chapter 41 Appliance Installation. Chapter 41 addresses the installation of appliances including HVAC appliances, water heaters, fixed space-heating equipment, dishwashers, garbage disposals, range hoods and suspended paddle fans.

Chapter 42 Swimming Pools. This chapter covers the electrical installation requirements for swimming pools, storable swimming pools, wading pools, decorative pools, fountains, hot tubs, spas and hydromassage bathtubs. The allowable wiring methods are specified along with the required clearances between electrical system components and pools, spas and tubs. This chapter includes the special grounding requirements related to pools, spas and tubs, and also prescribes the equipotential bonding requirements that are unique to pools, spas and tubs.

Chapter 43 Class 2 Remote-control, Signaling and Power-limited Circuits. This chapter covers the power supplies, wiring methods and installation requirements for the Class 2 circuits found in dwellings. Such circuits include thermostat wiring, alarm systems, security systems, automated control systems and doorbell systems.

Chapter 44 Referenced Standards. The code contains numerous references to standards that are used to regulate materials and methods of construction. Chapter 44 contains a comprehensive list of all standards that are referenced in the code. The standards are part of the code to the extent of the reference to the standard. Compliance with the referenced standard is necessary for compliance with this code. By providing specifically adopted standards, the construction and installation requirements necessary for compliance with the code can be readily determined. The basis for code compliance is, therefore, established and available on an equal basis to the code official, contractor, designer and owner.

Chapter 44 is organized in a manner that makes it easy to locate specific standards. It lists all of the referenced standards, alphabetically, by acronym of the promulgating agency of the standard. Each agency's standards are then listed in either alphabetical or numeric order based upon the standard identification. The list also contains the title of the standard; the edition (date) of the standard referenced; any addenda included as part of the ICC adoption; and the section or sections of this code that reference the standard.

Appendix A Sizing and Capacities of Gas Piping. This appendix is informative and not part of the code. It provides design guidance, useful facts and data and multiple examples of how to apply the sizing tables and sizing methodologies of Chapter 24.

Appendix B Sizing of Venting Systems Serving Appliances Equipped with Draft Hoods, Category I Appliances, and Appliances Listed for Use with Type B Vents. This appendix is informative and not part of the code. It contains multiple examples of how to apply the vent and chimney tables and methodologies of Chapter 24.

Appendix C Exit Terminals of Mechanical Draft and Direct-vent Venting Systems. This appendix is informative and not part of the code. It consists of a figure and notes that visually depict code requirements from Chapter 24 for vent terminals with respect to the openings found in building exterior walls.

Appendix D Recommended Procedure for Safety Inspection of an Existing Appliance Installation. This appendix is informative and not part of the code. It provides recommended procedures for testing and inspecting an appliance installation to determine if the installation is operating safely and if the appliance is in a safe condition.

Appendix E Manufactured Housing Used as Dwellings. The criteria for the construction of manufactured homes are governed by the National Manufactured Housing Construction and Safety Act. While this act may seem to cover the bulk of the construction of manufactured housing, it does not cover those areas related to the placement of the housing on the property. The provisions of Appendix E are not applicable to the design and construction of manufactured homes. Appendix E provides a complete set of regulations in conjunction with federal law for the installation of manufactured housing. This appendix also contains provisions for existing manufactured home installations.

Appendix F Radon Gas Methods. Radon comes from the natural (radioactive) decay of the element radium in soil, rock and water and finds its way into the air. Appendix F contains requirements to mitigate the transfer of radon gases from the soil into the dwelling. The provisions of this appendix regulate the design and construction of radon-resistant measures intended to reduce the entry of radon gases into the living space of residential buildings.

Appendix G Piping Standards for Various Applications. Appendix G provides standards for various types of plastic piping products. This appendix is informative and is not part of the code.

Appendix H Patio Covers. Appendix H sets forth the regulations and limitations for patio covers. The provisions address those uses permitted in patio cover structures, the minimum design loads to be assigned for structural purposes, and the effect of the patio cover on egress and emergency escape or rescue from sleeping rooms. This appendix also contains the special provisions for aluminum screen enclosures in hurricane-prone regions.

Appendix I Private Sewage Disposal. Appendix I simply provides the opportunity to utilize the International Private Sewage Disposal Code for the design and installation of private sewage disposal in one- and two-family dwellings.

Appendix J Existing Buildings and Structures. Appendix J contains the provisions for the repair, renovation, alteration and reconstruction of existing buildings and structures that are within the scope of this code. To accomplish this objective and to make the rehabilitation process more available, this appendix allows for a controlled departure from full code compliance without compromising minimum life safety, fire safety, structural and environmental features of the rehabilitated existing building or structure.

Appendix K Sound Transmission. Appendix K regulates the sound transmission of wall and floor-ceiling assemblies separating dwelling units and townhouse units. Airborne sound insulation is required for walls. Airborne sound insulation and impact sound insulation are required for floor-ceiling assemblies. The provisions in Appendix K set forth a minimum Sound Transmission Class (STC) rating for common walls and floor-ceiling assemblies between dwelling units. In addition, a

minimum Impact Insulation Class (IIC) rating is also established to limit structureborne sound through common floor-ceiling assemblies separating dwelling units.

Appendix L Permit Fees. Appendix L provides guidance to jurisdictions for setting appropriate permit fees. This appendix will aid many jurisdictions to assess permit fees that will assist to fairly and properly administer the code. This appendix can be used for informational purposes only or may be adopted when specifically referenced in the adopting ordinance.

Appendix M Home Day Care—R-3 Occupancy. Appendix M provides means of egress and smoke detection requirements for a Group R-3 Occupancy that is to be used as a home day care for more than five children who receive custodial care for less than 24 hours. This appendix is strictly for guidance and/or adoption by those jurisdictions that have Licensed Home Care Provider laws and statutes that allow more than five children to be cared for in a person's home. When a jurisdiction adopts this appendix, the provisions for day care and child care facilities in the IBC should be considered also.

Appendix N Venting Methods. Because venting of sanitary drainage systems is a difficult concept to understand, and Chapter 31 uses only words to describe venting requirements, illustrations can offer greater insight into what the words mean. Appendix N has a number of illustrations for commonly installed sanitary drainage systems in order for the reader to gain a better understanding of this code's venting requirements.

Appendix O Automatic Vehicular Gates. Appendix O provides the requirements for the design and construction of automatic vehicular gates. The provisions are for where automatic gates are installed for use at a vehicular entrance or exit on the lot of a one- or two-family dwelling. The requirements provide protection for individuals from potential entrapment between an automatic gate and a stationary object or surface.

Appendix P Sizing of Water Piping System. Appendix P provides two recognized methods for sizing the water service and water distribution piping for a building. The method under Section AP103 provides friction loss diagrams that require the user to "plot" points and read values from the diagrams in order to perform the required calculations and necessary checks. This method is the most accurate of the two presented in this appendix. The method under Section AP201 is known to be conservative; however, very few calculations are necessary in order to determine a pipe size that satisfies the flow requirements of any application.

Appendix Q Tiny Houses. For dwelling units that are 400 square feet (37 m^2) or less in floor area, excluding lofts, Appendix Q provides relaxed provisions as compared to those in the body of the code. These provisions primarily address reduced ceiling heights for loft areas and specific stair and ladder detail requirements that allow for more compact designs where accessing lofts.

Appendix R Light Straw-Clay Construction. This appendix regulates the use of light straw-clay as a construction material. It is limited in application to nonbearing wall infill systems.

Appendix S Strawbale Construction. This appendix provides prescriptive requirements for the use of strawbale as a construction material. It is limited in application to the walls of one-story structures, except where additional engineering is provided.

Appendix T Solar-ready Provisions—Detached One- and Two-family Dwellings and Townhouses. This appendix provides requirements for preparation of a house for future installation of solar equipment for electrical power or heating. Given the growing popularity of solar power and the possible need for the equipment in the future, this appendix, if adopted, would require an area be provided on the building roof that would accommodate solar equipment. In addition, pathways for routing of plumbing and conduit need to be provided.

TABLE OF CONTENTS

Part I—Administrative 3

CHAPTER 1 SCOPE AND APPLICATION 3

DIVISION I—CALIFORNIA ADMINISTRATION 3

Section

1.1 General 3
1.2 Reserved 5
1.3 Reserved 5
1.4 Reserved 5
1.5 Reserved 5
1.6 Reserved 5
1.7 Reserved 5
1.8 Department of Housing and Community Development (HCD) 5
1.8.2 Authority and Abbreviations 5
1.8.3 Local Enforcing Agency 7
1.8.4 Permits, Fees, Applications and Inspections 7
1.8.5 Right of Entry for Enforcement 8
1.8.6 Local Modification by Ordinance or Regulation . . . 8
1.8.7 Alternate Materials, Designs, Tests and Methods of Construction 9
1.8.8 Appeals Board 9
1.8.9 Unsafe Buildings or Structures 10
1.8.10 Other Building Regulations 11
1.9 Reserved 11
1.10 Reserved 11
1.11 Office of the State Fire Marshal 11
1.12 Reserved 15
1.13 Reserved 15
1.14 Reserved 15

DIVISION II—ADMINISTRATION 17

Section

R101 General 17
R102 Applicability 17
R103 Department of Building Safety 18
R104 Duties and Powers of the Building Official 18
R105 Permits 19
R106 Construction Documents 21
R107 Temporary Structures and Uses 22
R108 Fees 23
R109 Inspections 23
R110 Certificate of Occupancy 24
R111 Service Utilities 25
R112 Board of Appeals 25
R113 Violations 25
R114 Stop Work Order 25

Part II—Definitions 31

CHAPTER 2 DEFINITIONS 31

Section

R201 General 31
R202 Definitions 31

Part III—Building Planning and Construction 47

CHAPTER 3 BUILDING PLANNING 47

Section

R300 Site Drainage 47
R301 Design Criteria 47
R302 Fire-resistant Construction 76
R303 Light, Ventilation and Heating 82
R304 Minimum Room Areas 83
R305 Ceiling Height 84
R306 Sanitation 84
R307 Toilet, Bath and Shower Spaces 84
R308 Glazing 84
R309 Garages and Carports 87
R310 Emergency Escape and Rescue Openings 88
R311 Means of Egress 90
R312 Guards and Window Fall Protection 93
R313 Automatic Fire Sprinkler Systems 94
R314 Smoke Alarms 107
R315 Carbon Monoxide Alarms 111
R316 Foam Plastic 112
R317 Protection of Wood and Wood-based Products against Decay 115
R318 Protection against Subterranean Termites 116
R319 Site Address 117
R320 Accessibility 117

R321 Elevators and Platform Lifts 117
R322 Flood-resistant Construction 117
R323 Storm Shelters 121
R324 Solar Energy Systems 121
R325 Mezzanines 122
R326 *Reserved* 123
R327 Stationary Storage Battery Systems 123
R334 Construction Waste Reduction, Disposal and Recycling 123
R335 Special Provisions for Licensed 24-hour Care Facilities in a Group R-3.1 123
R336 Large Family Day-care Homes 127
R337 Materials and Construction Methods for Exterior Wildfire Exposure 128
R337.1 Scope, Purpose and Application 128
R337.2 Definitions 129
R337.3 Standards of Quality 130
R337.4 Ignition-resistant Construction 131
R337.5 Roofing 131
R337.6 Vents 132
R337.7 Exterior Covering 132
R337.8 Exterior Windows, Skylights and Doors 135
R337.9 Decking 136
R337.10 Accessory Structures 136
R338 Electric Vehicle 137
R340 Pollutant Control 137

CHAPTER 4 FOUNDATIONS 141

Section
R401 General 141
R402 Materials 142
R403 Footings 143
R404 Foundation and Retaining Walls 163
R405 Foundation Drainage 182
R406 Foundation Waterproofing and Dampproofing 184
R407 Columns 184
R408 Under-floor Space 185

CHAPTER 5 FLOORS 189

Section
R501 General 189
R502 Wood Floor Framing 189
R503 Floor Sheathing 198
R504 Pressure Preservative-treated Wood Floors (On Ground) 199
R505 Cold-formed Steel Floor Framing 200
R506 Concrete Floors (On Ground) 211
R507 Exterior Decks 216

CHAPTER 6 WALL CONSTRUCTION 229

Section
R601 General 229
R602 Wood Wall Framing 229
R603 Cold-formed Steel Wall Framing 277
R604 Wood Structural Panels 318
R605 Particleboard 318
R606 General Masonry Construction 318
R607 Glass Unit Masonry 330
R608 Exterior Concrete Wall Construction 332
R609 Exterior Windows and Doors 403
R610 Structural Insulated Panel Wall Construction 406

CHAPTER 7 WALL COVERING 417

Section
R701 General 417
R702 Interior Covering 417
R703 Exterior Covering 422

CHAPTER 8 ROOF-CEILING CONSTRUCTION 443

Section
R801 General 443
R802 Wood Roof Framing 443
R803 Roof Sheathing 469
R804 Cold-formed Steel Roof Framing 472
R805 Ceiling Finishes 487
R806 Roof Ventilation 487
R807 Attic Access 489

CHAPTER 9 ROOF ASSEMBLIES 493

Section
R901 General 493
R902 Fire Classification 493
R903 Weather Protection 494
R904 Materials 494
R905 Requirements for Roof Coverings 494

R906 Roof Insulation 506
R907 Rooftop-mounted Photovoltaic Panel Systems 506
R908 Reroofing 506
R918 Solar Photovoltaic Panels/Modules 507

CHAPTER 10 CHIMNEYS AND FIREPLACES . . . 511
Section
R1001 Masonry Fireplaces 511
R1002 Masonry Heaters 515
R1003 Masonry Chimneys 515
R1004 Factory-built Fireplaces 519
R1005 Factory-built Chimneys 520
R1006 Exterior Air Supply 521

Part IV—Energy Conservation* *523

Part V—Mechanical* *525

Part VI—Fuel Gas* *527

Part VII—Plumbing* *529

Part VIII—Electrical* *531

Part IX—Referenced Standards* *535

CHAPTER 44 REFERENCED STANDARDS 535

APPENDIX A *Reserved* **555**

APPENDIX B *Reserved* **557**

APPENDIX C *Reserved* **559**

APPENDIX D *Reserved* **561**

APPENDIX E *Reserved* **563**

APPENDIX F RADON CONTROL METHODS . . . 565
Section
AF101 Scope 565
AF102 Definitions 565
AF103 Requirements 566

APPENDIX G *Reserved* 573

APPENDIX H PATIO COVERS 575
Section
AH101 General 575
AH102 Definition 575
AH103 Exterior Walls and Openings 575
AH104 Height 575
AH105 Structural Provisions 576
AH106 Special Provisions for Aluminum Screen Enclosures in Hurricane-prone Regions 576

APPENDIX I PRIVATE SEWAGE DISPOSAL . . . 579
Section
AI101 General 579

APPENDIX J EXISTING BUILDINGS AND STRUCTURES 581
Section
AJ101 Purpose and Intent 581
AJ102 Compliance 581
AJ103 Preliminary Meeting 582
AJ104 Evaluation of an Existing Building 582
AJ105 Permit 583
AJ201 Definitions 583
AJ301 Repairs 583
AJ401 Renovations 584
AJ501 Alterations 584
AJ601 Reconstruction 585
AJ701 Referenced Standards 585

APPENDIX K SOUND TRANSMISSION 587
Section
AK101 General 587
AK102 Airborne Sound 587
AK103 Structural-borne Sound 587
AK104 Referenced Standards 587

APPENDIX L PERMIT FEES 589

APPENDIX M *Reserved* **591**

APPENDIX N *Reserved* **593**

APPENDIX O AUTOMATIC VEHICULAR GATES 595
Section
AO101 General 595

AO102 Definition 595
AO103 Automatic Vehicular Gates 595
AO104 Referenced Standards 595

APPENDIX P *Reserved* 597

APPENDIX Q TINY HOUSES 599

Section
AQ101 General 599
AQ102 Definitions 599
AQ103 Ceiling Height 599
AQ104 Lofts 599
AQ105 Emergency Escape and Rescue Openings 600

APPENDIX R LIGHT STRAW-CLAY CONSTRUCTION 601

Section
AR101 General 601
AR102 Definitions 601
AR103 Nonbearing Light Straw-Clay Construction 601
AR104 Thermal Performance 604

APPENDIX S STRAWBALE CONSTRUCTION 605

Section
AS101 General 605
AS102 Definitions 605
AS103 Bales 607
AS104 Finishes 608
AS105 Strawbale Walls—General 612
AS106 Strawbale Walls—Structural 614
AS107 Fire Resistance 619
AS108 Thermal Insulation 619
AS109 Referenced Standards 619

APPENDIX T SOLAR-READY PROVISIONS—DETACHED ONE- AND TWO-FAMILY DWELLINGS AND TOWNHOUSES 621

Section
T101 Scope 621
T102 General Definition 621
T103 Solar-ready Zone 621

APPENDIX U *Reserved* 623

APPENDIX V SWIMMING POOL SAFETY ACT 625

APPENDIX W AREAS PROTECTED BY THE FACILITIES OF THE CENTRAL VALLEY FLOOD PROTECTION PLAN 629

APPENDIX X EMERGENCY HOUSING 635

Section
AX101 General 635
AX102 Definitions 635
AX103 Emergency Housing 636
AX104 Emergency Sleeping Cabins 636
AX105 Emergency Transportable Housing Units 637
AX106 Tents and Membrane Structures 637
AX107 Accessibility 637
AX108 Lofts in Emergency Housing 637
AX109 Location, Maintenance and Identification 638
AX110 Emergency Housing Facilities 638

INDEX 641

HISTORY NOTE 651

CALIFORNIA RESIDENTIAL CODE – MATRIX ADOPTION TABLE
CHAPTER 1 – SCOPE AND APPLICATION

(Matrix Adoption Tables are nonregulatory, intended only as an aid to the code user.
See Chapter 1 for state agency authority and building applications.)

Adopting agency	BSC	BSC-CG	SFM	HCD			DSA			OSHPD						BSCC	DPH	AGR	DWR	CEC	CA	SL	SLC
				1	2	1/AC	AC	SS	SS/CC	1	1R	2	3	4	5								
Adopt entire chapter																							
Adopt entire chapter as amended (amended sections listed below)																							
Adopt only those sections that are listed below			X	X																			
Chapter / Section																							
Division I California Administration																							
1.1 through 1.1.12			X	X																			
1.8 through 1.8.10.2				X																			
1.11 through 1.11.10			X																				
Division II Administration																							
R104.2 - R104.4			X																				
R104.9 - R104.9.1			X																				
R105.1			X																				
R105.2 Building: Items 1 - 10				X																			
R105.2.1 - R105.2.2			X																				
R105.3 - R105.3.1			X																				
R105.4			X																				
R105.6			X																				
R105.7			X																				
R106 - R106.5			X																				
R106.1				X																			
R106.1.1				X																			
R106.1.3				X																			
R106.1.4				X																			
R106.1.5				X																			
R106.2				X																			
R107 - R107.4			X																				
R109.1			X	X																			
R109.1.1				X																			
R109.1.1.1				X																			
R109.1.3				X																			
R109.1.4			X	X																			
R109.1.4.1				X																			
R109.1.4.2				X																			
R109.1.5			X	X																			
R109.1.5.1			X	X																			
R109.1.5.2				X																			
R109.1.5.3				X																			
R109.1.6			X	X																			
R109.1.6.1				X																			
R109.1.6.2				X																			
R109.2 - R109.4			X																				
R110 - R110.5			X																				
R111 - R111.3			X																				
R113 - R113.2			X																				
R114 - R114.3			X																				

The state agency does not adopt sections identified with the following symbol: †

Part I—Administrative

CHAPTER 1
SCOPE AND APPLICATION

DIVISION I
CALIFORNIA ADMINISTRATION

SECTION 1.1
GENERAL

1.1.1 Title. *These regulations shall be known as the California Residential Code, may be cited as such and will be referred to herein as "this code." The California Residential Code is Part 2.5 of thirteen parts of the official compilation and publication of the adoption, amendment and repeal of building regulations to the California Code of Regulations, Title 24, also referred to as the California Building Standards Code. This part incorporates by adoption the 2018 International Residential Code of the International Code Council with necessary California amendments.*

1.1.2 Purpose. *The purpose of this code is to establish the minimum requirements to safeguard the public health, safety and general welfare through structural strength, means of egress facilities, stability, access to persons with disabilities, sanitation, adequate lighting and ventilation, and energy conservation; safety to life and property from fire and other hazards attributed to the built environment; and to provide safety to fire fighters and emergency responders during emergency operations.*

1.1.3 Scope. *The provisions of this code shall apply to the construction, alteration, movement, enlargement, replacement, repair, equipment, use and occupancy, location, maintenance, removal and demolition of every detached one- and two-family dwelling and townhouse not more than three stories above grade plane in height with a separate means of egress and structures accessory thereto throughout the State of California.*

Exceptions:

1. *Live/work units complying with the requirements of Section 419 of the California Building Code shall be permitted to be constructed as one- and two-family dwellings or townhouses in accordance with this code, as applicable. Fire suppression required by Section 419.5 of the California Building Code when constructed under the California Residential Code for one- and two-family dwellings shall conform to Section 903.3.1.3 of the California Building Code.*
2. *Owner-occupied lodging houses with five or fewer guestrooms shall be permitted to be constructed in accordance with the California Residential Code for one- and two-family dwellings when equipped with a fire sprinkler system in accordance with Section R313.*

1.1.3.1 Classification. *Structures or portions of structures shall be classified with respect to occupancy in one or more of the groups listed in Chapter 3 of the California Building Code. A room or space that is intended to be occupied at different times for different purposes shall comply with all of the requirements that are applicable to each of the purposes for which the room or space will be occupied. Structures with multiple occupancies or uses shall comply with Section 508 of the California Building Code. Where a structure is proposed for a purpose that is not specifically provided for in this code, such structure shall be classified in the group that the occupancy most nearly resembles, according to the fire safety and relative hazard involved in accordance with this code or the California Building Code.*

Note: *Live/work units complying with the requirements of Section 419 of the California Building Code are classified as a Group R-2 occupancy and are permitted to be constructed as one- and two-family dwellings or townhouses in accordance with this code.*

1.1.3.1.1 Utility and Miscellaneous Group U. *Buildings and structures of an accessory character and miscellaneous structures not classified in any specific occupancy shall be constructed, equipped and maintained to conform to the requirements of this code commensurate with the fire and life hazard incidental to their occupancy. Group U shall include, but not be limited to, the following:*

Agricultural buildings
Aircraft hangars, accessory to a one- or two-family residence (see Section 412.5 of the California Building Code)
Barns
Carports
Fences more than 7 feet (2134 mm) high
Grain silos, accessory to a residential occupancy
Greenhouses
Livestock shelters
Private garages
Retaining walls
Sheds
Stables
Tanks
Towers

1.1.3.2 Regulated buildings, structures and applications. *The model code, state amendments to the model code, and/or state amendments where there are no relevant model code provisions shall apply to detached one- and two-family dwellings, lodging houses, live/work units, townhouses, and structures accessory thereto. State agencies with regulatory authority as specified in Sections 1.2 through 1.14, except where modified by local ordinance pursuant to Section 1.1.8. When adopted by a state agency, the provisions of this code shall be enforced by the appropriate enforcing agency, but only to the extent of authority granted to such agency by the state legislature.*

Note: *See Preface to distinguish the model code provisions from the California provisions.*

1. *One- and two-family dwellings, townhouses, employee housing, factory-built housing and other types of dwellings containing sleeping accommodations with common toilets or cooking facilities. See Section 1.8.2.1.1.*
2. *Permanent buildings and permanent accessory buildings or structures constructed within mobilehome parks and special occupancy parks regulated by the Department of Housing and Community Development. See Section 1.8.2.1.3.*
3. *Applications regulated by the Office of the State Fire Marshal include, but are not limited to, the following in accordance with Section 1.11:*

   3.1. Buildings or structures used or intended for use as a/an:

   1. *Home for the elderly, children's nursery, children's home or institution, school or any similar occupancy of any capacity*
   2. *Small family day-care homes, large family day-care homes, residential facilities and residential facilities for the elderly, residential care facilities*
   3. *State institutions or other state-owned or state-occupied buildings*
   4. *Residential structures*
   5. *Tents, awnings or other fabric enclosures used in connection with any occupancy*
   6. *Fire alarm devices, equipment and systems in connection with any occupancy*
   7. *Wildland-urban interface fire areas*

1.1.4 Appendices. *Provisions contained in the appendices of this code shall not apply unless specifically adopted by a state agency or adopted by a local enforcing agency in compliance with Health and Safety Code Section 18901 et seq. for Building Standards Law, Health and Safety Code Section 17950 for State Housing Law and Health and Safety Code Section 13869.7 for Fire Protection Districts. See Section 1.1.8 of this code.*

1.1.5 Referenced codes. *The codes, standards and publications adopted and set forth in this code, including other codes, standards and publications referred to therein are, by title and date of publication, hereby adopted as standard reference documents of this code. When this code does not specifically cover any subject related to building design and construction, recognized architectural or engineering practices shall be employed. The National Fire Codes, standards and the Fire Protection Handbook of the National Fire Protection Association are permitted to be used as authoritative guides in determining recognized fire prevention engineering practices.*

1.1.6 Nonbuilding standards, orders and regulations. *Requirements contained in the International Residential Code, or in any other referenced standard, code or document, which are not building standards as defined in Health and Safety Code Section 18909, shall not be construed as part of the provisions of this code. For nonbuilding standards, orders and regulations, see other titles of the California Code of Regulations.*

1.1.7 Order of precedence and use.

1.1.7.1 Differences. *In the event of any differences between these building standards and the standard reference documents, the text of these building standards shall govern.*

1.1.7.2 Specific provisions. *Where a specific provision varies from a general provision, the specific provision shall apply.*

1.1.7.3 Conflicts. *When the requirements of this code conflict with the requirements of any other part of the California Building Standards Code, Title 24, the most restrictive requirements shall prevail.*

1.1.7.3.1 Detached one- and two-family dwellings. *Detached one- and two-family dwellings, lodging houses, live/work units, townhouses not more than three stories above grade plane in height with a separate means of egress, and their accessory structures may be designed and constructed in accordance with this code or the California Building Code, but not both, unless the proposed structure(s) or element(s) exceed the design limitations established in this code, and the code user is specifically directed by this code to use the California Building Code.*

1.1.8 City, county, or city and county amendments, additions or deletions. *The provisions of this code do not limit the authority of a city, county, or city and county governments to establish more restrictive and reasonably necessary differences to the provisions contained in this code pursuant to complying with Section 1.1.8.1. The effective date of amendments, additions or deletions to this code by a city, county, or city and county filed pursuant to Section 1.1.8.1 shall be the date filed. However, in no case shall the amendments, additions or deletions to this code be effective any sooner than the effective date of this code.*

Local modifications shall comply with Health and Safety Code Section 18941.5 for Building Standards Law, Health and Safety Code Section 17958 for State Housing Law or Health and Safety Code Section 13869.7 for Fire Protection Districts.

1.1.8.1 Findings and filings.

1. *The city, county, or city and county shall make express findings for each amendment, addition or deletion based upon climatic, topographical or geological conditions.*

   Exception: *Hazardous building ordinances and programs mitigating unreinforced masonry buildings.*

2. *The city, county, or city and county shall file the amendments, additions or deletions expressly marked and identified as to the applicable findings. Cities, counties, cities and counties, and fire departments shall file the amendments, additions or deletions, and the findings with the California Building Standards Commission at 2525 Natomas Park Drive, Suite 130, Sacramento, CA 95833.*

3. *Findings prepared by fire protection districts shall be ratified by the local city, county, or city and county and filed with the California Department of Housing and Community Development, Division of Codes and Standards, P.O. Box 1407, Sacramento, CA 95812-1407. 9342 Tech Center Drive #500 Sacramento, CA 95826-2581.*

1.1.9 Effective date of this code. *Only those standards approved by the California Building Standards Commission that are effective at the time an application for building permit is submitted shall apply to the plans and specifications for, and to the construction performed under, that permit. For the effective dates of the provisions contained in this code, see the History Note page of this code.*

(HCD 1 & HCD 2) Exception: *Plans approved by the Department of Housing and Community Development or a Department-approved design approval agency for factory built housing as defined by Health and Safety Code Section 19971. Approved plans, pursuant to the California Code of Regulations, Title 25, Division 1, Chapter 3, Subchapter 1, Article 3, Section 3048 remain valid for a period of 36 months from the date of plan approval.*

1.1.10 Availability of codes. *At least one complete copy each of Titles 8, 19, 20, 24 and 25 with all revisions shall be maintained in the office of the building official responsible for the administration and enforcement of this code. Each state department concerned and each city, county, or city and county shall have an up-to-date copy of the code available for public inspection. See Health and Safety Code Section 18942(e) (1) and (2).*

1.1.11 Format. *This part fundamentally adopts the International Residential Code by reference on a chapter-by-chapter basis. When a specific chapter of the International Residential Code is not printed in the code and is marked "Reserved," such chapter of the International Residential Code is not adopted as a portion of this code. When a specific chapter of the International Residential Code is marked "Not adopted by the State of California" but appears in the code, it may be available for adoption by local ordinance.*

Note: *Matrix Adoption Tables at the front of each chapter may aid the code user in determining which chapter or sections within a chapter are applicable to buildings under the authority of a specific state agency, but they are not to be considered regulatory.*

1.1.12 Validity. *If any chapter, section, subsection, sentence, clause or phrase of this code is for any reason held to be unconstitutional, contrary to statute, exceeding the authority of the state as stipulated by statutes or otherwise inoperative, such decision shall not affect the validity of the remaining portion of this code.*

SECTION 1.2
Reserved

SECTION 1.3
Reserved

SECTION 1.4
Reserved

SECTION 1.5
Reserved

SECTION 1.6
Reserved

SECTION 1.7
Reserved

SECTION 1.8
DEPARTMENT OF HOUSING AND COMMUNITY DEVELOPMENT (HCD)

1.8.1 Purpose. *The purpose of this code is to establish the minimum requirements necessary to protect the health, safety and general welfare of the occupants and the public by governing accessibility, erection, construction, reconstruction, enlargement, conversion, alteration, repair, moving, removal, demolition, occupancy, use, height, court, area, sanitation, ventilation, maintenance and safety to life and property from fire and other hazards attributed to the built environment.*

SECTION 1.8.2
AUTHORITY AND ABBREVIATIONS

1.8.2.1 General. *The Department of Housing and Community Development is authorized by law to promulgate and adopt building standards and regulations for several types of building applications. The applications under the authority of the Department of Housing and Community Development are listed in Sections 1.8.2.1.1 through 1.8.2.1.3.*

1.8.2.1.1 Housing construction.

Application—*Hotels, motels, lodging houses, apartments, dwellings, dormitories, condominiums, shelters for homeless persons, congregate residences, employee housing, factory-built housing and other types of dwellings containing sleeping accommodations with or without common toilet or cooking facilities including accessory buildings, facilities and uses thereto. Sections of this code which pertain to applications listed in this section are identified using the abbreviation "HCD 1."*

Enforcing agency—*Local building department or the Department of Housing and Community Development.*

Authority cited—*Health and Safety Code Sections 17040, 17050, 17920.9, 17921, 17921.5, 17921.6, 17921.10, 17922, 17922.6, 17922.12, 17922.14, 17926, 17927, 17928, 18300, 18552, 18554, 18620, 18630, 18640, 18670, 18690, 18691, 18865, 18871.3, 18871.4, 18873, 18873.1 through 18873.5, 18938.3, 18944.11 and 19990; and Government Code Section 12955.1.*

Reference—*Health and Safety Code Sections 17000 through 17062.5, 17910 through 17995.5, 18200 through 18700, 18860 through 18874, 19960 through 19997; Civil Code Sections 1101.4, 1101.5 and 1954.201; and Government Code Sections 12955.1 and 12955.1.1.*

1.8.2.1.2 Housing accessibility.

Application—*Covered multifamily dwellings as defined in Chapter 2 of the California Building Code including, but not limited to, lodging houses, dormitories, timeshares, condominiums, shelters for homeless persons, congregate residences, apartments, dwellings, employee housing, factory-built housing and other types of dwellings containing sleeping accommodations with or without common toilet or cooking facilities.*

Sections of this code identified by the abbreviation "HCD 1-AC" require specific accommodations for persons with disabilities as defined in Chapter 2 of the California Building Code. The application of such provisions shall be in conjunction with other requirements of the Building Standards Code and apply only to newly constructed covered multifamily dwellings as defined in Chapter 2 of the California Building Code. "HCD 1-AC" applications include, but are not limited to, the following:

1. *All newly constructed covered multifamily dwellings as defined in Chapter 2 of the California Building Code.*
2. *New common use areas as defined in Chapter 2 of the California Building Code serving existing covered multifamily dwellings.*
3. *Additions to existing buildings, where the addition alone meets the definition of covered multifamily dwellings as defined in Chapter 2 of the California Building Code.*
4. *New common use areas serving new covered multifamily dwellings.*
5. *Where any portion of a building's exterior is preserved, but the interior of the building is removed, including all structural portions of floors and ceilings, the building is considered a new building for determining the application of California Building Code, Chapter 11A.*

"HCD 1-AC" building standards generally do not apply to public use areas or public accommodations such as hotels and motels, and public housing. Public use areas, public accommodations, and public housing, as defined in Chapter 2 of the California Building Code, are subject to the Division of the State Architect (DSA-AC) in Chapter 11B and are referenced in California Building Code Section 1.9.1.

Enforcing agency—*Local building department or the Department of Housing and Community Development.*

Authority cited—*Health and Safety Code Sections 17040, 17050, 17920.9, 17921, 17921.5, 17921.6, 17921.10, 17922, 17922.6, 17922.12, 17922.14, 17926, 17927, 17928, 18300, 18552, 18554, 18620, 18630, 18640, 18670, 18690, 18691, 18865, 18871.3, 18871.4, 18873, 18873.1 through 18873.5, 18938.3, 18944.11 and 19990; and Government Code Section 12955.1.*

Reference—*Health and Safety Code Sections 17000 through 17062.5, 17910 through 17995.5, 18200 through 18700, 18860 through 18874, 19960 through 19997; Civil Code Sections 1101.4, 1101.5 and 1954.201; and Government Code Sections 12955.1 and 12955.1.1.*

1.8.2.1.3 Permanent buildings in mobilehome parks and special occupancy parks.

Application—*Permanent buildings, and permanent accessory buildings or structures, constructed within mobilehome parks and special occupancy parks that are under the control and ownership of the park operator. Sections of this code which pertain to applications listed in this section are identified using the abbreviation "HCD 2."*

Enforcing agency—*The Department of Housing and Community Development, local building department or other local agency that has assumed responsibility for the enforcement of Health and Safety Code, Division 13, Part 2.1, commencing with Section 18200 for mobilehome parks and Health and Safety Code, Division 13, Part 2.3, commencing with Section 18860 for special occupancy parks.*

Authority cited—*Health and Safety Code Sections 17040, 17050, 17920.9, 17921, 17921.5, 17921.6, 17921.10, 17922, 17922.6, 17922.12, 17922.14, 17926, 17927, 17928, 18300, 18552, 18554, 18620, 18630, 18640, 18670, 18690, 18691, 18865, 18871.3, 18871.4, 18873, 18873.1 through 18873.5, 18938.3, 18944.11 and 19990; and Government Code Section 12955.1.*

Reference—*Health and Safety Code Sections 17000 through 17062.5, 17910 through 17995.5, 18200 through 18700, 18860 through 18874, 19960 through 19997; Civil Code Sections 1101.4, 1101.5 and 1954.201; and Government Code Sections 12955.1 and 12955.1.1.*

SECTION 1.8.3
LOCAL ENFORCING AGENCY

1.8.3.1 Duties and powers. *The building department of every city, county, or city and county shall enforce all the provisions of law, this code, and the other rules and regulations promulgated by the Department of Housing and Community Development pertaining to the installation, erection, construction, reconstruction, movement, enlargement, conversion, alteration, repair, removal, demolition or arrangement of apartments, condominiums, hotels, motels, lodging houses and dwellings, including accessory buildings, facilities and uses thereto.*

The provisions regulating the erection and construction of dwellings and appurtenant structures shall not apply to existing structures as to which construction is commenced or approved prior to the effective date of these regulations. Requirements relating to use, maintenance and occupancy shall apply to all dwellings and appurtenant structures approved for construction or constructed before or after the effective date of this code.

For additional information regarding the use and occupancy of existing buildings and appurtenant structures, see California Code of Regulations, Title 25, Division 1, Chapter 1, Subchapter 1, commencing with Article 1, Section 1.

For additional requirements regarding additions, alterations or repairs to existing buildings and appurtenant structures, see the California Existing Building Code.

1.8.3.2 Laws, rules and regulations. *Other than the building standards contained in this code, and notwithstanding other provisions of law, the statutory authority and location of the laws, rules and regulations to be enforced by local enforcing agencies are listed by statute in Sections 1.8.3.2.1 through 1.8.3.2.5 below:*

1.8.3.2.1 State Housing Law. *Refer to the State Housing Law, California Health and Safety Code, Division 13, Part 1.5, commencing with Section 17910 and California Code of Regulations, Title 25, Division 1, Chapter 1, Subchapter 1, commencing with Section 1, for the erection, construction, reconstruction, movement, enlargement, conversion, alteration, repair, removal, demolition or arrangement of apartments, condominiums, hotels, motels, lodging houses and dwellings, including accessory buildings, facilities and uses thereto.*

1.8.3.2.2 Mobilehome Parks Act. *Refer to the Mobilehome Parks Act, California Health and Safety Code, Division 13, Part 2.1, commencing with Section 18200 and California Code of Regulations, Title 25, Division 1, Chapter 2, commencing with Section 1000 for mobilehome park administrative and enforcement authority, permits, plans, fees, violations, inspections and penalties both within and outside mobilehome parks.*

Exception: *Mobilehome parks where the Department of Housing and Community Development is the enforcing agency.*

1.8.3.2.3 Special Occupancy Parks Act. *Refer to the Special Occupancy Parks Act, California Health and Safety Code, Division 13, Part 2.3, commencing with Section 18860 and California Code of Regulations, Title 25, Division 1, Chapter 2.2, commencing with Section 2000 for special occupancy park administrative and enforcement authority, permits, fees, violations, inspections and penalties both within and outside of special occupancy parks.*

Exception: *Special occupancy parks where the Department of Housing and Community Development is the enforcing agency.*

1.8.3.2.4 Employee Housing Act. *Refer to the Employee Housing Act, California Health and Safety Code, Division 13, Part 1, commencing with Section 17000 and California Code of Regulations, Title 25, Division 1, Chapter 1, Subchapter 3, commencing with Section 600 for employee housing administrative and enforcement authority, permits, fees, violations, inspections and penalties.*

1.8.3.2.5 Factory-Built Housing Law. *Refer to the Factory-Built Housing Law, California Health and Safety Code, Division 13, Part 6, commencing with Section 19960 and California Code of Regulations, Title 25, Division 1, Chapter 3, Subchapter 1, commencing with Section 3000 for factory-built housing administrative and enforcement authority, permits, fees, violations, inspections and penalties.*

SECTION 1.8.4
PERMITS, FEES, APPLICATIONS AND INSPECTIONS

1.8.4.1 Permits. *A written construction permit shall be obtained from the enforcing agency prior to the erection, construction, reconstruction, installation, moving or alteration of any building or structure.*

Exceptions:

1. *Work exempt from permits as specified in Chapter 1, Scope and Application, Division II, Administration, Section R105.2.*
2. *Changes, alterations or repairs of a minor nature not affecting structural features, egress, sanitation, safety or accessibility as determined by the enforcing agency.*

Exemptions from permit requirements shall not be deemed to grant authorization for any work to be done in any manner in violation of other provisions of law or this code.

1.8.4.2 Fees. *Subject to other provisions of law, the governing body of any city, county, or city and county may prescribe fees to defray the cost of enforcement of rules and regulations promulgated by the Department of Housing and Community Development. The amount of the fees shall not exceed the amount reasonably necessary to administer or process permits, certificates, forms or other documents, or to defray the costs of enforcement. For additional information, see State Housing Law, Health and Safety Code, Division 13, Part 1.5, Section 17951 and California Code of Regulations, Title 25, Division 1, Chapter 1, Subchapter 1, Article 3, commencing with Section 6.*

1.8.4.3 Plan review and time limitations. *Subject to other provisions of law, provisions related to plan checking, prohi-*

bition of excessive delays and contracting with or employment of private parties to perform plan checking are set forth in State Housing Law, Health and Safety Code Section 17960.1, and for employee housing, in Health and Safety Code Section 17021.

1.8.4.3.1 Retention of plans. *The building department of every city, county, or city and county shall maintain an official copy, microfilm, electronic or other type of photographic copy of the plans of every building, during the life of the building, for which the department issued a building permit.*

Exceptions:

1. *Single or multiple dwellings not more than two stories and basement in height.*
2. *Garages and other structures appurtenant to buildings listed in Exception 1.*
3. *Farm or ranch buildings appurtenant to buildings listed in Exception 1.*
4. *Any one-story building where the span between bearing walls does not exceed 25 feet (7620 mm), except a steel frame or concrete building.*

All plans for common interest developments as defined in Section 4100 of the California Civil Code shall be retained. For additional information regarding plan retention and reproduction of plans by an enforcing agency, see Health and Safety Code Sections 19850 through 19852.

1.8.4.4 Inspections. *Construction or work for which a permit is required shall be subject to inspection by the building official and such construction or work shall remain accessible and exposed for inspection purposes until approved. Approval as a result of an inspection shall not be construed to be an approval of a violation of the provisions of this code or other regulations of the Department of Housing and Community Development. Required inspections are listed in Chapter 1, Scope and Application, Division II, Administration, Sections R109.1.1, R109.1.1.1, R109.1.3, R109.1.4, R109.1.4.1, R109.1.4.2, R109.1.5, R109.1.5.1, R109.1.5.2, R109.1.5.3, R109.1.6, R109.1.6.1 and R109.1.6.2.*

SECTION 1.8.5
RIGHT OF ENTRY FOR ENFORCEMENT

1.8.5.1 General. *Subject to other provisions of law, officers and agents of the enforcing agency may enter and inspect public and private properties to secure compliance with the rules and regulations promulgated by the Department of Housing and Community Development. For limitations and additional information regarding enforcement, see the following:*

1. *For applications subject to the State Housing Law as referenced in Section 1.8.3.2.1 of this code, refer to Health and Safety Code, Division 13, Part 1.5, commencing with Section 17910 and California Code of Regulations, Title 25, Division 1, Chapter 1, Subchapter 1, commencing with Section 1.*
2. *For applications subject to the Mobilehome Parks Act as referenced in Section 1.8.3.2.2 of this code, refer to Health and Safety Code, Division 13, Part 2.1, commencing with Section 18200 and California Code of Regulations, Title 25, Division 1, Chapter 2, commencing with Section 1000.*
3. *For applications subject to the Special Occupancy Parks Act as referenced in Section 1.8.3.2.3 of this Code, refer to Health and Safety Code, Division 13, Part 2.3, commencing with Section 18860 and California Code of Regulations, Title 25, Division 1, Chapter 2.2, commencing with Section 2000.*
4. *For applications subject to the Employee Housing Act as referenced in Section 1.8.3.2.4 of this code, refer to Health and Safety Code, Division 13, Part 1, Section 17000 and California Code of Regulations, Title 25, Division 1, Chapter 1, Subchapter 3, commencing with Section 600.*
5. *For applications subject to the Factory-Built Housing Law as referenced in Section 1.8.3.2.5 of this code, refer to Health and Safety Code, Division 13, Part 6, commencing with Sections 19960 and California Code of Regulations, Title 25, Division 1, Chapter 3, Subchapter 1, commencing with Section 3000.*

SECTION 1.8.6
LOCAL MODIFICATION BY ORDINANCE OR REGULATION

1.8.6.1 General. *Subject to other provisions of law, a city, county, or city and county may make changes to the provisions adopted by the Department of Housing and Community Development. If any city, county, or city and county does not amend, add or repeal by local ordinances or regulations the provisions published in this code or other regulations promulgated by the Department of Housing and Community Development, those provisions shall be applicable and shall become effective 180 days after publication by the California Building Standards Commission. Amendments, additions and deletions to this code adopted by a city, county, or city and county pursuant to California Health and Safety Code Sections 17958.5, 17958.7 and 18941.5, together with all applicable portions of this code, shall also become effective 180 days after publication of the California Building Standards Code by the California Building Standards Commission.*

1.8.6.2 Findings, filings and rejections of local modifications. *Prior to making any modifications or establishing more restrictive building standards, the governing body shall make express findings and filings, as required by California Health and Safety Code Section 17958.7, showing that such modifications are reasonably necessary due to local climatic, geological or topographical conditions. No modification shall become effective or operative unless the following requirements are met:*

1. *The express findings shall be made available as a public record.*

2. *A copy of the modification and express finding, each document marked to cross-reference the other, shall be filed with the California Building Standards Commission for a city, county, or city and county and with the Department of Housing and Community Development for fire protection districts.*
3. *The California Building Standards Commission has not rejected the modification or change.*

Nothing in this section shall limit the authority of fire protection districts pursuant to California Health and Safety Code Section 13869.7(a).

SECTION 1.8.7
ALTERNATE MATERIALS, DESIGNS, TESTS AND METHODS OF CONSTRUCTION

1.8.7.1 General. *The provisions of this code, as adopted by the Department of Housing and Community Development, are not intended to prevent the use of any alternate material, appliance, installation, device, arrangement, design or method of construction not specifically prescribed by this code. Consideration and approval of alternates shall comply with Section 1.8.7.2 for local building departments and Section 1.8.7.3 for the Department of Housing and Community Development.*

1.8.7.2 Local building departments. *The building department of any city, county, or city and county may approve alternates for use in the erection, construction, reconstruction, movement, enlargement, conversion, alteration, repair, removal, demolition or arrangement of apartments, condominiums, hotels, motels, lodging houses, dwellings, or accessory structures, except for the following:*

1. *Structures located in mobilehome parks as defined in California Health and Safety Code Section 18214.*
2. *Structures located in special occupancy parks as defined in California Health and Safety Code Section 18862.43.*
3. *Factory-built housing as defined in California Health and Safety Code Section 19971.*

1.8.7.2.1 Approval of alternates. *The consideration and approval of alternates by a local building department shall comply with the following procedures and limitations:*

1. *The approval shall be granted on a case-by-case basis.*
2. *Evidence shall be submitted to substantiate claims that the proposed alternate, in performance, safety and protection of life and health, conforms to, or is at least equivalent to, the standards contained in this code and other rules and regulations promulgated by the Department of Housing and Community Development.*
3. *The local building department may require tests performed by an approved testing agency at the expense of the owner or owner's agent as proof of compliance.*
4. *If the proposed alternate is related to accessibility in covered multifamily dwellings or in facilities serving covered multifamily dwellings as defined in CBC Chapter 2, the proposed alternate must also meet the threshold set for equivalent facilitation as defined in Chapter 2 of the California Building Code.*

For additional information regarding approval of alternates by a building department pursuant to the State Housing Law, see California Health and Safety Code Section 17951(e) and California Code of Regulations, Title 25, Division 1, Chapter 1, Subchapter 1.

1.8.7.3 Department of Housing and Community Development. *The Department of Housing and Community Development may approve alternates for use in the erection, construction, reconstruction, movement, enlargement, conversion, alteration, repair, removal or demolition of apartments, condominiums, hotels, motels, lodging houses, dwellings, or an accessory thereto and permanent buildings in mobilehome parks and special occupancy parks. The consideration and approval of alternates shall comply with the following:*

1. *The department may require tests at the expense of the owner or owner's agent to substantiate compliance with the California Building Standards Code.*
2. *The approved alternate shall, for its intended purpose, be at least equivalent in performance and safety to the materials, designs, tests or methods of construction prescribed by this code.*

SECTION 1.8.8
APPEALS BOARD

1.8.8.1 General. *Every city, county, or city and county shall establish a process to hear and decide appeals of orders, decisions and determinations made by the enforcing agency relative to the application and interpretation of this code and other regulations governing construction, use, maintenance and change of occupancy. The governing body of any city, county, or city and county may establish a local appeals board and a housing appeals board to serve this purpose. Members of the appeals board(s) shall not be employees of the enforcing agency and shall be knowledgeable in the applicable building codes, regulations and ordinances as determined by the governing body of the city, county, or city and county.*

Where no such appeals boards or agencies have been established, the governing body of the city, county, or city and county shall serve as the local appeals board or housing appeals board as specified in California Health and Safety Code Sections 17920.5 and 17920.6.

1.8.8.2 Definitions. *The following terms shall for the purposes of this section have the meaning shown.*

HOUSING APPEALS BOARD. *The board or agency of a city, county, or city and county which is authorized by the governing body of the city, county, or city and county to hear appeals regarding the requirements of the city, county or city and county relating to the use, maintenance and change of occupancy of buildings and structures, including requirements governing alteration, additions, repair, demolition and moving. In any area in which there is no such board or agency, "Housing Appeals Board" means the local appeals board having jurisdiction over the area.*

LOCAL APPEALS BOARD. *The board or agency of a city, county, or city and county which is authorized by the governing body of the city, county, or city and county to hear appeals regarding the building requirements of the city, county, or city and county. In any area in which there is no such board or agency, "Local Appeals Board" means the governing body of the city, county, or city and county having jurisdiction over the area.*

1.8.8.3 Appeals. *Except as otherwise provided in law, any person, firm or corporation adversely affected by a decision, order or determination by a city, county, or city and county relating to the application of building standards published in the California Building Standards Code, or any other applicable rule or regulation adopted by the Department of Housing and Community Development, or any lawfully enacted ordinance by a city, county, or city and county, may appeal the issue for resolution to the local appeals board or housing appeals board as appropriate.*

The local appeals board shall hear appeals relating to new building construction, and the housing appeals board shall hear appeals relating to existing buildings.

SECTION 1.8.9
UNSAFE BUILDINGS OR STRUCTURES

1.8.9.1 Authority to enforce. *Subject to other provisions of law, the administration, enforcement, actions, proceedings, abatement, violations and penalties for unsafe buildings and structures are contained in the following statutes and regulations:*

1. *For applications subject to the State Housing Law as referenced in Section 1.8.3.2.1 of this code, refer to Health and Safety Code, Division 13, Part 1.5, commencing with Section 17910 and California Code of Regulations, Title 25, Division 1, Chapter 1, Subchapter 1, commencing with Section 1.*
2. *For applications subject to the Mobilehome Parks Act as referenced in Section 1.8.3.2.2 of this code, refer to Health and Safety Code, Division 13, Part 2.1, commencing with Section 18200 and California Code of Regulations, Title 25, Division 1, Chapter 2, commencing with Section 1000.*
3. *For applications subject to the Special Occupancy Parks Act as referenced in Section 1.8.3.2.3 of this code, refer to Health and Safety Code, Division 13, Part 2.3, commencing with Section 18860 and California Code of Regulations, Title 25, Division 1, Chapter 2.2, commencing with Section 2000.*
4. *For applications subject to the Employee Housing Act as referenced in Section 1.8.3.2.4 of this code, refer to Health and Safety Code, Division 13, Part 1, commencing with Section 17000 and California Code of Regulations, Title 25, Division 1, Chapter 1, Subchapter 3, commencing with Section 600.*
5. *For applications subject to the Factory-Built Housing Law as referenced in Section 1.8.3.2.5 of this code, refer to Health and Safety Code, Division 13, Part 6, commencing with Section 19960 and California Code of Regulations, Title 25, Division 1, Chapter 3, Subchapter 1, commencing with Section 3000.*

1.8.9.2 Actions and proceedings. *Subject to other provisions of law, punishments, penalties and fines for violations of building standards are contained in the following statutes and regulations:*

1. *For applications subject to the State Housing Law as referenced in Section 1.8.3.2.1 of this code, refer to Health and Safety Code, Division 13, Part 1.5, commencing with Section 17910 and California Code of Regulations, Title 25, Division 1, Chapter 1, Subchapter 1, commencing with Section 1.*
2. *For applications subject to the Mobilehome Parks Act as referenced in Section 1.8.3.2.2 of this code, refer to Health and Safety Code, Division 13, Part 2.1, commencing with Section 18200 and California Code of Regulations, Title 25, Division 1, Chapter 2, commencing with Section 1000.*
3. *For applications subject to the Special Occupancy Parks Act as referenced in Section 1.8.3.2.3 of this code, refer to the Health and Safety Code, Division 13, Part 2.3, commencing with Section 18860 and California Code of Regulations, Title 25, Division 1, Chapter 2.2, commencing with Section 2000.*
4. *For applications subject to the Employee Housing Act as referenced in Section 1.8.3.2.4 of this code, refer to Health and Safety Code, Division 13, Part 1, commencing with Section 17000 and California Code of Regulations, Title 25, Division 1, Chapter 1, Subchapter 3, commencing with Section 600.*
5. *For applications subject to the Factory-Built Housing Law as referenced in Section 1.8.3.2.5 of this code, refer to Health and Safety Code, Division 13, Part 6, commencing with Section 19960 and California Code of Regulations, Title 25, Division 1, Chapter 3, Subchapter 1, commencing with Section 3000.*

SECTION 1.8.10
OTHER BUILDING REGULATIONS

1.8.10.1 Existing structures. *Notwithstanding other provisions of law, the replacement, retention, and extension of original materials and the use of original methods of construction for any existing building or accessory structure, or portions thereof, shall be permitted in accordance with the provisions of this code and the California Existing Building Code, as adopted by the Department of Housing and Community Development. For additional information, see California Health and Safety Code, Sections 17912, 17920.3, 17922 and 17958.8.*

1.8.10.2 Moved structures. *Subject to the requirements of California Health and Safety Code Sections 17922, 17922.3 and 17958.9, local ordinances or regulations relating to a moved residential building or accessory structure thereto, shall permit the replacement, retention, and extension of original materials and the use of original methods of construction so long as the structure does not become or continue to be a substandard building.*

SECTION 1.9
Reserved

SECTION 1.10
Reserved

SECTION 1.11
OFFICE OF THE STATE FIRE MARSHAL

1.11.1 SFM—Office of the State Fire Marshal. *Specific scope of application of the agency responsible for enforcement, the enforcement agency and the specific authority to adopt and enforce such provisions of this code, unless otherwise stated.*

Application. *Institutional, educational or any similar occupancy. Any building or structure used or intended for use as an asylum, jail, mental hospital, hospital, sanitarium, home for the aged, children's nursery, children's home, school or any similar occupancy of any capacity.*

Authority cited—*Health and Safety Code Section 13143.*

Reference—*Health and Safety Code Section 13143.*

Assembly or similar place of assemblage. *Any theater, dancehall, skating rink, auditorium, assembly hall, meeting hall, nightclub, fair building or similar place of assemblage where 50 or more persons may gather together in a building, room or structure for the purpose of amusement, entertainment, instruction, deliberation, worship, drinking or dining, awaiting transportation, or education.*

Authority cited—*Health and Safety Code Section 13143.*

Reference—*Health and Safety Code Section 13143.*

Small family day-care homes.

Authority cited—*Health and Safety Code Sections 1597.45, 1597.54, 13143 and 17921.*

Reference—*Health and Safety Code Section 13143.*

Large family day-care homes.

Authority cited—*Health and Safety Code Sections 1597.46, 1597.54 and 17921.*

Reference—*Health and Safety Code Section 13143.*

Residential facilities and residential facilities for the elderly.

Authority cited—*Health and Safety Code Section 13133.*

Reference—*Health and Safety Code Section 13143.*

Any state institution or other state-owned or state-occupied building.

Authority cited—*Health and Safety Code Section 13108.*

Reference—*Health and Safety Code Section 13143.*

High-rise structures.

Authority cited—*Health and Safety Code Section 13211.*

Reference—*Health and Safety Code Section 13143.*

Motion picture production studios.

Authority cited—*Health and Safety Code Section 13143.1.*

Reference—*Health and Safety Code Section 13143.*

Organized camps.

Authority cited—*Health and Safety Code Section 18897.3.*

Reference—*Health and Safety Code Section 13143.*

Residential. *All hotels, motels, lodging houses, apartment houses and dwellings, including congregate residences and buildings and structures accessory thereto. Multiple-story structures existing on January 1, 1975, let for human habitation, including and limited to, hotels, motels and apartment houses, less than 75 feet (22 860 mm) above the lowest floor level having building access, wherein rooms used for sleeping are let above the ground floor.*

Authority cited—*Health and Safety Code Sections 13143.2 and 17921.*

Reference—*Health and Safety Code Section 13143.*

Residential care facilities. *Certified family care homes, out-of-home placement facilities, halfway houses, drug and/or alcohol rehabilitation facilities and any building or structure used or intended for use as a home or institution for the housing of any person of any age when such person is referred to or placed within such home or institution for protective social care and supervision services by any governmental agency.*

Authority cited—*Health and Safety Code Section 13143.6.*

Reference—*Health and Safety Code Section 13143.*

Tents, awnings or other fabric enclosures used in connection with any occupancy.

Authority cited—*Health and Safety Code Section 13116.*

Reference—*Health and Safety Code Section 13143.*

Fire alarm devices, equipment and systems in connection with any occupancy.

Authority cited—*Health and Safety Code Section 13114.*

Reference—*Health and Safety Code Section 13143.*

Hazardous materials.

Authority cited—*Health and Safety Code Section 13143.9.*

Reference—*Health and Safety Code Section 13143.*

Flammable and combustible liquids.

Authority cited—*Health and Safety Code Section 13143.6.*

Reference—*Health and Safety Code Section 13143.*

Public school automatic fire detection, alarm and sprinkler systems.

Authority cited—*Health and Safety Code Section 13143 and California Education Code Article 7.5, Sections 17074.50, 17074.52 and 17074.54.*

Reference—*Government Code Section 11152.5, Health and Safety Code Section 13143 and California Education Code Chapter 12.5, Leroy F. Greene School Facilities Act of 1998, Article 1.*

Wildland-Urban interface fire area.

Authority cited—*Health and Safety Code Sections 13143, 13108.5(a) and 18949.2(b) and (c) and Government Code Section 51189.*

Reference—*Health and Safety Code Sections 13143, Government Code Sections 51176, 51177, 51178 and 51179 and Public Resources Code Sections 4201 through 4204.*

1.11.1.1 Adopting agency identification. *The provisions of this code applicable to buildings identified in this Subsection 1.11.1 will be identified in the Matrix Adoption Tables under the acronym SFM.*

1.11.2 Duties and powers of the enforcing agency.

1.11.2.1 Enforcement.

1.11.2.1.1 *The responsibility for enforcement of building standards adopted by the State Fire Marshal and published in the California Building Standards Code relating to fire and panic safety and other regulations of the State Fire Marshal shall except as provided in Section 1.11.2.1.2 be as follows:*

1. *The city, county, or city and county with jurisdiction in the area affected by the standard or regulation shall delegate the enforcement of the building standards relating to fire and panic safety and other regulations of the State Fire Marshal as they relate to Group R-3 occupancies, as described in Section 1.1.3.1 or CCR, Part 2 California Building Code, Section 310.1, to either of the following:*

   1.1. *The chief of the fire authority of the city, county or city and county, or an authorized representative.*

   1.2. *The chief building official of the city, county or city and county, or an authorized representative.*

2. *The chief of any city or county fire department or of any fire protection district, and authorized representatives, shall enforce within the jurisdiction the building standards and other regulations of the State Fire Marshal, except those described in Item 1 or 4.*

3. *The State Fire Marshal shall have authority to enforce the building standards and other regulations of the State Fire Marshal in areas outside of corporate cities and districts providing fire protection services.*

4. *The State Fire Marshal shall have authority to enforce the building standards and other regulations of the State Fire Marshal in corporate cities and districts providing fire protection services on request of the chief fire official or the governing body.*

5. *Any fee charged pursuant to the enforcement authority of this section shall not exceed the estimated reasonable cost of providing the service for which the fee is charged pursuant to Section 66014 of the Government Code.*

1.11.2.1.2 *Pursuant to Health and Safety Code Section 13108, and except as otherwise provided in this section, building standards adopted by the State Fire Marshal published in the California Building Standards Code relating to fire and panic safety shall be enforced by the State Fire Marshal in all state-owned buildings, state-occupied buildings and state institutions throughout the state. Upon the written request of the chief fire official of any city, county, or fire protection district, the State Fire Marshal may authorize such chief fire official and his or her authorized representatives, in their geographical area of responsibility, to make fire prevention inspections of state-owned or state-occupied buildings, other than state institutions, for the purpose of enforcing the regulations relating to fire and panic safety adopted by the State Fire Marshal pursuant to this section and building standards relating to fire and panic safety published in the California Building Standards Code. Authorization from the State Fire Marshal shall be limited to those fire departments or fire districts which maintain a fire prevention bureau staffed by paid personnel.*

Pursuant to Health and Safety Code Section 13108, any requirement or order made by any chief fire official who is authorized by the State Fire Marshal to make fire prevention inspections of state-owned or state-occupied buildings, other than state institutions, may be appealed to the State Fire Marshal. The State Fire Marshal shall, upon receiving an appeal and subject to the provisions of Chapter 5 (commencing with Section

18945) of Part 2.5 of Division 13 of the Health and Safety Code, determine if the requirement or order made is reasonably consistent with the fire and panic safety regulations adopted by the State Fire Marshal and building standards relating to fire and panic safety published in the California Building Code.

Any person may request a code interpretation from the State Fire Marshal relative to the intent of any regulation or provision adopted by the State Fire Marshal. When the request relates to a specific project, occupancy or building, the State Fire Marshal shall review the issue with the appropriate local enforcing agency prior to rendering such code interpretation.

1.11.2.1.3 *Pursuant to Health and Safety Code Section 13112, any person who violates any order, rule or regulation of the State Fire Marshal is guilty of a misdemeanor punishable by a fine of not less than $100.00 or more than $500.00, or by imprisonment for not less than six months, or by both. A person is guilty of a separate offense each day during which he or she commits, continues or permits a violation of any provision of, or any order, rule or regulation of, the State Fire Marshal as contained in this code.*

Any inspection authority who, in the exercise of his or her authority as a deputy State Fire Marshal, causes any legal complaints to be filed or any arrest to be made shall notify the State Fire Marshal immediately following such action.

1.11.2.2 Right of entry. *The fire chief of any city, county or fire protection district, or such person's authorized representative, may enter any state institution or any other state-owned or state-occupied building for the purpose of preparing a fire suppression preplanning program or for the purpose of investigating any fire in a state-occupied building.*

The State Fire Marshal, his or her deputies or salaried assistants, the chief of any city or county fire department or fire protection district and his or her authorized representatives may enter any building or premises not used for dwelling purposes at any reasonable hour for the purpose of enforcing this chapter. The owner, lessee, manager or operator of any such building or premises shall permit the State Fire Marshal, his or her deputies or salaried assistants and the chief of any city or county fire department or fire protection district and his or her authorized representatives to enter and inspect them at the time and for the purpose stated in this section.

1.11.2.3 More restrictive fire and panic safety building standards.

1.11.2.3.1 *Any fire protection district organized pursuant to Health and Safety Code Part 2.7 (commencing with Section 13800) of Division 12 may adopt building standards relating to fire and panic safety that are more stringent than those building standards adopted by the State Fire Marshal and contained in the California Building Standards Code. For these purposes, the district board shall be deemed a legislative body and the district shall be deemed a local agency. Any changes or modifications that are more stringent than the requirements published in the California Building Standards Code relating to fire and panic safety shall be subject to Section 1.1.8.1.*

1.11.2.3.2 *Any fire protection district that proposes to adopt an ordinance pursuant to this section shall, not less than 30 days prior to noticing a proposed ordinance for public hearing, provide a copy of that ordinance, together with the adopted findings made pursuant to Section 1.11.2.3.1, to the city, county, or city and county where the ordinance will apply. The city, county, or city and county may provide the district with written comments, which shall become part of the fire protection district's public hearing record.*

1.11.2.3.3 *The fire protection district shall transmit the adopted ordinance to the city, county, or city and county where the ordinance will apply. The legislative body of the city, county, or city and county may ratify, modify or deny an adopted ordinance and transmit its determination to the district within 15 days of the determination. Any modification or denial of an adopted ordinance shall include a written statement describing the reasons for any modifications or denial. No ordinance adopted by the district shall be effective until ratification by the city, county, or city and county where the ordinance will apply. Upon ratification of an adopted ordinance, the city, county, or city and county shall file a copy of the findings of the district, and any findings of the city, county, or city and county, together with the adopted ordinance expressly marked and identified to which each finding refers, in accordance with Section 1.1.8.1:3.*

1.11.2.4 Request for alternate means of protection. *Requests for approval to use an alternative material, assembly or materials, equipment, method of construction, method of installation of equipment or means of protection shall be made in writing to the enforcing agency by the owner or the owner's authorized representative and shall be accompanied by a full statement of the conditions. Sufficient evidence or proof shall be submitted to substantiate any claim that may be made regarding its conformance. The enforcing agency may require tests and the submission of a test report from an approved testing organization as set forth in Title 19, California Code of Regulation, to substantiate the equivalency of the proposed alternative means of protection.*

When a request for alternate means of protection involves hazardous materials, the authority having jurisdiction may consider implementation of the findings and recommendations identified in a Risk Management Plan (RMP) developed in accordance with Title 19, Division 2, Chapter 4.5, Article 3.

Approval of a request for use of an alternative material, assembly of materials, equipment, method of construction, method of installation of equipment or means of protection made pursuant to these provisions shall be limited to the particular case covered by request and shall not be construed as establishing any precedent for any future request.

1.11.2.5 Appeals. *When a request for an alternate means of protection has been denied by the enforcing agency, the*

applicant may file a written appeal to the State Fire Marshal for consideration of the applicant's proposal. In considering such appeal, the State Fire Marshal may seek the advice of the State Board of Fire Services. The State Fire Marshal shall, after considering all of the facts presented, including any recommendations of the State Board of Fire Services, determine if the proposal is for the purposes intended, at least equivalent to that specified in these regulations in quality, strength, effectiveness, fire resistance, durability and safety, and shall transmit such findings and any recommendations to the applicant and to the enforcing agency.

1.11.3 Construction documents.

1.11.3.1 Public schools. *Plans and specifications for the construction, alteration or addition to any building owned, leased or rented by any public school district shall be submitted to the Division of the State Architect.*

1.11.3.2 Movable walls and partitions. *Plans or diagrams shall be submitted to the enforcing agency for approval before the installation of, or rearrangement of, any movable wall or partition in any occupancy. Approval shall be granted only if there is no increase in the fire hazard.*

1.11.3.3 New construction high-rise buildings.

1. *Complete plans or specifications, or both, shall be prepared covering all work required to comply with new construction high-rise buildings. Such plans and specifications shall be submitted to the enforcing agency having jurisdiction.*
2. *All plans and specifications shall be prepared under the responsible charge of an architect or a civil or structural engineer authorized by law to develop construction plans and specifications, or by both such architect and engineer. Plans and specifications shall be prepared by an engineer duly qualified in that branch of engineering necessary to perform such services. Administration of the work of construction shall be under the charge of the responsible architect or engineer except that where plans and specifications involve alterations or repairs, such work of construction may be administered by an engineer duly qualified to perform such services and holding a valid certificate under Chapter 7 (commencing with Section 65700) of Division 3 of the Business and Professions Code for performance of services in that branch of engineering in which said plans, specifications and estimates and work of construction are applicable.*

This section shall not be construed as preventing the design of fire-extinguishing systems by persons holding a C-16 license issued pursuant to Division 3, Chapter 9, Business and Professions Code. In such instances, however, the responsibility charge of this section shall prevail.

1.11.3.4 Existing high-rise buildings.

1. *Complete plans or specifications, or both, shall be prepared covering all work required by Chapter 11 of the California Fire Code and the California Existing Building Code for existing high-rise buildings. Such plans or specifications shall be submitted to the enforcing agency having jurisdiction.*
2. *When new construction is required to conform with the provisions of these regulations, complete plans or specifications, or both, shall be prepared in accordance with the provisions of this subsection. As used in this section, "new construction" is not intended to include repairs, replacements or minor alterations which do not disrupt or appreciably add to or affect the structural aspects of the building.*

1.11.3.5 Retention of plans. *Refer to Building Standards Law, Health and Safety Code Sections 19850 and 19851 for permanent retention of plans.*

1.11.4 Fees.

1.11.4.1 Other fees. *Pursuant to Health and Safety Code Section 13146.2, a city, county or district which inspects a hotel, motel, lodging house or apartment house may charge and collect a fee for the inspection from the owner of the structure in an amount, as determined by the city, county or district, sufficient to pay its costs of that inspection.*

1.11.4.2 Large family day-care. *Pursuant to Health and Safety Code Section 1597.46, Large Family Day-Care Homes, the local government shall process any required permit as economically as possible, and fees charged for review shall not exceed the costs of the review and permit process.*

1.11.4.3 High-rise. *Pursuant to Health and Safety Code Section 13217, High-rise Structure Inspection: Fees and costs, a local agency which inspects a high-rise structure pursuant to Health and Safety Code Section 13217 may charge and collect a fee for the inspection from the owner of the high-rise structure in an amount, as determined by the local agency, sufficient to pay its costs of that inspection.*

1.11.4.4 Fire clearance preinspection. *Pursuant to Health and Safety Code Section 13235, Fire Clearance Preinspection, fee, upon receipt of a request from a prospective licensee of a community care facility, as defined in Section 1502, of a residential care facility for the elderly, as defined in Section 1569.2, or of a child day-care facility, as defined in Section 1596.750, the local fire enforcing agency, as defined in Section 13244, or State Fire Marshal, whichever has primary jurisdiction, shall conduct a preinspection of the facility prior to the final fire clearance approval. At the time of the preinspection, the primary fire enforcing agency shall price consultation and interpretation of the fire safety regulations and shall notify the prospective licensee of the facility in writing of the specific fire safety regulations which shall be enforced in order to obtain fire clearance approval. A fee equal to, but not exceeding, the actual cost of the preinspection services may be charged for the preinspection of a facility with a capacity to serve 25 or fewer persons. A fee equal to, but not exceeding, the actual cost of the preinspection services may be charged for a preinspection of a facility with a capacity to serve 26 or more persons.*

1.11.4.5 Care facilities. *The primary fire enforcing agency shall complete the final fire clearance inspection for a community care facility, residential care facility for the elderly, or child day-care facility within 30 days of receipt of the request for the final inspection, or as of the date the prospective facility requests the final prelicensure inspection by the State Department of Social Services, whichever is later.*

Pursuant to Health and Safety Code Section 13235, a preinspection fee equal to, but not exceeding, the actual cost of the preinspection services may be charged for a facility with a capacity to serve 25 or less clients. A fee equal to, but not exceeding, the actual cost of the preinspection services may be charged for a preinspection of a facility with a capacity to serve 26 or more clients.

Pursuant to Health and Safety Code Section 13131.5, a reasonable final inspection fee, not to exceed the actual cost of inspection services necessary to complete a final inspection may be charged for occupancies classified as residential care facilities for the elderly (RCFE).

Pursuant to Health and Safety Code Section 1569.84, neither the State Fire Marshal nor any local public entity shall charge any fee for enforcing fire inspection regulations pursuant to state law or regulation or local ordinance, with respect to residential care facilities for the elderly (RCFE) which service six or fewer persons.

1.11.4.6 Requests of the Office of the State Fire Marshal. *Whenever a local authority having jurisdiction requests that the State Fire Marshal perform plan review and/or inspection services related to a building permit, the applicable fees for such shall be payable to the Office of the State Fire Marshal.*

1.11.5 Inspections. *Work performed subject to the provisions of this code shall comply with the inspection requirements of Sections R109.1 through R109.1.6.*

1.11.5.1 Existing Group I -1 or R occupancies. *Licensed 24-hour care in a Group I-1 or R occupancy in existence and originally classified under previously adopted state codes shall be reinspected under the appropriate previous code, provided there is no change in the use or character which would place the facility in a different occupancy group.*

1.11.6 Certificate of occupancy. *A certificate of occupancy shall be issued as specified in Section R110.*

1.11.7 Temporary structures and uses. *See Section R107.*

1.11.8 Service utilities. *See Section R111.*

1.11.9 Stop work order. *See Section R114.*

1.11.10 Unsafe buildings, structures and equipment. *See Title 24, Part 2, California Building Code, Section 115.*

SECTION 1.12
Reserved

SECTION 1.13
Reserved

SECTION 1.14
Reserved

DIVISION II
ADMINISTRATION

Division II is not adopted by the Department of Housing and Community Development or the State Fire Marshal except where specifically indicated.

SECTION R101
GENERAL

R101.1 Title. These provisions shall be known as the *Residential Code for One- and Two-family Dwellings* of **[NAME OF JURISDICTION]**, and shall be cited as such and will be referred to herein as "this code."

R101.2 Scope. The provisions of this code shall apply to the construction, alteration, movement, enlargement, replacement, repair, equipment, use and occupancy, location, removal and demolition of detached one- and two-family dwellings and townhouses not more than three stories above grade plane in height with a separate means of egress and their accessory structures not more than three stories above grade plane in height.

Exception: The following shall be permitted to be constructed in accordance with this code where provided with a residential fire sprinkler system complying with Section *R313*:

1. Live/work units located in townhouses and complying with the requirements of Section 419 of the *California Building Code.*
2. Owner-occupied lodging houses with five or fewer guestrooms.
3. A care facility with five or fewer persons receiving custodial care within a dwelling unit.
4. A care facility with five or fewer persons receiving medical care within a dwelling unit.
5. A care facility for five or fewer persons receiving care that are within a single-family dwelling.

R101.3 Intent. The purpose of this code is to establish minimum requirements to safeguard the public safety, health and general welfare through affordability, structural strength, means of egress facilities, stability, sanitation, light and ventilation, energy conservation and safety to life and property from fire and other hazards attributed to the built environment, and to provide safety to fire fighters and emergency responders during emergency operations.

SECTION R102
APPLICABILITY

R102.1 General. Where there is a conflict between a general requirement and a specific requirement, the specific requirement shall be applicable. Where, in any specific case, different sections of this code specify different materials, methods of construction or other requirements, the most restrictive shall govern.

R102.2 Other laws. The provisions of this code shall not be deemed to nullify any provisions of local, state or federal law.

R102.3 Application of references. References to chapter or section numbers, or to provisions not specifically identified by number, shall be construed to refer to such chapter, section or provision of this code.

R102.4 Referenced codes and standards. The codes and standards referenced in this code shall be considered part of the requirements of this code to the prescribed extent of each such reference and as further regulated in Sections R102.4.1 and R102.4.2.

Exception: Where enforcement of a code provision would violate the conditions of the listing of the equipment or appliance, the conditions of the listing and manufacturer's instructions shall apply.

R102.4.1 Conflicts. Where conflicts occur between provisions of this code and referenced codes and standards, the provisions of this code shall apply.

R102.4.2 Provisions in referenced codes and standards. Where the extent of the reference to a referenced code or standard includes subject matter that is within the scope of this code, the provisions of this code, as applicable, shall take precedence over the provisions in the referenced code or standard.

R102.5 Appendices. Provisions in the appendices shall not apply unless specifically referenced in the adopting ordinance.

R102.6 Partial invalidity. In the event any part or provision of this code is held to be illegal or void, this shall not have the effect of making void or illegal any of the other parts or provisions.

R102.7 Existing structures. The legal occupancy of any structure existing on the date of adoption of this code shall be permitted to continue without change, except as is specifically covered in this code, the *International Property Maintenance Code* or the *California Fire Code*, or as is deemed necessary by the building official for the general safety and welfare of the occupants and the public.

R102.7.1 Additions, alterations or repairs. Additions, alterations or repairs to any structure shall conform to the requirements for a new structure without requiring the existing structure to comply with the requirements of this code, unless otherwise stated. Additions, alterations, repairs and relocations shall not cause an existing structure to become unsafe or adversely affect the performance of the building.

SECTION R103
DEPARTMENT OF BUILDING SAFETY

R103.1 Creation of enforcement agency. The department of building safety is hereby created and the official in charge thereof shall be known as the building official.

R103.2 Appointment. The building official shall be appointed by the jurisdiction.

R103.3 Deputies. In accordance with the prescribed procedures of this jurisdiction and with the concurrence of the appointing authority, the building official shall have the authority to appoint a deputy building official, the related technical officers, inspectors, plan examiners and other employees. Such employees shall have powers as delegated by the building official.

SECTION R104
DUTIES AND POWERS OF THE BUILDING OFFICIAL

R104.1 General. The building official is hereby authorized and directed to enforce the provisions of this code. The building official shall have the authority to render interpretations of this code and to adopt policies and procedures in order to clarify the application of its provisions. Such interpretations, policies and procedures shall be in compliance with the intent and purpose of this code. Such policies and procedures shall not have the effect of waiving requirements specifically provided for in this code.

R104.2 Applications and permits. The building official shall receive applications, review construction documents and issue permits for the erection and alteration of buildings and structures, inspect the premises for which such permits have been issued and enforce compliance with the provisions of this code.

R104.3 Notices and orders. The building official shall issue necessary notices or orders to ensure compliance with this code.

R104.4 Inspections. The building official shall make the required inspections, or the building official shall have the authority to accept reports of inspection by approved agencies or individuals. Reports of such inspections shall be in writing and be certified by a responsible officer of such approved agency or by the responsible individual. The building official is authorized to engage such expert opinion as deemed necessary to report on unusual technical issues that arise, subject to the approval of the appointing authority.

R104.5 Identification. The building official shall carry proper identification when inspecting structures or premises in the performance of duties under this code.

R104.6 Right of entry. Where it is necessary to make an inspection to enforce the provisions of this code, or where the building official has reasonable cause to believe that there exists in a structure or upon a premises a condition that is contrary to or in violation of this code that makes the structure or premises unsafe, dangerous or hazardous, the building official or designee is authorized to enter the structure or premises at reasonable times to inspect or to perform the duties imposed by this code, provided that if such structure or premises be occupied that credentials be presented to the occupant and entry requested. If such structure or premises is unoccupied, the building official shall first make a reasonable effort to locate the owner, the owner's authorized agent, or other person having charge or control of the structure or premises and request entry. If entry is refused, the building official shall have recourse to the remedies provided by law to secure entry.

R104.7 Department records. The building official shall keep official records of applications received, permits and certificates issued, fees collected, reports of inspections, and notices and orders issued. Such records shall be retained in the official records for the period required for the retention of public records.

R104.8 Liability. The building official, member of the board of appeals or employee charged with the enforcement of this code, while acting for the jurisdiction in good faith and without malice in the discharge of the duties required by this code or other pertinent law or ordinance, shall not thereby be rendered civilly or criminally liable personally and is hereby relieved from personal liability for any damage accruing to persons or property as a result of any act or by reason of an act or omission in the discharge of official duties.

R104.8.1 Legal defense. Any suit or criminal complaint instituted against an officer or employee because of an act performed by that officer or employee in the lawful discharge of duties and under the provisions of this code shall be defended by legal representatives of the jurisdiction until the final termination of the proceedings. The building official or any subordinate shall not be liable for cost in any action, suit or proceeding that is instituted in pursuance of the provisions of this code.

R104.9 Approved materials and equipment. Materials, equipment and devices approved by the building official shall be constructed and installed in accordance with such approval.

R104.9.1 Used materials and equipment. Used materials, equipment and devices shall not be reused unless approved by the building official.

R104.10 Modifications. Where there are practical difficulties involved in carrying out the provisions of this code, the building official shall have the authority to grant modifications for individual cases, provided the building official shall first find that special individual reason makes the strict letter of this code impractical and the modification is in compliance with the intent and purpose of this code and that such modification does not lessen health, life and fire safety or structural requirements. The details of action granting modifications shall be recorded and entered in the files of the department of building safety.

R104.10.1 Flood hazard areas. The building official shall not grant modifications to any provisions required in flood hazard areas as established by Table R301.2(1) unless a determination has been made that:

1. There is good and sufficient cause showing that the unique characteristics of the size, configuration or

topography of the site render the elevation standards of Section R322 inappropriate.

2. Failure to grant the modification would result in exceptional hardship by rendering the lot undevelopable.
3. The granting of modification will not result in increased flood heights, additional threats to public safety, extraordinary public expense, cause fraud on or victimization of the public, or conflict with existing laws or ordinances.
4. The modification is the minimum necessary to afford relief, considering the flood hazard.
5. Written notice specifying the difference between the design flood elevation and the elevation to which the building is to be built, stating that the cost of flood insurance will be commensurate with the increased risk resulting from the reduced floor elevation and stating that construction below the design flood elevation increases risks to life and property, has been submitted to the applicant.

R104.11 Alternative materials, design and methods of construction and equipment. The provisions of this code are not intended to prevent the installation of any material or to prohibit any design or method of construction not specifically prescribed by this code. The building official shall have the authority to approve an alternative material, design or method of construction upon application of the owner or the owner's authorized agent. The building official shall first find that the proposed design is satisfactory and complies with the intent of the provisions of this code, and that the material, method or work offered is, for the purpose intended, not less than the equivalent of that prescribed in this code in quality, strength, effectiveness, fire resistance, durability and safety. Compliance with the specific performance-based provisions of the California Codes shall be an alternative to the specific requirements of this code. Where the alternative material, design or method of construction is not approved, the building official shall respond in writing, stating the reasons why the alternative was not approved.

R104.11.1 Tests. Where there is insufficient evidence of compliance with the provisions of this code, or evidence that a material or method does not conform to the requirements of this code, or in order to substantiate claims for alternative materials or methods, the building official shall have the authority to require tests as evidence of compliance to be made at no expense to the jurisdiction. Test methods shall be as specified in this code or by other recognized test standards. In the absence of recognized and accepted test methods, the building official shall approve the testing procedures. Tests shall be performed by an approved agency. Reports of such tests shall be retained by the building official for the period required for retention of public records.

SECTION R105
PERMITS

R105.1 Required. Any owner or owner's authorized agent who intends to construct, enlarge, alter, repair, move, demolish or change the occupancy of a building or structure, or to erect, install, enlarge, alter, repair, remove, convert or replace any electrical, gas, mechanical or plumbing system, the installation of which is regulated by this code, or to cause any such work to be performed, shall first make application to the building official and obtain the required permit.

R105.2 Work exempt from permit. Exemption from permit requirements of this code shall not be deemed to grant authorization for any work to be done in any manner in violation of the provisions of this code or any other laws or ordinances of this jurisdiction. Permits shall not be required for the following:

Building:

1. One-story detached accessory structures, provided that the floor area does not exceed *120 square feet (11.15 m²).*
2. Fences not over 7 feet (2134 mm) high.
3. Retaining walls that are not over 4 feet (1219 mm) in height measured from the bottom of the footing to the top of the wall, unless supporting a surcharge.
4. Water tanks supported directly upon grade if the capacity does not exceed 5,000 gallons (18 927 L) and the ratio of height to diameter or width does not exceed 2 to 1.
5. Sidewalks and driveways.
6. Painting, papering, tiling, carpeting, cabinets, counter tops and similar finish work.
7. Prefabricated swimming pools that are less than 24 inches (610 mm) deep.
8. Swings and other playground equipment.
9. Window awnings supported by an exterior wall that do not project more than 54 inches (1372 mm) from the exterior wall and do not require additional support.
10. Decks not exceeding 200 square feet (18.58 m^2) in area, that are not more than 30 inches (762 mm) above grade at any point, are not attached to a dwelling and do not serve the exit door required by Section R311.4.

Electrical:

1. Listed cord-and-plug connected temporary decorative lighting.
2. Reinstallation of attachment plug receptacles but not the outlets therefor.
3. Replacement of branch circuit overcurrent devices of the required capacity in the same location.

4. Electrical wiring, devices, appliances, apparatus or equipment operating at less than 25 volts and not capable of supplying more than 50 watts of energy.
5. Minor repair work, including the replacement of lamps or the connection of approved portable electrical equipment to approved permanently installed receptacles.

Gas:

1. Portable heating, cooking or clothes drying appliances.
2. Replacement of any minor part that does not alter approval of equipment or make such equipment unsafe.
3. Portable-fuel-cell appliances that are not connected to a fixed piping system and are not interconnected to a power grid.

Mechanical:

1. Portable heating appliances.
2. Portable ventilation appliances.
3. Portable cooling units.
4. Steam, hot- or chilled-water piping within any heating or cooling equipment regulated by this code.
5. Replacement of any minor part that does not alter approval of equipment or make such equipment unsafe.
6. Portable evaporative coolers.
7. Self-contained refrigeration systems containing 10 pounds (4.54 kg) or less of refrigerant or that are actuated by motors of 1 horsepower (746 W) or less.
8. Portable-fuel-cell appliances that are not connected to a fixed piping system and are not interconnected to a power grid.

Plumbing:

1. The stopping of leaks in drains, water, soil, waste or vent pipe; provided, however, that if any concealed trap, drainpipe, water, soil, waste or vent pipe becomes defective and it becomes necessary to remove and replace the same with new material, such work shall be considered as new work and a permit shall be obtained and inspection made as provided in this code.
2. The clearing of stoppages or the repairing of leaks in pipes, valves or fixtures, and the removal and reinstallation of water closets, provided such repairs do not involve or require the replacement or rearrangement of valves, pipes or fixtures.

R105.2.1 Emergency repairs. Where equipment replacements and repairs must be performed in an emergency situation, the permit application shall be submitted within the next working business day to the building official.

R105.2.2 Repairs. Application or notice to the building official is not required for ordinary repairs to structures, replacement of lamps or the connection of approved portable electrical equipment to approved permanently installed receptacles. Such repairs shall not include the cutting away of any wall, partition or portion thereof, the removal or cutting of any structural beam or load-bearing support, or the removal or change of any required means of egress, or rearrangement of parts of a structure affecting the egress requirements; nor shall ordinary repairs include addition to, alteration of, replacement or relocation of any water supply, sewer, drainage, drain leader, gas, soil, waste, vent or similar piping, electric wiring or mechanical or other work affecting public health or general safety.

R105.2.3 Public service agencies. A permit shall not be required for the installation, alteration or repair of generation, transmission, distribution, metering or other related equipment that is under the ownership and control of public service agencies by established right.

R105.3 Application for permit. To obtain a permit, the applicant shall first file an application therefor in writing on a form furnished by the department of building safety for that purpose. Such application shall:

1. Identify and describe the work to be covered by the permit for which application is made.
2. Describe the land on which the proposed work is to be done by legal description, street address or similar description that will readily identify and definitely locate the proposed building or work.
3. Indicate the use and occupancy for which the proposed work is intended.
4. Be accompanied by construction documents and other information as required in Section R106.1.
5. State the valuation of the proposed work.
6. Be signed by the applicant or the applicant's authorized agent.
7. Give such other data and information as required by the building official.

R105.3.1 Action on application. The building official shall examine or cause to be examined applications for permits and amendments thereto within a reasonable time after filing. If the application or the construction documents do not conform to the requirements of pertinent laws, the building official shall reject such application in writing stating the reasons therefor. If the building official is satisfied that the proposed work conforms to the requirements of this code and laws and ordinances applicable thereto, the building official shall issue a permit therefor as soon as practicable.

R105.3.1.1 Determination of substantially improved or substantially damaged existing buildings in flood hazard areas. For applications for reconstruction, rehabilitation, addition, alteration, repair or other improvement of existing buildings or structures located in a flood hazard area as established by Table R301.2(1), the building official shall examine or cause to be examined the construction documents and shall make a determination with regard to the value of the proposed work. For buildings that

have sustained damage of any origin, the value of the proposed work shall include the cost to repair the building or structure to its predamaged condition. If the building official finds that the value of proposed work equals or exceeds 50 percent of the market value of the building or structure before the damage has occurred or the improvement is started, the proposed work is a substantial improvement or repair of substantial damage and the building official shall require existing portions of the entire building or structure to meet the requirements of Section R322.

For the purpose of this determination, a substantial improvement shall mean any repair, reconstruction, rehabilitation, addition or improvement of a building or structure, the cost of which equals or exceeds 50 percent of the market value of the building or structure before the improvement or repair is started. Where the building or structure has sustained substantial damage, repairs necessary to restore the building or structure to its predamaged condition shall be considered substantial improvements regardless of the actual repair work performed. The term shall not include either of the following:

1. Improvements to a building or structure that are required to correct existing health, sanitary or safety code violations identified by the building official and that are the minimum necessary to ensure safe living conditions.
2. Any alteration of a historic building or structure, provided that the alteration will not preclude the continued designation as a historic building or structure. For the purposes of this exclusion, a historic building shall be any of the following:
   - 2.1. Listed or preliminarily determined to be eligible for listing in the National Register of Historic Places.
   - 2.2. Determined by the Secretary of the U.S. Department of Interior as contributing to the historical significance of a registered historic district or a district preliminarily determined to qualify as an historic district.
   - 2.3. Designated as historic under a state or local historic preservation program that is approved by the Department of Interior.

R105.3.2 Time limitation of application. An application for a permit for any proposed work shall be deemed to have been abandoned 180 days after the date of filing unless such application has been pursued in good faith or a permit has been issued; except that the building official is authorized to grant one or more extensions of time for additional periods not exceeding 180 days each. The extension shall be requested in writing and justifiable cause demonstrated.

R105.4 Validity of permit. The issuance or granting of a permit shall not be construed to be a permit for, or an approval of, any violation of any of the provisions of this code or of any other ordinance of the jurisdiction. Permits presuming to give authority to violate or cancel the provisions of this code or other ordinances of the jurisdiction shall not be valid. The issuance of a permit based on construction documents and other data shall not prevent the building official from requiring the correction of errors in the construction documents and other data. The building official is authorized to prevent occupancy or use of a structure where in violation of this code or of any other ordinances of this jurisdiction.

R105.5 Expiration. Every permit issued shall become invalid unless the work authorized by such permit is commenced within 180 days after its issuance or after commencement of work if more than 180 days pass between inspections. The building official is authorized to grant, in writing, one or more extensions of time, for periods not more than 180 days each. The extension shall be requested in writing and justifiable cause demonstrated.

R105.6 Suspension or revocation. The building official is authorized to suspend or revoke a permit issued under the provisions of this code wherever the permit is issued in error or on the basis of incorrect, inaccurate or incomplete information, or in violation of any ordinance or regulation or any of the provisions of this code.

R105.7 Placement of permit. The building permit or a copy shall be kept on the site of the work until the completion of the project.

R105.8 Responsibility. It shall be the duty of every person who performs work for the installation or repair of building, structure, electrical, gas, mechanical or plumbing systems, for which this code is applicable, to comply with this code.

R105.9 Preliminary inspection. Before issuing a permit, the building official is authorized to examine or cause to be examined buildings, structures and sites for which an application has been filed.

SECTION R106
CONSTRUCTION DOCUMENTS

R106.1 Submittal documents. Submittal documents consisting of construction documents, and other data shall be submitted in two or more sets with each application for a permit. The construction documents shall be prepared by a registered design professional where required by the statutes of the jurisdiction in which the project is to be constructed. Where special conditions exist, the building official is authorized to require additional construction documents to be prepared by a registered design professional.

Exception: The building official is authorized to waive the submission of construction documents and other data not required to be prepared by a registered design professional if it is found that the nature of the work applied for is such that reviewing of construction documents is not necessary to obtain compliance with this code.

R106.1.1 Information on construction documents. Construction documents shall be drawn upon suitable material. Electronic media documents are permitted to be submitted

where approved by the building official. Construction documents shall be of sufficient clarity to indicate the location, nature and extent of the work proposed and show in detail that it will conform to the provisions of this code and relevant laws, ordinances, rules and regulations, as determined by the building official.

R106.1.2 Manufacturer's installation instructions. Manufacturer's installation instructions, as required by this code, shall be available on the job site at the time of inspection.

R106.1.3 Information on braced wall design. For buildings and structures utilizing braced wall design, and where required by the building official, braced wall lines shall be identified on the construction documents. Pertinent information including, but not limited to, bracing methods, location and length of braced wall panels and foundation requirements of braced wall panels at top and bottom shall be provided.

R106.1.4 Information for construction in flood hazard areas. For buildings and structures located in whole or in part in flood hazard areas as established by Table R301.2(1), construction documents shall include:

1. Delineation of flood hazard areas, floodway boundaries and flood zones and the design flood elevation, as appropriate.
2. The elevation of the proposed lowest floor, including basement; in areas of shallow flooding (AO Zones), the height of the proposed lowest floor, including basement, above the highest adjacent *grade.*
3. The elevation of the bottom of the lowest horizontal structural member in coastal high-hazard areas (V Zone) and in Coastal A Zones where such zones are delineated on flood hazard maps identified in Table R301.2(1) or otherwise delineated by the jurisdiction.
4. If design flood elevations are not included on the community's Flood Insurance Rate Map (FIRM), the building official and the applicant shall obtain and reasonably utilize any design flood elevation and floodway data available from other sources.

R106.1.5 Exterior balconies and elevated walking surfaces. *Where balconies or other elevated walking surfaces are exposed to water from direct or blowing rain, snow, or irrigation, and the structural framing is protected by an impervious moisture barrier, the construction documents shall include details for all elements of the impervious moisture barrier system. The construction documents shall include manufacturer's installation instructions.*

R106.2 Site plan or plot plan. The construction documents submitted with the application for permit shall be accompanied by a site plan showing the size and location of new construction and existing structures on the site and distances from lot lines. In the case of demolition, the site plan shall show construction to be demolished and the location and size of existing structures and construction that are to remain on the site or plot. The building official is authorized to waive or modify the requirement for a site plan where the application for permit is for alteration or repair or where otherwise warranted.

R106.3 Examination of documents. The building official shall examine or cause to be examined construction documents for code compliance.

R106.3.1 Approval of construction documents. Where the building official issues a permit, the construction documents shall be approved in writing or by a stamp that states "REVIEWED FOR CODE COMPLIANCE." One set of construction documents so reviewed shall be retained by the building official. The other set shall be returned to the applicant, shall be kept at the site of work and shall be open to inspection by the building official or a duly authorized representative.

R106.3.2 Previous approvals. This code shall not require changes in the construction documents, construction or designated occupancy of a structure for which a lawful permit has been heretofore issued or otherwise lawfully authorized, and the construction of which has been pursued in good faith within 180 days after the effective date of this code and has not been abandoned.

R106.3.3 Phased approval. The building official is authorized to issue a permit for the construction of foundations or any other part of a building or structure before the construction documents for the whole building or structure have been submitted, provided that adequate information and detailed statements have been filed complying with pertinent requirements of this code. The holder of such permit for the foundation or other parts of a building or structure shall proceed at the holder's own risk with the building operation and without assurance that a permit for the entire structure will be granted.

R106.4 Amended construction documents. Work shall be installed in accordance with the approved construction documents, and any changes made during construction that are not in compliance with the approved construction documents shall be resubmitted for approval as an amended set of construction documents.

R106.5 Retention of construction documents. One set of approved construction documents shall be retained by the building official for a period of not less than 180 days from date of completion of the permitted work, or as required by state or local laws.

SECTION R107
TEMPORARY STRUCTURES AND USES

R107.1 General. The building official is authorized to issue a permit for temporary structures and temporary uses. Such permits shall be limited as to time of service, but shall not be permitted for more than 180 days. The building official is authorized to grant extensions for demonstrated cause.

R107.2 Conformance. Temporary structures and uses shall conform to the structural strength, fire safety, means of egress, light, ventilation and sanitary requirements of this code as necessary to ensure the public health, safety and general welfare.

R107.3 Temporary power. The building official is authorized to give permission to temporarily supply and use power in part of an electric installation before such installation has been fully completed and the final certificate of completion has been issued. The part covered by the temporary certificate shall comply with the requirements specified for temporary lighting, heat or power in *the California Electrical Code.*

R107.4 Termination of approval. The building official is authorized to terminate such permit for a temporary structure or use and to order the temporary structure or use to be discontinued.

SECTION R108
FEES

R108.1 Payment of fees. A permit shall not be valid until the fees prescribed by law have been paid, nor shall an amendment to a permit be released until the additional fee, if any, has been paid.

R108.2 Schedule of permit fees. On buildings, structures, electrical, gas, mechanical and plumbing systems or alterations requiring a permit, a fee for each permit shall be paid as required, in accordance with the schedule as established by the applicable governing authority.

R108.3 Building permit valuations. Building permit valuation shall include total value of the work for which a permit is being issued, such as electrical, gas, mechanical, plumbing equipment and other permanent systems, including materials and labor.

R108.4 Related fees. The payment of the fee for the construction, alteration, removal or demolition for work done in connection to or concurrently with the work authorized by a building permit shall not relieve the applicant or holder of the permit from the payment of other fees that are prescribed by law.

R108.5 Refunds. The building official is authorized to establish a refund policy.

R108.6 Work commencing before permit issuance. Any person who commences work requiring a permit on a building, structure, electrical, gas, mechanical or plumbing system before obtaining the necessary permits shall be subject to a fee established by the applicable governing authority that shall be in addition to the required permit fees.

SECTION R109
INSPECTIONS

R109.1 Types of inspections. For on-site construction, from time to time the building official, upon notification from the permit holder or his agent, shall make or cause to be made any necessary inspections and shall either approve that portion of the construction as completed or shall notify the permit holder or his or her agent wherein the same fails to comply with this code. *The enforcing agency upon notification of the permit holder or their agent shall within a reasonable time make the inspections set forth in Sections R109.1.1, R109.1.1.1, R109.1.3, R109.1.4, R109.1.4.1, R109.1.4.2, R109.1.5, R109.1.5.1, R109.1.5.2, R109.1.5.3, R109.1.6, R109.1.6.1 and R109.1.6.2.*

***Note:** Reinforcing steel or structural framework of any part of any building or structure shall not be covered or concealed without first obtaining the approval of the enforcing agency.*

R109.1.1 Foundation inspection. Inspection of the foundation *and footings* shall be made after poles or piers are set or trenches or basement areas are excavated and any required forms erected and any required reinforcing steel is in place and supported prior to the placing of concrete. The foundation *or footings* inspection shall include excavations for thickened slabs intended for the support of bearing walls, partitions, structural supports, or equipment and special requirements for wood foundations. *Materials for the foundation shall be on the job site except where concrete is ready-mixed in accordance with ASTM C94. Under this circumstance, concrete is not required to be at the job site.*

R109.1.1.1 Concrete slab and under-floor inspection. *Concrete slab and under-floor inspections shall be made after in-slab or under-floor reinforcing steel and building service equipment, conduits, piping or other ancillary building trade products or equipment are installed, but before any concrete is placed or floor sheathing is installed, including the subfloor.*

R109.1.2 Plumbing, mechanical, gas and electrical systems inspection. Rough inspection of plumbing, mechanical, gas and electrical systems shall be made prior to covering or concealment, before fixtures or appliances are set or installed, and prior to framing inspection.

Exception: Backfilling of ground-source heat pump loop systems tested in accordance with Section M2105.28 prior to inspection shall be permitted.

R109.1.3 Floodplain inspections. For construction in flood hazard areas as established by Table R301.2(1), upon placement of the lowest floor, including basement, and prior to further vertical construction, the building official shall require submission of documentation, prepared and sealed by a registered design professional, of the elevation of the lowest floor, including basement, required in Section R322.

R109.1.4 Frame and masonry inspection. Inspection of framing and masonry construction shall be made after the roof, masonry, framing, firestopping, draftstopping and bracing are in place and after *chimneys and vents to be concealed are completed and the rough electrical, plumbing, heating, wires, pipes and ducts* are approved.

R109.1.4.1 Moisture content verification. *Moisture content of framing members shall be verified in accordance with the California Green Building Standards Code, Chapter 4, Division 4.5.*

R109.1.4.2 Lath and gypsum board inspection. *Lath and gypsum board inspections shall be made after lathing and gypsum board, interior and exterior, is in place, but before any plastering is applied or gypsum board joints and fasteners are taped and finished.*

R109.1.5 Other inspections. In addition to inspections in Sections R109.1.1 through *R109.1.4.2*, the building official shall have the authority to make or require any other inspections to ascertain compliance with this code and other laws enforced by the building official.

R109.1.5.1 Fire-resistance-rated construction inspection. Where fire-resistance-rated construction is required between dwelling units or due to location on property, the building official shall require an inspection of such construction after lathing or gypsum board or gypsum panel products are in place, but before any plaster is applied, or before board or panel joints and fasteners are taped and finished. *Protection of joints and penetrations in fire-resistance-rated assemblies shall not be concealed from view until inspected and approved.*

R109.1.5.2 Special inspections. *For special inspections, see California Building Code, Chapter 17.*

R109.1.5.3 Weather-exposed balcony and walking surface waterproofing. *Where balconies or other elevated walking surfaces are exposed to water from direct or blowing rain, snow, or irrigation, and the structural framing is protected by an impervious moisture barrier, all elements of the impervious moisture barrier system shall not be concealed until inspected and approved.*

Exception: *Where special inspections are provided in accordance with California Building Code Section 1705.1.1, Item 3.*

R109.1.6 Final inspection. Final inspection shall be made after the permitted work is complete and prior to occupancy.

R109.1.6.1 Elevation documentation. If located in a flood hazard area, the documentation of elevations required in Section R322.1.10 shall be submitted to the building official prior to the final inspection.

R109.1.6.2 Operation and maintenance manual. *At the time of final inspection, a manual, compact disc, web-based reference or other media acceptable to the enforcing agency shall be placed in the building in accordance with the California Green Building Standards Code, Chapter 4, Division 4.4.*

R109.2 Inspection agencies. The building official is authorized to accept reports of approved agencies, provided such agencies satisfy the requirements as to qualifications and reliability.

R109.3 Inspection requests. It shall be the duty of the permit holder or their agent to notify the building official that such work is ready for inspection. It shall be the duty of the person requesting any inspections required by this code to provide access to and means for inspection of such work.

R109.4 Approval required. Work shall not be done beyond the point indicated in each successive inspection without first obtaining the approval of the building official. The building official, upon notification, shall make the requested inspections and shall either indicate the portion of the construction that is satisfactory as completed, or shall notify the permit holder or an agent of the permit holder wherein the same fails to comply with this code. Any portions that do not comply shall be corrected and such portion shall not be covered or concealed until authorized by the building official.

SECTION R110
CERTIFICATE OF OCCUPANCY

R110.1 Use and occupancy. A building or structure shall not be used or occupied, and a change of occupancy or change of use of a building or structure or portion thereof shall not be made, until the building official has issued a certificate of occupancy therefor as provided herein. Issuance of a certificate of occupancy shall not be construed as an approval of a violation of the provisions of this code or of other ordinances of the jurisdiction. Certificates presuming to give authority to violate or cancel the provisions of this code or other ordinances of the jurisdiction shall not be valid.

Exceptions:

1. Certificates of occupancy are not required for work exempt from permits under Section R105.2.
2. Accessory buildings or structures.

R110.2 Change in use. Changes in the character or use of an existing structure shall not be made except as specified in *Chapter 11 of the California Fire Code and California Existing Building Code.*

R110.3 Certificate issued. After the building official inspects the building or structure and does not find violations of the provisions of this code or other laws that are enforced by the department of building safety, the building official shall issue a certificate of occupancy containing the following:

1. The building permit number.
2. The address of the structure.
3. The name and address of the owner or the owner's authorized agent.
4. A description of that portion of the structure for which the certificate is issued.
5. A statement that the described portion of the structure has been inspected for compliance with the requirements of this code.
6. The name of the building official.
7. The edition of the code under which the permit was issued.
8. If an automatic sprinkler system is provided and whether the sprinkler system is required.
9. Any special stipulations and conditions of the building permit.

R110.4 Temporary occupancy. The building official is authorized to issue a temporary certificate of occupancy before the completion of the entire work covered by the permit, provided that such portion or portions shall be occupied safely. The building official shall set a time period during which the temporary certificate of occupancy is valid.

R110.5 Revocation. The building official shall, in writing, suspend or revoke a certificate of occupancy issued under the provisions of this code wherever the certificate is issued in error, or on the basis of incorrect information supplied, or where it is determined that the building or structure or portion thereof is in violation of any ordinance or regulation or any of the provisions of this code.

SECTION R111
SERVICE UTILITIES

R111.1 Connection of service utilities. A person shall not make connections from a utility, source of energy, fuel or power to any building or system that is regulated by this code for which a permit is required, until approved by the building official.

R111.2 Temporary connection. The building official shall have the authority to authorize the temporary connection of the building or system to the utility, source of energy, fuel or power.

R111.3 Authority to disconnect service utilities. The building official shall have the authority to authorize disconnection of utility service to the building, structure or system regulated by this code and the referenced codes and standards set forth in Section R102.4 in case of emergency where necessary to eliminate an immediate hazard to life or property or where such utility connection has been made without the approval required by Section R111.1 or R111.2. The building official shall notify the serving utility and where possible the owner or the owner's authorized agent and occupant of the building, structure or service system of the decision to disconnect prior to taking such action. If not notified prior to disconnection, the owner, the owner's authorized agent or occupant of the building, structure or service system shall be notified in writing as soon as practical thereafter.

SECTION R112
BOARD OF APPEALS

R112.1 General. In order to hear and decide appeals of orders, decisions or determinations made by the building official relative to the application and interpretation of this code, there shall be and is hereby created a board of appeals. The building official shall be an ex officio member of said board but shall not have a vote on any matter before the board. The board of appeals shall be appointed by the governing body and shall hold office at its pleasure. The board shall adopt rules of procedure for conducting its business, and shall render decisions and findings in writing to the appellant with a duplicate copy to the building official.

R112.2 Limitations on authority. An application for appeal shall be based on a claim that the true intent of this code or the rules legally adopted thereunder have been incorrectly interpreted, the provisions of this code do not fully apply or an equally good or better form of construction is proposed. The board shall not have authority to waive requirements of this code.

R112.3 Qualifications. The board of appeals shall consist of members who are qualified by experience and training to pass judgement on matters pertaining to building construction and are not employees of the jurisdiction.

R112.4 Administration. The building official shall take immediate action in accordance with the decision of the board.

SECTION R113
VIOLATIONS

R113.1 Unlawful acts. It shall be unlawful for any person, firm or corporation to erect, construct, alter, extend, repair, move, remove, demolish or occupy any building, structure or equipment regulated by this code, or cause same to be done, in conflict with or in violation of any of the provisions of this code.

R113.2 Notice of violation. The building official is authorized to serve a notice of violation or order on the person responsible for the erection, construction, alteration, extension, repair, moving, removal, demolition or occupancy of a building or structure in violation of the provisions of this code, or in violation of a detail statement or a plan approved thereunder, or in violation of a permit or certificate issued under the provisions of this code. Such order shall direct the discontinuance of the illegal action or condition and the abatement of the violation.

R113.3 Prosecution of violation. If the notice of violation is not complied with in the time prescribed by such notice, the building official is authorized to request the legal counsel of the jurisdiction to institute the appropriate proceeding at law or in equity to restrain, correct or abate such violation, or to require the removal or termination of the unlawful occupancy of the building or structure in violation of the provisions of this code or of the order or direction made pursuant thereto.

R113.4 Violation penalties. Any person who violates a provision of this code or fails to comply with any of the requirements thereof or who erects, constructs, alters or repairs a building or structure in violation of the approved construction documents or directive of the building official, or of a permit or certificate issued under the provisions of this code, shall be subject to penalties as prescribed by law.

SECTION R114
STOP WORK ORDER

R114.1 Notice to owner or the owner's authorized agent. Upon notice from the building official that work on any building or structure is being executed contrary to the provisions of this code or in an unsafe and dangerous manner, such work shall be immediately stopped. The stop work order shall be in writing and shall be given to the owner of the property involved, or to the owner's authorized agent or to the person performing the work and shall state the conditions under which work will be permitted to resume.

R114.2 Unlawful continuance. Any person who shall continue any work in or about the structure after having been served with a stop work order, except such work as that person is directed to perform to remove a violation or unsafe condition, shall be subject to penalties as prescribed by law.

CALIFORNIA RESIDENTIAL CODE – MATRIX ADOPTION TABLE
CHAPTER 2 – DEFINITIONS

(Matrix Adoption Tables are nonregulatory, intended only as an aid to the code user. See Chapter 1 for state agency authority and building applications.)

Adopting agency	BSC	BSC-CG	SFM	HCD			DSA			OSHPD						BSCC	DPH	AGR	DWR	CEC	CA	SL	SLC
				1	2	1/AC	AC	SS	SS/CC	1	1R	2	3	4	5								
Adopt entire chapter																							
Adopt entire chapter as amended (amended sections listed below)				X	X																		
Adopt only those sections that are listed below			X																				
Chapter / Section																							
R201			X																				
R201.1			X																				
R201.2			X																				
R201.3			X	X																			
R201.4			X																				
ACCESSORY STRUCTURE			X																				
ADDITION			X	X																			
AGED HOME OR INSTITUTION			X																				
AIR-IMPERMEABLE INSULATION				X																			
ALTERATION			X	X																			
APPROVED			X	X																			
APPROVED AGENCY			X	X																			
APPROVED LISTING AGENCY			X	X																			
APPROVED TESTING AGENCY			X	X																			
ATTIC			X																				
ATTIC, HABITABLE			X																				
BASEMENT			X																				
BATTERY SYSTEM, STATIONARY STORAGE			X																				
BEDRIDDEN PERSON			X																				
BUILDING			X	X																			
BUILDING OFFICIAL			X	X																			
BUILT-UP ROOF COVERING			X																				
CARE AND SUPERVISION			X																				
CATASTROPHICALLY INJURED			X																				
CEILING HEIGHT			X																				
CHILD-CARE CENTER			X																				
CHILD OR CHILDREN			X																				
CHRONICALLY ILL			X																				
CLIMATE ZONES				X																			
CLOSET			X																				
COMBUSTIBLE MATERIAL			X																				
CONGREGATE LIVING HEALTH-FACILITY (CLHF)			X																				
CONGREGATE RESIDENCE			X																				
CONSTRUCTION DOCUMENTS			X																				
DAYCARE			X																				
DAY-CARE HOME, FAMILY			X																				
DAY-CARE HOME, LARGE FAMILY			X																				
DAY-CARE HOME, SMALL FAMILY			X																				
DEPARTMENT				X																			
DESIGN PROFESSIONAL			X																				

(continued)

CALIFORNIA RESIDENTIAL CODE – MATRIX ADOPTION TABLE
CHAPTER 2 – DEFINITIONS—continued

Adopting agency	BSC	BSC-CG	SFM	HCD			DSA			OSHPD						BSCC	DPH	AGR	DWR	CEC	CA	SL	SLC
				1	2	1/AC	AC	SS	SS/CC	1	1R	2	3	4	5								
Adopt entire chapter																							
Adopt entire chapter as amended (amended sections listed below)				X	X																		
Adopt only those sections that are listed below			X																				
Chapter / Section																							
DRAFT STOP			X																				
DUCT SYSTEM				X																			
DWELLING			X																				
DWELLING UNIT			X	X																			
EMERGENCY ESCAPE AND RESCUE OPENING			X																				
ENFORCEMENT				X																			
ENFORCEMENT AGENCY				X																			
ENFORCING AGENCY			X	X																			
EXTERIOR WALL			X																				
FAMILY				X																			
FENESTRATION				X																			
FIREBLOCKING			X																				
FIRE-RETARDANT-TREATED WOOD			X																				
FIRE SEPARATION DISTANCE			X																				
FLAME SPREAD			X																				
FLAME SPREAD INDEX			X																				
FULL-TIME CARE			X																				
GRADE			X																				
GRADE FLOOR OPENING			X																				
GRADE PLANE			X																				
GUARD *OR GUARDRAIL*				X																			
HABITABLE SPACE			X																				
HANDRAIL			X																				
HAZARDOUS LOCATION			X																				
HEIGHT, BUILDING			X																				
HEIGHT, STORY			X																				
IGNITION SOURCE			X																				
INFANT			X																				
INSULATING SHEATHING				*X*																			
LABEL			X																				
LABELED			X	X																			
LIMITED-DENSITY OWNER-BUILT RURAL DWELLINGS				X																			
LISTED			X	X																			
LISTING AGENCY				X	X																		
LIVE/WORK UNIT				X																			
LIVING SPACE			X																				
LODGING HOUSE				X																			
LOT			X																				
LOT LINE			X																				
MARK			X																				

(continued)

CALIFORNIA RESIDENTIAL CODE – MATRIX ADOPTION TABLE
CHAPTER 2 – DEFINITIONS—continued

Adopting agency	BSC	BSC-CG	SFM	HCD			DSA			OSHPD						BSCC	DPH	AGR	DWR	CEC	CA	SL	SLC
				1	2	1/AC	AC	SS	SS/CC	1	1R	2	3	4	5								
Adopt entire chapter																							
Adopt entire chapter as amended (amended sections listed below)				X	X																		
Adopt only those sections that are listed below			X																				
Chapter / Section																							
MASONRY UNIT				X																			
METAL ROOF PANEL			X																				
METAL ROOF SHINGLE			X																				
MEZZANINE, LOFT			X																				
MULTIPLE STATION SMOKE ALARM			X																				
NONAMBULATORY PERSONS			X																				
NONCOMBUSTIBLE MATERIAL			X																				
OCCUPIED SPACE			X																				
OWNER			X																				
PASSIVE SOLAR ENERGY COLLECTOR				X																			
PERSONS WITH INTELLECTUAL DISABILITIES, PROFOUNDLY OR SEVERELY			X																				
PROTECTIVE SOCIAL CARE FACILITY			X																				
PUBLIC WAY			X																				
RAMP			X																				
REPAIR			X	X																			
REROOFING			X	X																			
RESIDENTIAL CARE FACILITY FOR THE CHRONICALLY ILL (RCF/CI)			X																				
RESIDENTIAL CARE FACILITY FOR THE ELDERLY (RCFE)			X																				
RESIDENTIAL FACILITY (RF)			X																				
RESTRAINT			X																				
RISER																							
ROOF ASSEMBLY			X																				
ROOF COVERING			X																				
ROOF COVERING SYSTEM			X																				
ROOFDECK			X																				
ROOF RECOVER			X	X																			
ROOF REPAIR			X	X																			
ROOF REPLACEMENT				X																			
ROOFTOP STRUCTURE			X																				
SHALL			X																				
SINGLE STATION SMOKE ALARM			X																				
SMOKE-DEVELOPED INDEX			X																				
STAIR			X																				
STAIRWAY			X																				
STATE-OWNED/LEASED BUILDING			X																				

(continued

CALIFORNIA RESIDENTIAL CODE – MATRIX ADOPTION TABLE
CHAPTER 2 – DEFINITIONS—continued

Adopting agency	BSC	BSC-CG	SFM	HCD			DSA			OSHPD						BSCC	DPH	AGR	DWR	CEC	CA	SL	SLC
				1	2	1/AC	AC	SS	SS/CC	1	1R	2	3	4	5								
Adopt entire chapter																							
Adopt entire chapter as amended (amended sections listed below)				X	X																		
Adopt only those sections that are listed below			X																				
Chapter / Section																							
STORY			X																				
STORY ABOVE GRADE PLANE			X																				
STRUCTURE			X																				
SUNROOM				X																			
TERMINALLY ILL			X																				
TESTING AGENCY				X																			
TOWNHOUSE			X																				
VENTILATION				X																			

The state agency does not adopt sections identified with the following symbol: †

Part II—Definitions

CHAPTER 2

DEFINITIONS

User notes:

About this chapter: *Codes, by their very nature, are technical documents. Every word, term and punctuation mark can add to or change the meaning of a technical requirement. It is necessary to maintain a consensus on the specific meaning of each term contained in the code. Chapter 2 performs this function by stating clearly what specific terms mean for the purpose of the code.*

Code development reminder: *Code change proposals to definitions in this chapter preceded by a bracketed letter are considered by the IRC—Building Code Development Committee [RB], the IRC—Mechanical/Plumbing Code Development Committee [MP] or the IECC—Residential Code Development Committee [RE] during the Group B (2019) Code Development cycle. See page x for explanation.*

SECTION R201
GENERAL

R201.1 Scope. Unless otherwise expressly stated, the following words and terms shall, for the purposes of this code, have the meanings indicated in this chapter.

R201.2 Interchangeability. Words used in the present tense include the future; words in the masculine gender include the feminine and neuter; the singular number includes the plural and the plural, the singular.

R201.3 Terms defined in other codes. Where terms are not defined in this code such terms shall have the meanings ascribed in *the California Building Standards Code, Title 24, California Code of Regulations.*

R201.4 Terms not defined. Where terms are not defined through the methods authorized by this section, such terms shall have ordinarily accepted meanings such as the context implies.

For applications listed in Section 1.11 regulated by the Office of the State Fire Marshal, where terms are not defined through the methods authorized by this section, such terms shall have ordinarily accepted meanings such as the context implies. Webster's Third New International Dictionary of the English Language, Unabridged, shall be considered as providing ordinarily accepted meanings.

SECTION R202
DEFINITIONS

[RB] ACCESS (TO). That which enables a device, an appliance or equipment to be reached by ready access or by a means that first requires the removal or movement of a panel, door or similar obstruction.

[RB] ADDITION. An extension or increase in floor area, number of stories or height of a building or structure.

[RB] ADHERED STONE OR MASONRY VENEER. Stone or masonry veneer secured and supported through the adhesion of an approved bonding material applied to an approved backing.

AGED HOME OR INSTITUTION. *A facility used for the housing of persons 65 years of age or older in need of care and supervision. (See definition of "care aud supervision.")*

[RB] AIR-IMPERMEABLE INSULATION. An insulation having an air permanence equal to or less than 0.02 L/s-m^2 at 75 Pa pressure differential as tested in accordance with ASTM E2178 or E283.

[RB] ALTERATION. Any construction or renovation to an existing structure other than repair or addition.

[RB] ALTERNATING TREAD DEVICE. A device that has a series of steps between 50 and 70 degrees (0.87 and 1.22 rad) from horizontal, usually attached to a center support rail in an alternating manner so that the user does not have both feet on the same level at the same time.

[RB] ANCHORED STONE OR MASONRY VENEER. Stone or masonry veneer secured with approved mechanical fasteners to an approved backing.

[MP] ANCHORS. See "Supports."

[RB] APPROVED. Acceptable to the building official.

APPROVED. (HCD 1) *Meeting the approval of the enforcing agency, except as otherwise provided by law, when used in connection with any system, material, type of construction, fixture or appliance as the result of investigations and tests conducted by the agency, or by reason of accepted principles or tests by national authorities or technical, health, or scientific organizations or agencies.*

Notes:

1. *See Health and Safety Code Section 17920 for "Approved" as applied to residential construction and buildings or structures accessory thereto, as referenced in Section 1.8.2.1.1.*
2. *See Health and Safety Code Section 17921.1 for "Approved" as applied to the use of hotplates in*

residential construction referenced in Section 1.8.2.1.1.

3. *See Health and Safety Code Section 19966 for "Approved" as applied to factory-built housing as referenced in Section 1.8.3.2.5.*
4. *See Health and Safety Code Section 18201 for "Approved" as applied to mobilehome parks as referenced in Section 1.8.3.2.2.*
5. *See Health and Safety Code Section 18862.1 for "Approved" as applied to special occupancy parks as referenced in Section 1.8.3.2.3.*

[RB] APPROVED AGENCY. An established and recognized agency that is regularly engaged in conducting tests, furnishing inspection services or furnishing product certification, and has been approved by the building official. *(HCD 1) "Approved agency" shall mean "Listing agency" and "Testing agency."*

APPROVED LISTING AGENCY. *Any agency approved by the enforcing agency, unless otherwise provided by statute, which is in the business of listing and labeling and which makes available at least an annual published report of such listings in which specific information is included that the product has been tested to recognized standards and found to comply.*

[MP] APPROVED SOURCE. An independent person, firm or corporation, approved by the building official, who is competent and experienced in the application of engineering principles to materials, methods or systems analyses.

APPROVED TESTING AGENCY. *Any agency which is determined by the enforcing agency, except as otherwise provided by statute, to have adequate personnel and expertise to carry out the testing of systems, materials, and construction fixtures or appliances.*

[RB] ASPECT RATIO. The ratio of longest to shortest perpendicular dimensions, or for wall sections, the ratio of height to length.

[RB] ATTIC. The unfinished space between the ceiling assembly and the roof assembly.

[RB] ATTIC, HABITABLE. A finished or unfinished habitable space within an attic.

[RB] BASEMENT. A story that is not a story above grade plane. (see "Story above grade plane").

[RB] BASIC WIND SPEED. Three-second gust speed at 33 feet (10 058 mm) above the ground in Exposure C (see Section R301.2.1) as given in Figure R301.2(5)A.

[RB] BATTERY SYSTEM, STATIONARY STORAGE. A rechargeable energy storage system consisting of electrochemical storage batteries, battery chargers, controls and associated electrical equipment designed to provide electrical power to a building. The system is typically used to provide standby or emergency power, an uninterruptable power supply, load shedding, load sharing or similar capabilities.

BEDRIDDEN PERSON. *A person, requiring assistance in turning and repositioning in bed, or being unable to independently transfer to and from bed, except in facilities with appropriate and sufficient care staff, mechanical devices if necessary, and safety precautions as determined in Title 22 regulations, by the Director of Social Services or his or her designated representative. Persons who are unable to independently transfer to and from bed, but who do not need assistance to turn or reposition in bed, shall be considered nonambulatory.*

The Director of Social Services or his or her designated representative shall make the determination of the bedridden status of persons with developmental disabilities, in consultation with the Director of Developmental Services or his or her designated representative.

The Director of Social Services or his or her designated representative shall make the determination of the bedridden status of all other persons with disabilities who are not developmentally disabled.

[RB] BOND BEAM. A horizontal grouted element within masonry in which reinforcement is embedded.

[RB] BRACED WALL LINE. A straight line through the building plan that represents the location of the lateral resistance provided by the wall bracing.

[RB] BRACED WALL LINE, CONTINUOUSLY SHEATHED. A braced wall line with structural sheathing applied to all sheathable surfaces including the areas above and below openings.

[RB] BRACED WALL PANEL. A full-height section of wall constructed to resist in-plane shear loads through interaction of framing members, sheathing material and anchors. The panel's length meets the requirements of its particular bracing method, and contributes toward the total amount of bracing required along its braced wall line in accordance with Section R602.10.1.

[RB] BUILDING. Any one- or two-family dwelling or portion thereof, including townhouses, used or intended to be used for human habitation, for living, sleeping, cooking or eating purposes, or any combination thereof, or any accessory structure.

Exceptions: *For applications listed in Section 1.8.2 regulated by the Department of Housing and Community Development, "Building" shall not include the following:*

1. *Any mobilehome as defined in Health and Safety Code Section 18008.*
2. *Any manufactured home as defined in Health and Safety Code Section 18007.*
3. *Any commercial modular as defined in Health and Safety Code Section 18001.8 or any special purpose commercial modular as defined in Section 18012.5.*
4. *Any recreational vehicle as defined in Health and Safety Code Section 18010.*
5. *Any multifamily manufactured home as defined in Health and Safety Code Section 18008.7.*

For additional information, see Health and Safety Code Section 18908.

Note: *Building shall have the same meaning as defined in Health and Safety Code Sections 17920 and 18908 for the applications specified in Section 1.11.*

[RB] BUILDING, EXISTING. Existing building is a building erected prior to the adoption of this code, or one for which a legal building permit has been issued.

[RB] BUILDING LINE. The line established by law, beyond which a building shall not extend, except as specifically provided by law.

[RB] BUILDING OFFICIAL. The officer or other designated authority charged with the administration and enforcement of this code, or a duly authorized representative.

[RB] BUILDING-INTEGRATED PHOTOVOLTAIC PRODUCT. A building product that incorporates photovoltaic modules and functions as a component of the building envelope.

[RB] BUILDING-INTEGRATED PHOTOVOLTAIC ROOF PANEL (BIPV Roof Panel). A photovoltaic panel that functions as a component of the building envelope.

[RB] BUILT-UP ROOF COVERING. Two or more layers of felt cemented together and surfaced with a cap sheet, mineral aggregate, smooth coating or similar surfacing material.

[RB] CAP PLATE. The top plate of the double top plates used in structural insulated panel (SIP) construction. The cap plate is cut to match the panel thickness such that it overlaps the wood structural panel facing on both sides.

[RB] CARBON MONOXIDE ALARM. A single- or multiple-station alarm intended to detect carbon monoxide gas and alert occupants by a distinct audible signal. It incorporates a sensor, control components and an alarm notification appliance in a single unit.

[RB] CARBON MONOXIDE DETECTOR. A device with an integral sensor to detect carbon monoxide gas and transmit an alarm signal to a connected alarm control unit.

CARE AND SUPERVISION. *Any one or more of the following activities provided by a person or facility to meet the needs of the clients:*

Assistance in dressing, grooming, bathing and other personal hygiene

Assistance with taking medication

Central storing and/or distribution of medications

Arrangement of and assistance with medical and dental care

Maintenance of house rules for the protection of clients

Supervision of client schedules and activities

Maintenance and/or supervision of client cash resources or property

Monitoring food intake or special diets

Providing basic services required by applicable law and regulation to be provided by the licensee in order to obtain and maintain a community-care facility license

CATASTROPHICALLY INJURED. *A person whose origin of disability was acquired through trauma or nondegenerative neurologic illness, for whom it has been determined by the Department of Health Services Certification and Licensing that active rehabilitation would be beneficial.*

[RB] CEILING HEIGHT. The clear vertical distance from the finished floor to the finished ceiling.

[RB] CEMENT PLASTER. A mixture of portland or blended cement, Portland cement or blended cement and hydrated lime, masonry cement or plastic cement and aggregate and other approved materials as specified in this code.

[RB] CHANGE OF OCCUPANCY. A change in the use of a building or portion of a building that involves a change in the application of the requirements of this code.

CHILD OR CHILDREN. *A person or persons under the age of 18 years.*

CHILD-CARE CENTER. *Any facility of any capacity other than a large or small family day-care home as defined in these regulations in which less than 24-hour-per-day nonmedical supervision is provided for children in a group setting.*

[MP] CHIMNEY. A primary vertical structure containing one or more flues, for the purpose of carrying gaseous products of combustion and air from a fuel-burning appliance to the outside atmosphere.

CHRONICALLY ILL. *See "TERMINALLY ILL."*

[RB] CLADDING. The exterior materials that cover the surface of the building envelope that is directly loaded by the wind.

CLIMATE ZONES *are the 16 geographic areas of California for which the California Energy Commission has established typical weather data, prescriptive packages and energy budgets. Climate zones are defined by ZIP code and listed in Reference Joint Appendix JA2.*

[[RB] CLOSET. A small room or chamber used for storage.

[RB] COLLAPSIBLE SOILS. Soils that exhibit volumetric reduction in response to partial or full wetting under load.

[RB] COMBUSTIBLE MATERIAL. Any material not defined as noncombustible.

[MP] COMBUSTION AIR. The air provided to fuel-burning equipment including air for fuel combustion, draft hood dilution and ventilation of the equipment enclosure.

[RB] COMPRESSIBLE SOILS. Soils that exhibit volumetric reduction in response to the application of load even in the absence of wetting or drying.

[MP] CONDENSATE. The liquid that separates from a gas due to a reduction in temperature; for example, water that condenses from flue gases and water that condenses from air circulating through the cooling coil in air conditioning equipment.

[RB] CONDITIONED AIR. Air treated to control its temperature, relative humidity or quality.

CONGREGATE LIVING HEALTH FACILITY (CLHF) *means a residential home with a capacity, except as provided in paragraph (3), of no more than 12 beds, that provides inpatient care, including the following basic services: medical supervision, 24-hour skilled nursing and supportive care, pharmacy, dietary, social, recreational, and at least one type*

of service specified in paragraph (1). The primary need of congregate living health facility residents shall be for availability of skilled nursing care on a recurring, intermittent, extended, or continuous basis. This care is generally less intense than that provided in general acute care hospitals but more intense than that provided in skilled nursing facilities.

(1) Congregate living health facilities shall provide one of the following services:

(A) Services for persons who are mentally alert, persons with physical disabilities, who may be ventilator dependent.

(B) Services for persons who have a diagnosis of terminal illness, a diagnosis of a life-threatening illness, or both. Terminal illness means the individual has a life expectancy of six months or less as stated in writing by his or her attending physician and surgeon. A "life-threatening illness" means the individual has an illness that can lead to a possibility of a termination of life within five years or less as stated in writing by his or her attending physician and surgeon.

(C) Services for persons who are catastrophically and severely disabled. A person who is catastrophically and severely disabled means a person whose origin of disability was acquired through trauma or nondegenerative neurologic illness, for whom it has been determined that active rehabilitation would be beneficial and to whom these services are being provided. Services offered by a congregate living health facility to a person who is catastrophically disabled shall include, but not be limited to, speech, physical, and occupational therapy.

(2) A congregate living health facility license shall specify which of the types of persons described in paragraph (1) to whom a facility is licensed to provide services.

(3)(A) A facility operated by a city and county for the purposes of delivering services under this section may have a capacity of 59 beds.

(B) A congregate living health facility not operated by a city and county servicing persons who are terminally ill, persons who have been diagnosed with a life-threatening illness, or both, that is located in a county with a population of 500,000 or more persons, or located in a county of the 16th class pursuant to Section 28020 of the Government Code, may have not more than 25 beds for the purpose of serving persons who are terminally ill.

(C) A congregate living health facility not operated by a city and county serving persons who are catastrophically and severely disabled, as defined in subparagraph (C) of paragraph (1) that is located in a county of 500,000 or more persons may have not more than 12 beds for the purpose of serving persons who are catastrophically and severely disabled.

(4) A congregate living health facility shall have a noninstitutional, homelike environment.

CONGREGATE RESIDENCE. *Any building or portion thereof that contains facilities for living, sleeping and sanitation, as required by this code, and may include facilities for eating and cooking, for occupancy by other than a family. A congregate residence may be a shelter, convent, monastery, dormitory, fraternity or sorority house, but does not include jails, hospitals, nursing homes, hotels or lodging houses.*

[RB] CONSTRUCTION DOCUMENTS. Written, graphic and pictorial documents prepared or assembled for describing the design, location and physical characteristics of the elements of a project necessary for obtaining a building permit. Construction drawings shall be drawn to an appropriate scale.

[RB] CORE. The lightweight middle section of a structural insulated panel, composed of foam plastic insulation, that provides the link between the two facing shells.

[RB] CORROSION RESISTANCE. The ability of a material to withstand deterioration of its surface or its properties where exposed to its environment.

[RB] COURT. A space, open and unobstructed to the sky, located at or above grade level on a lot and bounded on three or more sides by walls or a building.

[RB] CRAWL SPACE. An underfloor space that is not a basement.

[RB] CRIPPLE WALL. A framed wall extending from the top of the foundation to the underside of the floor framing of the first story above grade plane.

[RB] CROSS-LAMINATED TIMBER. A prefabricated engineered wood product consisting of not less than three layers of solid-sawn lumber or structural composite lumber where the adjacent layers are cross-oriented and bonded with structural adhesive to form a solid wood element.

[RB] DALLE GLASS. A decorative composite glazing material made of individual pieces of glass that are embedded in a cast matrix of concrete or epoxy.

DAY-CARE *shall, for the purposes of these regulations, mean the care of persons during any period of a 24-hour day where permanent sleeping accommodations are not provided.*

Note: *"Day-care" shall not be construed to preclude the use of cots or mats for napping purposes, provided all employees, attendants and staff personnel are awake and on duty in the area where napping occurs.*

DAY-CARE HOME, FAMILY. *A home that regularly provides care, protection and supervision for 14 or fewer children, in the provider's own home, for periods of less than 24 hours per day, while the parents or guardians are away, and is either a large family day-care home or a small family day-care home.*

DAY-CARE HOME, LARGE FAMILY. *A provider's own home which is licensed to provide day care for periods less than 24 hours per day for nine to 14 persons, including children under the age of 10 years who reside at the home.*

DAY-CARE HOME, SMALL FAMILY. *A home which provides family day-care to eight or fewer children, including children under the age of 10 years who reside at the home, in the provider's own home, for periods of less than 24 hours per day. Small family day-care homes are exempted from*

state fire and life safety regulations other than those state and local standards applicable to Group R-3 Occupancies. [See Health and Safety Code, Section 13143 (b).]

[RB] DEAD LOADS. The weight of the materials of construction incorporated into the building, including but not limited to walls, floors, roofs, ceilings, stairways, built-in partitions, finishes, cladding, and other similarly incorporated architectural and structural items, and fixed service equipment.

[RB] DECORATIVE GLASS. A carved, leaded or Dalle glass or glazing material with a purpose that is decorative or artistic, not functional; with coloring, texture or other design qualities or components that cannot be removed without destroying the glazing material; and with a surface, or assembly into which it is incorporated, that is divided into segments.

DEPARTMENT. *The Department of Housing and Community Development.*

[MP] DESIGN PROFESSIONAL. See "Registered design professional."

[MP] DIAMETER. Unless specifically stated, the term "diameter" is the nominal diameter as designated by the approved material standard.

[RB] DIAPHRAGM. A horizontal or nearly horizontal system acting to transmit lateral forces to the vertical resisting elements. Where the term "diaphragm" is used, it includes horizontal bracing systems.

[RB] DRAFT STOP. A material, device or construction installed to restrict the movement of air within open spaces of concealed areas of building components such as crawl spaces, floor-ceiling assemblies, roof-ceiling assemblies and *attics.*

[MP] DUCT SYSTEM. *All ducts, duct fittings, plenums and fans when assembled to form a continuous passageway for the distribution of air.*

[RB] DWELLING. Any building that contains one or two dwelling units used, intended, or designed to be built, used, rented, leased, let or hired out to be occupied, or that are occupied for living purposes.

[RB] DWELLING UNIT. A single unit providing complete independent living facilities for one or more persons, including permanent provisions for living, sleeping, eating, cooking and sanitation.

[RB] EMERGENCY ESCAPE AND RESCUE OPENING. An operable exterior window, door or similar device that provides for a means of escape and access for rescue in the event of an emergency. (See also "Grade floor opening.")

ENFORCEMENT. *Notwithstanding other provisions of law, the applicable section of the Health and Safety Code, Section 17920, is repeated here for clarity:*

"Enforcement" means diligent effort to secure compliance, including review of plans and permit applications, response to complaints, citation of violations, and other legal process. Except as otherwise provided in this part, "enforcement" may, but need not, include inspections of existing buildings on which no complaint or permit application has been filed, and effort to secure compliance as to these existing buildings.

ENFORCEMENT AGENCY. *See "ENFORCING AGENCY."*

ENFORCING AGENCY. *The designated department or agency as specified by statute or regulation.*

[RB] ENGINEERED WOOD RIM BOARD. A full-depth structural composite lumber, wood structural panel, structural glued laminated timber or prefabricated wood I-joist member designed to transfer horizontal (shear) and vertical (compression) loads, provide attachment for diaphragm sheathing, siding and exterior deck ledgers and provide lateral support at the ends of floor or roof joists or rafters.

[RB] ESCARPMENT. With respect to topographic wind effects, a cliff or steep slope generally separating two levels or gently sloping areas.

[RB] EXPANSIVE SOILS. Soils that exhibit volumetric increase or decrease (swelling or shrinking) in response to partial or full wetting or drying under load.

[RB] EXTERIOR INSULATION AND FINISH SYSTEMS (EIFS). EIFS are nonstructural, nonload-bearing exterior wall cladding systems that consist of an insulation board attached either adhesively or mechanically, or both, to the substrate; an integrally reinforced base coat; and a textured protective finish coat.

[RB] EXTERIOR INSULATION AND FINISH SYSTEMS (EIFS) WITH DRAINAGE. An EIFS that incorporates a means of drainage applied over a water-resistive barrier.

[RB] EXTERIOR WALL COVERING. A material or assembly of materials applied on the exterior side of exterior walls for the purpose of providing a weather-resistive barrier, insulation or for aesthetics, including but not limited to, veneers, siding, exterior insulation and finish systems, architectural trim and embellishments such as cornices, soffits, and fascias.

[RB] FACING. The wood structural panel facings that form the two outmost rigid layers of the structural insulated panel.

[MP] FACTORY-BUILT CHIMNEY. A listed and labeled chimney composed of factory-made components assembled in the field in accordance with the manufacturer's instructions and the conditions of the listing.

FAMILY. (HCD 1) *An individual or two or more persons who are related by blood or marriage; or otherwise live together in a dwelling unit.*

[RE] FENESTRATION. *See "Fenestration Product" as defined in the California Energy Code.*

[RB] FIBER-CEMENT (BACKERBOARD, SIDING, SOFFIT, TRIM AND UNDERLAYMENT) PRODUCTS. Manufactured thin section composites of hydraulic cementitious matrices and discrete nonasbestos fibers.

[RB] FIRE SEPARATION DISTANCE. The distance measured from the building face to one of the following:

1. To the closest interior lot line.
2. To the centerline of a street, an alley or public way.
3. To an imaginary line between two buildings on the lot.

The distance shall be measured at a right angle from the face of the wall.

[RB] FIREBLOCKING. Building materials or materials approved for use as fireblocking, installed to resist the free passage of flame to other areas of the building through concealed spaces.

[RB] FIREPLACE. An assembly consisting of a hearth and fire chamber of noncombustible material and provided with a chimney, for use with solid fuels.

Factory-built fireplace. A listed and labeled fireplace and chimney system composed of factory-made components, and assembled in the field in accordance with manufacturer's instructions and the conditions of the listing.

Masonry fireplace. A field-constructed fireplace composed of solid masonry units, bricks, stones or concrete.

[MP] FIREPLACE STOVE. A free-standing, chimney-connected solid-fuel-burning heater designed to be operated with the fire chamber doors in either the open or closed position.

[RB] FIREPLACE THROAT. The opening between the top of the firebox and the smoke chamber.

[RB] FIRE-RETARDANT-TREATED WOOD. Pressure-treated lumber and plywood that exhibit reduced surface burning characteristics and resist propagation of fire.

Other means during manufacture. A process where the wood raw material is treated with a fire-retardant formulation while undergoing creation as a finished product.

Pressure process. A process for treating wood using an initial vacuum followed by the introduction of pressure above atmospheric.

[RB] FLAME SPREAD. The propagation of flame over a surface.

[RB] FLAME SPREAD INDEX. A comparative measure, expressed as a dimensionless number, derived from visual measurements of the spread of flame versus time for a material tested in accordance with ASTM E84 or UL 723.

[RB] FLIGHT. A continuous run of rectangular treads or winders or combination thereof from one landing to another.

[RB] FOAM BACKER BOARD. Foam plastic used in siding applications where the foam plastic is a component of the siding.

[RB] FOAM PLASTIC INSULATION. A plastic that is intentionally expanded by the use of a foaming agent to produce a reduced-density plastic containing voids consisting of open or closed cells distributed throughout the plastic for thermal insulating or acoustic purposes and that has a density less than 20 pounds per cubic foot (320 kg/m^3) unless it is used as interior trim.

[RB] FOAM PLASTIC INTERIOR TRIM. Exposed foam plastic used as picture molds, chair rails, crown moldings, baseboards, handrails, ceiling beams, door trim and window trim and similar decorative or protective materials used in fixed applications.

FULL-TIME CARE *shall mean the establishment and routine care of persons on an hourly, daily, weekly, monthly, yearly or permanent basis, whether for 24-hours per day or less, and where sleeping accommodations are provided.*

[RB] GLAZING AREA. The interior surface area of all glazed fenestration, including the area of sash, curbing or other framing elements, that enclose conditioned space. Includes the area of glazed fenestration assemblies in walls bounding conditioned basements.

[RB] GRADE. The finished ground level adjoining the building at all exterior walls.

[RB] GRADE FLOOR OPENING. A window or other opening located such that the sill height of the opening is not more than 44 inches (1118 mm) above or below the finished ground level adjacent to the opening. (See also "Emergency escape and rescue opening.")

[RB] GRADE PLANE. A reference plane representing the average of the finished ground level adjoining the building at all exterior walls. Where the finished ground level slopes away from the exterior walls, the reference plane shall be established by the lowest points within the area between the building and the lot line or, where the lot line is more than 6 feet (1829 mm) from the building between the structure and a point 6 feet (1829 mm) from the building.

[RB] GROSS AREA OF EXTERIOR WALLS. The normal projection of all exterior walls, including the area of all windows and doors installed therein.

[RB] GUARD *OR GUARDRAIL.* A building component or a system of building components located near the open sides of elevated walking surfaces that minimizes the possibility of a fall from the walking surface to the lower level.

[RB] GUESTROOM. Any room or rooms used or intended to be used by one or more guests for living or sleeping purposes.

[RB] GYPSUM BOARD. The generic name for a family of sheet products consisting of a noncombustible core primarily of gypsum with paper surfacing. Gypsum wallboard, gypsum sheathing, gypsum base for gypsum veneer plaster, exterior gypsum soffit board, predecorated gypsum board and water-resistant gypsum backing board complying with the standards listed in Section R702.3 and Part IX of this code are types of gypsum board.

[RB] GYPSUM PANEL PRODUCT. The general name for a family of sheet products consisting essentially of gypsum.

[RB] HABITABLE SPACE. A space in a building for living, sleeping, eating or cooking. Bathrooms, toilet rooms, closets, halls, storage or utility spaces and similar areas are not considered habitable spaces.

[RB] HANDRAIL. A horizontal or sloping rail intended for grasping by the hand for guidance or support.

[MP] HANGERS. See "Supports."

[RB] HEIGHT, BUILDING. The vertical distance from grade plane to the average height of the highest roof surface.

[RB] HEIGHT, STORY. The vertical distance from top to top of two successive tiers of beams or finished floor surfaces; and, for the topmost story, from the top of the floor finish to the top of the ceiling joists or, where there is not a ceiling, to the top of the roof rafters.

[RB] HILL. With respect to topographic wind effects, a land surface characterized by strong relief in any horizontal direction.

[RB] HURRICANE-PRONE REGIONS. Areas vulnerable to hurricanes, defined as the U.S. Atlantic Ocean and Gulf of Mexico coasts where the ultimate design wind speed, V_{ult}, is greater than 115 miles per hour (51 m/s), and Hawaii, Puerto Rico, Guam, Virgin Islands and America Samoa.

[RB] IMPACT PROTECTIVE SYSTEM. Construction that has been shown by testing to withstand the impact of test missiles and that is applied, attached, or locked over exterior glazing.

INFANT, *for the purpose of these regulations, shall mean any child who because of age only, is unable to walk and requires the aid of another person to evacuate the building. In no case shall the term "infant" mean a child 2 years of age or older.*

[RB] INSULATED VINYL SIDING. A vinyl cladding product, with manufacturer-installed foam plastic insulating material as an integral part of the cladding product, having a thermal resistance of not less than R-2.

[RB] INSULATING CONCRETE FORM (ICF). A concrete forming system using stay-in-place forms of rigid foam plastic insulation, a hybrid of cement and foam insulation, a hybrid of cement and wood chips, or other insulating material for constructing cast-in-place concrete walls.

[RB] INSULATING SHEATHING. An insulating board having a thermal resistance of not less than R-2 of the core material.

[RB] JURISDICTION. The governmental unit that has adopted this code.

[RB] KITCHEN. Kitchen shall mean an area used, or designated to be used, for the preparation of food.

[RB] LABEL. An identification applied on a product by the manufacturer that contains the name of the manufacturer, the function and performance characteristics of the product or material, and the name and identification of an approved agency and that indicates that the representative sample of the product or material has been tested and evaluated by an approved agency. (See also "Manufacturer's designation" and "Mark.")

[RB] LABELED. Equipment, materials or products to which have been affixed a label, seal, symbol or other identifying mark of a nationally recognized testing laboratory, approved agency or other organization concerned with product evaluation that maintains periodic inspection of the production of such labeled items and whose labeling indicates either that the equipment, material or product meets identified standards or has been tested and found suitable for a specified purpose.

LABELED. (HCD 1) *Labeled means equipment or materials to which has been attached a label, symbol or other identifying mark of an organization, approved by the Department, that maintains a periodic inspection program of production of labeled products, installations, equipment or materials and by whose labeling the manufacturer indicates compliance with appropriate standards or performance in a specified manner.*

[RB] LIGHT-FRAME CONSTRUCTION. Construction whose vertical and horizontal structural elements are primarily formed by a system of repetitive wood or cold-formed steel framing members.

LIMITED-DENSITY OWNER-BUILT RURAL DWELLINGS. *Any structure consisting of one or more habitable rooms intended or designed to be occupied by one family with facilities for living or sleeping, with use restricted to rural areas designated by local jurisdiction. Notwithstanding other sections of law, the applicable section of Health and Safety Code Section 17958.2 is repeated here for clarification purposes.*

Section 17958.2. *(a) Notwithstanding Section 17958, regulations of the department adopted for limited-density owner-built rural dwellings, which are codified in Article 8 (commencing with Section 74) of Subchapter 1 of Chapter 1 of Title 25 of the California Code of Regulations, shall not become operative within any city or county unless and until the governing body of the city or county makes an express finding that the application of those regulations within the city or county is reasonably necessary because of local conditions and the city or county files a copy of that finding with the department.*

(b) In adopting ordinances or regulations for limited-density owner-built rural dwellings, a city or county may make such changes or modifications in the requirements contained in Article 8 (commencing with Section 74) of Subchapter 1 of Chapter 1 of Title 25 of the California Code of Regulations that it determines are reasonably necessary because of local conditions, if the city or county files a copy of the changes or modifications and the express findings for the changes or modifications with the department. No change or modification of that type shall become effective or operative for any purpose until the finding and the change or modification has been filed with the department.

LISTED. (HCD 1) *All products that appear in a list published by an approved testing or listing agency. For additional information, see Health and Safety Code Section 17920(h).*

[RB] LISTED. ***(SFM)*** Equipment, materials, products or services included in a list published by an organization acceptable to the code official and concerned with evaluation

of products or services that maintains periodic inspection of production of listed equipment or materials or periodic evaluation of services and whose listing states either that the equipment, material, product or service meets identified standards or has been tested and found suitable for a specified purpose. *For applications listed in Section 1.11 regulated by the Office of the State Fire Marshal, "listed" shall also mean equipment or materials accepted by the state fire marshal as conforming to the provisions of the State Fire Marshal's regulations and which are included in a list published by the State Fire Marshal.*

LISTING AGENCY. (HCD 1 & HCD 2) *An agency approved by the department that is in the business of listing and labeling products, materials, equipment and installations tested by an approved testing agency, and that maintains a periodic inspection program on current production of listed products, equipment and installations, and that, at least annually, makes available a published report of these listings. For additional information, see Health and Safety Code Section 17920(i).*

[RB] LIVE LOADS. Those loads produced by the use and occupancy of the building or other structure and do not include construction or environmental loads such as wind load, snow load, rain load, earthquake load, flood load or dead load.

LIVE/WORK UNIT. *A dwelling unit or sleeping unit in which a significant portion of the space includes a nonresidential use that is operated by the tenant or building owner.*

[MP] LIVING SPACE. Space within a dwelling unit utilized for living, sleeping, eating, cooking, bathing, washing and sanitation purposes.

[MP] LOCAL EXHAUST. An exhaust system that uses one or more fans to exhaust air from a specific room or rooms within a dwelling.

[RB] LODGING HOUSE. *(HCD 1) Any building or portion thereof containing not more than five guest rooms where rent is paid in money, goods, labor or otherwise, and that is occupied by the proprietor as the residence of such proprietor.*

[RB] LOT. A portion or parcel of land considered as a unit.

[RB] LOT LINE. A line dividing one lot from another, or from a street or any public place.

[RB] MANUFACTURER'S DESIGNATION. An identification applied on a product by the manufacturer indicating that a product or material complies with a specified standard or set of rules. (See also "Mark" and "Label.")

[RB] MANUFACTURER'S INSTALLATION INSTRUCTIONS. Printed instructions included with equipment as part of the conditions of their listing and labeling.

[RB] MARK. An identification applied on a product by the manufacturer indicating the name of the manufacturer and the function of a product or material. (See also "Manufacturer's designation" and "Label.")

[RB] MASONRY, SOLID. Masonry consisting of solid masonry units laid contiguously with the joints between the units filled with mortar.

[RB] MASONRY CHIMNEY. A field-constructed chimney composed of solid masonry units, bricks, stones or concrete.

[RB] MASONRY HEATER. A masonry heater is a solid fuel burning heating appliance constructed predominantly of concrete or solid masonry having a mass of not less than 1,100 pounds (500 kg), excluding the chimney and foundation. It is designed to absorb and store a substantial portion of heat from a fire built in the firebox by routing exhaust gases through internal heat exchange channels in which the flow path downstream of the firebox includes not less than one 180-degree (3.14-rad) change in flow direction before entering the chimney and that deliver heat by radiation through the masonry surface of the heater.

[RB] MASONRY UNIT. Brick, tile, stone, architectural cast stone, glass block or concrete block conforming to the requirements specified in Section 2103 of the *California Building Code.*

Clay. A building unit larger in size than a brick, composed of burned clay, shale, fire clay or mixtures thereof.

Concrete. A building unit or block larger in size than 12 inches by 4 inches by 4 inches (305 mm by 102 mm by 102 mm) made of cement and suitable aggregates.

Glass. Nonload-bearing masonry composed of glass units bonded by mortar.

Hollow. A masonry unit with a net cross-sectional area in any plane parallel to the loadbearing surface that is less than 75 percent of its gross cross-sectional area measured in the same plane.

Solid. A masonry unit with a net cross-sectional area in every plane parallel to the loadbearing surface that is 75 percent or more of its cross-sectional area measured in the same plane.

[RB] MEAN ROOF HEIGHT. The average of the roof eave height and the height to the highest point on the roof surface, except that eave height shall be used for roof angle of less than or equal to 10 degrees (0.18 rad).

[RB] METAL ROOF PANEL. An interlocking metal sheet having an installed weather exposure of not less than 3 square feet (0.28 m^2) per sheet.

[RB] METAL ROOF SHINGLE. An interlocking metal sheet having an installed weather exposure less than 3 square feet (0.28 m^2) per sheet.

[RB] MEZZANINE. An intermediate level or levels between the floor and ceiling of any story.

MEZZANINE, LOFT. *An intermediate level or levels between the floor and ceiling of any story with an aggregate floor area of not more than one-third of the area of the room or space in which the level or levels are located.*

[RB] MODIFIED BITUMEN ROOF COVERING. One or more layers of polymer modified asphalt sheets. The sheet materials shall be fully adhered or mechanically attached to the substrate or held in place with an approved ballast layer.

[RB] MULTIPLE-STATION SMOKE ALARM. Two or more single-station alarm devices that are capable of inter-

connection such that actuation of one causes all integral or separate audible alarms to operate.

[RB] NAILABLE SUBSTRATE. A product or material such as framing, sheathing or furring, composed of wood or wood-based materials, or other materials and fasteners providing equivalent fastener withdrawal resistance.

[RB] NATURALLY DURABLE WOOD. The heartwood of the following species with the exception that an occasional piece with corner sapwood is permitted if 90 percent or more of the width of each side on which it occurs is heartwood.

Decay resistant. Redwood, cedar, black locust and black walnut.

Termite resistant. Alaska yellow cedar, redwood, Eastern red cedar and Western red cedar including all sapwood of Western red cedar.

NONAMBULATORY PERSONS *are persons unable to leave a building unassisted under emergency conditions. It includes, but is not limited to, persons who depend on mechanical aids such as crutches, walkers and wheelchairs and any person who is unable to physically and mentally respond to a sensory signal approved by the state fire marshal or an oral instruction relating to fire danger.*

The determination of ambulatory or nonambulatory status of persons with developmental disabilities shall be made by the Director of Social Services or his or her designated representative, in consultation with the director of Developmental Services or his or her designated representative. The determination of ambulatory or nonambulatory status of all other disabled persons placed after January 1, 1984, who are not developmentally disabled shall be made by the Director of Social Services or his or her designated representative.

[RB] NONCOMBUSTIBLE MATERIAL. *Noncombustible as applied to building construction material means a material which, in the form in which it is used, is either one of the following:*

1. *Material of which no part will ignite and burn when subjected to fire. Any material passing ASTM E136 shall be considered noncombustible.*
2. *Material having a structural base of noncombustible material as defined in Item 1 above, with a surfacing material not over $^1/_8$ inch (3.2 mm) thick which has a flame-spread index of 50 or less.*

"Noncombustible" does not apply to surface finish materials. Material required to be noncombustible for reduced clearances to flues, heating appliances or other sources of high temperature shall refer to material conforming to Item 1. No material shall be classed as noncombustible which is subject to increase in combustibility or flame-spread index, beyond the limits herein established, through the effects of age, moisture or other atmospheric condition.

[RB] NOSING. The leading edge of treads of stairs and of landings at the top of stairway flights.

[RB] OCCUPIED SPACE. The total area of all buildings or structures on any lot or parcel of ground projected on a horizontal plane, excluding permitted projections as allowed by this code.

[RB] OWNER. Any person, agent, firm or corporation having a legal or equitable interest in the property.

[RB] PAN FLASHING. Corrosion-resistant flashing at the base of an opening that is integrated into the building exterior wall to direct water to the exterior and is premanufactured, fabricated, formed or applied at the job site.

[RB] PANEL THICKNESS. Thickness of core plus two layers of structural wood panel facings.

PASSIVE SOLAR ENERGY COLLECTOR. *Uses architectural components, rather than mechanical components, to provide heating or cooling for a building interior.*

[MP] PELLET FUEL-BURNING APPLIANCE. A closed combustion, vented appliance equipped with a fuel feed mechanism for burning processed pellets of solid fuel of a specified size and composition.

[MP] PELLET VENT. A vent listed and labeled for use with a listed pellet fuel-burning appliance.

[RB] PERFORMANCE CATEGORY. A designation of wood structural panels as related to the panel performance used in Chapters 4, 5, 6 and 8.

[RB] PERMIT. An official document or certificate issued by the building official that authorizes performance of a specified activity.

[RB] PERSON. An individual, heirs, executors, administrators or assigns, and a firm, partnership or corporation, its or their successors or assigns, or the agent of any of the aforesaid.

PERSONS WITH INTELLECTUAL DISABILITIES, PROFOUNDLY OR SEVERELY. *Shall mean any persons with intellectual disabilities who is unable to evacuate a building unassisted during emergency conditions.*

Note: *The determination as to such incapacity shall be made by the Director of the State Department of Public Health or his or her designated representative pursuant to Health and Safety Code Section 13131.3.*

[RB] PHOTOVOLTAIC MODULE. A complete, environmentally protected unit consisting of solar cells, optics and other components, exclusive of a tracker, designed to generate DC power where exposed to sunlight.

[RB] PHOTOVOLTAIC PANEL. A collection of photovoltaic modules mechanically fastened together, wired, and designed to provide a field-installable unit.

[RB] PHOTOVOLTAIC PANEL SYSTEM. A system that incorporates discrete photovoltaic panels that convert solar radiation into electricity, including rack support systems.

[RB] PHOTOVOLTAIC SHINGLES. A roof covering that resembles shingles and that incorporates photovoltaic modules.

[RB] PLASTIC COMPOSITE. A generic designation that refers to wood-plastic composites and plastic lumber.

[RB] PLATFORM CONSTRUCTION. A method of construction by which floor framing bears on load bearing walls that are not continuous through the story levels or floor framing.

[MP] PLENUM. A chamber that forms part of an air-circulation system other than the occupied space being conditioned.

[RB] POLYPROPYLENE SIDING. A shaped material, made principally from polypropylene homopolymer, or copolymer, that in some cases contains fillers or reinforcements, that is used to clad exterior walls or buildings.

[RB] POSITIVE ROOF DRAINAGE. The drainage condition in which consideration has been made for the loading deflections of the roof deck, and additional slope has been provided to ensure drainage of the roof within 48 hours of precipitation.

[RB] PRECAST CONCRETE. A structural concrete element cast elsewhere than its final position in the structure.

[RB] PRECAST CONCRETE FOUNDATION WALLS. Preengineered, precast concrete wall panels that are designed to withstand specified stresses and used to build below-grade foundations.

PROTECTIVE SOCIAL CARE FACILITY. *A facility housing persons, who are referred, placed or caused to be placed in the facility, by any governmental agency and for whom the services, or a portion thereof, are paid for by any governmental agency. These occupancies shall include, but are not limited to, those commonly referred to as "assisted living facilities," "social rehabilitation facilities," "certified family care homes," "out-of-home placement facilities" and "halfway houses."*

[RB] PUBLIC WAY. Any street, alley or other parcel of land open to the outside air leading to a public street, that has been deeded, dedicated or otherwise permanently appropriated to the public for public use and that has a clear width and height of not less than 10 feet (3048 mm).

[RB] RAMP. A walking surface that has a running slope steeper than 1 unit vertical in 20 units horizontal (5-percent slope).

[RB] READY ACCESS (TO). That which enables a device, appliance or equipment to be directly reached, without requiring the removal or movement of any panel, door or similar obstruction.

[RB] REGISTERED DESIGN PROFESSIONAL. An individual who is registered or licensed to practice their respective design profession as defined by the statutory requirements of the professional registration laws of the state or jurisdiction in which the project is to be constructed.

[RB] REPAIR. The reconstruction, replacement or renewal of any part of an existing building for the purpose of its maintenance or to correct damage.

[RB] REROOFING. The process of recovering or replacing an existing roof covering. See "Roof recover."

RESIDENTIAL CARE FACILITY FOR THE CHRONICALLY ILL (RCF/CI), *as termed, means a housing arrangement with a maximum capacity of 25 residents that provides a range of services to residents who have chronic, life-threatening illnesses.*

RESIDENTIAL CARE FACILITY FOR THE ELDERLY (RCFE), *as defined in Health and Safety Code Section 1569.2, shall mean a facility with a housing arrangement chosen voluntarily by persons 60 years of age or over, or their authorized representative, where varying levels and intensities of care and supervision, protective supervision or personal care are provided, based on their varying needs, as determined in order to be admitted and to remain in the facility. Persons under 60 years of age with compatible needs, as determined by the Department of Social Services in regulations, may be allowed to be admitted or retained in a residential-care facility for the elderly. Pursuant to Health and Safety Code Section 13133, regulations of the State Fire Marshal pertaining to Group R, Division 2 Occupancies classified as Residential Facilities (RF) and Residential-care Facilities for the Elderly (RCFE) shall apply uniformly throughout the state and no city, county, city and county, including a charter city or charter county, or fire protection district shall adopt or enforce any ordinance or local rule or regulation relating to fire and panic safety which is in consistent with these regulations. A city, county, city and county, including a charter city or charter county may pursuant to Health and Safety Code Section 13143.5, or a fire protection district may pursuant to Health and Safety Code Section 13869.7, adopt standards more stringent than those adopted by the State Fire Marshal that are reasonably necessary to accommodate local climate, geological or topographical conditions relating to roof coverings for Residential-care Facilities for the Elderly.*

RESIDENTIAL FACILITY (RF), *as defined in Section 1502 of the Health and Safety Code, shall mean any family home, group care facility or similar facility determined by the director of Social Services, for 24-hour nonmedical care of persons in need of personal services, supervision, or assistance essential for sustaining the activities of daily living or for the protection of the individual. Such facilities include small family homes and social rehabilitation facilities. Pursuant to Health and Safety Code Section 13133, regulations of the State Fire Marshal pertaining to Group R Occupancies classified as Residential Facilities (RF) and Residential-care Facilities for the Elderly (RCFE) shall apply uniformly throughout the state and no city, county, city and county, including a charter city or charter county, or fire protection district shall adopt or enforce any ordinance or local rule or regulation relating to fire and panic safety which is in consistent with these regulations. A city, county, city and county, including a charter city or charter county may pursuant to Health and Safety Code Section 13143.5, or a fire protection district may pursuant to Health and Safety Code Section 13869.7, adopt standards more stringent than those adopted by the State Fire Marshal that are reasonably necessary to accommodate local climate, geological or topographical conditions relating to roof coverings for Residential-care Facilities for the Elderly.*

RESTRAINT. *The physical retention of a person within a room, cell or cell block by any means, or within the exterior walls of a building by means of locked doors inoperable by the person restrained. Restraint shall also mean the physical binding, strapping or similar restriction of any person in a chair, walker, bed or other contrivance for the purpose of deliberately restricting the free movement of ambulatory persons. Restraint shall not be construed to include nonambulatory persons nor shall it include the use of bandage material, strip sheeting or other fabrics or materials (soft ties) used to restrain persons in hospital-type beds or wheelchairs to prevent injury, provided an approved method of quick release is maintained. Facilities employing the use of soft ties, however, shall be classified as a building used to house nonambulatory persons. Restraint shall not be practiced in licensed facilities classified as Group R-3.1 and R-4 occupancies unless constructed as a Group I-3 occupancy. For Group I-3 Occupancies see Section 308.5 of the California Building Code.*

[RB] RIDGE. With respect to topographic wind effects, an elongated crest of a hill characterized by strong relief in two directions.

[RB] RISER (STAIR). The vertical component of a step or stair.

[RB] ROOF ASSEMBLY. A system designed to provide weather protection and resistance to design loads. The system consists of a roof covering and roof deck or a single component serving as both the roof covering and the roof deck. A roof assembly includes the roof deck, underlayment and roof covering, and can also include a thermal barrier, ignition barrier, insulation or a vapor retarder.

[RB] ROOF COATING. A fluid-applied, adhered coating used for roof maintenance or roof repair, or as a component of a roof covering system or roof assembly.

[RB] ROOF COVERING. The covering applied to the roof deck for weather resistance, fire classification or appearance.

[RB] ROOF COVERING SYSTEM. See "Roof assembly."

[RB] ROOF DECK. The flat or sloped surface not including its supporting members or vertical supports.

[RB] ROOF RECOVER. The process of installing an additional roof covering over a prepared existing roof covering without removing the existing roof covering.

[RB] ROOF REPAIR. Reconstruction or renewal of any part of an existing roof for the purposes of its maintenance.

[RB] ROOF REPLACEMENT. The process of removing the existing roof covering, repairing any damaged substrate and installing a new roof covering.

[RB] RUNNING BOND. The placement of masonry units such that head joints in successive courses are horizontally offset not less than one-quarter the unit length.

[RB] SCUPPER. An opening in a wall or parapet that allows water to drain from a roof.

[RB] SEISMIC DESIGN CATEGORY (SDC). A classification assigned to a structure based on its occupancy category and the severity of the design earthquake ground motion at the site.

[RB] SHALL. The term, where used in the code, is construed as mandatory.

[RB] SHEAR WALL. A general term for walls that are designed and constructed to resist racking from seismic and wind by use of masonry, concrete, cold-formed steel or wood framing in accordance with Chapter 6 of this code and the associated limitations in Section R301.2 of this code.

[RB] SHINGLE FASHION. A method of installing roof or wall coverings, water-resistive barriers, flashing or other building components such that upper layers of material are placed overlapping lower layers of material to provide drainage and protect against water intrusion at unsealed penetrations and joints or in combination with sealed joints.

[RB] SINGLE-PLY MEMBRANE. A roofing membrane that is field applied using one layer of membrane material (either homogeneous or composite) rather than multiple layers.

[RB] SINGLE-STATION SMOKE ALARM. An assembly incorporating the detector, control equipment and alarm sounding device in one unit that is operated from a power supply either in the unit or obtained at the point of installation.

[RB] SMOKE-DEVELOPED INDEX. A comparative measure, expressed as a dimensionless number, derived from measurements of smoke obscuration versus time for a material tested in accordance with ASTM E84 or UL 723.

[RB] SOLAR ENERGY SYSTEM. A system that converts solar radiation to usable energy, including photovoltaic panel systems and solar thermal systems.

[MP] SOLAR THERMAL COLLECTOR. Components in a solar thermal system that collect and convert solar radiation to thermal energy.

[MP] SOLAR THERMAL SYSTEM. A system that converts solar radiation to thermal energy for use in heating or cooling.

[RB] SOLID MASONRY. Load-bearing or nonload-bearing construction using masonry units where the net cross-sectional area of each unit in any plane parallel to the bearing surface is not less than 75 percent of its gross cross-sectional area. Solid masonry units shall conform to ASTM C55, C62, C73, C145 or C216.

[RB] SPLINE. A strip of wood structural panel cut from the same material used for the panel facings, used to connect two structural insulated panels. The strip (spline) fits into a groove cut into the vertical edges of the two structural insulated panels to be joined. Splines are used behind each facing of the structural insulated panels being connected as shown in Figure R610.8.

[RB] STACK BOND. The placement of masonry units in a bond pattern is such that head joints in successive courses are vertically aligned. For the purpose of this code, requirements for stack bond shall apply to all masonry laid in other than running bond.

[RB] STAIR. A change in elevation, consisting of one or more risers.

[RB] STAIRWAY. One or more flights of stairs, either interior or exterior, with the necessary landings and connecting platforms to form a continuous and uninterrupted passage from one level to another within or attached to a building, porch or deck.

[RB] STAIRWAY, SPIRAL. A stairway with a plan view of closed circular form and uniform section-shaped treads radiating from a minimum-diamcter circle.

STATE-OWNED/LEASED BUILDING. *A building or portion of a building that is owned, leased or rented by the state. State-leased buildings shall include all required exits to a public way serving such leased area or space. Portions of state-leased buildings that are not leased or rented by the state shall not be included within the scope of this section unless such portions present an exposure hazard to the state-leased area or space.*

[RB] STORY. That portion of a building included between the upper surface of a floor and the upper surface of the floor or roof next above.

[RB] STORY ABOVE GRADE PLANE. Any story having its finished floor surface entirely above grade plane, or in which the finished surface of the floor next above is either of thc following:

1. More than 6 feet (1829 mm) above grade plane.
2. Morc than 12 feet (3658 mm) above the finished ground level at any point.

[RB] STRUCTURAL COMPOSITE LUMBER. Structural mcmbers manufactured using wood elements bonded together with exterior adhesivcs.

Examples of structural composite lumber are:

Laminated strand lumber (LSL). A composite of wood strand elements with wood fibers primarily oriented along the length of the member, where the least dimension of the wood strand elements is 0.10 inch (2.54 mm) or less and their average lengths are not less than 150 times the least dimension of the wood strand elements.

Laminated veneer lumber (LVL). A composite of wood veneer elements with wood fibers primarily oriented along the length of the member, where the veneer element thicknesses are 0.25 inch (6.4 mm) or less.

Oriented strand lumber (OSL). A composite of wood strand elements with wood fibers primarily oriented along the length of the member, where the least dimension of the wood strand elements is 0.10 inch (2.54 mm) or less and their average lengths arc not less than 75 times and less than 150 times thc least dimension of the wood strand elements.

Parallel strand lumber (PSL). A composite of wood strand elements with wood fibers primarily oriented along the length of the member, where the least dimension of the wood strand elemcnts is 0.25 inch (6.4 mm) or less and their average lengths are not less than 300 times the least dimension of the wood strand elemcnts.

[RB] STRUCTURAL INSULATED PANEL (SIP). A structural sandwich panel that consists of a lightweight foam plastie core securely laminated between two thin, rigid wood structural panel facings.

[RB] STRUCTURE. That which is built or constructed.

[RB] SUNROOM. A one-story structure attaehed to a dwelling with a glazing area in excess of 40 percent of the gross area of the structure's exterior walls and roof.

[MP] SUPPORTS. Devices for supporting, hanging and securing pipes, fixtures and equipment.

TERMINALLY ILL, *as termed for an individual, means the individual has a life expectancy of six months or less as stated in writing by his or her attending physician and surgeon.*

[RB] TERMITE-RESISTANT MATERIAL. Pressure-preservative-treated wood in accordance with the AWPA standards in Section R317.1, naturally durable termite-resistant wood, steel, concrete, masonry or other approved material.

TESTING AGENCY. *An agency approved by the department as qualified and equipped for testing of products, materials, equipment and installations in accordance with nationally recognized standards. For additional information, see Health and Safety Code Section 17920(m).*

[RB] TOWNHOUSE. A single-family dwelling unit constructed in a group of three or more attached units in which each unit extends from foundation to roof and with a yard or public way on not less than two sides.

[RB] TRIM. Picture molds, chair rails, baseboards, handrails, door and window frames, and similar decorative or protective materials used in fixed applications.

[RB] TRUSS DESIGN DRAWING. The graphic depiction of an individual truss, that describes the design and physical characteristics of the truss.

[RB] TUBULAR DAYLIGHTING DEVICE (TDD). A nonoperable fenestration unit primarily designed to transmit daylight from a roof surface to an interior ceiling via a tubular conduit. The basic unit consists of an extcrior glazed weathering surface, a light-transmitting tube with a reflective interior surface, and an interior-sealing device such as a translucent ceiling panel. The unit may be factory assembled, or field assembled from a manufactured kit.

[MP] TYPE L VENT. A listed and labeled vent conforming to UL 641 for venting oil-burning appliances listed for use with Type L vents or with gas appliances listed for use with Type B vents.

[RB] UNDERLAYMENT. One or more layers of felt, sheathing paper, nonbituminous saturated felt, or other approved material over which a roof covering, with a slope of 2 to 12 (17-percent slope) or greater, is applied.

[RB] VAPOR DIFFUSION PORT. A passageway for conveying water vapor from an unvented attic to the outside atmosphere.

[RB] VAPOR PERMEABLE. The property of having a moisture vapor permeance rating of 5 perms (2.9×10^{-10} kg/Pa • s • m^2) or greater, where tested in aecordance with the

desiccant method using Procedure A of ASTM E96. A vapor permeable material permits the passage of moisture vapor.

[RB] VAPOR RETARDER CLASS. A measure of the ability of a material or assembly to limit the amount of moisture that passes through that material or assembly. Vapor retarder class shall be defined using the desiccant method with Procedure A of ASTM E96 as follows:

Class I: ≤ 0.1 perm rating

Class II: > 0.1 to ≤ 1.0 perm rating

Class III: > 1.0 to ≤ 10 perm rating

[MP] VENT. A passageway for conveying flue gases from fuel-fired appliances, or their vent connectors, to the outside atmosphere.

[RB] VENTILATION. The natural or mechanical process of supplying conditioned or unconditioned air to, or removing such air from, any space.

[MP] VENTING. Removal of combustion products to the outdoors.

[RB] VINYL SIDING. A shaped material, made principally from rigid polyvinyl chloride (PVC), that is used to cover exterior walls of buildings.

[RB] WALL, RETAINING. A wall not laterally supported at the top, that resists lateral soil load and other imposed loads.

[RB] WALLS. Walls shall be defined as follows:

Load-bearing wall. A wall supporting any vertical load in addition to its own weight.

Nonbearing wall. A wall which does not support vertical loads other than its own weight.

[RB] WATER-RESISTIVE BARRIER. A material behind an exterior wall covering that is intended to resist liquid water that has penetrated behind the exterior covering from further intruding into the exterior wall assembly.

[RB] WINDER. A tread with nonparallel edges.

[RB] WOOD STRUCTURAL PANEL. A panel manufactured from veneers; or wood strands or wafers; bonded together with waterproof synthetic resins or other suitable bonding systems. Examples of wood structural panels are plywood, orientated strand board (OSB) or composite panels.

[RB] YARD. An open space, other than a court, unobstructed from the ground to the sky, except where specifically provided by this code, on the lot on which a building is situated.

CALIFORNIA RESIDENTIAL CODE – MATRIX ADOPTION TABLE
CHAPTER 3 – BUILDING PLANNING

(Matrix Adoption Tables are nonregulatory, intended only as an aid to the code user. See Chapter 1 for state agency authority and building applications.)

Adopting agency	BSC	BSC-CG	SFM	HCD			DSA			OSHPD						BSCC	DPH	AGR	DWR	CEC	CA	SL	SLC
				1	2	1/AC	AC	SS	SS/CC	1	1R	2	3	4	5								
Adopt entire chapter																							
Adopt entire chapter as amended (amended sections listed below)				X																			
Adopt only those sections that are listed below			X																				
Chapter / Section																							
R300				X																			
R300.1				X																			
R300.2				X																			
R301.1			X																				
R301.1.1.1				X																			
R301.1.3.1				X																			
R301.1.3.2				X																			
R301.1.3.3				X																			
Table R301.2(1)				X																			
R301.2.2.1.1																							
R301.2.2.1.2																							
R301.2.2.10				X																			
Table 301.5				X																			
R302.1 - R302.14			X																				
R302.1			X	X																			
R302.2.2				X																			
R302.5.1				X																			
R302.6				X																			
R302.14				X																			
R303.1				X																			
R303.3				X																			
R303.3.1				X																			
R303.4				X																			
R303.7 - R308.1			X																				
R303.9.1.1				X																			
R303.10				X																			
R304.2				X																			
R307.1				X																			
Figure R307.1				†																			
R308.3 - R308.4			X																				
R309.4				X																			
R309.5			X																				
R309.6			X																				
R309.7				X																			
R309.8				X																			
R310 - R310.4			X																				

(continued)

CALIFORNIA RESIDENTIAL CODE – MATRIX ADOPTION TABLE
CHAPTER 3 – BUILDING PLANNING—continued

Adopting agency	BSC	BSC-CG	SFM	HCD			DSA			OSHPD						BSCC	DPH	AGR	DWR	CEC	CA	SL	SLC
				1	2	1/AC	AC	SS	SS/CC	1	1R	2	3	4	5								
Adopt Entire Chapter																							
Adopt Entire Chapter as amended (amended sections listed below)				X																			
Adopt only those sections that are listed below			X																				
Chapter / Section																							
R310.2.2				X																			
R311 - R311.8.3.3			X																				
R312 - R312.2.2			X																				
R312.1.2				X																			
R313.1 - R313.2.1			X	◆																			
R314 - R314.8.3			X																				
R315.1.1				X																			
R315.2				X																			
R315.2.1				X																			
R315.2.2				X																			
R315.3				X																			
R315.4				X																			
R315.5				X																			
R315.6				X																			
R315.7.2				X																			
R315.7.4				X																			
R316			X																				
R316.2.1			X																				
R316.3 *Exception 2*			X																				
R317.1				X																			
R317.1.6				X																			
R319			X																				
R320.1				X																			
R320.1.1				†																			
R321			X																				
R321.3				X																			
R322.1.6				X																			
R322.1.7				X																			
R322.1.9				†																			
R322.2				X																			
R324			X																				
R324.2				X																			
R324.3				X																			
R324.6				X																			
R324.7.1				X																			
R326				†																			
R327.2				X																			
R327.4				X																			
R327.5				X																			
R334				X																			
R334.1				X																			
R335 - R335.9			X																				
R336 - R336.8			X																				
R337 - R337.10.4			X																				
R338 - R338.4			X																				
R340				X																			
R340.1				X																			

The state agency does not adopt sections identified with the following symbol: †

The ◆ designation indicates that the State Fire Marshal's adoption of this chapter or individual sections is applicable to structures subject to HCD 1.

Part III—Building Planning and Construction

CHAPTER 3

BUILDING PLANNING

User note:

About this chapter: *Chapter 3 contains a wide array of building planning requirements that are critical to designing a safe and usable building. This includes, but is not limited to, requirements related to: general structural design, fire-resistant construction, light, ventilation, sanitation, plumbing fixture clearances, minimum room area and ceiling height, safety glazing, means of egress, automatic fire sprinkler systems, smoke and carbon monoxide alarm systems, accessibility and solar energy systems.*

SECTION R300
SITE DRAINAGE

R300.1 Storm water drainage and retention during construction. *Projects which disturb less than one acre of soil and are not part of a larger common plan of development which in total disturbs one acre or more, shall manage storm water drainage during construction in accordance with the California Green Building Standards Code, Chapter 4, Division 4.1.*

R300.2 Grading and paving. *Construction plans shall indicate how the site grading or drainage system will manage all surface water flows to keep water from entering buildings in accordance with the California Green Building Standards Code, Chapter 4, Division 4.1.*

SECTION R301
DESIGN CRITERIA

R301.1 Application. Buildings and structures, and parts thereof, shall be constructed to safely support all loads, including dead loads, live loads, roof loads, flood loads, snow loads, wind loads and seismic loads as prescribed by this code. The construction of buildings and structures in accordance with the provisions of this code shall result in a system that provides a complete load path that meets the requirements for the transfer of loads from their point of origin through the load-resisting elements to the foundation. Buildings and structures constructed as prescribed by this code are deemed to comply with the requirements of this section.

Existing buildings housing existing protective social care homes or facilities established prior to 1972 (see Chapter 11 of the California Fire Code and the California Existing Building Code).

R301.1.1 Alternative provisions. As an alternative to the requirements in Section R301.1, the following standards are permitted subject to the limitations of this code and the limitations therein. Where engineered design is used in conjunction with these standards, the design shall comply with the *California Building Code*.

1. AWC *Wood Frame Construction Manual* (WFCM).
2. AISI *Standard for Cold-Formed Steel Framing—Prescriptive Method for One- and Two-Family Dwellings* (AISI S230).
3. ICC *Standard on the Design and Construction of Log Structures* (ICC 400).

R301.1.1.1 Alternative provisions for limited-density owner-built rural dwellings. *The purpose of this subsection is to permit alternatives that provide minimum protection of life, limb, health, property, safety and welfare of the general public and the owners and occupants of limited-density owner-built rural dwellings as defined in Chapter 2 of this code. For additional information see Chapter 1, Subchapter 1, Article 8, of Title 25, California Code of Regulations, commencing with Section 74.*

To meet compliance with the requirements of this code, provisions of Section R301.1.1.1, Items 1 though 5 may be utilized for limited-density owner-built rural dwellings when the materials, methods of construction, or appliances are determined appropriate or suitable for their intended purpose by the local enforcing agency.

1. *A limited-density owner-built rural dwelling may be of any type of construction which will provide for a sound structural condition. Structural hazards which result in an unsound condition and which may constitute a substandard building are delineated in Section 17920.3 of the Health and Safety Code.*
2. *There shall be no requirements for room dimensions as required in Chapter 3, provided there is adequate light and ventilation and means of egress.*
3. *There shall be no specified requirement for heating capacity or for temperature maintenance. The use of solid-fuel or solar heating devices shall be deemed as complying with the requirements of Chapter 3. If nonrenewable fuel is used in these dwellings, rooms so heated shall meet current installation standards.*

4. *Pier foundations, stone masonry footings and foundations, pressure-treated lumber, poles or equivalent foundation materials or designs may be used provided that bearing is sufficient.*
5. *Owner-produced or used materials and appliances may be utilized unless found not to be of sufficient strength or durability to perform the intended function. Owner-produced or used lumber, or shakes and shingles may be utilized unless found to contain dry rot, excessive splitting or other defects obviously rendering the material unfit in strength or durability for the intended purpose.*

R301.1.2 Construction systems. The requirements of this code are based on platform and balloon-frame construction for light-frame buildings. The requirements for concrete and masonry buildings are based on a balloon framing system. Other framing systems must have equivalent detailing to ensure force transfer, continuity and compatible deformations.

R301.1.3 Engineered design. Where a building of otherwise conventional construction contains structural elements exceeding the limits of Section R301 or otherwise not conforming to this code, these elements shall be designed in accordance with accepted engineering practice. The extent of such design need only demonstrate compliance of nonconventional elements with other applicable provisions and shall be compatible with the performance of the conventional framed system. Engineered design in accordance with the *California Building Code* is permitted for buildings and structures, and parts thereof, included in the scope of this code.

R301.1.3.1 California licensed architect or engineer. *When any portion of any structure deviates from substantial compliance with conventional framing requirements for woodframe construction found in this code, the building official shall require the construction documents to be approved and stamped by a California licensed architect or engineer for that irregular or nonconforming portion of work. Notwithstanding other sections of law, the law establishing these provisions is found in Business and Professions Code Sections 5537 and 6737.1.*

R301.1.3.2 Woodframe structures greater than two-stories. *The building official shall require construction documents to be approved and stamped by a California licensed architect or engineer for all dwellings of woodframe construction more than two stories and basement in height. Notwithstanding other sections of law, the law establishing these provisions is found in Business and Professions Code Sections 5537 and 6737.1.*

R301.1.3.3 Structures other than woodframe. *The building official shall require floor, wall or roof-ceiling structural elements in dwellings designed of cold-formed steel, concrete, masonry or structural insulated panels prescribed by this code to be approved and stamped by a California licensed architect or engineer. Notwithstanding other sections of law, the law establishing these provisions is found in Business and Professions Code Sections 5537 and 6737.1.*

R301.2 Climatic and geographic design criteria. Buildings shall be constructed in accordance with the provisions of this code as limited by the provisions of this section. Additional criteria shall be established by the local jurisdiction and set forth in Table R301.2(1).

R301.2.1 Wind design criteria. Buildings and portions thereof shall be constructed in accordance with the wind provisions of this code using the ultimate design wind speed in Table R301.2(1) as determined from Figure R301.2(5)A. The structural provisions of this code for wind loads are not permitted where wind design is required as specified in Section R301.2.1.1. Where different construction methods and structural materials are used for various portions of a building, the applicable requirements of this section for each portion shall apply. Where not otherwise specified, the wind loads listed in Table R301.2(2) adjusted for height and exposure using Table R301.2(3) shall be used to determine design load performance requirements for wall coverings, curtain walls, roof coverings, exterior windows, skylights, garage doors and exterior doors. Asphalt shingles shall be designed for wind speeds in accordance with Section R905.2.4. A continuous load path shall be provided to transmit the applicable uplift forces in Section R802.11.1 from the roof assembly to the foundation.

R301.2.1.1 Wind limitations and wind design required. The wind provisions of this code shall not apply to the design of buildings where wind design is required in accordance with Figure R301.2(5)B.

Exceptions:

1. For concrete construction, the wind provisions of this code shall apply in accordance with the limitations of Sections R404 and R608.
2. For structural insulated panels, the wind provisions of this code shall apply in accordance with the limitations of Section R610.
3. For cold-formed steel light-frame construction, the wind provisions of this code shall apply in accordance with the limitations of Sections R505, R603 and R804.

In regions where wind design is required in accordance with Figure R301.2(5)B, the design of buildings for wind loads shall be in accordance with one or more of the following methods:

1. AWC *Wood Frame Construction Manual* (WFCM).
2. ICC *Standard for Residential Construction in High-Wind Regions* (ICC 600).
3. ASCE *Minimum Design Loads for Buildings and Other Structures* (ASCE 7).
4. AISI *Standard for Cold-Formed Steel Framing—Prescriptive Method For One- and Two-Family Dwellings* (AISI S230).

5. *California Building Code.*

The elements of design not addressed by the methods in Items 1 through 5 shall be in accordance with the provisions of this code.

Where ASCE 7 or the *California Building Code* is used for the design of the building, the wind speed map and exposure category requirements as specified in ASCE 7 and the *California Building Code* shall be used.

R301.2.1.1.1 Sunrooms. Sunrooms shall comply with AAMA/NPEA/NSA 2100. For the purpose of applying the criteria of AAMA/NPEA/NSA 2100 based on the intended use, sunrooms shall be identified as one of the following categories by the permit applicant, design professional or the property owner or owner's agent in the construction documents. Component and cladding pressures shall be used for the design of elements that do not qualify as main windforce-resisting systems. Main windforce-resisting system pressures shall be used for the design of elements assigned to provide support and stability for the overall sunroom.

Category I: A thermally isolated sunroom with walls that are open or enclosed with insect screening or 0.5 mm (20 mil) maximum thickness plastic film. The space is nonhabitable and unconditioned.

Category II: A thermally isolated sunroom with enclosed walls. The openings are enclosed with translucent or transparent plastic or glass. The space is nonhabitable and unconditioned.

Category III: A thermally isolated sunroom with enclosed walls. The openings are enclosed with translucent or transparent plastic or glass. The sunroom fenestration complies with additional requirements for air infiltration resistance and water penetration resistance. The space is nonhabitable and unconditioned.

Category IV: A thermally isolated sunroom with enclosed walls. The sunroom is designed to be heated or cooled by a separate temperature control or system and is thermally isolated from the primary structure. The sunroom fenestration complies with additional requirements for water penetration resistance, air infiltration resistance and thermal performance. The space is nonhabitable and conditioned.

Category V: A sunroom with enclosed walls. The sunroom is designed to be heated or cooled and is open to the main structure. The sunroom fenestration complies with additional requirements for water penetration resistance, air infiltration resistance and thermal performance. The space is habitable and conditioned.

R301.2.1.2 Protection of openings. Exterior glazing in buildings located in windborne debris regions shall be protected from windborne debris. Glazed opening protection for windborne debris shall meet the requirements of the Large Missile Test of ASTM E1996 and ASTM E1886 as modified in Section 301.2.1.2.1. Garage door glazed opening protection for windborne debris shall meet the requirements of an approved impact-resisting standard or ANSI/DASMA 115.

Exception: Wood structural panels with a thickness of not less than $^{7}/_{16}$ inch (11 mm) and a span of not more than 8 feet (2438 mm) shall be permitted for opening protection. Panels shall be precut and attached to the framing surrounding the opening containing the product with the glazed opening. Panels shall be predrilled as required for the anchorage method and shall be secured with the attachment hardware provided. Attachments shall be designed to resist the component and cladding loads determined in accordance with either Table R301.2(2) or ASCE 7, with the permanent corrosion-resistant attachment hardware provided and anchors permanently installed on the building. Attachment in accordance with Table R301.2.1.2 is permitted for buildings with a mean roof height of 45 feet (13 728 mm) or less where the ultimate design wind speed, V_{ult}, is 180 mph (290 kph) or less.

R301.2.1.2.1 Application of ASTM E1996. The text of Section 2.2 of ASTM E1996 shall be substituted as follows:

2.2 ASCE Standard:

ASCE 7-10 American Society of Civil Engineers *Minimum Design Loads for Buildings and Other Structures*

The text of Section 6.2.2 of ASTM E1996 shall be substituted as follows:

6.2.2 Unless otherwise specified, select the wind zone based on the ultimate design wind speed, V_{ult}, as follows:

6.2.2.1 Wind Zone 1–130 mph ≤ ultimate design wind speed, V_{ult} < 140 mph.

6.2.2.2 Wind Zone 2–140 mph ≤ ultimate design wind speed, V_{ult} < 150 mph at greater than 1 mile (1.6 km) from the coastline. The coastline shall be measured from the mean high-water mark.

6.2.2.3 Wind Zone 3–150 mph (58 m/s) ≤ ultimate design wind speed, V_{ult} ≤ 170 mph (76 m/s), or 140 mph (54 m/s) ≤ ultimate design wind speed, V_{ult} ≤ 170 mph (76 m/s) and within 1 mile (1.6 km) of the coastline. The coastline shall be measured from the mean high-water mark.

6.2.2.4 Wind Zone 4–ultimate design wind speed, V_{ult} > 170 mph (76 m/s).

TABLE R301.2.1.2
WINDBORNE DEBRIS PROTECTION FASTENING SCHEDULE FOR WOOD STRUCTURAL PANELS[a, b, c, d]

FASTENER TYPE	FASTENER SPACING (inches)[a, b]		
	Panel span ≤ 4 feet	4 feet < panel span ≤ 6 feet	6 feet < panel span ≤ 8 feet
No. 8 wood-screw-based anchor with 2-inch embedment length	16	10	8
No. 10 wood-screw-based anchor with 2-inch embedment length	16	12	9
$^1/_4$-inch lag-screw-based anchor with 2-inch embedment length	16	16	16

For SI: 1 inch = 25.4 mm, 1 foot = 304.8 mm, 1 pound = 4.448 N, 1 mile per hour = 0.447 m/s.

a. This table is based on 180 mph ultimate design wind speeds, V_{ult}, and a 45-foot mean roof height.

b. Fasteners shall be installed at opposing ends of the wood structural panel. Fasteners shall be located not less than 1 inch from the edge of the panel.

c. Anchors shall penetrate through the exterior wall covering with an embedment length of not less than 2 inches into the building frame. Fasteners shall be located not less than $2^1/_2$ inches from the edge of concrete block or concrete.

d. Panels attached to masonry or masonry/stucco shall be attached using vibration-resistant anchors having an ultimate withdrawal capacity of not less than 1,500 pounds.

R301.2.1.3 Wind speed conversion. Where referenced documents are based on nominal design wind speeds and do not provide the means for conversion between ultimate design wind speeds and nominal design wind speeds, the ultimate design wind speeds, V_{ult}, of Figure R301.2(5)A shall be converted to nominal design wind speeds, V_{asd}, using Table R301.2.1.3.

R301.2.1.4 Exposure category. For each wind direction considered, an exposure category that adequately reflects the characteristics of ground surface irregularities shall be determined for the site at which the building or structure is to be constructed. For a site located in the transition zone between categories, the category resulting in the largest wind forces shall apply. Account shall be taken of variations in ground surface roughness that arise from natural topography and vegetation as well as from constructed features. For a site where multiple detached one- and two-family dwellings, townhouses or other structures are to be constructed as part of a subdivision or master-planned community, or are otherwise designated as a developed area by the authority having jurisdiction, the exposure category for an individual structure shall be based on the site conditions that will exist at the time when all adjacent structures on the site have been constructed, provided that their construction is expected to begin within 1 year of the start of construction for the structure for which the exposure category is determined. For any given wind direction, the exposure in which a specific building or other structure is sited shall be assessed as being one of the following categories:

1. Exposure B. Urban and suburban areas, wooded areas or other terrain with numerous closely spaced obstructions having the size of single-family dwellings or larger. Exposure B shall be assumed unless the site meets the definition of another type exposure.
2. Exposure C. Open terrain with scattered obstructions, including surface undulations or other irregularities, having heights generally less than 30 feet (9144 mm) extending more than 1,500 feet (457 m) from the building site in any quadrant. This exposure shall apply to any building located within Exposure B type terrain where the building is directly adjacent to open areas of Exposure C type terrain in any quadrant for a distance of more than 600 feet (183 m). This category includes flat, open country and grasslands.
3. Exposure D. Flat, unobstructed areas exposed to wind flowing over open water, smooth mud flats, salt flats and unbroken ice for a distance of not less than 5,000 feet (1524 m). This exposure shall apply only to those buildings and other structures exposed to the wind coming from over the unobstructed area. Exposure D extends downwind from the edge of the unobstructed area a distance of 600 feet (183 m) or 20 times the height of the building or structure, whichever is greater.

R301.2.1.5 Topographic wind effects. In areas designated in Table R301.2(1) as having local historical data documenting structural damage to buildings caused by wind speed-up at isolated hills, ridges and escarpments that are abrupt changes from the general topography of the area, topographic wind effects shall be considered in the design of the building in accordance with Section R301.2.1.5.1 or in accordance with the provisions of ASCE 7. See Figure R301.2.1.5.1(1) for topographic features for wind speed-up effect.

In these designated areas, topographic wind effects shall apply only to buildings sited on the top half of an isolated hill, ridge or escarpment where all of the following conditions exist:

1. The average slope of the top half of the hill, ridge or escarpment is 10 percent or greater.
2. The hill, ridge or escarpment is 60 feet (18 288 mm) or greater in height for Exposure B, 30 feet (9144 mm) or greater in height for Exposure C, and 15 feet (4572 mm) or greater in height for Exposure D.
3. The hill, ridge or escarpment is isolated or unobstructed by other topographic features of similar height in the upwind direction for a distance measured from its high point of 100 times its height or 2 miles (3.2 km), whichever is less. See Figure R301.2.1.5.1(3) for upwind obstruction.
4. The hill, ridge or escarpment protrudes by a factor of two or more above the height of other upwind topographic features located in any quadrant within a radius of 2 miles (3.2 km) measured from its high point.

R301.2.1.5.1 Simplified topographic wind speed-up method. As an alternative to the ASCE 7 topographic wind provisions, the provisions of Section R301.2.1.5.1 shall be permitted to be used to design for wind speed-up effects, where required by Section R301.2.1.5.

Structures located on the top half of isolated hills, ridges or escarpments meeting the conditions of Section R301.2.1.5 shall be designed for an increased basic wind speed as determined by Table R301.2.1.5.1. On the high side of an escarpment, the increased basic wind speed shall extend horizontally downwind from the edge of the escarpment 1.5 times the horizontal length of the upwind slope (1.5L) or 6 times the height of the escarpment (6H), whichever is greater. See Figure R301.2.1.5.1(2) for where wind speed increase is applied.

R301.2.2 Seismic provisions. Buildings in Seismic Design Categories C, D_0, D_1, and D_2 shall be constructed in accordance with the requirements of this section and other seismic requirements of this code. The seismic provisions of this code shall apply as follows:

1. Townhouses in Seismic Design Categories C, D_0, D_1 and D_2.
2. Detached one- and two-family dwellings in Seismic Design Categories, D_0, D_1 and D_2.

Buildings in Seismic Design Category E shall be designed to resist seismic loads in accordance with the *California Building Code*, except where the seismic design category is reclassified to a lower seismic design category in accordance with Section R301.2.2.1. Components of buildings not required to be designed to resist seismic loads shall be constructed in accordance with the provisions of this code.

R301.2.2.1 Determination of seismic design category. Buildings shall be assigned a seismic design category in accordance with Figure R301.2(2).

R301.2.2.1.1 Alternate determination of seismic design category. The seismic design categories and corresponding short-period design spectral response accelerations, S_{DS}, shown in Figure R301.2(2), are based on soil Site Class D, used as an assumed default, as defined in Section 1613.2.2 of the *California Building Code*. If soil conditions are determined by the building official to be Site Class A, B, or D, the seismic design category and short-period design spectral response accelerations, S_{DS}, for a site shall be allowed to be determined in accordance with Figure R301.2(3), or Section 1613.2 of the *California Building Code*. The value of S_{DS} determined in accordance with Section 1613.2 of the *California Building Code* is permitted to be used to set the seismic design category in accordance with Table R301.2.2.1.1, and to interpolate between values in Tables R602.10.3(3), R603.9.2(1) and other seismic design requirements of this code.

TABLE R301.2.2.1.1
SEISMIC DESIGN CATEGORY DETERMINATION

CALCULATED S_{DS}	SEISMIC DESIGN CATEGORY
$S_{DS} \leq 0.17g$	A
$0.17g < S_{DS} \leq 0.33g$	B
$0.33g < S_{DS} \leq 0.50g$	C
$0.50g < S_{DS} \leq 0.67g$	D_0
$0.67g < S_{DS} \leq 0.83g$	D_1
$0.83g < S_{DS} \leq 1.25g$	D_2
$1.25g < S_{DS}$	E

R301.2.2.1.2 Alternative determination of Seismic Design Category E. Buildings located in Seismic Design Category E in accordance with Figure R301.2(2), or Figure R301.2(3) where applicable, are permitted to be reclassified as being in Seismic Design Category D_2 provided that one of the following is done:

1. A more detailed evaluation of the seismic design category is made in accordance with the provisions and maps of the *California Building Code*. Buildings located in Seismic Design Category E in accordance with Table R301.2.2.1.1, but located in Seismic Design Category D in accordance with the *California Building Code*, shall be permitted to be designed using the Seismic Design Category D_2 requirements of this code.
2. Buildings located in Seismic Design Category E that conform to the following additional restrictions are permitted to be constructed in accordance with the provisions for Seismic Design Category D_2 of this code:
   - 2.1. All exterior shear wall lines or braced wall panels are in one plane vertically from the foundation to the uppermost story.
   - 2.2. Floors shall not cantilever past the exterior walls.
   - 2.3. The building is within the requirements of Section R301.2.2.2.6 for being considered as regular.

TABLE R301.2(1)
CLIMATIC AND GEOGRAPHIC DESIGN CRITERIA

GROUND SNOW LOAD[o]	WIND DESIGN				SEISMIC DESIGN CATEGORY[f]	SUBJECT TO DAMAGE FROM			WINTER DESIGN TEMP[e]	ICE BARRIER UNDERLAYMENT REQUIRED[h]	FLOOD HAZARDS[g]	AIR FREEZING INDEX[i]	MEAN ANNUAL TEMP[j]
	Speed[d] (mph)	Topographic effects[k]	Special wind region[l]	Windborne debris zone[m]		Weathering[a]	Frost line depth[b]	Termite[c]					
—	—	—	—	—	—	—	—	—	—	—	—	—	—

MANUAL J DESIGN CRITERIA[n]							
Elevation	Lattitude	Winter heating	Summer cooling	Altitude correction factor	Indoor design temperature	Design temperature cooling	Heating temperature difference
—	—	—	—	—	—	—	—
Cooling temperature difference	Wind velocity heating	Wind velocity cooling	Coincident wet bulb	Daily range	Winter humidity	Summer humidity	—
—	—	—	—	—	—	—	—

For SI: 1 pound per square foot = 0.0479 kPa, 1 mile per hour = 0.447 m/s.

a. Where weathering requires a higher strength concrete or grade of masonry than necessary to satisfy the structural requirements of this code, the frost line depth strength required for weathering shall govern. The weathering column shall be filled in with the weathering index, "negligible," "moderate" or "severe" for concrete as determined from Figure R301.2(4). The grade of masonry units shall be determined from ASTM C34, C55, C62, C73, C90, C129, C145, C216 or C652.

b. Where the frost line depth requires deeper footings than indicated in Figure R403.1(1), the frost line depth strength required for weathering shall govern. The jurisdiction shall fill in the frost line depth column with the minimum depth of footing below finish grade.

c. The jurisdiction shall fill in this part of the table to indicate the need for protection depending on whether there has been a history of local subterranean termite damage.

d. The jurisdiction shall fill in this part of the table with the wind speed from the basic wind speed map [Figure R301.2(5)A]. Wind exposure category shall be determined on a site-specific basis in accordance with Section R301.2.1.4.

e. Temperatures shall be permitted to reflect local climates or local weather experience as determined by the building official. [Also see Figure R301.2(1).]

f. The jurisdiction shall fill in this part of the table with the seismic design category determined from Section R301.2.2.1.

g. The jurisdiction shall fill in this part of the table with (a) the date of the jurisdiction's entry into the National Flood Insurance Program (date of adoption of the first code or ordinance for management of flood hazard areas), (b) the date(s) of the Flood Insurance Study and (c) the panel numbers and dates of the currently effective FIRMs and FBFMs or other flood hazard map adopted by the authority having jurisdiction, as amended.

h. In accordance with Sections R905.1.2, R905.4.3.1, R905.5.3.1, R905.6.3.1, R905.7.3.1 and R905.8.3.1, where there has been a history of local damage from the effects of ice damming, the jurisdiction shall fill in this part of the table with "YES." Otherwise, the jurisdiction shall fill in this part of the table with "NO."

i. The jurisdiction shall fill in this part of the table with the 100-year return period air freezing index (BF-days) from Figure R403.3(2) or from the 100-year (99 percent) value on the National Climatic Data Center data table "Air Freezing Index-USA Method (Base 32°F)."

j. The jurisdiction shall fill in this part of the table with the mean annual temperature from the National Climatic Data Center data table "Air Freezing Index-USA Method (Base 32°F)."

k. In accordance with Section R301.2.1.5, where there is local historical data documenting structural damage to buildings due to topographic wind speed-up effects, the jurisdiction shall fill in this part of the table with "YES." Otherwise, the jurisdiction shall indicate "NO" in this part of the table.

l. In accordance with Figure R301.2(5)A, where there is local historical data documenting unusual wind conditions, the jurisdiction shall fill in this part of the table with "YES" and identify any specific requirements. Otherwise, the jurisdiction shall indicate "NO" in this part of the table.

m. In accordance with Section R301.2.1.2 the jurisdiction shall indicate the wind-borne debris wind zone(s). Otherwise, the jurisdiction shall indicate "NO" in this part of the table.

n. The jurisdiction shall fill in these sections of the table to establish the design criteria using Table 1a or 1b from ACCA Manual J or established criteria determined by the jurisdiction.

o. The jurisdiction shall fill in this section of the table using the Ground Snow Loads in Figure R301.2(6).

TABLE R301.2(2)
COMPONENT AND CLADDING LOADS FOR A BUILDING WITH A MEAN ROOF HEIGHT OF 30 FEET LOCATED IN EXPOSURE B (ASD) (psf)[a, b, c, d, a]

	ZONE	EFFECTIVE WIND AREA (feet^2)	ULTIMATE DESIGN WIND SPEED, V_{ULT} (mph)																	
			110		115		120		130		140		150		160		170		180	
Roof 0 to 7 degrees	1	10	10.0	-13.0	10.0	-14.0	10.0	-15.0	10.0	-18.0	10.0	-21.0	9.9	-24.0	11.2	-27.0	12.6	-31.0	14.2	-35.0
	1	20	10.0	-12.0	10.0	-13.0	10.0	-15.0	10.0	-17.0	10.0	-20.0	9.2	-23.0	10.6	-26.0	11.9	-30.0	13.3	-34.1
	1	50	10.0	-12.0	10.0	-13.0	10.0	-14.0	10.0	-17.0	10.0	-19.0	8.5	-22.0	10.0	-26.0	10.8	-29.0	12.2	-32.9
	1	100	10.0	-11.0	10.0	-13.0	10.0	-14.0	10.0	-16.0	10.0	-19.0	7.8	-22.0	10.0	-25.0	10.0	-28.0	11.3	-32.0
	2	10	10.0	-21.0	10.0	-23.0	10.0	-26.0	10.0	-30.0	10.0	-35.0	9.9	-40.0	11.2	-46.0	12.6	-52.0	14.2	-58.7
	2	20	10.0	-19.0	10.0	-21.0	10.0	-23.0	10.0	-27.0	10.0	-31.0	9.2	-36.0	10.6	-41.0	11.9	-46.0	13.3	-52.4
	2	50	10.0	-16.0	10.0	-18.0	10.0	-19.0	10.0	-23.0	10.0	-26.0	8.5	-30.0	10.0	-34.0	10.8	-39.0	12.2	-44.1
	2	100	10.0	-14.0	10.0	-15.0	10.0	-16.0	10.0	-19.0	10.0	-22.0	7.8	-26.0	10.0	-30.0	10.0	-33.0	11.3	-37.9
	3	10	10.0	-33.0	10.0	-36.0	10.0	-39.0	10.0	-46.0	10.0	-53.0	9.9	-61.0	11.2	-69.0	12.6	-78.0	14.2	-88.3
	3	20	10.0	-27.0	10.0	-29.0	10.0	-32.0	10.0	-38.0	10.0	-44.0	9.2	-50.0	10.6	-57.0	11.9	-65.0	13.3	-73.1
	3	50	10.0	-19.0	10.0	-21.0	10.0	-23.0	10.0	-27.0	10.0	-32.0	8.5	-36.0	10.0	-41.0	10.8	-47.0	12.2	-53.1
	3	100	10.0	-14.0	10.0	-15.0	10.0	-16.0	10.0	-19.0	10.0	-22.0	7.8	-26.0	10.0	-30.0	10.0	-33.0	11.3	-37.9
Roof > 7 to 27 degrees	1	10	10.0	-11.0	10.0	-13.0	10.0	-14.0	10.5	-16.0	12.2	-19.0	14.0	-22.0	15.9	-25.0	17.9	-28.0	20.2	-32.0
	1	20	10.0	-11.0	10.0	-12.0	10.0	-13.0	10.0	-16.0	11.1	-18.0	12.8	-21.0	14.5	-24.0	16.4	-27.0	18.4	-31.1
	1	50	10.0	-11.0	10.0	-12.0	10.0	-13.0	10.0	-15.0	10.0	-18.0	11.1	-20.0	12.7	-23.0	14.3	-26.0	16.0	-29.9
	1	100	10.0	-10.0	10.0	-11.0	10.0	-12.0	10.0	-15.0	10.0	-17.0	9.9	-20.0	11.2	-22.0	12.6	-25.0	14.2	-29.0
	2	10	10.0	-20.0	10.0	-22.0	10.0	-24.0	10.5	-29.0	12.2	-33.0	14.0	-38.0	15.9	-44.0	17.9	-49.0	20.2	-55.8
	2	20	10.0	-19.0	10.0	-20.0	10.0	-22.0	10.0	-26.0	11.1	-31.0	12.8	-35.0	14.5	-40.0	16.4	-45.0	18.4	-51.2
	2	50	10.0	-16.0	10.0	-18.0	10.0	-20.0	10.0	-23.0	10.0	-27.0	11.1	-31.0	12.7	-35.0	14.3	-40.0	16.0	-45.4
	2	100	10.0	-15.0	10.0	-16.0	10.0	-18.0	10.0	-21.0	10.0	-24.0	9.9	-28.0	11.2	-32.0	12.6	-36.0	14.2	-40.9
	3	10	10.0	-30.0	10.0	-33.0	10.0	-36.0	10.5	-43.0	12.2	-49.0	14.0	-57.0	15.9	-65.0	17.9	-73.0	20.2	-82.4
	3	20	10.0	-28.0	10.0	-31.0	10.0	-34.0	10.0	-40.0	11.1	-46.0	12.8	-53.0	14.5	-60.0	16.4	-68.0	18.4	-77.0
	3	50	10.0	-26.0	10.0	-28.0	10.0	-31.0	10.0	-36.0	10.0	-42.0	11.1	-48.0	12.7	-55.0	14.3	-62.0	16.0	-69.9
	3	100	10.0	-24.0	10.0	-26.0	10.0	-28.0	10.0	-33.0	10.0	-39.0	9.9	-44.0	11.2	-51.0	12.6	-57.0	14.2	-64.6
Roof > 27 to 45 degrees	1	10	11.9	-13.0	13.1	-14.0	14.2	-15.0	16.7	-18.0	19.4	-21.0	22.2	-24.0	25.3	-27.0	28.5	-31.0	32.0	-35.0
	1	20	11.6	-12.0	12.7	-13.0	13.8	-14.0	16.2	-17.0	18.8	-20.0	21.6	-23.0	24.6	-26.0	27.7	-29.0	31.1	-33.2
	1	50	11.2	-11.0	12.2	-12.0	13.3	-13.0	15.6	-16.0	18.1	-18.0	20.8	-21.0	23.6	-24.0	26.7	-27.0	29.9	-30.8
	1	100	10.9	-10.0	11.9	-11.0	12.9	-12.0	15.1	-15.0	17.6	-17.0	20.2	-20.0	22.9	-22.0	25.9	-25.0	29.0	-29.0
	2	10	11.9	-15.0	13.1	-16.0	14.2	-18.0	16.7	-21.0	19.4	-24.0	22.2	-28.0	25.3	-32.0	28.5	-36.0	32.0	-40.9
	2	20	11.6	-14.0	12.7	-16.0	13.8	-17.0	16.2	-20.0	18.8	-23.0	21.6	-27.0	24.6	-30.0	27.7	-34.0	31.1	-39.1
	2	50	11.2	-13.0	12.2	-15.0	13.3	-16.0	15.6	-19.0	18.1	-22.0	20.8	-25.0	23.6	-29.0	26.7	-32.0	29.9	-36.8
	2	100	10.9	-13.0	11.9	-14.0	12.9	-15.0	15.1	-18.0	17.6	-21.0	20.2	-24.0	22.9	-27.0	25.9	-31.0	29.0	-35.0
	3	10	11.9	-15.0	13.1	-16.0	14.2	-18.0	16.7	-21.0	19.4	-24.0	22.2	-28.0	25.3	-32.0	28.5	-36.0	32.0	-40.9
	3	20	11.6	-14.0	12.7	-16.0	13.8	-17.0	16.2	-20.0	18.8	-23.0	21.6	-27.0	24.6	-30.0	27.7	-34.0	31.1	-39.1
	3	50	11.2	-13.0	12.2	-15.0	13.3	-16.0	15.6	-19.0	18.1	-22.0	20.8	-25.0	23.6	-29.0	26.7	-32.0	29.9	-36.8
	3	100	10.9	-13.0	11.9	-14.0	12.9	-15.0	15.1	-18.0	17.6	-21.0	20.2	-24.0	22.9	-27.0	25.9	-31.0	29.0	-35.0
Wall	4	10	13.1	-14.0	14.3	-15.0	15.5	-16.0	18.2	-19.0	21.2	-22.0	24.3	-26.0	27.7	-30.0	31.2	-33.0	35.0	-37.9
	4	20	12.5	-13.0	13.6	-14.0	14.8	-16.0	17.4	-19.0	20.2	-22.0	23.2	-25.0	26.4	-28.0	29.7	-32.0	33.4	-36.4
	4	50	11.7	-12.0	12.8	-14.0	13.9	-15.0	16.3	-17.0	19.0	-20.0	21.7	-23.0	24.7	-27.0	27.9	-30.0	31.3	-34.3
	4	100	11.1	-12.0	12.1	-13.0	13.2	-14.0	15.5	-17.0	18.0	-19.0	20.6	-22.0	23.5	-25.0	26.5	-29.0	29.8	32.7
	4	500	10.0	-10.0	10.6	-11.0	11.6	-12.0	13.6	-15.0	15.8	-17.0	18.1	-20.0	20.6	-22.0	23.2	-25.0	26.1	-29.0
	5	10	13.1	-17.0	14.3	-19.0	15.5	-20.0	18.2	-24.0	21.2	-28.0	24.3	-32.0	27.7	-37.0	31.2	-41.0	35.0	-46.8
	5	20	12.5	-16.0	13.6	-17.0	14.8	-19.0	17.4	-22.0	20.2	-26.0	23.2	-30.0	26.4	-34.0	29.7	-39.0	33.4	-43.7
	5	50	11.7	-14.0	12.8	-16.0	13.9	-17.0	16.3	-20.0	19.0	-23.0	21.7	-27.0	24.7	-31.0	27.9	-35.0	31.3	-39.5
	5	100	11.1	-13.0	12.1	-14.0	13.2	-16.0	15.5	-19.0	18.0	-22.0	20.6	-25.0	23.5	-28.0	26.5	-32.0	29.8	-36.4
	5	500	10.0	-10.0	10.6	-11.0	11.6	-12.0	13.6	-15.0	15.8	-17.0	18.1	-20.0	20.6	-22.0	23.2	-25.0	26.1	-29.0

For SI: 1 foot = 304.8 mm, 1 square foot = 0.0929 m^2, 1 mile per hour = 0.447 m/s, 1 pound per square foot = 0.0479 kPa.

a. The effective wind area shall be equal to the span length multiplied by an effective width. This width shall be permitted to be not less than one-third the span length. For cladding fasteners, the effective wind area shall not be greater than the area that is tributary to an individual fastener.

b. For effective areas between those given, the load shall be interpolated or the load associated with the lower effective area shall be used.

c. Table values shall be adjusted for height and exposure by multiplying by the adjustment coefficient in Table R301.2(3).

d. See Figure R301.2(8) for location of zones.

e. Plus and minus signs signify pressures acting toward and away from the building surfaces.

TABLE R301.2(3)
HEIGHT AND EXPOSURE ADJUSTMENT COEFFICIENTS FOR TABLE R301.2(2)

MEAN ROOF HEIGHT	EXPOSURE		
	B	C	D
15	1.00	1.21	1.47
20	1.00	1.29	1.55
25	1.00	1.35	1.61
30	1.00	1.40	1.66
35	1.05	1.45	1.70
40	1.09	1.49	1.74
45	1.12	1.53	1.78
50	1.16	1.56	1.81
55	1.19	1.59	1.84
60	1.22	1.62	1.87

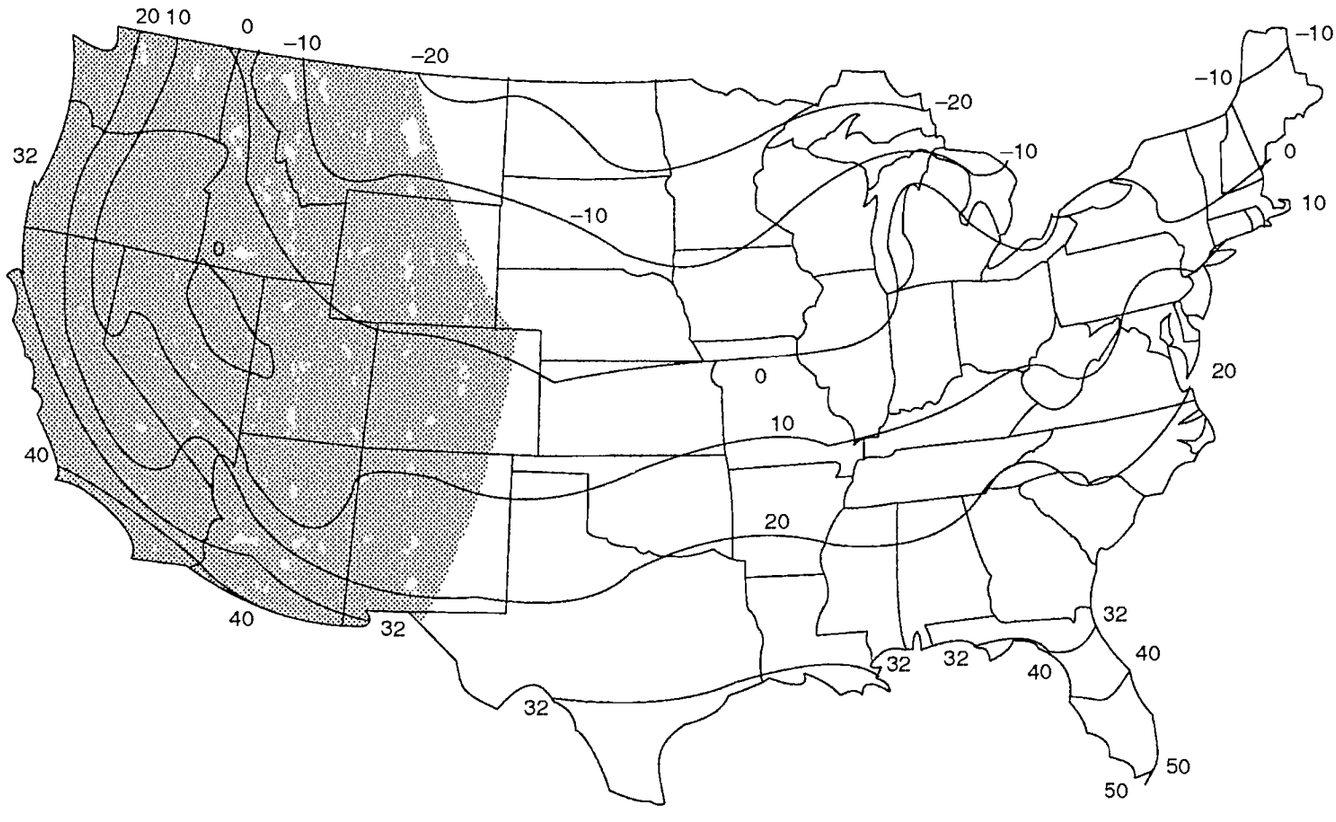

For SI: °C = [(°F)-32]/1.8.

FIGURE R301.2(1)
ISOLINES OF THE 97½-PERCENT WINTER (DECEMBER, JANUARY AND FEBRUARY) DESIGN TEMPERATURES (°F)

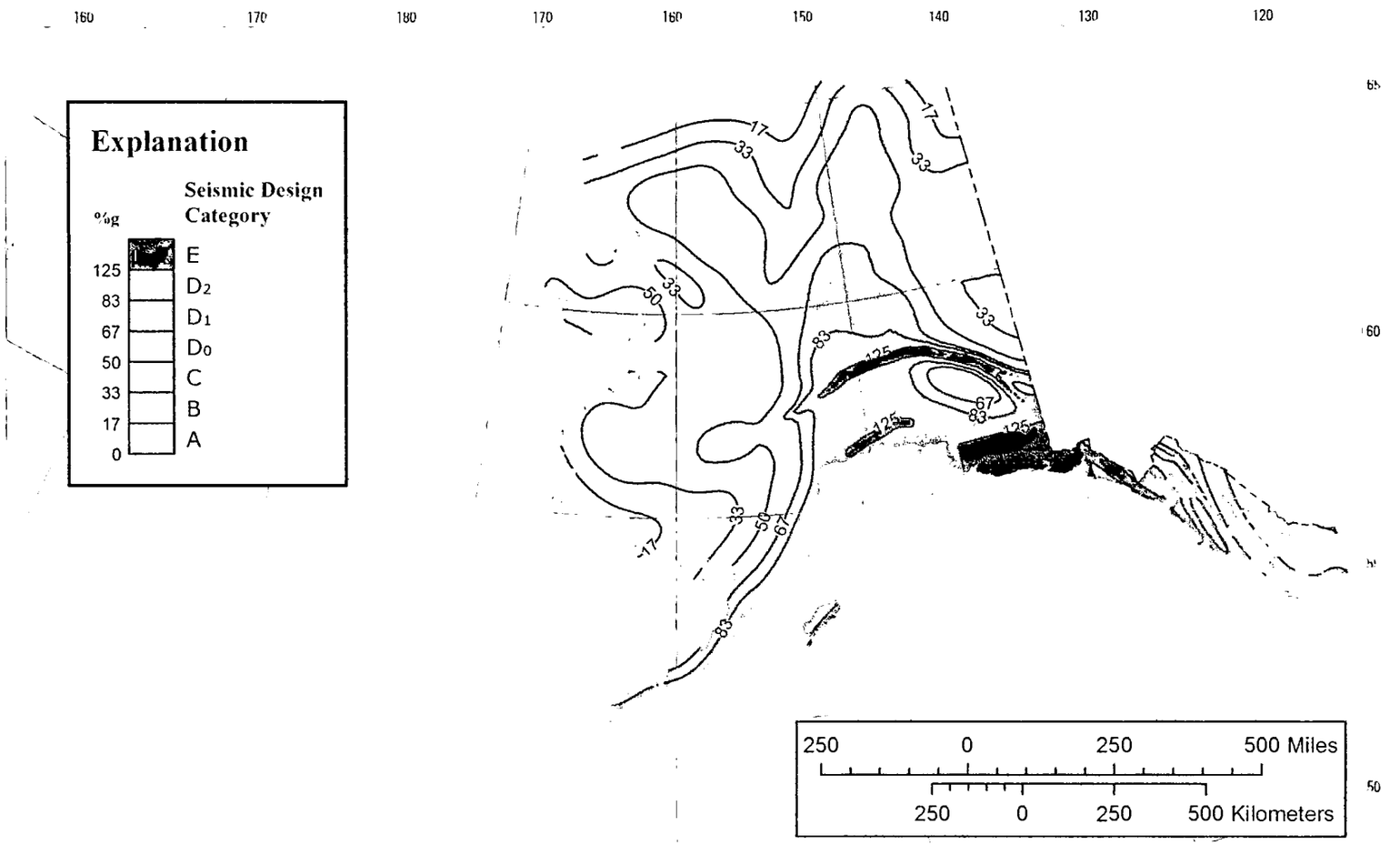

FIGURE R301.2(2)
SEISMIC DESIGN CATEGORIES

(continued)

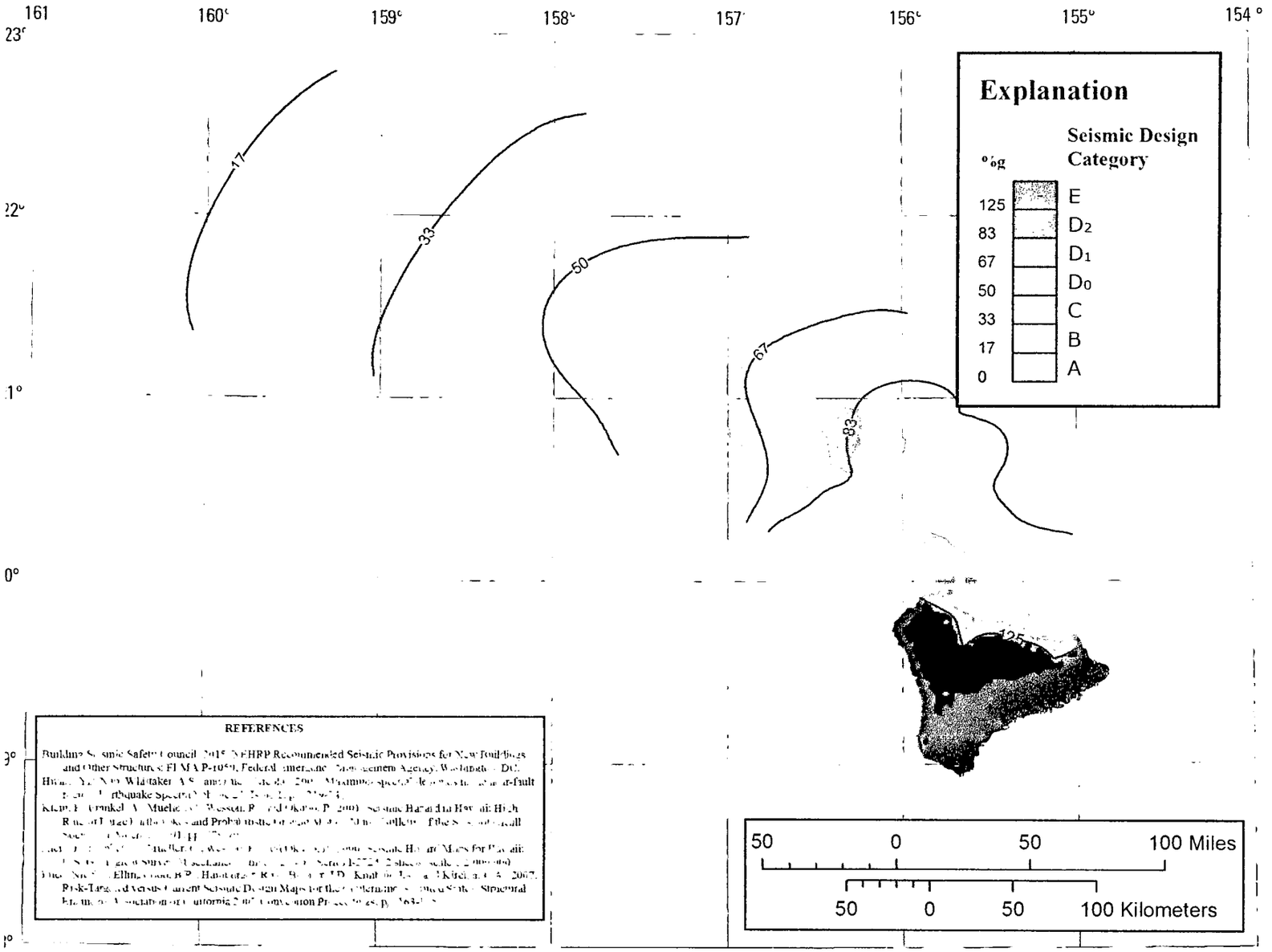

FIGURE R301.2(2)—continued
SEISMIC DESIGN CATEGORIES

(continued)

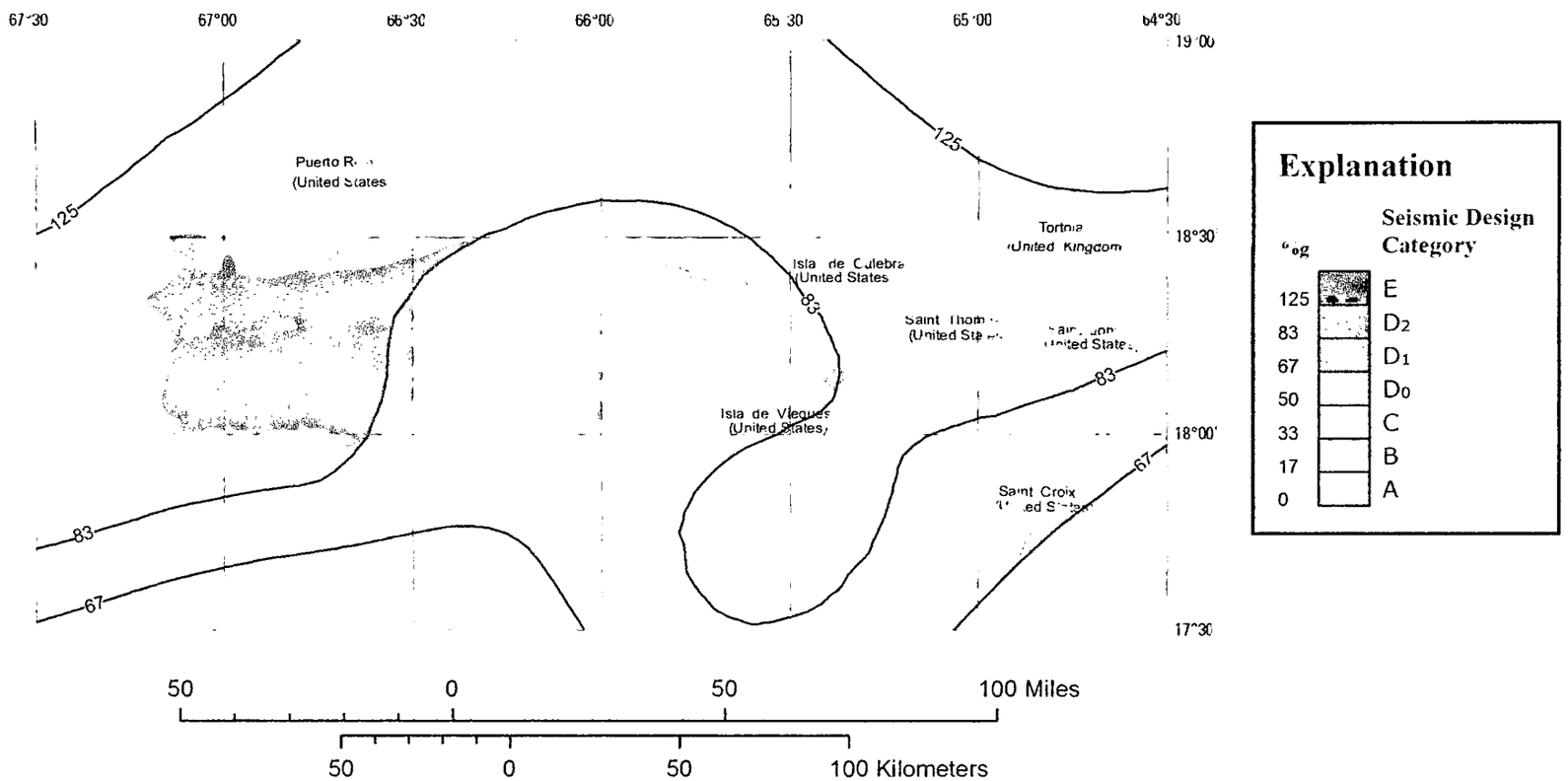

FIGURE R301.2(2)—continued
SEISMIC DESIGN CATEGORIES

(continued)

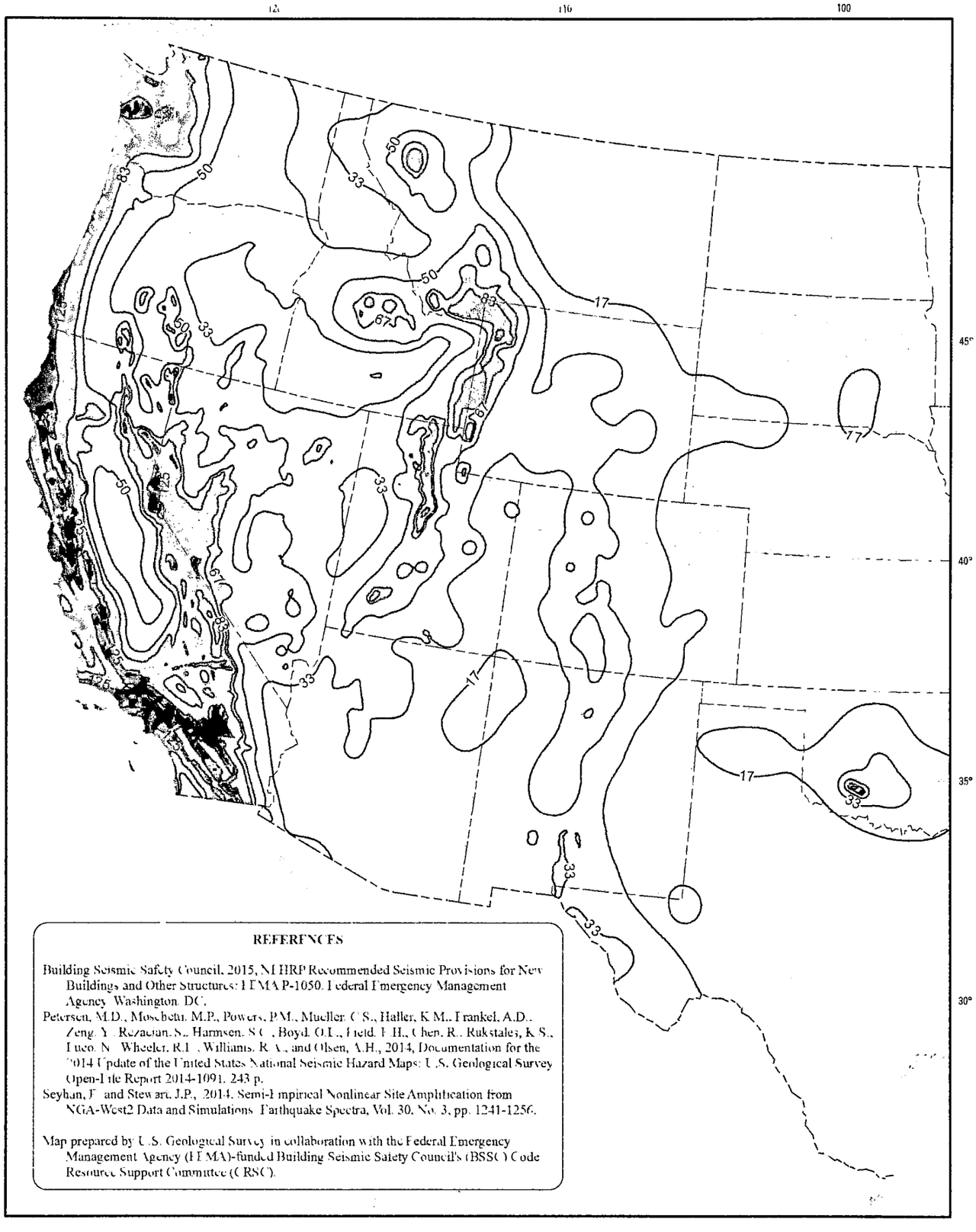

FIGURE R301.2(2)—continued
SEISMIC DESIGN CATEGORIES

(continued)

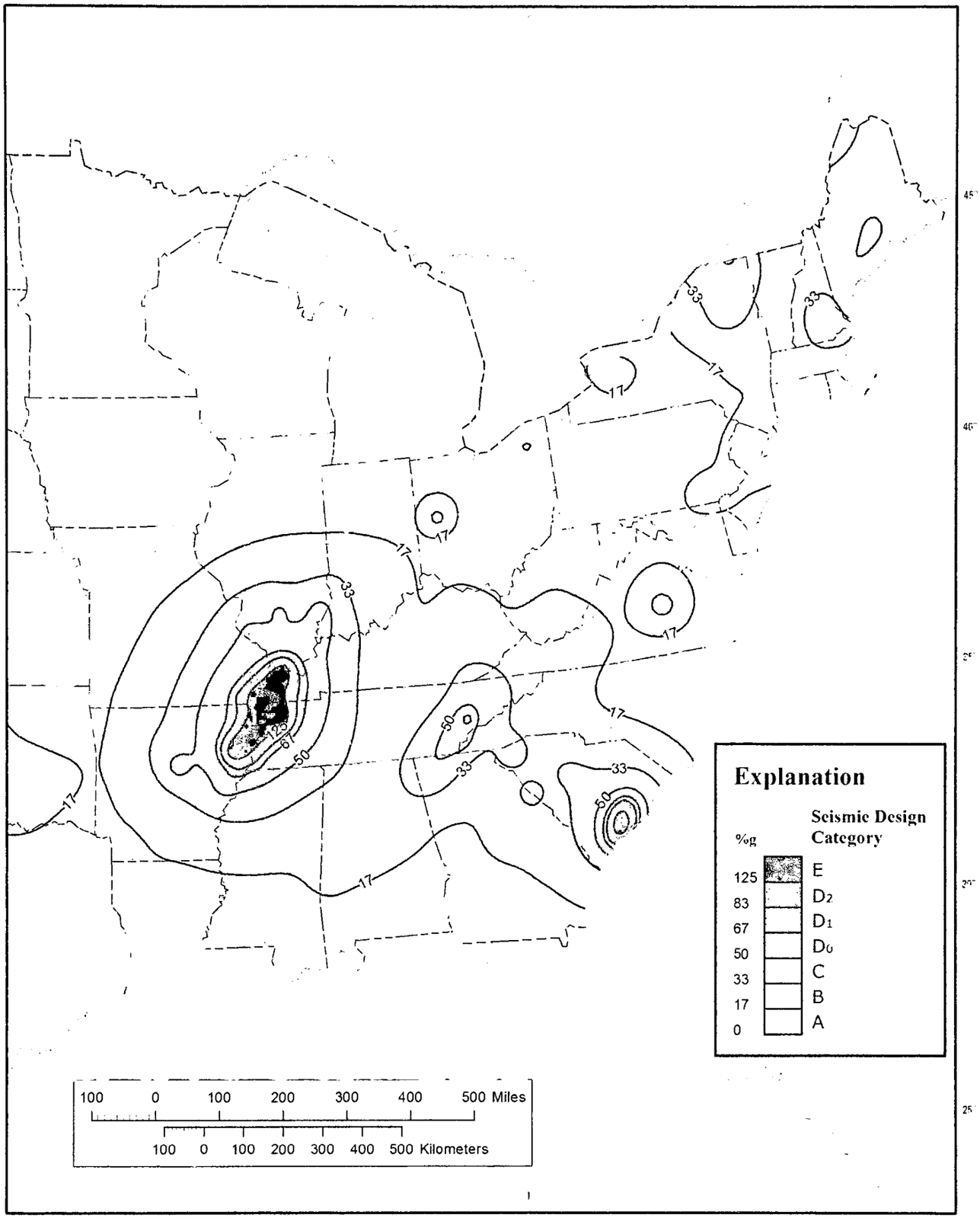

FIGURE R301.2(2)—continued
SEISMIC DESIGN CATEGORIES

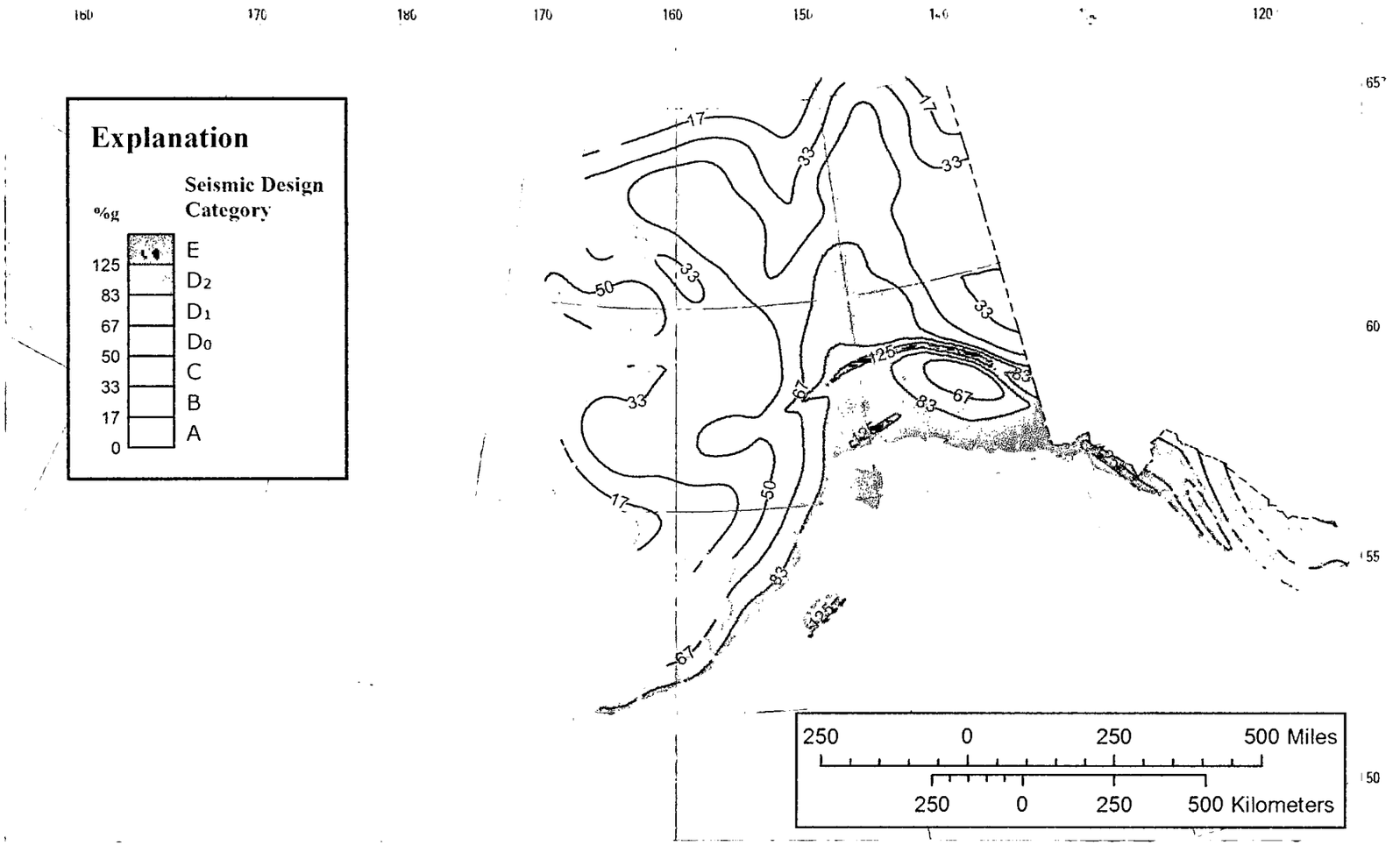

REFERENCES

FIGURE R301.2(3)
ALTERNATE SEISMIC DESIGN CATEGORIES

(continued)

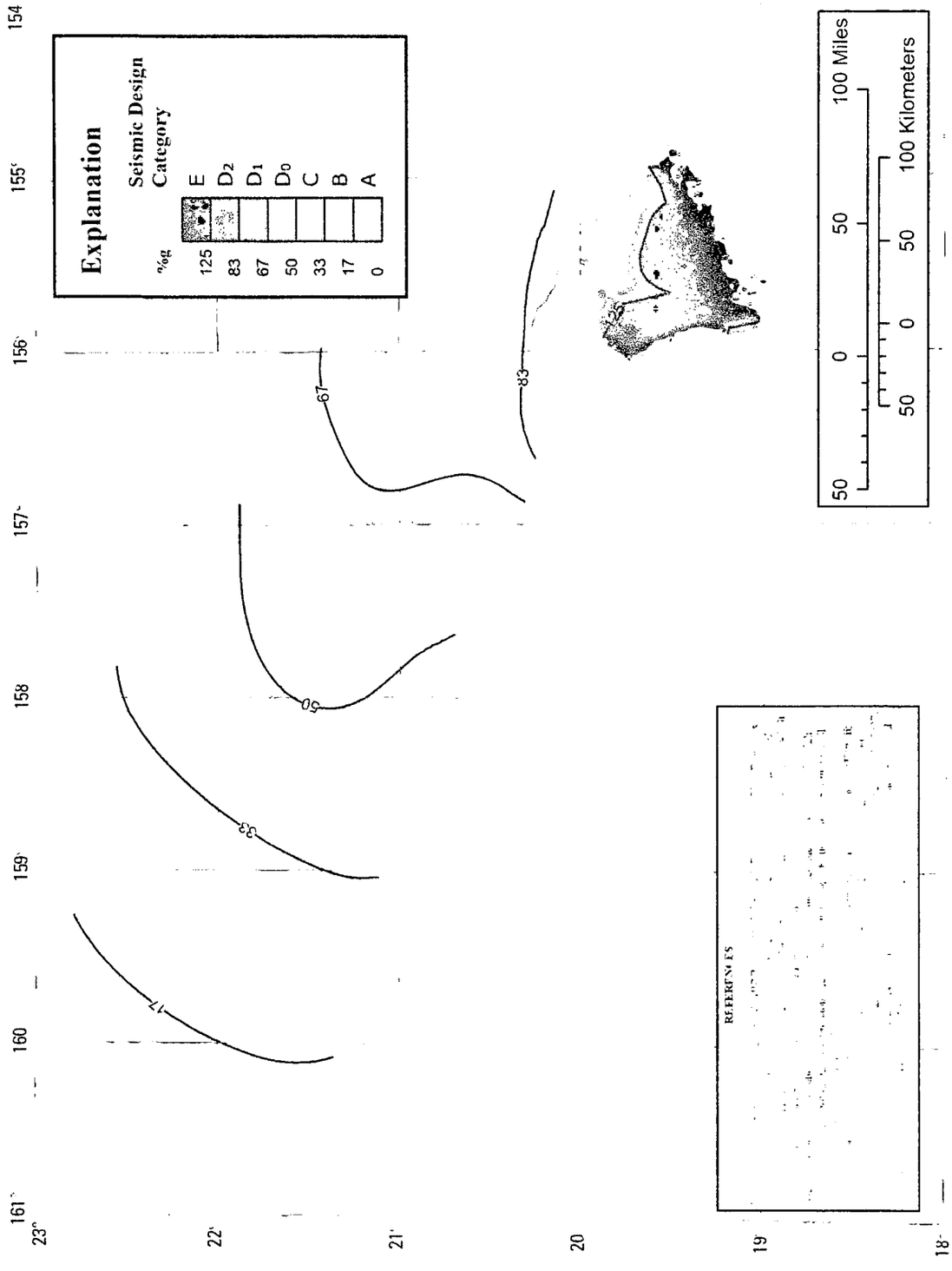

FIGURE R301.2(3)—continued
ALTERNATE SEISMIC DESIGN CATEGORIES

(continued)

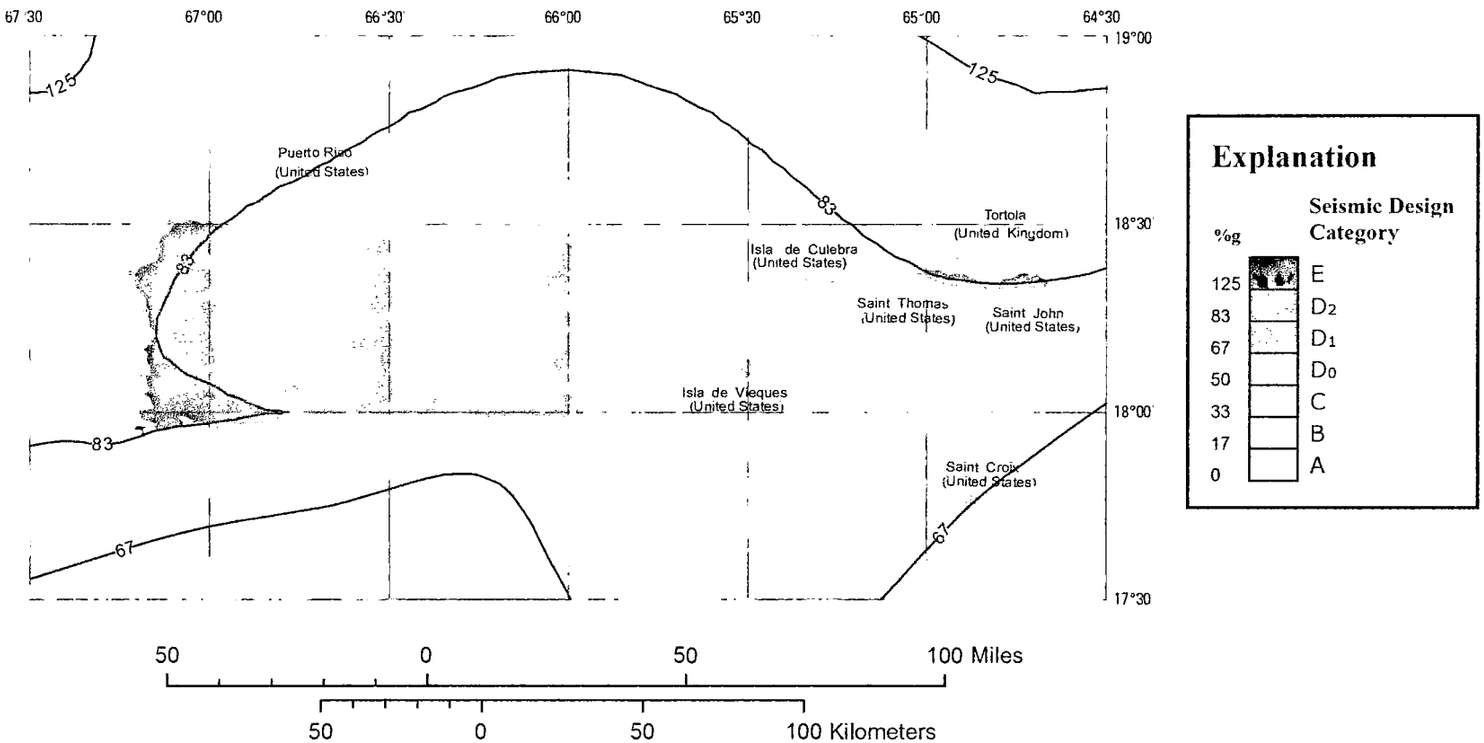

REFERENCES

Building Seismic Safety Council, 2003. NEHRP Recommended Seismic Provisions for New Buildings and Other Structures: FEMA P-450, 2nd ed. Federal Emergency Management Agency, Washington, DC.

Huang, Y., Nan Whittaker, A.S., and Luco, N., 2008. Maximum spectral demands in the near-fault region. Earthquake Spectra, Volume 24, Issue 1, pp. 319–341.

Luco, N., Ellingwood, B.R., Hamburger, R.O., Hooper, J.D., Kappes, J.K., and Kircher, C.A., 2007. Risk-Targeted Versus Current Seismic Design Maps for the Conterminous United States. Structural Engineers Association of California (2007 Convention Proceedings), pp. 115–124.

Mueller, C., Frankel, A., Petersen, M., and Leyendecker, E., 2003. Documentation for 2003 Seismic Hazard Maps for Puerto Rico and the U.S. Virgin Islands. U.S. Geological Survey, Open-File Report 03-267.

Map prepared by the U.S. Geological Survey in collaboration with the Federal Emergency Management Agency (FEMA) and model Building Seismic Safety Council (BSSC) Design Maps Committee (DMC).

FIGURE R301.2(3)—continued
ALTERNATE SEISMIC DESIGN CATEGORIES

(continued)

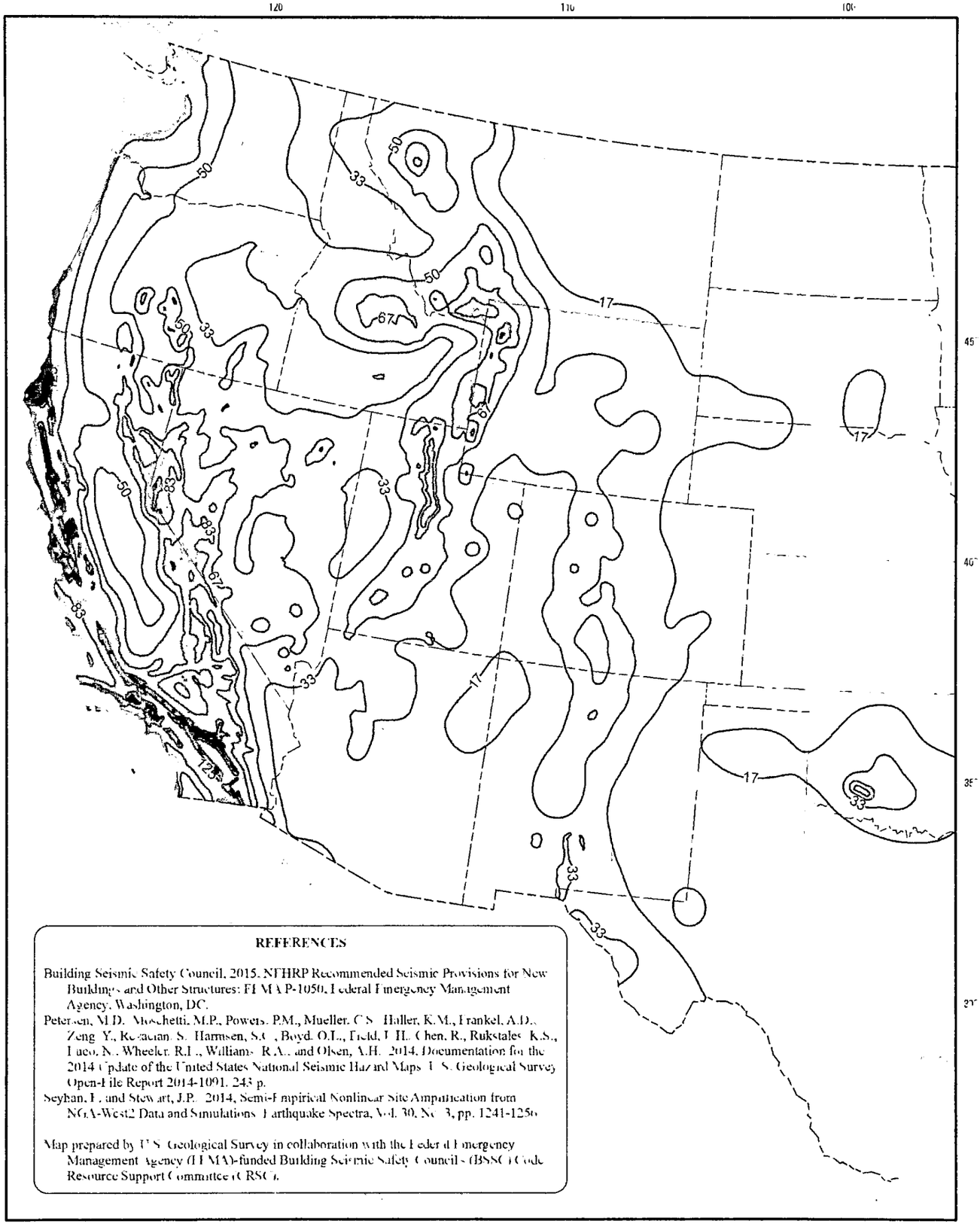

FIGURE R301.2(3)—continued
ALTERNATE SEISMIC DESIGN CATEGORIES

(continued)

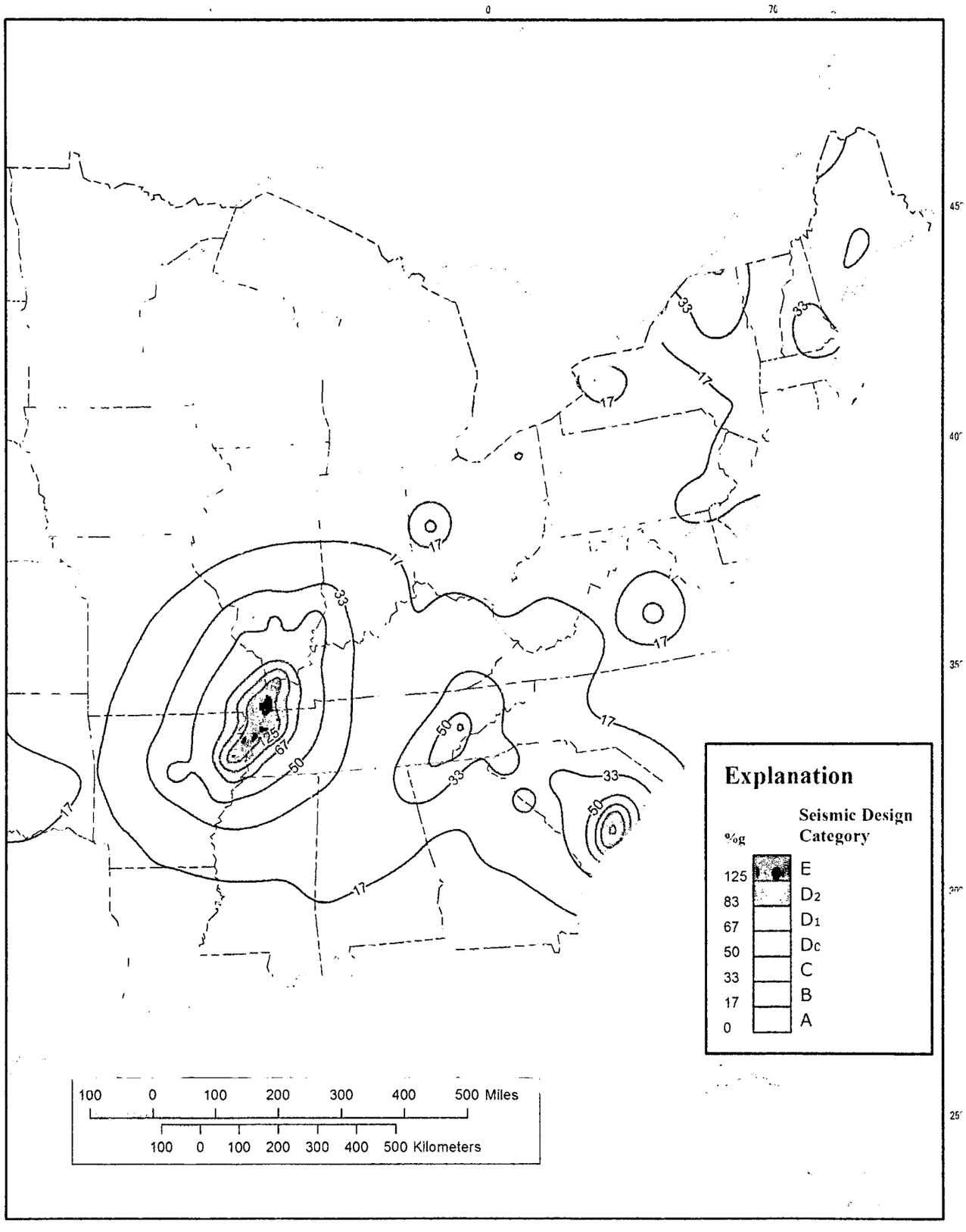

FIGURE R301.2(3)—continued
ALTERNATE SEISMIC DESIGN CATEGORIES

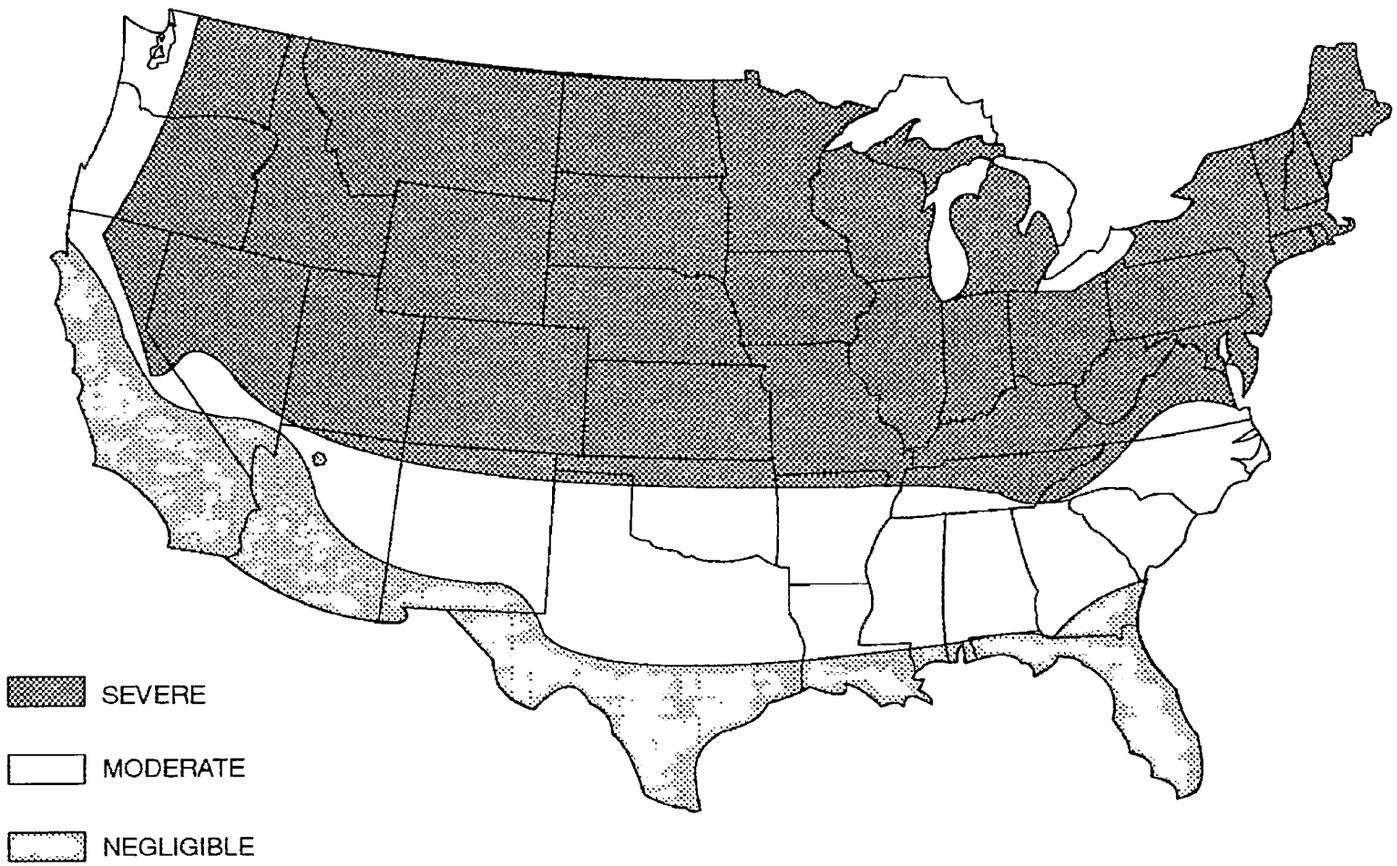

a. Alaska and Hawaii are classified as severe and negligible, respectively

b. Lines defining areas are approximate only. Local conditions may be more or less severe than indicated by region classification. A severe classification is where weather conditions result in significant snowfall combined with extended periods during which there is little or no natural thawing causing deicing salts to be used extensively.

FIGURE R301.2(4)
WEATHERING PROBABILITY MAP FOR CONCRETE[a, b]

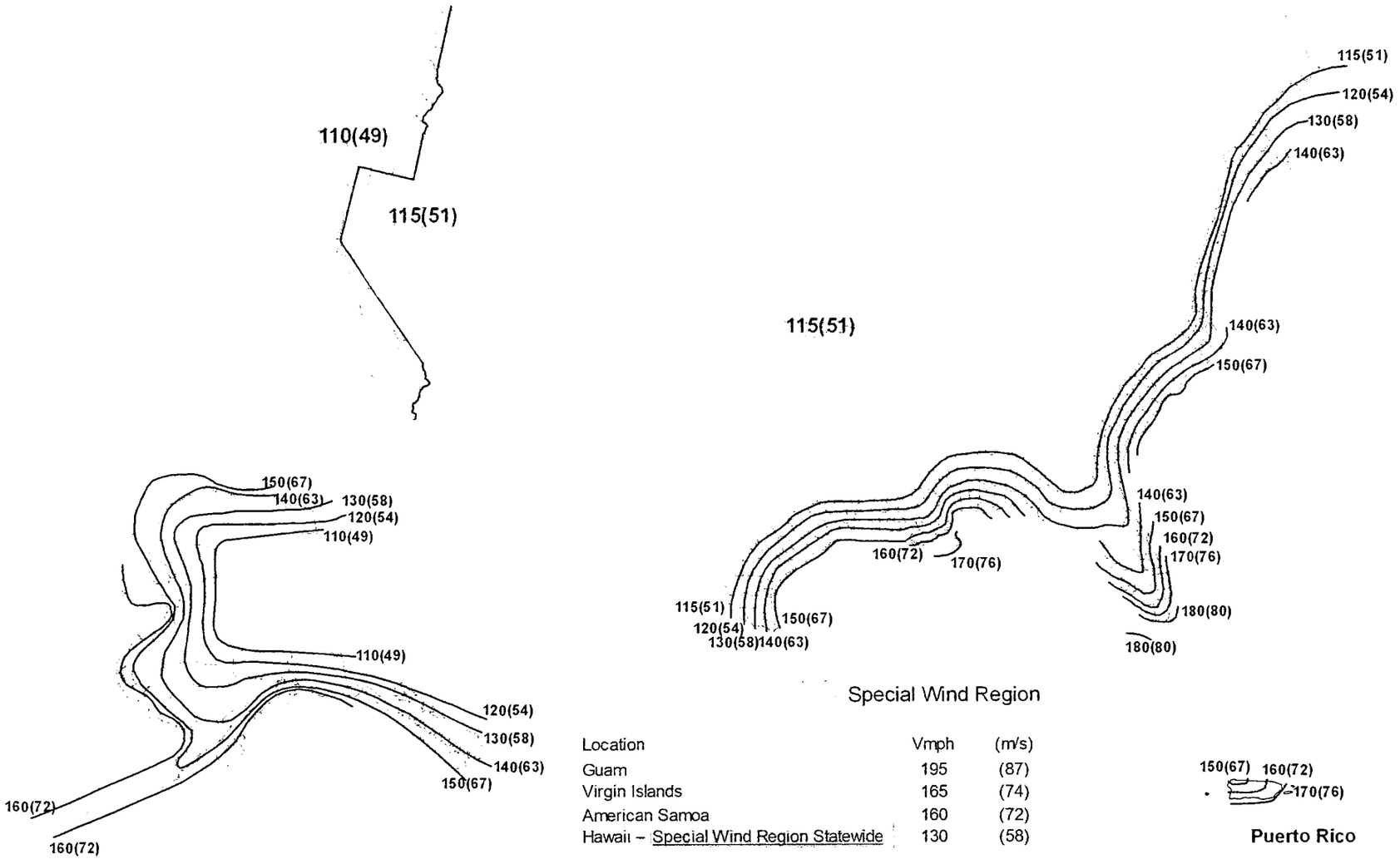

Location	Vmph	(m/s)
Guam	195	(87)
Virgin Islands	165	(74)
American Samoa	160	(72)
Hawaii – Special Wind Region Statewide	130	(58)

Notes:

1. Values are nominal design 3-second gust wind speeds in miles per hour (m/s) at 33 ft (10m) above ground for Exposure C category.
2. Linear interpolation between contours is permitted.
3. Islands and coastal areas outside the last contour shall use the last wind speed contour of the coastal area.
4. Mountainous terrain, gorges, ocean promontories, and special wind regions shall be examined for unusual wind conditions.
5. Wind speeds correspond to approximately a 7% probability of exceedance in 50 years (Annual Exceedance Probability = 0.00143, MRI = 700 Years).

FIGURE R301.2(5)A
ULTIMATE DESIGN WIND SPEEDS

Wind Design Required

Special Wind Region

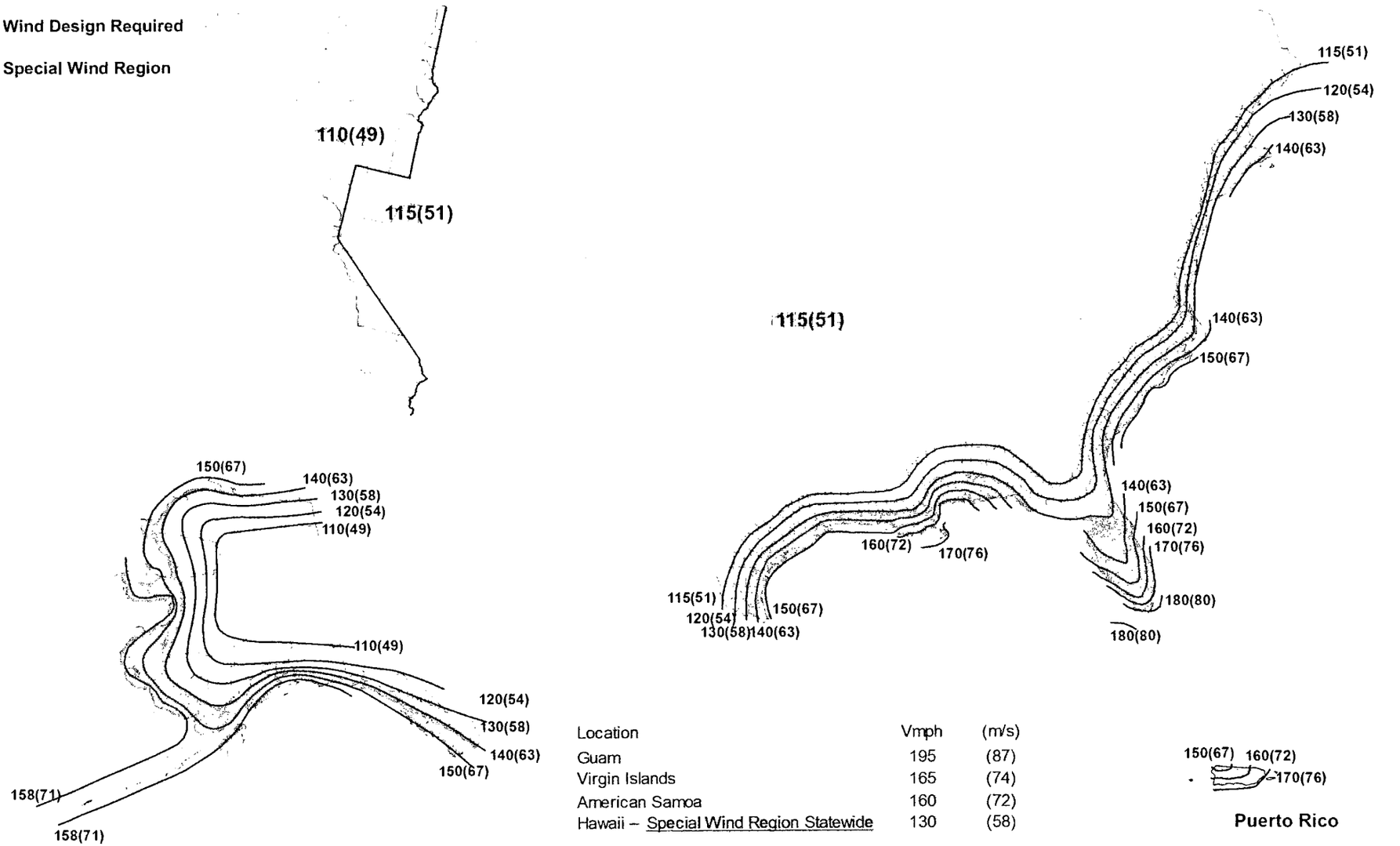

Location	Vmph	(m/s)
Guam	195	(87)
Virgin Islands	165	(74)
American Samoa	160	(72)
Hawaii – Special Wind Region Statewide	130	(58)

Notes:

1. Values are nominal design 3-second gust wind speeds in miles per hour (m/s) at 33 ft (10m) above ground for Exposure C category.
2. Linear interpolation between contours is permitted.
3. Islands and coastal areas outside the last contour shall use the last wind speed contour of the coastal area.
4. Mountainous terrain, gorges, ocean promontories, and special wind regions shall be examined for unusual wind conditions.
5. Wind speeds correspond to approximately a 7% probability of exceedance in 50 years (Annual Exceedance Probability = 0.00143, MRI = 700 Years).

FIGURE R301.2(5)B
REGIONS WHERE WIND DESIGN IS REQUIRED

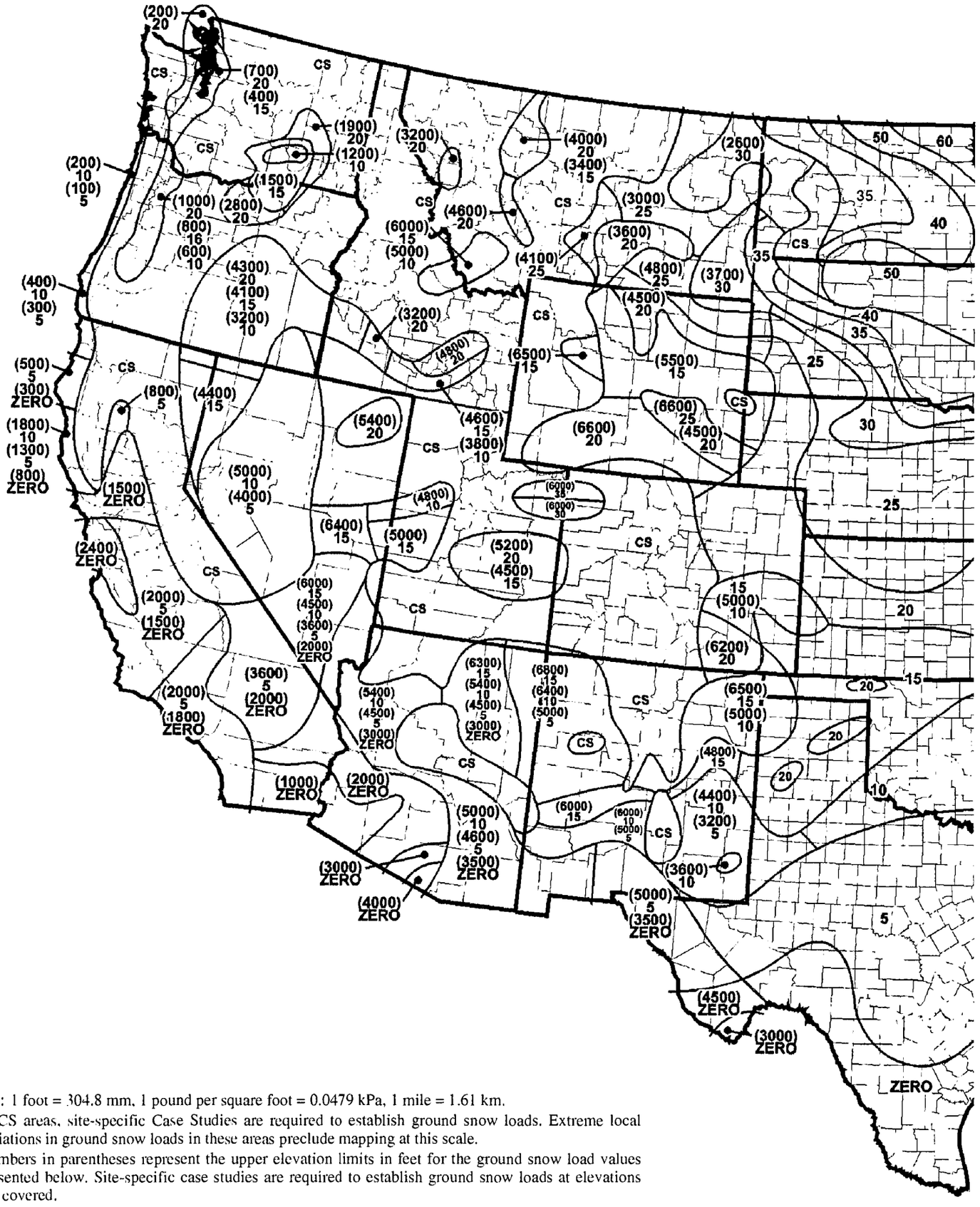

For SI: 1 foot = 304.8 mm, 1 pound per square foot = 0.0479 kPa, 1 mile = 1.61 km.

a. In CS areas, site-specific Case Studies are required to establish ground snow loads. Extreme local variations in ground snow loads in these areas preclude mapping at this scale.

b. Numbers in parentheses represent the upper elevation limits in feet for the ground snow load values presented below. Site-specific case studies are required to establish ground snow loads at elevations not covered.

FIGURE R301.2(6)
GROUND SNOW LOADS, P_g, FOR THE UNITED STATES (lb/ft^2)

(continued)

FIGURE R301.2(6)—continued
GROUND SNOW LOADS, P_g, FOR THE UNITED STATES (lb/ft^2)

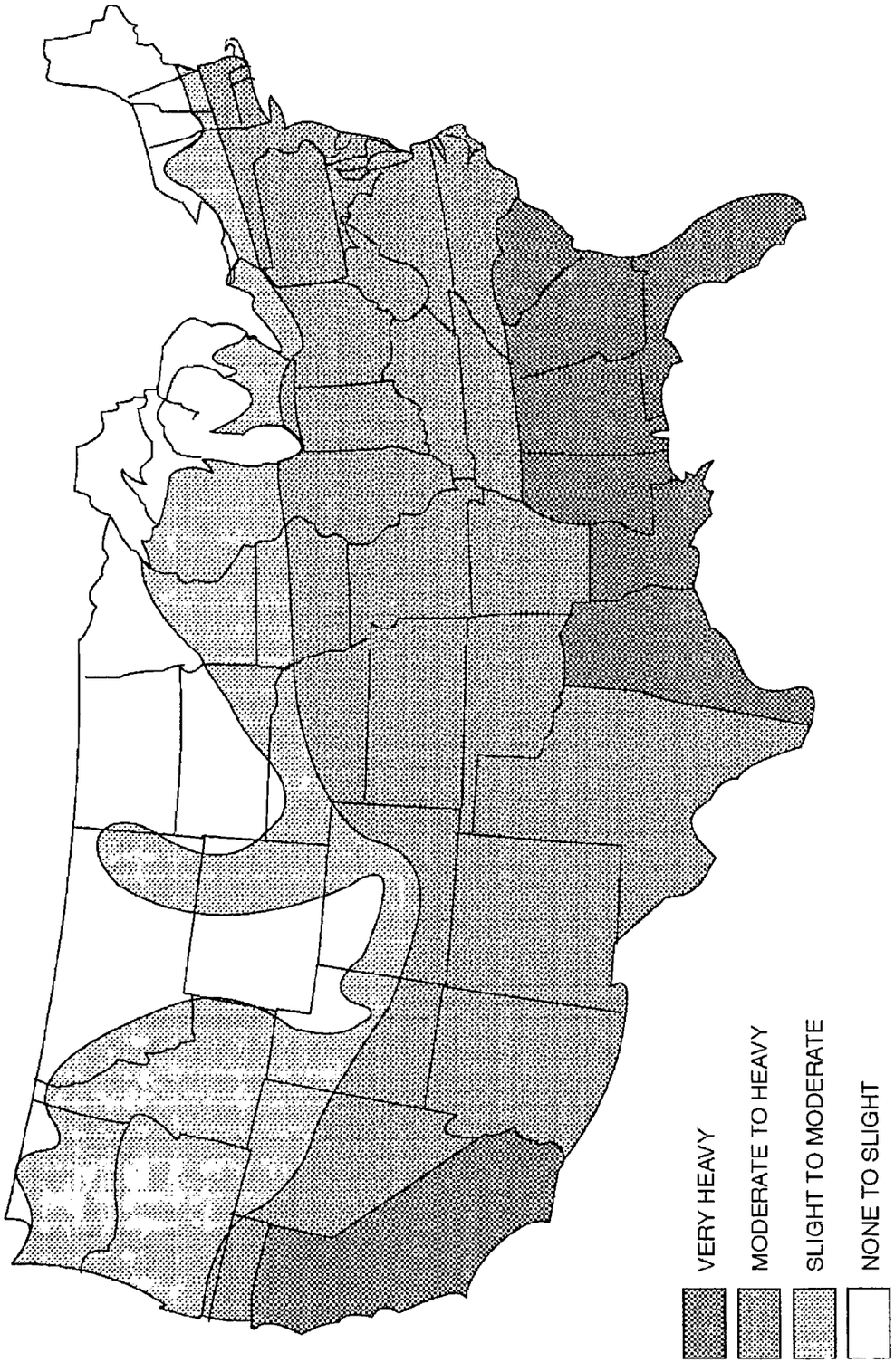

Note: Lines defining areas are approximate only. Local conditions may be more or less severe than indicated by the region classification.

FIGURE R301.2(7)
TERMITE INFESTATION PROBABILITY MAP

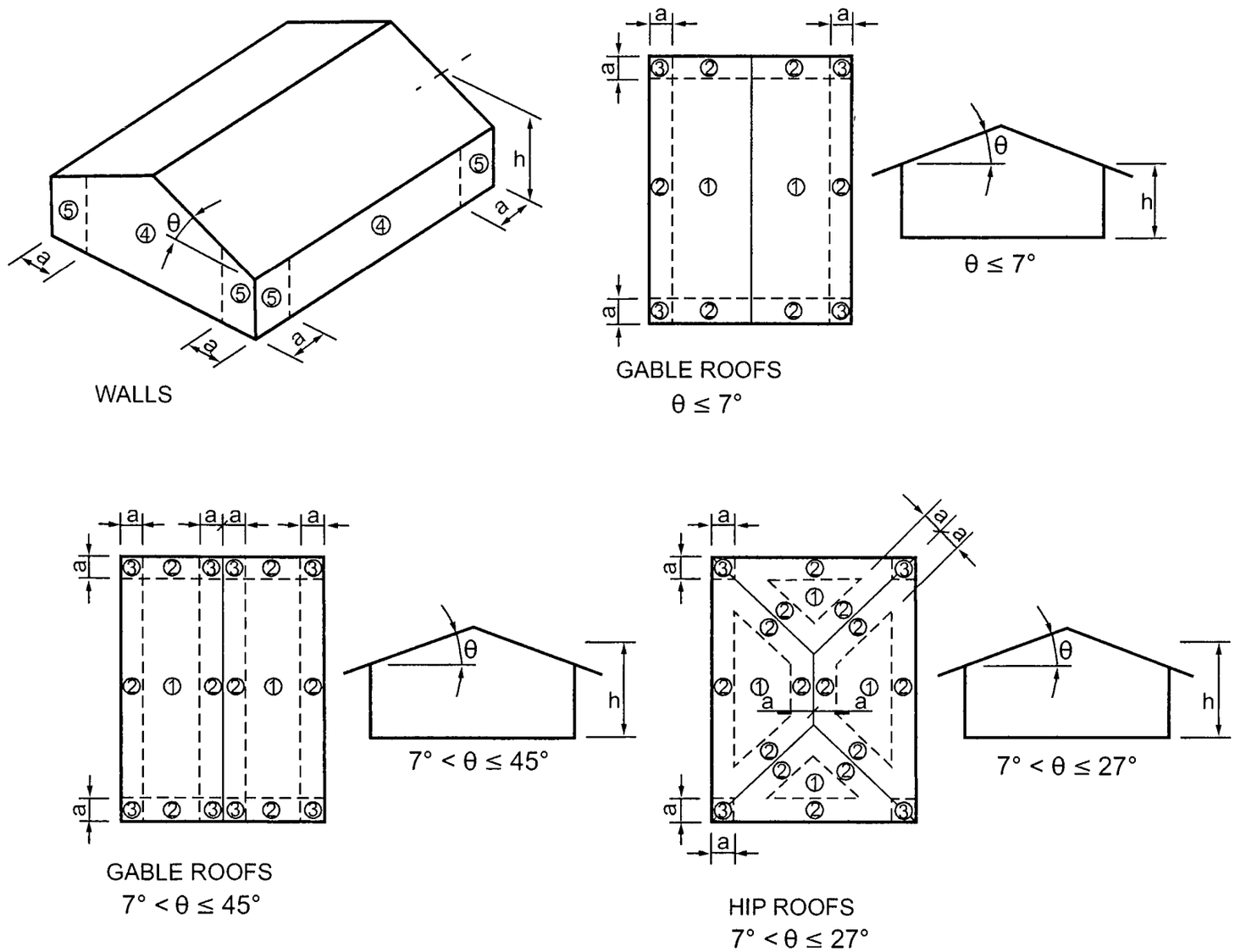

For SI: 1 foot = 304.8 mm, 1 degree = 0.0175 rad.
Note: a = 4 feet in all cases.

FIGURE R301.2(8)
COMPONENT AND CLADDING PRESSURE ZONES

TABLE R301.2.1.3
WIND SPEED CONVERSIONS[a]

V_{ult}	110	115	120	130	140	150	160	170	180	190	200
V_{asd}	85	89	93	101	108	116	124	132	139	147	155

For SI: 1 mile per hour = 0.447 m/s.
a. Linear interpolation is permitted.

TABLE R301.2.1.5.1
ULTIMATE DESIGN WIND SPEED MODIFICATION FOR TOPOGRAPHIC WIND EFFECT[a, b]

ULTIMATE DESIGN WIND SPEED FROM FIGURE R301.2(5)A (mph)	AVERAGE SLOPE OF THE TOP HALF OF HILL, RIDGE OR ESCARPMENT (percent)						
	0.10	0.125	0.15	0.175	0.20	0.23	0.25
	Required ultimate design wind speed-up, modified for topographic wind speed-up (mph)						
110	132	137	142	147	152	158	162
115	138	143	148	154	159	165	169
120	144	149	155	160	166	172	176
130	156	162	168	174	179	NA	NA
140	168	174	181	NA	NA	NA	NA
150	180	NA	NA	NA	NA	NA	NA

For SI: 1 mile per hour = 0.447 m/s, 1 foot = 304.8 mm.

NA = Not Applicable.

a. Table applies to a feature height of 500 feet or less and dwellings sited a distance equal or greater than half the feature height.

b. Where the ultimate design wind speed as modified by Table R301.2.1.5.1 equals or exceeds 140 miles per hour, the building shall be considered as "wind design required" in accordance with Section R301.2.1.1.

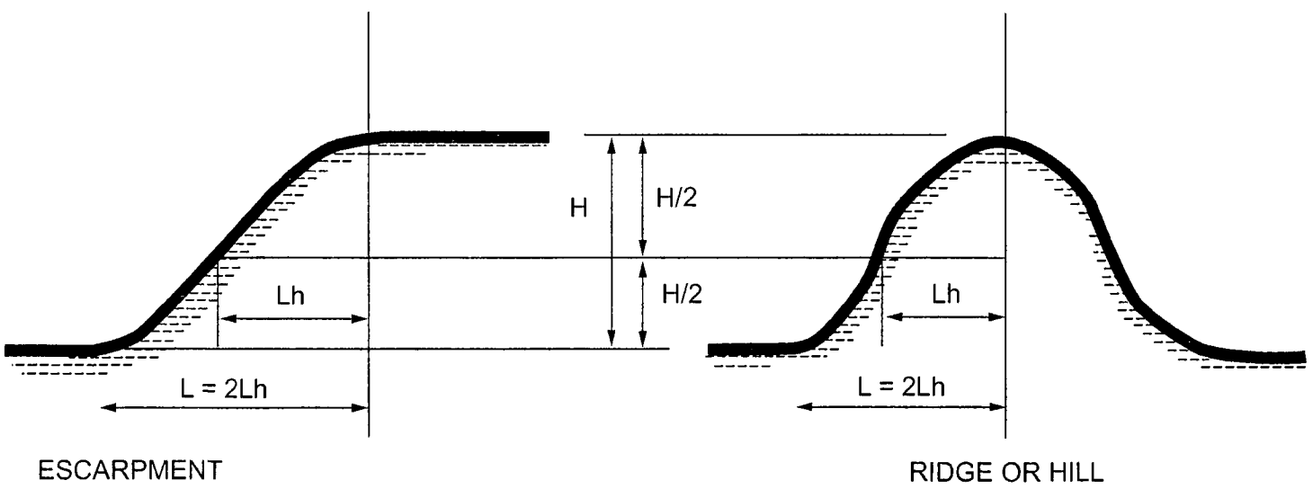

Note: H/2 determines the measurement point for Lh. L is twice Lh.

FIGURE R301.2.1.5.1(1)
TOPOGRAPHIC FEATURES FOR WIND SPEED-UP EFFECT

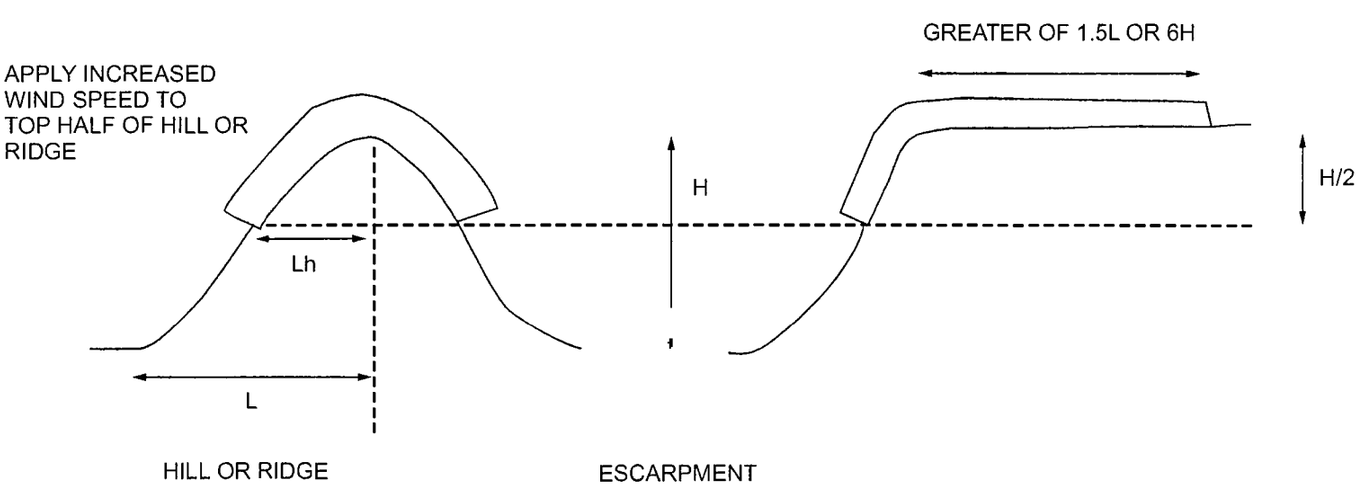

FIGURE R301.2.1.5.1(2)
ILLUSTRATION OF WHERE ON A TOPOGRAPHIC FEATURE, WIND SPEED INCREASE IS APPLIED

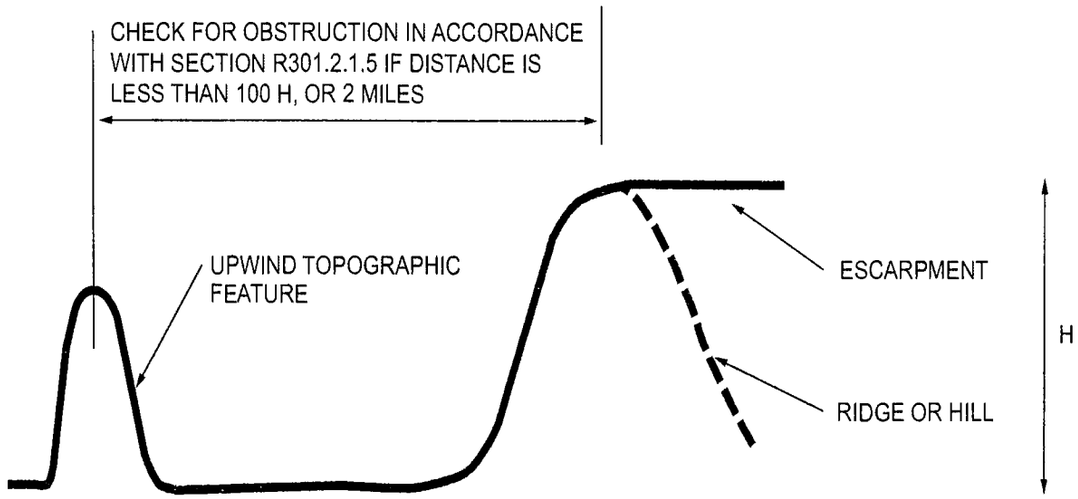

FIGURE R301.2.1.5.1(3)
UPWIND OBSTRUCTION

R301.2.2.2 Weights of materials. Average dead loads shall not exceed 15 pounds per square foot (720 Pa) for the combined roof and ceiling assemblies (on a horizontal projection) or 10 pounds per square foot (480 Pa) for floor assemblies, except as further limited by Section R301.2.2. Dead loads for walls above grade shall not exceed:

1. Fifteen pounds per square foot (720 Pa) for exterior light-frame wood walls.
2. Fourteen pounds per square foot (670 Pa) for exterior light-frame cold-formed steel walls.
3. Ten pounds per square foot (480 Pa) for interior light-frame wood walls.
4. Five pounds per square foot (240 Pa) for interior light-frame cold-formed steel walls.
5. Eighty pounds per square foot (3830 Pa) for 8-inch-thick (203 mm) masonry walls.
6. Eighty-five pounds per square foot (4070 Pa) for 6-inch-thick (152 mm) concrete walls.
7. Ten pounds per square foot (480 Pa) for SIP walls.

Exceptions:

1. Roof and ceiling dead loads not exceeding 25 pounds per square foot (1190 Pa) shall be permitted provided that the wall bracing amounts in Section R602.10.3 are increased in accordance with Table R602.10.3(4).
2. Light-frame walls with stone or masonry veneer shall be permitted in accordance with the provisions of Sections R702.1 and R703.
3. Fireplaces and chimneys shall be permitted in accordance with Chapter 10.

R301.2.2.3 Stone and masonry veneer. Anchored stone and masonry veneer shall comply with the requirements of Sections R702.1 and R703.

R301.2.2.4 Masonry construction. Masonry construction in Seismic Design Categories D_0 and D_1 shall comply with the requirements of Section R606.12.1. Masonry construction in Seismic Design Category D_2 shall comply with the requirements of Section R606.12.4.

R301.2.2.5 Concrete construction. Buildings with exterior above-grade concrete walls shall comply with PCA 100 or shall be designed in accordance with ACI 318.

Exception: Detached one- and two-family dwellings in Seismic Design Category C with exterior above-grade concrete walls are allowed to comply with the requirements of Section R608.

R301.2.2.6 Irregular buildings. The seismic provisions of this code shall not be used for structures, or portions thereof, located in Seismic Design Categories C, D_0, D_1 and D_2 and considered to be irregular in accordance with this section. A building or portion of a building shall be considered to be irregular where one or more of the conditions defined in Items 1 through 7 occur. Irregular structures, or irregular portions of structures, shall be designed in accordance with accepted engineering practice to the extent the irregular features affect the performance of the remaining structural system. Where the forces associated with the irregularity are resisted by a structural system designed in accordance with accepted engineering practice, the remainder of the building shall be permitted to be designed using the provisions of this code.

1. **Shear wall or braced wall offsets out of plane.** Conditions where exterior shear wall lines or braced wall panels are not in one plane vertically from the foundation to the uppermost story in which they are required.

   Exception: For wood light-frame construction, floors with cantilevers or setbacks not exceeding four times the nominal depth of the

wood floor joists are permitted to support braced wall panels that are out of plane with braced wall panels below provided that all of the following are satisfied:

1. Floor joists are nominal 2 inches by 10 inches (51 mm by 254 mm) or larger and spaced not more than 16 inches (406 mm) on center.
2. The ratio of the back span to the cantilever is not less than 2 to 1.
3. Floor joists at ends of braced wall panels are doubled.
4. For wood-frame construction, a continuous rim joist is connected to ends of cantilever joists. Where spliced, the rim joists shall be spliced using a galvanized metal tie not less than 0.058 inch (1.5 mm) (16 gage) and $1^1/_2$ inches (38 mm) wide fastened with six 16d nails on each side of the splice; or a block of the same size as the rim joist and of sufficient length to fit securely between the joist space at which the splice occurs, fastened with eight 16d nails on each side of the splice.
5. Gravity loads carried at the end of cantilevered joists are limited to uniform wall and roof loads and the reactions from headers having a span of 8 feet (2438 mm) or less.

2. **Lateral support of roofs and floors.** Conditions where a section of floor or roof is not laterally supported by shear walls or braced wall lines on all edges.

   Exception: Portions of floors that do not support shear walls, braced wall panels above, or roofs shall be permitted to extend not more than 6 feet (1829 mm) beyond a shear wall or braced wall line.

3. **Shear wall or braced wall offsets in plane.** Conditions where the end of a braced wall panel occurs over an opening in the wall below and extends more than 1 foot (305 mm) horizontally past the edge of the opening. This provision is applicable to shear walls and braced wall panels offset in plane and to braced wall panels offset out of plane in accordance with the exception to Item 1.

   Exception: For wood light-frame wall construction, one end of a braced wall panel shall be permitted to extend more than 1 foot (305 mm) over an opening not more than 8 feet (2438 mm) in width in the wall below provided that the opening includes a header in accordance with all of the following:

   1. The building width, loading condition and framing member species limitations of Table R602.7(1) shall apply.
   2. The header is composed of:
      2.1. Not less than one 2 × 12 or two 2 × 10 for an opening not more than 4 feet (1219 mm) wide.
      2.2. Not less than two 2 × 12 or three 2 × 10 for an opening not more than 6 feet (1829 mm) in width.
      2.3. Not less than three 2 × 12 or four 2 × 10 for an opening not more than 8 feet (2438 mm) in width.
   3. The entire length of the braced wall panel does not occur over an opening in the wall below.

4. **Floor and roof opening.** Conditions where an opening in a floor or roof exceeds the lesser of 12 feet (3658 mm) or 50 percent of the least floor or roof dimension.
5. **Floor level offset.** Conditions where portions of a floor level are vertically offset.

   Exceptions:

   1. Framing supported directly by continuous foundations at the perimeter of the building.
   2. For wood light-frame construction, floors shall be permitted to be vertically offset where the floor framing is lapped or tied together as required by Section R502.6.1.

6. **Perpendicular shear wall and wall bracing.** Conditions where shear walls and braced wall lines do not occur in two perpendicular directions.
7. **Wall bracing in stories containing masonry or concrete construction.** Conditions where stories above grade plane are partially or completely braced by wood wall framing in accordance with Section R602 or cold-formed steel wall framing in accordance with Section R603 include masonry or concrete construction. Where this irregularity applies, the entire story shall be designed in accordance with accepted engineering practice.

   Exceptions: Fireplaces, chimneys and masonry veneer in accordance with this code.

R301.2.2.7 Height limitations. Wood-framed buildings shall be limited to three stories above grade plane or the limits given in Table R602.10.3(3). Cold-formed steel-framed buildings shall be limited to less than or equal to three stories above grade plane in accordance with AISI S230. Mezzanines as defined in Section R202 that comply with Section R325 shall not be considered as stories. Structural insulated panel buildings shall be limited to two stories above grade plane.

R301.2.2.8 Cold-formed steel framing in Seismic Design Categories D_0, D_1 and D_2. In Seismic Design Categories D_0, D_1 and D_2 in addition to the requirements of this code, cold-formed steel framing shall comply with the requirements of AISI S230.

R301.2.2.9 Masonry chimneys. In Seismic Design Categories D_0, D_1 and D_2, masonry chimneys shall be reinforced and anchored to the building in accordance with Sections R1003.3 and R1003.4.

R301.2.2.10 Anchorage of water heaters. In Seismic Design Categories D_0, D_1 and D_2, water heaters shall be anchored against movement and overturning in accordance with *the California Plumbing Code*.

R301.2.3 Snow loads. Wood-framed construction, cold-formed, steel-framed construction and masonry and concrete construction, and structural insulated panel construction in regions with ground snow loads 70 pounds per square foot (3.35 kPa) or less, shall be in accordance with Chapters 5, 6 and 8. Buildings in regions with ground snow loads greater than 70 pounds per square foot (3.35 kPa) shall be designed in accordance with accepted engineering practice.

R301.2.4 Floodplain construction. Buildings and structures constructed in whole or in part in flood hazard areas (including A or V Zones) as established in Table R301.2(1), and substantial improvement and repair of substantial damage of buildings and structures in flood hazard areas, shall be designed and constructed in accordance with Section R322. Buildings and structures that are located in more than one flood hazard area shall comply with the provisions associated with the most restrictive flood hazard area. Buildings and structures located in whole or in part in identified floodways shall be designed and constructed in accordance with ASCE 24.

R301.2.4.1 Alternative provisions. As an alternative to the requirements in Section R322, ASCE 24 is permitted subject to the limitations of this code and the limitations therein.

R301.3 Story height. The wind and seismic provisions of this code shall apply to buildings with story heights not exceeding the following:

1. For wood wall framing, the story height shall not exceed 11 feet 7 inches (3531 mm) and the laterally unsupported bearing wall stud height permitted by Table R602.3(5).
2. For cold-formed steel wall framing, the story height shall be not more than 11 feet 7 inches (3531 mm) and the unsupported bearing wall stud height shall be not more than 10 feet (3048 mm).
3. For masonry walls, the story height shall be not more than 13 feet 7 inches (4140 mm) and the bearing wall clear height shall be not more than 12 feet (3658 mm).

   Exception: An additional 8 feet (2438 mm) of bearing wall clear height is permitted for gable end walls.
4. For insulating concrete form walls, the maximum story height shall not exceed 11 feet 7 inches (3531 mm) and the maximum unsupported wall height per story as permitted by Section R608 tables shall not exceed 10 feet (3048 mm).
5. For structural insulated panel (SIP) walls, the story height shall be not more than 11 feet 7 inches (3531 mm) and the bearing wall height per story as permitted by Section R610 tables shall not exceed 10 feet (3048 mm).

Individual walls or wall studs shall be permitted to exceed these limits as permitted by Chapter 6 provisions, provided that story heights are not exceeded. An engineered design shall be provided for the wall or wall framing members where the limits of Chapter 6 are exceeded. Where the story height limits of this section are exceeded, the design of the building, or the noncompliant portions thereof, to resist wind and seismic loads shall be in accordance with the *California Building Code*.

R301.4 Dead load. The actual weights of materials and construction shall be used for determining dead load with consideration for the dead load of fixed service equipment.

R301.5 Live load. The minimum uniformly distributed live load shall be as provided in Table R301.5.

TABLE R301.5
MINIMUM UNIFORMLY DISTRIBUTED LIVE LOADS
(in pounds per square foot)

USE	LIVE LOAD
Uninhabitable attics without storage[h]	10
Uninhabitable attics with limited storage[b, g]	20
Habitable attics and attics served with fixed stairs	30
Balconies (exterior) and decks[e]	*60*
Fire escapes	40
Guards and handrails[d]	200[h]
Guard in-fill components[f]	50[h]
Passenger vehicle garages[a]	50[a]
Rooms other than sleeping rooms	40
Sleeping rooms	30
Stairs	40[c]

For SI: 1 pound per square foot = 0.0479 kPa, 1 square inch = 645 mm^2, 1 pound = 4.45 N.

a. Elevated garage floors shall be capable of supporting a 2,000-pound load applied over a 20-square-inch area.

b. Uninhabitable attics without storage are those where the clear height between joists and rafters is not more than 42 inches, or where there are not two or more adjacent trusses with web configurations capable of accommodating an assumed rectangle 42 inches in height by 24 inches in width, or greater, within the plane of the trusses. This live load need not be assumed to act concurrently with any other live load requirements.

c. Individual stair treads shall be designed for the uniformly distributed live load or a 300-pound concentrated load acting over an area of 4 square inches, whichever produces the greater stresses.

d. A single concentrated load applied in any direction at any point along the top.

e. See Section R507.1 for decks attached to exterior walls.

f. Guard in-fill components (all those except the handrail), balusters and panel fillers shall be designed to withstand a horizontally applied normal load of 50 pounds on an area equal to 1 square foot. This load need not be assumed to act concurrently with any other live load requirement.

g. Uninhabitable attics with limited storage are those where the clear height between joists and rafters is 42 inches or greater, or where there are two or more adjacent trusses with web configurations capable of accommodating

an assumed rectangle 42 inches in height by 24 inches in width, or greater, within the plane of the trusses.

The live load need only be applied to those portions of the joists or truss bottom chords where all of the following conditions are met:

1. The attic area is accessed from an opening not less than 20 inches in width by 30 inches in length that is located where the clear height in the attic is not less than 30 inches.
2. The slopes of the joists or truss bottom chords are not greater than 2 inches vertical to 12 units horizontal.
3. Required insulation depth is less than the joist or truss bottom chord member depth.

The remaining portions of the joists or truss bottom chords shall be designed for a uniformly distributed concurrent live load of not less than 10 pounds per square foot.

h. Glazing used in handrail assemblies and guards shall be designed with a safety factor of 4. The safety factor shall be applied to each of the concentrated loads applied to the top of the rail, and to the load on the in-fill components. These loads shall be determined independent of one another, and loads are assumed not to occur with any other live load.

R301.6 Roof load. The roof shall be designed for the live load indicated in Table R301.6 or the snow load indicated in Table R301.2(1), whichever is greater.

TABLE R301.6
MINIMUM ROOF LIVE LOADS IN POUNDS-FORCE PER SQUARE FOOT OF HORIZONTAL PROJECTION

ROOF SLOPE	TRIBUTARY LOADED AREA IN SQUARE FEET FOR ANY STRUCTURAL MEMBER		
	0 to 200	201 to 600	Over 600
Flat or rise less than 4 inches per foot (1:3)	20	16	12
Rise 4 inches per foot (1:3) to less than 12 inches per foot (1:1)	16	14	12
Rise 12 inches per foot (1:1) and greater	12	12	12

For SI: 1 square foot = 0.0929 m^2, 1 pound per square foot = 0.0479 kPa, 1 inch per foot = 83.3 mm/m.

R301.7 Deflection. The allowable deflection of any structural member under the live load listed in Sections R301.5 and R301.6 or wind loads determined by Section R301.2.1 shall not exceed the values in Table R301.7.

R301.8 Nominal sizes. For the purposes of this code, dimensions of lumber specified shall be deemed to be nominal dimensions unless specifically designated as actual dimensions.

SECTION R302
FIRE-RESISTANT CONSTRUCTION

R302.1 Exterior walls. Construction, projections, openings and penetrations of exterior walls of dwellings and accessory buildings shall comply with Table R302.1(1); or dwellings *and accessory buildings* equipped throughout with an automatic sprinkler system installed in accordance with Section *R313* shall comply with Table R302.1(2).

Exceptions:

1. Walls, projections, openings or penetrations in walls perpendicular to the line used to determine the fire separation distance.
2. Walls of individual dwelling units and their accessory structures located on the same lot.
3. Detached tool sheds and storage sheds, playhouses and similar structures exempted from permits are not required to provide wall protection based on location on the lot. Projections beyond the exterior wall shall not extend over the lot line.
4. Detached garages accessory to a dwelling located within 2 feet (610 mm) of a lot line are permitted to have roof eave projections not exceeding 4 inches (102 mm).
5. Foundation vents installed in compliance with this code are permitted.

R302.2 Townhouses. Walls separating townhouse units shall be constructed in accordance with Section R302.2.1 or R302.2.2.

R302.2.1 Double walls. Each townhouse shall be separated by two 1-hour fire-resistance-rated wall assemblies tested in accordance with ASTM E119, UL 263 or Section 703.3 of the *California Building Code.*

R302.2.2 Common walls. Common walls separating townhouses shall be assigned a fire-resistance rating in accordance with Item 1 or 2. The common wall shared by two townhouses shall be constructed without plumbing or

TABLE R301.7
ALLOWABLE DEFLECTION OF STRUCTURAL MEMBERS[b, c]

STRUCTURAL MEMBER	ALLOWABLE DEFLECTION
Rafters having slopes greater than 3:12 with finished ceiling not attached to rafters	*L*/180
Interior walls and partitions	*H*/180
Floors	*L*/360
Ceilings with brittle finishes (including plaster and stucco)	*L*/360
Ceilings with flexible finishes (including gypsum board)	*L*/240
All other structural members	*L*/240
Exterior walls—wind loads[a] with plaster or stucco finish	*H*/360
Exterior walls—wind loads[a] with other brittle finishes	*H*/240
Exterior walls—wind loads[a] with flexible finishes	*H*/120[d]
Lintels supporting masonry veneer walls[e]	*L*/600

Note: *L* = span length, *H* = span height.

a. For the purpose of the determining deflection limits herein, the wind load shall be permitted to be taken as 0.7 times the component and cladding (ASD) loads obtained from Table R301.2(2).

b For cantilever members, *L* shall be taken as twice the length of the cantilever.

c. For aluminum structural members or panels used in roofs or walls of sunroom additions or patio covers, not supporting edge of glass or sandwich panels, the total load deflection shall not exceed *L*/60. For continuous aluminum structural members supporting edge of glass, the total load deflection shall not exceed *L*/175 for each glass lite or *L*/60 for the entire length of the member, whichever is more stringent. For sandwich panels used in roofs or walls of sunroom additions or patio covers, the total load deflection shall not exceed *L*/120.

d. Deflection for exterior walls with interior gypsum board finish shall be limited to an allowable deflection of *H*/180.

e. Refer to Section R703.8.2.

mechanical equipment, ducts or vents in the cavity of the common wall. The wall shall be rated for fire exposure from both sides and shall extend to and be tight against exterior walls and the underside of the roof sheathing. Electrical installations shall be in accordance with *the California Electrical Code*. Penetrations of the membrane of common walls for electrical outlet boxes shall be in accordance with Section R302.4.

1. Where a fire sprinkler system in accordance with Section *R313* is provided, the common wall shall be not less than a 1-hour fire-resistance-rated wall assembly tested in accordance with ASTM E119, UL 263 or Section 703.3 of the *California Building Code*.
2. Where a fire sprinkler system in accordance with Section *R313* is not provided, the common wall shall

TABLE R302.1(1)
EXTERIOR WALLS

EXTERIOR WALL ELEMENT		MINIMUM FIRE-RESISTANCE RATING	MINIMUM FIRE SEPARATION DISTANCE
Walls	Fire-resistance rated	1 hour—tested in accordance with ASTM E119, UL 263 or Section 703.3 of the *California Building Code* with exposure from both sides	0 feet
	Not fire-resistance rated	0 hours	≥ 5 feet
Projections	Not allowed	NA	< 2 feet
	Fire-resistance rated	1 hour on the underside, or heavy timber, or fire-retardant-treated wood[a, b]	≥ 2 feet to < 5 feet
	Not fire-resistance rated	0 hours	≥ 5 feet
Openings in walls	Not allowed	NA	< 3 feet
	25% maximum of wall area	0 hours	3 feet
	Unlimited	0 hours	5 feet
Penetrations	All	Comply with Section R302.4	< 3 feet
		None required	3 feet

For SI: 1 foot = 304.8 mm.
NA = Not Applicable.
a. The fire-resistance rating shall be permitted to be reduced to 0 hours on the underside of the eave overhang if fireblocking is provided from the wall top plate to the underside of the roof sheathing.
b. The fire-resistance rating shall be permitted to be reduced to 0 hours on the underside of the rake overhang where gable vent openings are not installed.

TABLE R302.1(2)
EXTERIOR WALLS—DWELLINGS *AND ACCESSORY BUILDINGS WITH AUTOMATIC RESIDENTIAL FIRE SPRINKLER PROTECTION*

EXTERIOR WALL ELEMENT		MINIMUM FIRE-RESISTANCE RATING	MINIMUM FIRE SEPARATION DISTANCE
Walls	Fire-resistance rated	1 hour—tested in accordance with ASTM E119, UL 263 or Section 703.3 of the *California Building Code* with exposure from the outside	0 feet
	Not fire-resistance rated	0 hours	3 feet[a]
Projections	Not allowed	NA	< 2 feet
	Fire-resistance rated	1 hour on the underside, or heavy timber, or fire-retardant-treated wood[b, c]	2 feet[a]
	Not fire-resistance rated	0 hours	3 feet
Openings in walls	Not allowed	NA	< 3 feet
	Unlimited	0 hours	3 feet[a]
Penetrations	All	Comply with Section R302.4	< 3 feet
		None required	3 feet[a]

For SI: 1 foot = 304.8 mm.
NA = Not Applicable.
a. For residential subdivisions where all dwellings are equipped throughout with an automatic sprinkler system installed in accordance with Section *R313*, the fire separation distance for exterior walls not fire-resistance rated and for fire-resistance-rated projections shall be permitted to be reduced to 0 feet, and unlimited unprotected openings and penetrations shall be permitted, where the adjoining lot provides an open setback yard that is 6 feet or more in width on the opposite side of the property line.
b. The fire-resistance rating shall be permitted to be reduced to 0 hours on the underside of the eave overhang if fireblocking is provided from the wall top plate to the underside of the roof sheathing.
c. The fire-resistance rating shall be permitted to be reduced to 0 hours on the underside of the rake overhang where gable vent openings are not installed.

be not less than a 2-hour fire-resistance-rated wall assembly tested in accordance with ASTM E119, UL 263 or Section 703.3 of the *California Building Code.*

R302.2.3 Continuity. The fire-resistance-rated wall or assembly separating townhouses shall be continuous from the foundation to the underside of the roof sheathing, deck or slab. The fire-resistance rating shall extend the full length of the wall or assembly, including wall extensions through and separating attached enclosed accessory structures.

R302.2.4 Parapets for townhouses. Parapets constructed in accordance with Section R302.2.5 shall be constructed for townhouses as an extension of exterior walls or common walls in accordance with the following:

1. Where roof surfaces adjacent to the wall or walls are at the same elevation, the parapet shall extend not less than 30 inches (762 mm) above the roof surfaces.
2. Where roof surfaces adjacent to the wall or walls are at different elevations and the higher roof is not more than 30 inches (762 mm) above the lower roof, the parapet shall extend not less than 30 inches (762 mm) above the lower roof surface.

   Exception: A parapet is not required in the preceding two cases where the roof covering complies with a minimum Class C rating as tested in accordance with ASTM E108 or UL 790 and the roof decking or sheathing is of noncombustible materials or fire-retardant-treated wood for a distance of 4 feet (1219 mm) on each side of the wall or walls, or one layer of $^5/_8$-inch (15.9 mm) Type X gypsum board is installed directly beneath the roof decking or sheathing, supported by not less than nominal 2-inch (51 mm) ledgers attached to the sides of the roof framing members, for a distance of not less than 4 feet (1219 mm) on each side of the wall or walls and any openings or penetrations in the roof are not within 4 feet (1219 mm) of the common walls. Fire-retardant-treated wood shall meet the requirements of Sections R802.1.5 and R803.2.1.2.
3. A parapet is not required where roof surfaces adjacent to the wall or walls are at different elevations and the higher roof is more than 30 inches (762 mm) above the lower roof. The common wall construction from the lower roof to the underside of the higher roof deck shall have not less than a 1-hour fire-resistance rating. The wall shall be rated for exposure from both sides.

R302.2.5 Parapet construction. Parapets shall have the same fire-resistance rating as that required for the supporting wall or walls. On any side adjacent to a roof surface, the parapet shall have noncombustible faces for the uppermost 18 inches (457 mm), to include counterflashing and coping materials. Where the roof slopes toward a parapet at slopes greater than 2 units vertical in 12 units horizontal (16.7-percent slope), the parapet shall extend to the same height as any portion of the roof within a distance of 3 feet (914 mm), and the height shall be not less than 30 inches (762 mm).

R302.2.6 Structural independence. Each individual townhouse shall be structurally independent.

Exceptions:

1. Foundations supporting exterior walls or common walls.
2. Structural roof and wall sheathing from each unit fastened to the common wall framing.
3. Nonstructural wall and roof coverings.
4. Flashing at termination of roof covering over common wall.
5. Townhouses separated by a common wall as provided in Section R302.2.2, Item 1 or 2.

R302.3 Two-family dwellings. Dwelling units in two-family dwellings shall be separated from each other by wall and floor assemblies having not less than a 1-hour fire-resistance rating where tested in accordance with ASTM E119, UL 263 or Section 703.3 of the *California Building Code.* Fire-resistance-rated floor/ceiling and wall assemblies shall extend to and be tight against the exterior wall, and wall assemblies shall extend from the foundation to the underside of the roof sheathing.

Exceptions:

1. A fire-resistance rating of $^1/_2$ hour shall be permitted in buildings equipped throughout with an automatic sprinkler system installed in accordance with NFPA 13.
2. Wall assemblies need not extend through attic spaces where the ceiling is protected by not less than $^5/_8$-inch (15.9 mm) Type X gypsum board, an attic draft stop constructed as specified in Section R302.12.1 is provided above and along the wall assembly separating the dwellings and the structural framing supporting the ceiling is protected by not less than $^1/_2$-inch (12.7 mm) gypsum board or equivalent.

R302.3.1 Supporting construction. Where floor assemblies are required to be fire-resistance rated by Section R302.3, the supporting construction of such assemblies shall have an equal or greater fire-resistance rating.

R302.4 Dwelling unit rated penetrations. Penetrations of wall or floor-ceiling assemblies required to be fire-resistance rated in accordance with Section R302.2 or R302.3 shall be protected in accordance with this section.

R302.4.1 Through penetrations. Through penetrations of fire-resistance-rated wall or floor assemblies shall comply with Section R302.4.1.1 or R302.4.1.2.

Exception: Where the penetrating items are steel, ferrous or copper pipes, tubes or conduits, the annular space shall be protected as follows:

1. In concrete or masonry wall or floor assemblies, concrete, grout or mortar shall be permitted where installed to the full thickness of the wall or

floor assembly or the thickness required to maintain the fire-resistance rating, provided that both of the following are complied with:

1.1. The nominal diameter of the penetrating item is not more than 6 inches (152 mm).

1.2. The area of the opening through the wall does not exceed 144 square inches (92 900 mm^2).

2. The material used to fill the annular space shall prevent the passage of flame and hot gases sufficient to ignite cotton waste where subjected to ASTM E119 or UL 263 time temperature fire conditions under a positive pressure differential of not less than 0.01 inch of water (3 Pa) at the location of the penetration for the time period equivalent to the fire-resistance rating of the construction penetrated.

R302.4.1.1 Fire-resistance-rated assembly. Penetrations shall be installed as tested in the approved fire-resistance-rated assembly.

R302.4.1.2 Penetration firestop system. Penetrations shall be protected by an approved penetration firestop system installed as tested in accordance with ASTM E814 or UL 1479, with a positive pressure differential of not less than 0.01 inch of water (3 Pa) and shall have an F rating of not less than the required fire-resistance rating of the wall or floor-ceiling assembly penetrated.

R302.4.2 Membrane penetrations. Membrane penetrations shall comply with Section R302.4.1. Where walls are required to have a fire-resistance rating, recessed fixtures shall be installed so that the required fire-resistance rating will not be reduced.

Exceptions:

1. Membrane penetrations of not more than 2-hour fire-resistance-rated walls and partitions by steel electrical boxes that do not exceed 16 square inches (0.0103 m^2) in area provided that the aggregate area of the openings through the membrane does not exceed 100 square inches (0.0645 m^2) in any 100 square feet (9.29 m^2) of wall area. The annular space between the wall membrane and the box shall not exceed $^1/_8$ inch (3.1 mm). Such boxes on opposite sides of the wall shall be separated by one of the following:

1.1. By a horizontal distance of not less than 24 inches (610 mm) where the wall or partition is constructed with individual noncommunicating stud cavities.

1.2. By a horizontal distance of not less than the depth of the wall cavity where the wall cavity is filled with cellulose loose-fill, rockwool or slag mineral wool insulation.

1.3. By solid fireblocking in accordance with Section R302.11.

1.4. By protecting both boxes with listed putty pads.

1.5. By other listed materials and methods.

2. Membrane penetrations by listed electrical boxes of any materials provided that the boxes have been tested for use in fire-resistance-rated assemblies and are installed in accordance with the instructions included in the listing. The annular space between the wall membrane and the box shall not exceed $^1/_8$ inch (3.1 mm) unless listed otherwise. Such boxes on opposite sides of the wall shall be separated by one of the following:

2.1. By the horizontal distance specified in the listing of the electrical boxes.

2.2. By solid fireblocking in accordance with Section R302.11.

2.3. By protecting both boxes with listed putty pads.

2.4. By other listed materials and methods.

3. The annular space created by the penetration of a fire sprinkler provided that it is covered by a metal escutcheon plate.

4. Ceiling membrane penetrations by listed luminaires or by luminaires protected with listed materials that have been tested for use in fire-resistance-rated assemblies and are installed in accordance with the instructions included in the listing.

R302.5 Dwelling-garage opening and penetration protection. Openings and penetrations through the walls or ceilings separating the dwelling from the garage shall be in accordance with Sections R302.5.1 through R302.5.3.

R302.5.1 Opening protection. Openings from a private garage directly into a room used for sleeping purposes shall not be permitted. Other openings between the garage and residence shall be equipped with solid wood doors not less than $1^3/_8$ inches (35 mm) in thickness, solid or honeycomb-core steel doors not less than $1^3/_8$ inches (35 mm) thick, or 20-minute fire-rated doors, equipped with self-closing *or automatic-closing and self-latching* device.

Exception: *Where the residence and the private garage are protected by an automatic residential fire sprinkler system in accordance with Sections R309.6 and R313, other door openings between the private garage and the residence need only be self-closing and self-latching. This exception shall not apply to rooms used for sleeping purposes.*

R302.5.2 Duct penetration. Ducts in the garage and ducts penetrating the walls or ceilings separating the dwelling from the garage shall be constructed of a minimum No. 26 gage (0.48 mm) sheet steel or other approved material and shall not have openings into the garage.

R302.5.3 Other penetrations. Penetrations through the separation required in Section R302.6 shall be protected as required by Section R302.11, Item 4.

R302.6 Dwelling/garage *and/or carport* fire separation. The garage *and/or carport* shall be separated as required by Table R302.6. Openings in garage walls shall comply with Section R302.5. Attachment of gypsum board shall comply with Table R702.3.5. The wall separation provisions of Table R302.6 shall not apply to garage walls that are perpendicular to the adjacent dwelling unit wall. *A separation is not required between the dwelling unit and a carport, provided the carport is entirely open on two or more sides and there are not enclosed areas above.*

R302.7 Under-stair protection. Enclosed space under stairs that is accessed by a door or access panel shall have walls, under-stair surface and any soffits protected on the enclosed side with $^1/_2$-inch (12.7 mm) gypsum board.

R302.8 Foam plastics. For requirements for foam plastics, see Section R316.

R302.9 Flame spread index and smoke-developed index for wall and ceiling finishes. Flame spread and smoke-developed indices for wall and ceiling finishes shall be in accordance with Sections R302.9.1 through R302.9.4.

R302.9.1 Flame spread index. Wall and ceiling finishes shall have a flame spread index of not greater than 200.

Exception: Flame spread index requirements for finishes shall not apply to trim defined as picture molds, chair rails, baseboards and handrails; to doors and windows or their frames; or to materials that are less than $^1/_{28}$ inch (0.91 mm) in thickness cemented to the surface of walls or ceilings if these materials exhibit flame spread index values not greater than those of paper of this thickness cemented to a noncombustible backing.

R302.9.2 Smoke-developed index. Wall and ceiling finishes shall have a smoke-developed index of not greater than 450.

R302.9.3 Testing. Tests shall be made in accordance with ASTM E84 or UL 723.

R302.9.4 Alternative test method. As an alternative to having a flame spread index of not greater than 200 and a smoke-developed index of not greater than 450 where tested in accordance with ASTM E84 or UL 723, wall and ceiling finishes shall be permitted to be tested in accordance with NFPA 286. Materials tested in accordance with NFPA 286 shall meet the following criteria:

The interior finish shall comply with the following:

1. During the 40 kW exposure, flames shall not spread to the ceiling.
2. The flame shall not spread to the outer extremity of the sample on any wall or ceiling.
3. Flashover, as defined in NFPA 286, shall not occur.
4. The peak heat release rate throughout the test shall not exceed 800 kW.
5. The total smoke released throughout the test shall not exceed 1,000 m^2.

R302.9.5 Stability. *Interior finish materials regulated by this chapter shall be applied or otherwise fastened in such a manner that such materials will not readily become detached where subjected to room temperatures of 200°F (93°C) for not less than 30 minutes.*

R302.10 Flame spread index and smoke-developed index for insulation. Flame spread and smoke-developed index for insulation shall be in accordance with Sections R302.10.1 through R302.10.5.

R302.10.1 Insulation. Insulating materials installed within floor-ceiling assemblies, roof-ceiling assemblies, wall assemblies, crawl spaces and attics shall comply with the requirements of this section. They shall exhibit a flame spread index not to exceed 25 and a smoke-developed index not to exceed 450 where tested in accordance with ASTM E84 or UL 723. Insulating materials, where tested in accordance with the requirements of this section, shall include facings, where used, such as vapor retarders, vapor permeable membranes and similar coverings.

Exceptions:

1. Where such materials are installed in concealed spaces, the flame spread index and smoke-developed index limitations do not apply to the facings, provided that the facing is installed in substantial contact with the unexposed surface of the ceiling, floor or wall finish.
2. Cellulose fiber loose-fill insulation that is not spray applied and that complies with the requirements of Section R302.10.3 shall not be required to meet the flame spread index requirements but shall be required to meet a smoke-developed

TABLE R302.6
DWELLING-GARAGE *AND/OR CARPORT* SEPARATION

SEPARATION	MATERIAL
From the residence and attics	Not less than $^1/_2$-inch gypsum board or equivalent applied to the garage side
From habitable rooms above the garage or carport	Not less than $^5/_8$-inch Type X gypsum board or equivalent
Structure(s) supporting floor/ceiling assemblies used for separation required by this section	Not less than $^1/_2$-inch gypsum board or equivalent
Garages located less than 3 feet from a dwelling unit on the same lot	Not less than $^1/_2$-inch gypsum board or equivalent applied to the interior side of exterior walls that are within this area

For SI: 1 inch = 25.4 mm, 1 foot = 304.8 mm.

index of not more than 450 where tested in accordance with CAN/ULC S102.2.

3. Foam plastic insulation shall comply with Section R316.

R302.10.2 Loose-fill insulation. Loose-fill insulation materials that cannot be mounted in the ASTM E84 or UL 723 apparatus without a screen or artificial supports shall comply with the flame spread and smoke-developed limits of Section R302.10.1 where tested in accordance with CAN/ULC S102.2.

Exception: Cellulosic fiber loose-fill insulation shall not be required to be tested in accordance with CAN/ULC S102.2, provided that such insulation complies with the requirements of Sections R302.10.1 and R302.10.3.

R302.10.3 Cellulosic fiber loose-fill insulation. Cellulosic fiber loose-fill insulation shall comply with CPSC 16 CFR, Parts 1209 and 1404. Each package of such insulating material shall be clearly labeled in accordance with CPSC 16 CFR, Parts 1209 and 1404.

R302.10.4 Exposed attic insulation. Exposed insulation materials installed on attic floors shall have a critical radiant flux of not less than 0.12 watt per square centimeter.

R302.10.5 Testing. Tests for critical radiant flux shall be made in accordance with ASTM E970.

R302.11 Fireblocking. In combustible construction, fireblocking shall be provided to cut off both vertical and horizontal concealed draft openings and to form an effective fire barrier between stories, and between a top story and the roof space.

Fireblocking shall be provided in wood-framed construction in the following locations:

1. In concealed spaces of stud walls and partitions, including furred spaces and parallel rows of studs or staggered studs, as follows:
   1.1. Vertically at the ceiling and floor levels.
   1.2. Horizontally at intervals not exceeding 10 feet (3048 mm).
2. At interconnections between concealed vertical and horizontal spaces such as occur at soffits, drop ceilings and cove ceilings.
3. In concealed spaces between stair stringers at the top and bottom of the run. Enclosed spaces under stairs shall comply with Section R302.7.
4. At openings around vents, pipes, ducts, cables and wires at ceiling and floor level, with an approved material to resist the free passage of flame and products of combustion. The material filling this annular space shall not be required to meet the ASTM E136 requirements.
5. For the fireblocking of chimneys and fireplaces, see Section R1003.19.
6. Fireblocking of cornices of a two-family dwelling is required at the line of dwelling unit separation.

R302.11.1 Fireblocking materials. Except as provided in Section R302.11, Item 4, fireblocking shall consist of the following materials.

1. Two-inch (51 mm) nominal lumber.
2. Two thicknesses of 1-inch (25.4 mm) nominal lumber with broken lap joints.
3. One thickness of $^{23}/_{32}$-inch (18.3 mm) wood structural panels with joints backed by $^{23}/_{32}$-inch (18.3 mm) wood structural panels.
4. One thickness of $^{3}/_{4}$-inch (19.1 mm) particleboard with joints backed by $^{3}/_{4}$-inch (19.1 mm) particleboard.
5. One-half-inch (12.7 mm) gypsum board.
6. One-quarter-inch (6.4 mm) cement-based millboard.
7. Batts or blankets of mineral wool or glass fiber or other approved materials installed in such a manner as to be securely retained in place.
8. Cellulose insulation installed as tested in accordance with ASTM E119 or UL 263, for the specific application.

R302.11.1.1 Batts or blankets of mineral or glass fiber. Batts or blankets of mineral or glass fiber or other approved nonrigid materials shall be permitted for compliance with the 10-foot (3048 mm) horizontal fireblocking in walls constructed using parallel rows of studs or staggered studs.

R302.11.1.2 Unfaced fiberglass. Unfaced fiberglass batt insulation used as fireblocking shall fill the entire cross section of the wall cavity to a height of not less than 16 inches (406 mm) measured vertically. Where piping, conduit or similar obstructions are encountered, the insulation shall be packed tightly around the obstruction.

R302.11.1.3 Loose-fill insulation material. Loose-fill insulation material shall not be used as a fireblock unless specifically tested in the form and manner intended for use to demonstrate its ability to remain in place and to retard the spread of fire and hot gases.

R302.11.2 Fireblocking integrity. The integrity of fireblocks shall be maintained.

R302.12 Draftstopping. In combustible construction where there is usable space both above and below the concealed space of a floor-ceiling assembly, draftstops shall be installed so that the area of the concealed space does not exceed 1,000 square feet (92.9 m^2). Draftstopping shall divide the concealed space into approximately equal areas. Where the assembly is enclosed by a floor membrane above and a ceiling membrane below, draftstopping shall be provided in floor-ceiling assemblies under the following circumstances:

1. Ceiling is suspended under the floor framing.
2. Floor framing is constructed of truss-type open-web or perforated members.

R302.12.1 Materials. Draftstopping materials shall be not less than $^{1}/_{2}$-inch (12.7 mm) gypsum board, $^{3}/_{8}$-inch (9.5

mm) wood structural panels or other approved materials adequately supported. Draftstopping shall be installed parallel to the floor framing members unless otherwise approved by the building official. The integrity of the draftstops shall be maintained.

R302.13 Fire protection of floors. Floor assemblies that are not required elsewhere in this code to be fire-resistance rated, shall be provided with a $^1/_2$-inch (12.7 mm) gypsum wallboard membrane, $^5/_8$-inch (16 mm) wood structural panel membrane, or equivalent on the underside of the floor framing member. Penetrations or openings for ducts, vents, electrical outlets, lighting, devices, luminaires, wires, speakers, drainage, piping and similar openings or penetrations shall be permitted.

Exceptions:

1. Floor assemblies located directly over a space protected by an automatic sprinkler system in accordance with Section *R313*, NFPA 13D, or other approved equivalent sprinkler system.
2. Floor assemblies located directly over a crawl space not intended for storage or for the installation of fuel-fired or electric-powered heating appliances.
3. Portions of floor assemblies shall be permitted to be unprotected where complying with the following:
   3.1. The aggregate area of the unprotected portions does not exceed 80 square feet (7.4 m^2) per story.
   3.2. Fireblocking in accordance with Section R302.11.1 is installed along the perimeter of the unprotected portion to separate the unprotected portion from the remainder of the floor assembly.
4. Wood floor assemblies using dimension lumber or structural composite lumber equal to or greater than 2-inch by 10-inch (50.8 mm by 254 mm) nominal dimension, or other approved floor assemblies demonstrating equivalent fire performance.

R302.14 Combustible insulation clearance. Combustible insulation shall be separated not less than 3 inches (76 mm) from recessed luminaires, fan motors and other heat-producing devices.

Exception: Where heat-producing devices are listed for lesser clearances, combustible insulation complying with 3the listing requirements shall be separated in accordance with the conditions stipulated in the listing.

Recessed luminaires installed in the *building envelope* shall meet *or exceed* the requirements *specified in the California Energy Code for recessed luminaires installed in insulated ceilings.*

SECTION R303
LIGHT, VENTILATION AND HEATING

R303.1 Habitable rooms. Habitable rooms shall have an aggregate glazing area of not less than 8 percent of the floor area of such rooms. Natural ventilation shall be through windows, skylights, doors, louvers or other approved openings to the outdoor air. Such openings shall be provided with ready access or shall otherwise be readily controllable by the building occupants. The openable area to the outdoors shall be not less than 4 percent of the floor area being ventilated.

Exceptions:

1. The glazed areas need not be openable where the opening is not required by Section R310 and a whole-house mechanical ventilation system is installed in accordance with *the California Mechanical Code.*
2. The glazed areas need not be installed in rooms where Exception 1 is satisfied and artificial light is provided that is capable of producing an average illumination of 6 footcandles (65 lux) over the area of the room at a height of 30 inches (762 mm) above the floor level.
3. Use of sunroom and patio covers, as defined in Section R202, shall be permitted for natural ventilation if in excess of 40 percent of the exterior sunroom walls are open, or are enclosed only by insect screening.
4. *The windows, doors, louvers and other approved closeable openings not required by Section R310 may open into a passive solar energy collector for ventilation required by this section. The area of ventilation openings to the outside of the passive solar energy collector shall be increased to compensate for the openings required by the interior space.*
5. *Glazed openings may open into a passive solar energy collector provided the area of exterior glazed opening(s) into the passive solar energy collector is increased to compensate for the area required by the interior space.*

R303.2 Adjoining rooms. For the purpose of determining light and ventilation requirements, rooms shall be considered to be a portion of an adjoining room where not less than one-half of the area of the common wall is open and unobstructed and provides an opening of not less than one-tenth of the floor area of the interior room and not less than 25 square feet (2.3 m^2).

Exception: Openings required for light or ventilation shall be permitted to open into a sunroom with thermal isolation or a patio cover, provided that there is an openable area between the adjoining room and the sunroom or patio cover of not less than one-tenth of the floor area of the interior room and not less than 20 square feet (2 m^2). The minimum openable area to the outdoors shall be based on the total floor area being ventilated.

R303.3 Bathrooms. Bathrooms, water closet compartments and other similar rooms shall be provided with aggregate glazing area in windows of not less than 3 square feet (0.3 m^2), one-half of which shall be openable.

Exception: The glazed areas shall not be required where artificial light and a local exhaust system are provided.

The minimum local exhaust rates shall be *50 cubic feet per minute (25 L/s) for intermittent ventilation or 20 cubic feet per minute (10 L/s) for continuous ventilation* in accordance with the *California Mechanical Code, Chapter 4*. Exhaust air from the space shall be exhausted directly to the outdoors.

R303.3.1 Bathroom exhaust fans. *Each bathroom containing a bathtub, shower or tub/shower combination shall be mechanically ventilated for purposes of humidity control in accordance with the California Mechanical Code, Chapter 4; and the California Green Building Standards Code, Chapter 4, Division 4.5.*

Note: Window operation is not a permissible method of providing bathroom exhaust for humidity control.

R303.4 ***Ventilation.*** *Ventilation air rates shall be in compliance with the California Mechanical Code.*

R303.5 Opening location. Outdoor intake and exhaust openings shall be located in accordance with Sections R303.5.1 and R303.5.2.

R303.5.1 Intake openings. Mechanical and gravity outdoor air intake openings shall be located not less than 10 feet (3048 mm) from any hazardous or noxious contaminant, such as vents, chimneys, plumbing vents, streets, alleys, parking lots and loading docks.

For the purpose of this section, the exhaust from dwelling unit toilet rooms, bathrooms and kitchens shall not be considered as hazardous or noxious.

Exceptions:

1. The 10-foot (3048 mm) separation is not required where the intake opening is located 3 feet (914 mm) or greater below the contaminant source.
2. Vents and chimneys serving fuel-burning appliances shall be terminated in accordance with the applicable provisions of Chapters 18 and 24.
3. Clothes dryer exhaust ducts shall be terminated in accordance with Section M1502.3.

R303.5.2 Exhaust openings. Exhaust air shall not be directed onto walkways.

R303.6 Outside opening protection. Air exhaust and intake openings that terminate outdoors shall be protected with corrosion-resistant screens, louvers or grilles having an opening size of not less than $^1/_4$ inch (6 mm) and a maximum opening size of $^1/_2$ inch (13 mm), in any dimension. Openings shall be protected against local weather conditions. Outdoor air exhaust and intake openings shall meet the provisions for exterior wall opening protectives in accordance with this code.

R303.7 Interior stairway illumination. Interior stairways shall be provided with an artificial light source to illuminate the landings and treads. The light source shall be capable of illuminating treads and landings to levels of not less than 1 foot-candle (11 lux) as measured at the center of treads and landings. There shall be a wall switch at each floor level to control the light source where the stairway has six or more risers.

Exception: A switch is not required where remote, central or automatic control of lighting is provided.

R303.8 Exterior stairway illumination. Exterior stairways shall be provided with an artificial light source located at the top landing of the stairway. Exterior stairways providing access to a basement from the outdoor grade level shall be provided with an artificial light source located at the bottom landing of the stairway.

R303.9 Required glazed openings. Required glazed openings shall open directly onto a street or public alley, or a yard or court located on the same lot as the building.

Exceptions:

1. Required glazed openings that face into a roofed porch where the porch abuts a street, yard or court and the longer side of the porch is not less than 65 percent unobstructed and the ceiling height is not less than 7 feet (2134 mm).
2. Eave projections shall not be considered as obstructing the clear open space of a yard or court.
3. Required glazed openings that face into the area under a deck, balcony, bay or floor cantilever where a clear vertical space not less than 36 inches (914 mm) in height is provided.

R303.9.1 Sunroom additions. Required glazed openings shall be permitted to open into sunroom additions or patio covers that abut a street, yard or court if in excess of 40 percent of the exterior sunroom walls are open, or are enclosed only by insect screening, and the ceiling height of the sunroom is not less than 7 feet (2134 mm).

R303.9.1.1 Passive solar energy collectors. *When a passive solar energy collector is designed as a conditioned area it shall comply with the California Energy Code. Nonconditioned passive solar energy collectors are exempt from the California Energy Code.*

R303.10 Required heating. Where the winter design temperature in Table R301.2(1) is below 60°F (16°C), every dwelling unit shall be provided with heating facilities capable of maintaining a room temperature of not less than 68°F (20°C) at a point 3 feet (914 mm) above the floor and 2 feet (610 mm) from exterior walls in habitable rooms at the design temperature. The installation of one or more portable space heaters shall not be used to achieve compliance with this section.

Note: See Section R301.1.1.1 for limited-density owner-built rural dwellings.

SECTION R304
MINIMUM ROOM AREAS

R304.1 Minimum area. Habitable rooms shall have a floor area of not less than 70 square feet (6.5 m^2).

Exception: Kitchens.

R304.2 Minimum dimensions. Habitable rooms shall be not less than 7 feet (2134 mm) in any horizontal dimension.

Exceptions:

1. *Kitchens.*
2. *Limited-density owner-built rural dwellings. See Section R301.1.1.1.*

R304.3 Height effect on room area. Portions of a room with a sloping ceiling measuring less than 5 feet (1524 mm) or a furred ceiling measuring less than 7 feet (2134 mm) from the finished floor to the finished ceiling shall not be considered as contributing to the minimum required habitable area for that room.

SECTION R305
CEILING HEIGHT

R305.1 Minimum height. Habitable space, hallways and portions of basements containing these spaces shall have a ceiling height of not less than 7 feet (2134 mm). Bathrooms, toilet rooms and laundry rooms shall have a ceiling height of not less than 6 feet 8 inches (2032 mm).

Exceptions:

1. For rooms with sloped ceilings, the required floor area of the room shall have a ceiling height of not less than 5 feet (1524 mm) and not less than 50 percent of the required floor area shall have a ceiling height of not less than 7 feet (2134 mm).
2. The ceiling height above bathroom and toilet room fixtures shall be such that the fixture is capable of being used for its intended purpose. A shower or tub equipped with a showerhead shall have a ceiling height of not less than 6 feet 8 inches (2032 mm) above an area of not less than 30 inches (762 mm) by 30 inches (762 mm) at the showerhead.
3. Beams, girders, ducts or other obstructions in basements containing habitable space shall be permitted to project to within 6 feet 4 inches (1931 mm) of the finished floor.

R305.1.1 Basements. Portions of basements that do not contain habitable space or hallways shall have a ceiling height of not less than 6 feet 8 inches (2032 mm).

Exception: At beams, girders, ducts or other obstructions, the ceiling height shall be not less than 6 feet 4 inches (1931 mm) from the finished floor.

SECTION R306
SANITATION

R306.1 Toilet facilities. Every dwelling unit shall be provided with a water closet, lavatory, and a bathtub or shower.

R306.2 Kitchen. Each dwelling unit shall be provided with a kitchen area and every kitchen area shall be provided with a sink.

R306.3 Sewage disposal. Plumbing fixtures shall be connected to a sanitary sewer or to an approved private sewage disposal system.

R306.4 Water supply to fixtures. Plumbing fixtures shall be connected to an approved water supply. Kitchen sinks, lavatories, bathtubs, showers, bidets, laundry tubs and washing machine outlets shall be provided with hot and cold water.

SECTION R307
TOILET, BATH AND SHOWER SPACES

R307.1 Space required. Fixtures shall be spaced in accordance with *the California Plumbing Code.*

R307.2 Bathtub and shower spaces. Bathtub and shower floors and walls above bathtubs with installed shower heads and in shower compartments shall be finished with a nonabsorbent surface. Such wall surfaces shall extend to a height of not less than 6 feet (1829 mm) above the floor.

SECTION R308
GLAZING

R308.1 Identification. Except as indicated in Section R308.1.1 each pane of glazing installed in hazardous locations as defined in Section R308.4 shall be provided with a manufacturer's designation specifying who applied the designation, the type of glass and the safety glazing standard with which it complies, and that is visible in the final installation. The designation shall be acid etched, sandblasted, ceramic-fired, laser etched, embossed, or be of a type that once applied cannot be removed without being destroyed. A label shall be permitted in lieu of the manufacturer's designation.

Exceptions:

1. For other than tempered glass, manufacturer's designations are not required provided that the building official approves the use of a certificate, affidavit or other evidence confirming compliance with this code.
2. Tempered spandrel glass is permitted to be identified by the manufacturer with a removable paper designation.

R308.1.1 Identification of multiple assemblies. Multipane assemblies having individual panes not exceeding 1 square foot (0.09 m^2) in exposed area shall have not less than one pane in the assembly identified in accordance with Section R308.1. Other panes in the assembly shall be labeled "CPSC 16 CFR 1201" or "ANSI Z97.1" as appropriate.

R308.2 Louvered windows or jalousies. Regular, float, wired or patterned glass in jalousies and louvered windows shall be not less than nominal $^3/_{16}$ inch (5 mm) thick and not more than 48 inches (1219 mm) in length. Exposed glass edges shall be smooth.

R308.2.1 Wired glass prohibited. Wired glass with wire exposed on longitudinal edges shall not be used in jalousies or louvered windows.

R308.3 Human impact loads. Individual glazed areas, including glass mirrors in hazardous locations such as those indicated as defined in Section R308.4, shall pass the test requirements of Section R308.3.1.

Exceptions:

1. Louvered windows and jalousies shall comply with Section R308.2.
2. Mirrors and other glass panels mounted or hung on a surface that provides a continuous backing support.
3. Glass unit masonry complying with Section R607.

R308.3.1 Impact test. Where required by other sections of the code, glazing shall be tested in accordance with CPSC 16 CFR 1201. Glazing shall comply with the test criteria for Category II unless otherwise indicated in Table R308.3.1(1).

Exception: Glazing not in doors or enclosures for hot tubs, whirlpools, saunas, steam rooms, bathtubs and showers shall be permitted to be tested in accordance with ANSI Z97.1. Glazing shall comply with the test criteria for Class A unless otherwise indicated in Table R308.3.1(2).

R308.4 Hazardous locations. The locations specified in Sections R308.4.1 through R308.4.7 shall be considered to be specific hazardous locations for the purposes of glazing.

R308.4.1 Glazing in doors. Glazing in fixed and operable panels of swinging, sliding and bifold doors shall be considered to be a hazardous location.

Exceptions:

1. Glazed openings of a size through which a 3-inch-diameter (76 mm) sphere is unable to pass.
2. Decorative glazing.

R308.4.2 Glazing adjacent to doors. Glazing in an individual fixed or operable panel adjacent to a door shall be considered to be a hazardous location where the bottom exposed edge of the glazing is less than 60 inches (1524 mm) above the floor or walking surface and it meets either of the following conditions:

1. Where the glazing is within 24 inches (610 mm) of either side of the door in the plane of the door in a closed position.
2. Where the glazing is on a wall less than 180 degrees (3.14 rad) from the plane of the door in a closed position and within 24 inches (610 mm) of the hinge side of an in-swinging door.

Exceptions:

1. Decorative glazing.
2. Where there is an intervening wall or other permanent barrier between the door and the glazing.
3. Where access through the door is to a closet or storage area 3 feet (914 mm) or less in depth. Glazing in this application shall comply with Section R308.4.3.
4. Glazing that is adjacent to the fixed panel of patio doors.

R308.4.3 Glazing in windows. Glazing in an individual fixed or operable panel that meets all of the following conditions shall be considered to be a hazardous location:

1. The exposed area of an individual pane is larger than 9 square feet (0.836 m^2).
2. The bottom edge of the glazing is less than 18 inches (457 mm) above the floor.
3. The top edge of the glazing is more than 36 inches (914 mm) above the floor.

TABLE R308.3.1(1)
MINIMUM CATEGORY CLASSIFICATION OF GLAZING USING CPSC 16 CFR 1201

EXPOSED SURFACE AREA OF ONE SIDE OF ONE LITE	GLAZING IN STORM OR COMBINATION DOORS (Category Class)	GLAZING IN DOORS (Category Class)	GLAZED PANELS REGULATED BY SECTION R308.4.3 (Category Class)	GLAZED PANELS REGULATED BY SECTION R308.4.2 (Category Class)	GLAZING IN DOORS AND ENCLOSURES REGULATED BY SECTION 308.4.5 (Category Class)	SLIDING GLASS DOORS PATIO TYPE (Category Class)
9 square feet or less	I	I	NR	I	II	II
More than 9 square feet	II	II	II	II	II	II

For SI: 1 square foot = 0.0929 m^2.
NR = No Requirement.

TABLE R308.3.1(2)
MINIMUM CATEGORY CLASSIFICATION OF GLAZING USING ANSI Z97.1

EXPOSED SURFACE AREA OF ONE SIDE OF ONE LITE	GLAZED PANELS REGULATED BY SECTION R308.4.3 (Category Class)	GLAZED PANELS REGULATED BY SECTION R308.4.2 (Category Class)	DOORS AND ENCLOSURES REGULATED BY SECTION R308.4.5[a] (Category Class)
9 square feet or less	No requirement	B	A
More than 9 square feet	A	A	A

For SI: 1 square foot = 0.0929 m^2.
a. Use is permitted only by the exception to Section R308.3.1.

4. One or more walking surfaces are within 36 inches (914 mm), measured horizontally and in a straight line, of the glazing.

   Exceptions:

   1. Decorative glazing.
   2. Where glazing is adjacent to a walking surface and a horizontal rail is installed 34 to 38 inches (864 to 965 mm) above the walking surface. The rail shall be capable of withstanding a horizontal load of 50 pounds per linear foot (730 N/m) without contacting the glass and have a cross-sectional height of not less than $1^1/_2$ inches (38 mm).
   3. Outboard panes in insulating glass units and other multiple glazed panels where the bottom edge of the glass is 25 feet (7620 mm) or more above grade, a roof, walking surfaces or other horizontal [within 45 degrees (0.79 rad) of horizontal] surface adjacent to the glass exterior.

R308.4.4 Glazing in guards and railings. Glazing in guards and railings, including structural baluster panels and nonstructural in-fill panels, regardless of area or height above a walking surface shall be considered to be a hazardous location.

R308.4.4.1 Structural glass baluster panels. Guards with structural glass baluster panels shall be installed with an attached top rail or handrail. The top rail or handrail shall be supported by not less than three glass baluster panels, or shall be otherwise supported to remain in place should one glass baluster panel fail.

Exception: An attached top rail or handrail is not required where the glass baluster panels are laminated glass with two or more glass plies of equal thickness and of the same glass type.

R308.4.5 Glazing and wet surfaces. Glazing in walls, enclosures or fences containing or facing hot tubs, spas, whirlpools, saunas, steam rooms, bathtubs, showers and indoor or outdoor swimming pools where the bottom exposed edge of the glazing is less than 60 inches (1524 mm) measured vertically above any standing or walking surface shall be considered to be a hazardous location. This shall apply to single glazing and each pane in multiple glazing.

Exception: Glazing that is more than 60 inches (1524 mm), measured horizontally and in a straight line, from the water's edge of a bathtub, hot tub, spa, whirlpool or swimming pool or from the edge of a shower, sauna or steam room.

R308.4.6 Glazing adjacent to stairs and ramps. Glazing where the bottom exposed edge of the glazing is less than 36 inches (914 mm) above the plane of the adjacent walking surface of stairways, landings between flights of stairs and ramps shall be considered to be a hazardous location.

Exceptions:

1. Where glazing is adjacent to a walking surface and a horizontal rail is installed at 34 to 38 inches (864 to 965 mm) above the walking surface. The rail shall be capable of withstanding a horizontal load of 50 pounds per linear foot (730 N/m) without contacting the glass and have a cross-sectional height of not less than $1^1/_2$ inches (38 mm).
2. Glazing 36 inches (914 mm) or more measured horizontally from the walking surface.

R308.4.7 Glazing adjacent to the bottom stair landing. Glazing adjacent to the landing at the bottom of a stairway where the glazing is less than 36 inches (914 mm) above the landing and within a 60-inch (1524 mm) horizontal arc less than 180 degrees (3.14 rad) from the bottom tread nosing shall be considered to be a hazardous location. (See Figure R308.4.7.)

Exception: Where the glazing is protected by a guard complying with Section R312 and the plane of the glass is more than 18 inches (457 mm) from the guard.

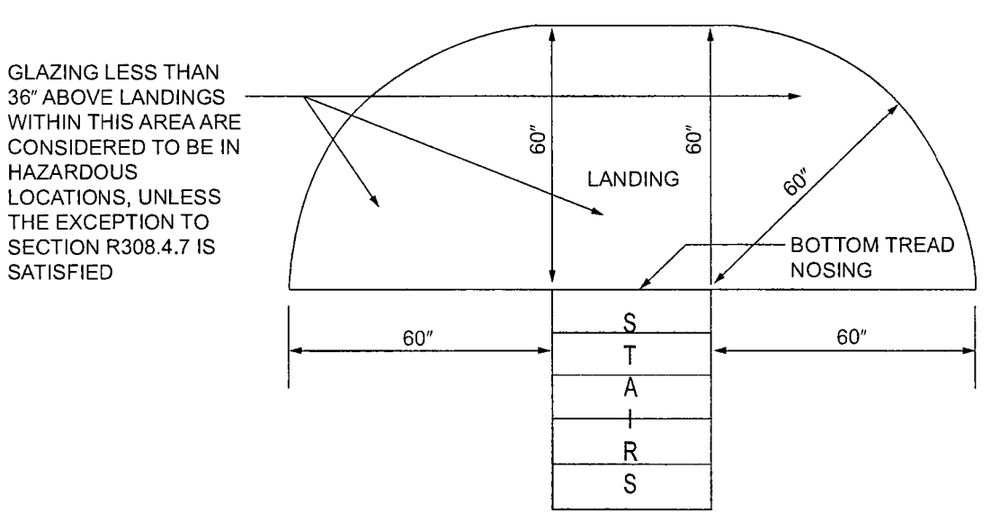

For SI: 1 inch = 25.4 mm.

FIGURE R308.4.7
HAZARDOUS GLAZING LOCATIONS AT BOTTOM STAIR LANDINGS

R308.5 Site-built windows. Site-built windows shall comply with Section 2404 of the *California Building Code.*

R308.6 Skylights and sloped glazing. Skylights and sloped glazing shall comply with the following sections.

R308.6.1 Definitions. The following terms are defined in Chapter 2:

SKYLIGHT, UNIT.

SKYLIGHTS AND SLOPED GLAZING.

TUBULAR DAYLIGHTING DEVICE (TDD).

R308.6.2 Materials. Glazing materials shall be limited to the following:

1. Laminated glass with not less than a 0.015-inch (0.38 mm) polyvinyl butyral interlayer for glass panes 16 square feet (1.5 m^2) or less in area located such that the highest point of the glass is not more than 12 feet (3658 mm) above a walking surface; for higher or larger sizes, the interlayer thickness shall be not less than 0.030 inch (0.76 mm).
2. Fully tempered glass.
3. Heat-strengthened glass.
4. Wired glass.
5. Approved rigid plastics.

R308.6.3 Screens, general. For fully tempered or heat-strengthened glass, a retaining screen meeting the requirements of Section R308.6.7 shall be installed below the glass, except for fully tempered glass that meets either condition listed in Section R308.6.5.

R308.6.4 Screens with multiple glazing. Where the inboard pane is fully tempered, heat-strengthened or wired glass, a retaining screen meeting the requirements of Section R308.6.7 shall be installed below the glass, except for either condition listed in Section R308.6.5. Other panes in the multiple glazing shall be of any type listed in Section R308.6.2.

R308.6.5 Screens not required. Screens shall not be required where fully tempered glass is used as single glazing or the inboard pane in multiple glazing and either of the following conditions are met:

1. The glass area is 16 square feet (1.49 m^2) or less; the highest point of glass is not more than 12 feet (3658 mm) above a walking surface; the nominal glass thickness is not more than $^3/_{16}$ inch (4.8 mm); and (for multiple glazing only) the other pane or panes are fully tempered, laminated or wired glass.
2. The glass area is greater than 16 square feet (1.49 m^2); the glass is sloped 30 degrees (0.52 rad) or less from vertical; and the highest point of glass is not more than 10 feet (3048 mm) above a walking surface.

R308.6.6 Glass in greenhouses. Any glazing material is permitted to be installed without screening in the sloped areas of greenhouses, provided that the greenhouse height at the ridge does not exceed 20 feet (6096 mm) above grade.

R308.6.7 Screen characteristics. The screen and its fastenings shall be capable of supporting twice the weight of the glazing, be firmly and substantially fastened to the framing members, and have a mesh opening of not more than 1 inch by 1 inch (25 mm by 25 mm).

R308.6.8 Curbs for skylights. Unit skylights installed in a roof with a pitch of less than three units vertical in 12 units horizontal (25-percent slope) shall be mounted on a curb extending not less than 4 inches (102 mm) above the plane of the roof, unless otherwise specified in the manufacturer's installation instructions.

R308.6.9 Testing and labeling. Unit skylights and tubular daylighting devices shall be tested by an approved independent laboratory, and bear a label identifying manufacturer, performance grade rating and approved inspection agency to indicate compliance with the requirements of AAMA/WDMA/CSA 101/I.S.2/A440.

R308.6.9.1 Comparative analysis for glass-glazed unit skylights. Structural wind load design pressures for glass-glazed unit skylights different than the size tested in accordance with Section R308.6.9 shall be permitted to be different than the design value of the tested unit where determined in accordance with one of the following comparative analysis methods:

1. Structural wind load design pressures for glass-glazed unit skylights smaller than the size tested in accordance with Section R308.6.9 shall be permitted to be higher than the design value of the tested unit provided that such higher pressures are determined by accepted engineering analysis. Components of the smaller unit shall be the same as those of the tested unit. Such calculated design pressures shall be validated by an additional test of the glass-glazed unit skylight having the highest allowable design pressure.
2. In accordance with WDMA I.S. 11.

SECTION R309
GARAGES AND CARPORTS

R309.1 Floor surface. Garage floor surfaces shall be of approved noncombustible material.

The area of floor used for parking of automobiles or other vehicles shall be sloped to facilitate the movement of liquids to a drain or toward the main vehicle entry doorway.

R309.2 Carports. Carports shall be open on not less than two sides. Carport floor surfaces shall be of approved noncombustible material. Carports not open on two or more sides shall be considered to be a garage and shall comply with the provisions of this section for garages.

The area of floor used for parking of automobiles or other vehicles shall be sloped to facilitate the movement of liquids to a drain or toward the main vehicle entry doorway.

Exception: Asphalt surfaces shall be permitted at ground level in carports.

R309.3 Flood hazard areas. For buildings located in flood hazard areas as established by Table R301.2(1), garage floors shall be one of the following:

1. Elevated to or above the design flood elevation as determined in accordance with Section R322.
2. Located below the design flood elevation provided that the floors are at or above grade on not less than one side, are used solely for parking, building access or storage, meet the requirements of Section R322 and are otherwise constructed in accordance with this code.

R309.4 Automatic garage door openers. Automatic garage door openers, if provided, shall be listed and labeled in accordance with UL 325. *See Health and Safety Code Sections 19890 and 19891 for additional provisions for residential garage door openers.*

R309.5 Fire sprinklers *location on property*. Private garages shall be protected by fire sprinklers where the garage wall has been designed based on Table R302.1(2), Note a. Sprinklers in garages shall be connected to an automatic sprinkler system that complies with Section *R313*. Garage sprinklers shall be residential sprinklers or quick-response sprinklers, designed to provide a density of 0.05 gpm/ft^2. Garage doors shall not be considered obstructions with respect to sprinkler placement.

R309.6 Fire sprinklers, attached garages, and carports with habitable space above. *Attached garages and carports with habitable space above shall be protected by fire sprinklers in accordance with this section and Section R313. Protection shall be provided in accordance with one of the following:*

1. *Residential sprinklers installed in accordance with their listing.*
2. *Extended coverage sprinklers discharging water not less than their listed flow rate for Light Hazard in accordance with NFPA 13.*
3. *Quick-response spray sprinklers at light hazard spacing in accordance with NFPA 13 designed to discharge at 0.05 gpm/ft^2 density (minimum).*

The system demand shall be permitted to be limited to the number of sprinklers in the compartment but shall not exceed two sprinklers for hydraulic calculation purposes. Garage doors shall not be considered obstructions and shall be permitted to be ignored for placement and calculation of sprinklers.

Exception: *An automatic residential fire sprinkler system shall not be required when additions or alterations are made to existing carports and/or garages that do not have an automatic residential fire sprinkler system installed in accordance with this section.*

R309.7 Extension garage door springs. *Every extension garage door spring sold or offered for sale, whether new or sold as a replacement, or installed in any garage or carport which is accessory to a dwelling covered by this code, shall conform to the requirements for garage door springs located in Section 1210 of the California Building Code.*

R309.8 Electric vehicle (EV) charging infrastructure. *Newly constructed one- and two-family dwellings and townhouses with attached private garages shall comply with EV infrastructure requirements in accordance with the California Green Building Standards Code, Chapter 4, Division 4.1.*

SECTION R310
EMERGENCY ESCAPE AND RESCUE OPENINGS

R310.1 Emergency escape and rescue opening required. Basements, habitable attics and every sleeping room shall have not less than one operable emergency escape and rescue opening. Where basements contain one or more sleeping rooms, an emergency escape and rescue opening shall be required in each sleeping room. Emergency escape and rescue openings shall open directly into a public way, or to a yard or court that opens to a public way.

Exceptions:

1. Storm shelters and basements used only to house mechanical equipment not exceeding a total floor area of 200 square feet (18.58 m^2).
2. Where the dwelling or townhouse is equipped with an automatic sprinkler system installed in accordance with Section P2904, sleeping rooms in basements shall not be required to have emergency escape and rescue openings provided that the basement has one of the following:
   - 2.1. One means of egress complying with Section R311 and one emergency escape and rescue opening.
   - 2.2. Two means of egress complying with Section R311.

R310.1.1 Operational constraints and opening control devices. Emergency escape and rescue openings shall be *maintained free of any obstructions other than those allowed by this section and shall be* operational from the inside of the room without the use of keys, tools or special knowledge. Window opening control devices on windows serving as a required emergency escape and rescue opening shall comply with ASTM F2090.

R310.2 Emergency escape and rescue openings. Emergency escape and rescue openings shall have minimum dimensions as specified in this section.

R310.2.1 Minimum opening area. Emergency and escape rescue openings shall have a net clear opening of not less than 5.7 square feet (0.530 m^2). The net clear opening dimensions required by this section shall be obtained by the normal operation of the emergency escape and rescue opening from the inside. The net clear height of the opening shall be not less than 24 inches (610 mm) and the net clear width shall be not less than 20 inches (508 mm).

Exception: Grade floor openings or below-grade openings shall have a net clear opening area of not less than 5 square feet (0.465 m^2).

R310.2.2 Window sill height. Where a window is provided as the emergency escape and rescue opening, it shall

have *the bottom of the clear opening not greater than 44 inches (1118 mm) measured from the floor*; where the sill height is below grade, it shall be provided with a window well in accordance with Section R310.2.3.

R310.2.3 Window wells. The horizontal area of the window well shall be not less than 9 square feet (0.9 m^2), with a horizontal projection and width of not less than 36 inches (914 mm). The area of the window well shall allow the emergency escape and rescue opening to be fully opened.

Exception: The ladder or steps required by Section R310.2.3.1 shall be permitted to encroach not more than 6 inches (152 mm) into the required dimensions of the window well.

R310.2.3.1 Ladder and steps. Window wells with a vertical depth greater than 44 inches (1118 mm) shall be equipped with a permanently affixed ladder or steps usable with the window in the fully open position. Ladders or steps required by this section shall not be required to comply with Section R311.7. Ladders or rungs shall have an inside width of not less than 12 inches (305 mm), shall project not less than 3 inches (76 mm) from the wall and shall be spaced not more than 18 inches (457 mm) on center vertically for the full height of the window well.

R310.2.3.2 Drainage. Window wells shall be designed for proper drainage by connecting to the building's foundation drainage system required by Section R405.1 or by an approved alternative method.

Exception: A drainage system for window wells is not required where the foundation is on well-drained soil or sand-gravel mixture soils in accordance with the United Soil Classification System, Group I Soils, as detailed in Table R405.1.

R310.2.4 Emergency escape and rescue openings under decks and porches. Emergency escape and rescue openings installed under decks and porches shall be fully openable and provide a path not less than 36 inches (914 mm) in height to a yard or court.

R310.2.5 Replacement windows. Replacement windows installed in buildings meeting the scope of this code shall be exempt from the maximum sill height requirements of Section R310.2.2 and the requirements of Section R310.2.1, provided that the replacement window meets the following conditions:

1. The replacement window is the manufacturer's largest standard size window that will fit within the existing frame or existing rough opening. The replacement window is of the same operating style as the existing window or a style that provides for an equal or greater window opening area than the existing window.
2. The replacement window is not part of a change of occupancy.

R310.3 Emergency escape and rescue doors. Where a door is provided as the required emergency escape and rescue opening, it shall be a side-hinged door or a slider. Where the opening is below the adjacent grade, it shall be provided with an area well.

R310.3.1 Minimum door opening size. The minimum net clear height opening for any door that serves as an emergency and escape rescue opening shall be in accordance with Section R310.2.1.

R310.3.2 Area wells. Area wells shall have a width of not less than 36 inches (914 mm). The area well shall be sized to allow the emergency escape and rescue door to be fully opened.

R310.3.2.1 Ladder and steps. Area wells with a vertical depth greater than 44 inches (1118 mm) shall be equipped with a permanently affixed ladder or steps usable with the door in the fully open position. Ladders or steps required by this section shall not be required to comply with Section R311.7. Ladders or rungs shall have an inside width of not less than 12 inches (305 mm), shall project not less than 3 inches (76 mm) from the wall and shall be spaced not more than 18 inches (457 mm) on center vertically for the full height of the exterior stairwell.

R310.3.2.2 Drainage. Area wells shall be designed for proper drainage by connecting to the building's foundation drainage system required by Section R405.1 or by an approved alternative method.

Exception: A drainage system for area wells is not required where the foundation is on well-drained soil or sand-gravel mixture soils in accordance with the United Soil Classification System, Group I Soils, as detailed in Table R405.1.

R310.4 Bars, grilles, covers and screens. Where bars, grilles, covers, screens or similar devices are placed over emergency escape and rescue openings, area wells, or window wells, the minimum net clear opening size shall comply with Sections R310.2.1 through R310.2.3, and such devices shall be releasable or removable from the inside without the use of a key, tool, special knowledge or force greater than that required for the normal operation of the escape and rescue opening. *The release mechanism shall be maintained operable at all times.*

Such bars, grills, grates or any similar devices shall be equipped with an approved exterior release device for use by the fire department only when required by the authority having jurisdiction.

Where security bars (burglar bars) are installed on emergency egress and rescue windows or doors, on or after July 1, 2000, such devices shall comply with California Building Standards Code, Part 12, Chapter 12-3 and other applicable provisions of this code.

R310.5 Dwelling additions. Where dwelling additions contain sleeping rooms, an emergency escape and rescue opening shall be provided in each new sleeping room. Where dwelling additions have basements, an emergency escape and rescue opening shall be provided in the new basement.

Exceptions:

1. An emergency escape and rescue opening is not required in a new basement that contains a sleeping room with an emergency escape and rescue opening.
2. An emergency escape and rescue opening is not required in a new basement where there is an emergency escape and rescue opening in an existing basement that is accessed from the new basement.

R310.6 Alterations or repairs of existing basements. An emergency escape and rescue opening is not required where existing basements undergo alterations or repairs.

Exception: New sleeping rooms created in an existing basement shall be provided with emergency escape and rescue openings in accordance with Section R310.1.

SECTION R311
MEANS OF EGRESS

R311.1 Means of egress. Dwellings shall be provided with a means of egress in accordance with this section. The means of egress shall provide a continuous and unobstructed path of vertical and horizontal egress travel from all portions of the dwelling to the required egress door without requiring travel through a garage. The required egress door shall open directly into a public way or to a yard or court that opens to a public way.

R311.2 Egress door. Not less than one egress door shall be provided for each dwelling unit. The egress door shall be side-hinged, and shall provide a clear width of not less than 32 inches (813 mm) where measured between the face of the door and the stop, with the door open 90 degrees (1.57 rad). The clear height of the door opening shall be not less than 78 inches (1981 mm) in height measured from the top of the threshold to the bottom of the stop. Other doors shall not be required to comply with these minimum dimensions. Egress doors shall be readily openable from inside the dwelling without the use of a key or special knowledge or effort.

R311.3 Floors and landings at exterior doors. There shall be a landing or floor on each side of each exterior door. The width of each landing shall be not less than the door served. Landings shall have a dimension of not less than 36 inches (914 mm) measured in the direction of travel. The slope at exterior landings shall not exceed $^1/_4$ unit vertical in 12 units horizontal (2 percent).

Exception: Exterior balconies less than 60 square feet (5.6 m^2) and only accessed from a door are permitted to have a landing that is less than 36 inches (914 mm) measured in the direction of travel.

R311.3.1 Floor elevations at the required egress doors. Landings or finished floors at the required egress door shall be not more than $1^1/_2$ inches (38 mm) lower than the top of the threshold.

Exception: The landing or floor on the exterior side shall be not more than $7^3/_4$ inches (196 mm) below the top of the threshold provided that the door does not swing over the landing or floor.

Where exterior landings or floors serving the required egress door are not at grade, they shall be provided with access to grade by means of a ramp in accordance with Section R311.8 or a stairway in accordance with Section R311.7.

R311.3.2 Floor elevations at other exterior doors. Doors other than the required egress door shall be provided with landings or floors not more than $7^3/_4$ inches (196 mm) below the top of the threshold.

Exception: A top landing is not required where a stairway of not more than two risers is located on the exterior side of the door, provided that the door does not swing over the stairway.

R311.3.3 Storm and screen doors. Storm and screen doors shall be permitted to swing over exterior stairs and landings.

R311.4 Vertical egress. Egress from habitable levels including habitable attics and basements that are not provided with an egress door in accordance with Section R311.2 shall be by *one or more ramps* in accordance with Section R311.8 or *one or more stairways* in accordance with Section R311.7 or both. *For habitable levels or basements located more than one story above or more than one story below an egress door, the maximum travel distance from any occupied point to a stairway or ramp that provides egress from such habitable level or basement, shall not exceed 50 feet (15 240 mm).*

R311.5 Landing, deck, balcony and stair construction and attachment. Exterior landings, decks, balconies, stairs and similar facilities shall be positively anchored to the primary structure to resist both vertical and lateral forces or shall be designed to be self-supporting. Attachment shall not be accomplished by use of toenails or nails subject to withdrawal.

R311.6 Hallways. The width of a hallway shall be not less than 3 feet (914 mm).

R311.7 Stairways.

R311.7.1 Width. Stairways shall be not less than 36 inches (914 mm) in clear width at all points above the permitted handrail height and below the required headroom height. The clear width of stairways at and below the handrail height, including treads and landings, shall be not less than $31^1/_2$ inches (787 mm) where a handrail is installed on one side and 27 inches (698 mm) where handrails are installed on both sides.

Exception: The width of spiral stairways shall be in accordance with Section R311.7.10.1.

R311.7.2 Headroom. The headroom in stairways shall be not less than 6 feet 8 inches (2032 mm) measured vertically from the sloped line adjoining the tread nosing or

from the floor surface of the landing or platform on that portion of the stairway.

Exceptions:

1. Where the nosings of treads at the side of a flight extend under the edge of a floor opening through which the stair passes, the floor opening shall not project horizontally into the required headroom more than $4^3/_4$ inches (121 mm).
2. The headroom for spiral stairways shall be in accordance with Section R311.7.10.1.

R311.7.3 Vertical rise. A flight of stairs shall not have a vertical rise larger than 151 inches (3835 mm) between floor levels or landings.

R311.7.4 Walkline. The walkline across winder treads and landings shall be concentric to the turn and parallel to the direction of travel entering and exiting the turn. The walkline shall be located 12 inches (305 mm) from the inside of the turn. The 12-inch (305 mm) dimension shall be measured from the widest point of the clear stair width at the walking surface. Where winders are adjacent within a flight, the point of the widest clear stair width of the adjacent winders shall be used.

R311.7.5 Stair treads and risers. Stair treads and risers shall meet the requirements of this section. For the purposes of this section, dimensions and dimensioned surfaces shall be exclusive of carpets, rugs or runners.

R311.7.5.1 Risers. The riser height shall be not more than $7^3/_4$ inches (196 mm). The riser shall be measured vertically between leading edges of the adjacent treads. The greatest riser height within any flight of stairs shall not exceed the smallest by more than $^3/_8$ inch (9.5 mm). Risers shall be vertical or sloped from the underside of the nosing of the tread above at an angle not more than 30 degrees (0.51 rad) from the vertical. At open risers, openings located more than 30 inches (762 mm), as measured vertically, to the floor or grade below shall not permit the passage of a 4-inch-diameter (102 mm) sphere.

Exceptions:

1. The opening between adjacent treads is not limited on spiral stairways.
2. The riser height of spiral stairways shall be in accordance with Section R311.7.10.1.

R311.7.5.2 Treads. The tread depth shall be not less than 10 inches (254 mm). The tread depth shall be measured horizontally between the vertical planes of the foremost projection of adjacent treads and at a right angle to the tread's leading edge. The greatest tread depth within any flight of stairs shall not exceed the smallest by more than $^3/_8$ inch (9.5 mm).

R311.7.5.2.1 Winder treads. Winder treads shall have a tread depth of not less than 10 inches (254 mm) measured between the vertical planes of the foremost projection of adjacent treads at the intersections with the walkline. Winder treads shall have a tread depth of not less than 6 inches (152 mm) at any point within the clear width of the stair. Within any flight of stairs, the largest winder tread depth at the walkline shall not exceed the smallest winder tread by more than $^3/_8$ inch (9.5 mm). Consistently shaped winders at the walkline shall be allowed within the same flight of stairs as rectangular treads and shall not be required to be within $^3/_8$ inch (9.5 mm) of the rectangular tread depth.

Exception: The tread depth at spiral stairways shall be in accordance with Section R311.7.10.1.

R311.7.5.3 Nosings. Nosings at treads, landings and floors of stairways shall have a radius of curvature at the nosing not greater than $^9/_{16}$ inch (14 mm) or a bevel not greater than $^1/_2$ inch (12.7 mm). A nosing projection not less than $^3/_4$ inch (19 mm) and not more than $1^1/_4$ inches (32 mm) shall be provided on stairways. The greatest nosing projection shall not exceed the smallest nosing projection by more than $^3/_8$ inch (9.5 mm) within a stairway.

Exception: A nosing projection is not required where the tread depth is not less than 11 inches (279 mm).

R311.7.5.4 Exterior plastic composite stair treads. Plastic composite exterior stair treads shall comply with the provisions of this section and Section R507.2.2.

R311.7.6 Landings for stairways. There shall be a floor or landing at the top and bottom of each stairway. The width perpendicular to the direction of travel shall be not less than the width of the flight served. For landings of shapes other than square or rectangular, the depth at the walk line and the total area shall be not less than that of a quarter circle with a radius equal to the required landing width. Where the stairway has a straight run, the depth in the direction of travel shall be not less than 36 inches (914 mm).

Exception: A floor or landing is not required at the top of an interior flight of stairs, including stairs in an enclosed garage, provided that a door does not swing over the stairs.

R311.7.7 Stairway walking surface. The walking surface of treads and landings of stairways shall be sloped not steeper than one unit vertical in 48 inches horizontal (2-percent slope).

R311.7.8 Handrails. Handrails shall be provided on not less than one side of each flight of stairs with four or more risers.

R311.7.8.1 Height. Handrail height, measured vertically from the sloped plane adjoining the tread nosing, or finish surface of ramp slope, shall be not less than 34 inches (864 mm) and not more than 38 inches (965 mm).

Exceptions:

1. The use of a volute, turnout or starting easing shall be allowed over the lowest tread.

2. Where handrail fittings or bendings are used to provide continuous transition between flights, transitions at winder treads, the transition from handrail to guard, or used at the start of a flight, the handrail height at the fittings or bendings shall be permitted to exceed 38 inches (956 mm).

R311.7.8.2 Handrail projection. Handrails shall not project more than $4^1/_2$ inches (114 mm) on either side of the stairway.

Exception: Where nosings of landings, floors or passing flights project into the stairway reducing the clearance at passing handrails, handrails shall project not more than $6^1/_2$ inches (165 mm) into the stairway, provided that the stair width and handrail clearance are not reduced to less than that required.

R311.7.8.3 Handrail clearance. Handrails adjacent to a wall shall have a space of not less than $1^1/_2$ inches (38 mm) between the wall and the handrails.

R311.7.8.4 Continuity. Handrails shall be continuous for the full length of the flight, from a point directly above the top riser of the flight to a point directly above the lowest riser of the flight. Handrail ends shall be returned or shall terminate in newel posts or safety terminals.

Exceptions:

1. Handrail continuity shall be permitted to be interrupted by a newel post at a turn in a flight with winders, at a landing, or over the lowest tread.
2. A volute, turnout or starting easing shall be allowed to terminate over the lowest tread.

R311.7.8.5 Grip size. Required handrails shall be of one of the following types or provide equivalent graspability.

1. Type I. Handrails with a circular cross section shall have an outside diameter of not less than $1^1/_4$ inches (32 mm) and not greater than 2 inches (51 mm). If the handrail is not circular, it shall have a perimeter of not less than 4 inches (102 mm) and not greater than $6^1/_4$ inches (160 mm) and a cross section of not more than $2^1/_4$ inches (57 mm). Edges shall have a radius of not less than 0.01 inch (0.25 mm).
2. Type II. Handrails with a perimeter greater than $6^1/_4$ inches (160 mm) shall have a graspable finger recess area on both sides of the profile. The finger recess shall begin within $^3/_4$ inch (19 mm) measured vertically from the tallest portion of the profile and have a depth of not less than $^5/_{16}$ inch (8 mm) within $^7/_8$ inch (22 mm) below the widest portion of the profile. This required depth shall continue for not less than $^3/_8$ inch (10 mm) to a level that is not less than $1^3/_4$ inches (45 mm) below the tallest portion of the profile. The width of the handrail above the recess shall be not less than $1^1/_4$ inches (32 mm) and not more than $2^3/_4$ inches (70 mm). Edges shall have a radius of not less than 0.01 inch (0.25 mm).

R311.7.8.6 Exterior plastic composite handrails. Plastic composite exterior handrails shall comply with the requirements of Section R507.2.2.

R311.7.9 Illumination. Stairways shall be provided with illumination in accordance with Sections R303.7 and R303.8.

R311.7.10 Special stairways. Spiral stairways and bulkhead enclosure stairways shall comply with the requirements of Section R311.7 except as specified in Sections R311.7.10.1 and R311.7.10.2.

R311.7.10.1 Spiral stairways. The clear width at and below the handrails at spiral stairways shall be not less than 26 inches (660 mm) and the walkline radius shall be not greater than $24^1/_2$ inches (622 mm). Each tread shall have a depth of not less than $6^3/_4$ inches (171 mm) at the walkline. Treads shall be identical, and the rise shall be not more than $9^1/_2$ inches (241 mm). Headroom shall be not less than 6 feet 6 inches (1982 mm).

R311.7.10.2 Bulkhead enclosure stairways. Stairways serving bulkhead enclosures, not part of the required building egress, providing access from the outside grade level to the basement shall be exempt from the requirements of Sections R311.3 and R311.7 where the height from the basement finished floor level to grade adjacent to the stairway is not more than 8 feet (2438 mm) and the grade level opening to the stairway is covered by a bulkhead enclosure with hinged doors or other approved means.

R311.7.11 Alternating tread devices. Alternating tread devices shall not be used as an element of a means of egress. Alternating tread devices shall be permitted provided that a required means of egress stairway or ramp serves the same space at each adjoining level or where a means of egress is not required. The clear width at and below the handrails shall be not less than 20 inches (508 mm).

Exception: Alternating tread devices are allowed to be used as an element of a means of egress for lofts, mezzanines and similar areas of 200 gross square feet (18.6 m^2) or less where such devices do not provide exclusive access to a kitchen or bathroom.

R311.7.11.1 Treads of alternating tread devices. Alternating tread devices shall have a tread depth of not less than 5 inches (127 mm), a projected tread depth of not less than $8^1/_2$ inches (216 mm), a tread width of not less than 7 inches (178 mm) and a riser height of not more than $9^1/_2$ inches (241 mm). The tread depth shall be measured horizontally between the vertical planes of the foremost projections of adjacent treads. The riser height shall be measured vertically between the leading edges of adjacent treads. The riser height and tread depth provided shall result in an angle of ascent from

the horizontal of between 50 and 70 degrees (0.87 and 1.22 rad). The initial tread of the device shall begin at the same elevation as the platform, landing or floor surface.

R311.7.11.2 Handrails of alternating tread devices. Handrails shall be provided on both sides of alternating tread devices and shall comply with Sections R311.7.8.2 to R311.7.8.6. Handrail height shall be uniform, not less than 30 inches (762 mm) and not more than 34 inches (864 mm).

R311.7.12 Ships ladders. Ships ladders shall not be used as an element of a means of egress. Ships ladders shall be permitted provided that a required means of egress stairway or ramp serves the same space at each adjoining level or where a means of egress is not required. The clear width at and below the handrails shall be not less than 20 inches.

Exception: Ships ladders are allowed to be used as an element of a means of egress for lofts, mezzanines and similar areas of 200 gross square feet (18.6 m^2) or less that do not provide exclusive access to a kitchen or bathroom.

R311.7.12.1 Treads of ships ladders. Treads shall have a depth of not less than 5 inches (127 mm). The tread shall be projected such that the total of the tread depth plus the nosing projection is not less than $8^1/_2$ inches (216 mm). The riser height shall be not more than $9^1/_2$ inches (241 mm).

R311.7.12.2 Handrails of ships ladders. Handrails shall be provided on both sides of ships ladders and shall comply with Sections R311.7.8.2 to R311.7.8.6. Handrail height shall be uniform, not less than 30 inches (762 mm) and not more than 34 inches (864 mm).

R311.8 Ramps.

R311.8.1 Maximum slope. Ramps serving the egress door required by Section R311.2 shall have a slope of not more than 1 unit vertical in 12 units horizontal (8.3-percent slope). Other ramps shall have a maximum slope of 1 unit vertical in 8 units horizontal (12.5 percent).

Exception: Where it is technically infeasible to comply because of site constraints, ramps shall have a slope of not more than 1 unit vertical in 8 units horizontal (12.5 percent).

R311.8.2 Landings required. There shall be a floor or landing at the top and bottom of each ramp, where doors open onto ramps, and where ramps change directions. The width of the landing perpendicular to the ramp slope shall be not less than 36 inches (914 mm).

R311.8.3 Handrails required. Handrails shall be provided on not less than one side of ramps exceeding a slope of one unit vertical in 12 units horizontal (8.33-percent slope).

R311.8.3.1 Height. Handrail height, measured above the finished surface of the ramp slope, shall be not less than 34 inches (864 mm) and not more than 38 inches (965 mm).

R311.8.3.2 Grip size. Handrails on ramps shall comply with Section R311.7.8.5.

R311.8.3.3 Continuity. Handrails where required on ramps shall be continuous for the full length of the ramp. Handrail ends shall be returned or shall terminate in newel posts or safety terminals. Handrails adjacent to a wall shall have a space of not less than $1^1/_2$ inches (38 mm) between the wall and the handrails.

SECTION R312
GUARDS AND WINDOW FALL PROTECTION

R312.1 Guards. Guards shall be provided in accordance with Sections R312.1.1 through R312.1.4.

R312.1.1 Where required. Guards shall be provided for those portions of open-sided walking surfaces, including stairs, ramps and landings, that are located more than 30 inches (762 mm) measured vertically to the floor or grade below at any point within 36 inches (914 mm) horizontally to the edge of the open side. Insect screening shall not be considered as a guard.

R312.1.2 Height. Required guards at open-sided walking surfaces, including stairs, porches, balconies or landings, shall be not less than *42 inches (1067 mm)* in height as measured vertically above the adjacent walking surface or the line connecting the nosings.

Exceptions:

1. Guards on the open sides of stairs shall have a height of not less than 34 inches (864 mm) measured vertically from a line connecting the nosings.
2. Where the top of the guard serves as a handrail on the open sides of stairs, the top of the guard shall be not less than 34 inches (864 mm) and not more than 38 inches (965 mm) as measured vertically from a line connecting the nosings.

R312.1.3 Opening limitations. Required guards shall not have openings from the walking surface to the required guard height that allow passage of a sphere 4 inches (102 mm) in diameter.

Exceptions:

1. The triangular openings at the open side of stair, formed by the riser, tread and bottom rail of a guard, shall not allow passage of a sphere 6 inches (153 mm) in diameter.
2. Guards on the open side of stairs shall not have openings that allow passage of a sphere $4^3/_8$ inches (111 mm) in diameter.

R312.1.4 Exterior plastic composite guards. Plastic composite exterior guards shall comply with the requirements of Section R317.4.

R312.2 Window fall protection. Window fall protection shall be provided in accordance with Sections R312.2.1 and R312.2.2.

R312.2.1 Window sills. In dwelling units, where the top of the sill of an operable window opening is located less than 24 inches (610 mm) above the finished floor and greater than 72 inches (1829 mm) above the finished grade or other surface below on the exterior of the building, the operable window shall comply with one of the following:

1. Operable window openings will not allow a 4-inch-diameter (102 mm) sphere to pass through where the openings are in their largest opened position.
2. Operable windows are provided with window fall prevention devices that comply with ASTM F2090.
3. Operable windows are provided with window opening control devices that comply with Section R312.2.2.

R312.2.2 Window opening control devices. Window opening control devices shall comply with ASTM F2090. The window opening control device, after operation to release the control device allowing the window to fully open, shall not reduce the net clear opening area of the window unit to less than the area required by Section R310.2.1.

SECTION R313
AUTOMATIC FIRE SPRINKLER SYSTEMS

R313.1 Townhouse automatic fire sprinkler systems. An automatic residential fire sprinkler system shall be installed in townhouses.

Exception: An automatic residential fire sprinkler system shall not be required where additions or alterations are made to existing townhouses that do not have an automatic residential fire sprinkler system installed.

R313.1.1 Design and installation. Automatic residential fire sprinkler systems for townhouses shall be designed and installed in accordance with Section *R313.3* or NFPA 13D.

R313.2 One- and two-family dwellings automatic fire sprinkler systems. An automatic residential fire sprinkler system shall be installed in one- and two-family dwellings.

1. An automatic residential fire sprinkler system shall not be required for additions or alterations to existing buildings that are not already provided with an automatic residential sprinkler system.

2. Accessory Dwelling Unit, provided that all of the following are met:

2.1. The unit meets the definition of an Accessory Dwelling Unit as defined in the Government Code Section 65852.2.

2.2. The existing primary residence does not have automatic fire sprinklers.

2.3. The accessory detached dwelling unit does not exceed 1,200 square feet in size.

2.4. The unit is on the same lot as the primary residence.

R313.2.1 Design and installation. Automatic residential fire sprinkler systems shall be designed and installed in accordance with Section *R313* or NFPA 13D.

***R313.3* Dwelling unit fire sprinkler systems.**

***R313.3.1* General.** The design and installation of residential fire sprinkler systems shall be in accordance with NFPA 13D or Section *R313.3*, which shall be considered equivalent to NFPA 13D. Partial residential sprinkler systems shall be permitted to be installed only in buildings not required to be equipped with a residential sprinkler system. Section *R313.3* shall apply to stand-alone and multipurpose wet-pipe sprinkler systems that do not include the use of antifreeze. A multipurpose fire sprinkler system shall supply domestic water to both fire sprinklers and plumbing fixtures. A stand-alone sprinkler system shall be separate and independent from the water distribution system.

R313.3.1.1 Backflow protection. *A backflow preventer shall not be required to separate a sprinkler system from the water distribution system, provided that:*

1. The system complies with NFPA 13D or Section R313;
2. Piping materials are suitable for potable water in accordance with the California Plumbing Code; and
3. The system does not contain antifreeze or have a fire department connection.

***R313.3.1.2* Required sprinkler locations.** Sprinklers shall be installed to protect all areas of a dwelling unit.

Exceptions:

1. Attics, crawl spaces and normally unoccupied concealed spaces that do not contain fuel-fired appliances do not require sprinklers. In attics, crawl spaces and normally unoccupied concealed spaces that contain fuel-fired equipment, a sprinkler shall be installed above the equipment; however, sprinklers shall not be required in the remainder of the space.
2. Clothes closets, linen closets and pantries not exceeding 24 square feet (2.2 m^2) in area, with the smallest dimension not greater than 3 feet (915 mm) and having wall and ceiling surfaces of gypsum board.
3. Bathrooms not more than 55 square feet (5.1 m^2) in area.
4. Detached garages; carports with no habitable space above; open attached porches; unheated entry areas, such as mud rooms, that are adjacent to an exterior door; and similar areas.

***R313.3.2* Sprinklers.** Sprinklers shall be new listed residential sprinklers and shall be installed in accordance with the sprinkler manufacturer's installation instructions.

***R313.3.2.1* Temperature rating and separation from heat sources.** Except as provided for in Section *R313.3.2.2*, sprinklers shall have a temperature rating of not less than 135°F (57°C) and not more than 170°F (77°C). Sprinklers shall be separated from heat sources as required by the sprinkler manufacturer's installation instructions.

***R313.3.2.2* Intermediate temperature sprinklers.** Sprinklers shall have an intermediate temperature rating not less than 175°F (79°C) and not more than 225°F (107°C) where installed in the following locations:

1. Directly under skylights, where the sprinkler is exposed to direct sunlight.
2. In attics.
3. In concealed spaces located directly beneath a roof.
4. Within the distance to a heat source as specified in Table R313.3.2.2.

TABLE *R313.3.2.2*
LOCATIONS WHERE INTERMEDIATE TEMPERATURE SPRINKLERS ARE REQUIRED

HEAT SOURCE	*RANGE OF DISTANCE FROM HEAT SOURCE WITHIN WHICH INTERMEDIATE TEMPERATURE SPRINKLERS ARE REQUIRED[a,b] (inches)*
Fireplace, side of open or recessed fireplace	*12 to 36*
Fireplace, front of recessed fireplace	*36 to 60*
Coal and wood burning stove	*12 to 42*
Kitchen range top	*9 to 18*
Oven	*9 to 18*
Vent connector or chimney connector	*9 to 18*
Heating duct, not insulated	*9 to 18*
Hot water pipe, not insulated	*6 to 12*
Side of ceiling or wall warm air register	*12 to 24*
Front of wall mounted warm air register	*18 to 36*
Water heater, furnace or boiler	*3 to 6*
Luminaire up to 250 watts	*3 to 6*
Luminaire 250 watts up to 499 watts	*6 to 12*

For SI: 1 inch = 25.4 mm.

a. Sprinklers shall not be located at distances less than the minimum table distance unless the sprinkler listing allows a lesser distance.

b. Distances shall be measured in a straight line from the nearest edge of the heat source to the nearest edge of the sprinkler.

***R313.3.2.3* Freezing areas.** Piping shall be protected from freezing as required by the *California Plumbing Code*. Where sprinklers are required in areas that are subject to freezing, dry-sidewall or dry-pendent sprinklers extending from a nonfreezing area into a freezing area shall be installed. *Where fire sprinkler piping cannot be adequately protected against freezing, the system shall be designed and installed in accordance with NFPA 13D.*

***R313.3.2.4* Sprinkler coverage.** Sprinkler coverage requirements and sprinkler obstruction requirements shall be in accordance with Sections *R313.3.2.4.1* and *R313.3.2.4.2*.

***R313.3.2.4.1* Coverage area limit.** The area of coverage of a single sprinkler shall not exceed 400 square feet (37 m^2) and shall be based on the sprinkler listing and the sprinkler manufacturer's installation instructions.

***R313.3.2.4.2* Obstructions to coverage.** Sprinkler discharge shall not be blocked by obstructions unless additional sprinklers are installed to protect the obstructed area. Additional sprinklers shall not be required where the sprinkler separation from obstructions complies with either the minimum distance indicated in Figure *R313.3.2.4.2* or the minimum distances specified in the sprinkler manufacturer's instructions where the manufacturer's instructions permit a lesser distance.

***R313.3.2.4.2.1* Additional requirements for pendent sprinklers.** Pendent sprinklers within 3 feet (915 mm) of the center of a ceiling fan, surface- mounted ceiling luminaire or similar object shall be considered to be obstructed, and additional sprinklers shall be installed.

***R313.3.2.4.2.2* Additional requirements for sidewall sprinklers.** Sidewall sprinklers within 5 feet (1524 mm) of the center of a ceiling fan, surface-mounted ceiling luminaire or similar object shall be considered to be obstructed, and additional sprinklers shall be installed.

***R313.3.2.5* Sprinkler installation on systems assembled with solvent cement.** The solvent cementing of threaded adapter fittings shall be completed and threaded adapters for sprinklers shall be verified as being clear of excess cement prior to the installation of sprinklers on systems assembled with solvent cement.

***R313.3.2.6* Sprinkler modifications prohibited.** Painting, caulking or modifying of sprinklers shall be prohibited. Sprinklers that have been painted, caulked, modified or damaged shall be replaced with new sprinklers.

***R313.3.3* Sprinkler piping system.** Sprinkler piping shall be supported in accordance with the requirements for cold water distribution piping. Sprinkler piping shall comply with all requirements for cold water distribution piping. For multipurpose piping systems, the sprinkler piping shall connect to and be a part of the cold water distribution piping system.

Exception: For plastic piping, it shall be permissible to follow the manufacturer's installation instructions.

PENDANT SPRINKLER TO SIDE OBSTRUCTION

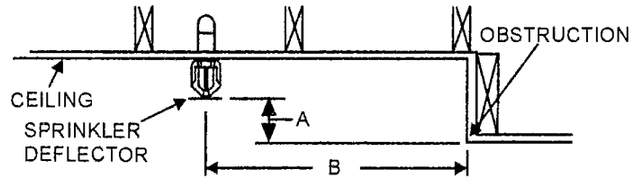

WHERE "A" IS LESS THAN OR EQUAL TO: (INCHES)	"B" MUST BE NOT LESS THAN: (FEET)
1	1½
3	3
5	4
7	4½
9	6
11	6½
14	7

SIDEWALL SPRINKLER TO SIDE OBSTRUCTION

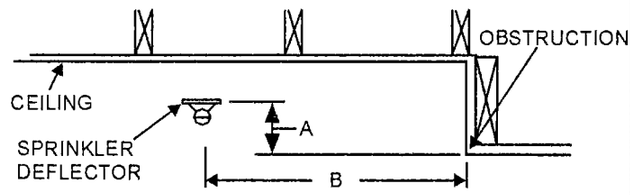

WHERE "A" IS LESS THAN OR EQUAL TO: (INCHES)	"B" MUST BE NOT LESS THAN: (FEET)
1	1½
3	3
5	4
7	4½
9	6
11	6½
14	7

SIDEWALL SPRINKLER TO FORWARD OBSTRUCTION

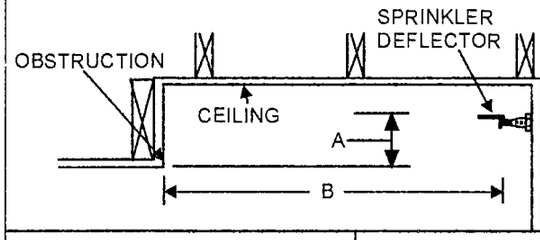

WHERE "A" IS LESS THAN OR EQUAL TO: (INCHES)	"B" MUST BE NOT LESS THAN: (FEET)
1	8
2	10
3	11
4	12
6	13
7	14
9	15
11	16
14	17

For SI: 1 inch = 25.4 mm, 1 foot = 304.8 mm.

FIGURE *R313.3.2.4.2*
MINIMUM ALLOWABLE DISTANCE BETWEEN SPRINKLER AND OBSTRUCTION

R313.3.3.1 **Nonmetallic pipe and tubing.** Nonmetallic pipe and tubing, such as CPVC, PEX, and PE-RT shall be listed for use in residential fire sprinkler systems.

R313.3.3.1.1 **Nonmetallic pipe protection.** Nonmetallic pipe and tubing systems shall be protected from exposure to the living space by a layer of not less than $^3/_8$ inch (9.5 mm) thick gypsum wallboard, $^1/_2$ inch thick plywood (13 mm), or other material having a 15 minute fire rating.

Exceptions:

1. Pipe protection shall not be required in areas that do not require protection with sprinklers as specified in Section *R313.3.1.2*.
2. Pipe protection shall not be required where exposed piping is permitted by the pipe listing.

R313.3.3.2 **Shutoff valves prohibited.** With the exception of shutoff valves for the entire water distribution system, valves shall not be installed in any location where the valve would isolate piping serving one or more sprinklers.

R313.3.3.3 **Single dwelling limit.** Piping beyond the service valve located at the beginning of the water distribution system shall not serve more than one dwelling.

R313.3.3.4 **Drain.** A means to drain the sprinkler system shall be provided on the system side of the water distribution shutoff valve.

R313.3.4 **Determining system design flow.** The flow for sizing the sprinkler piping system shall be based on the flow rating of each sprinkler in accordance with Section *R313.3.4.1* and the calculation in accordance with Section *R313.3.4.2*.

R313.3.4.1 **Determining required flow rate for each sprinkler.** The minimum required flow for each sprinkler shall be determined using the sprinkler manufacturer's published data for the specific sprinkler model based on all of the following:

1. The area of coverage.
2. The ceiling configuration.
3. The temperature rating.
4. Any additional conditions specified by the sprinkler manufacturer.

R313.3.4.2 **System design flow rate.** The design flow rate for the system shall be based on the following:

1. The design flow rate for a room having only one sprinkler shall be the flow rate required for that sprinkler, as determined by Section *R313.3.4.1*.
2. The design flow rate for a room having two or more sprinklers a shall be determined by identifying the sprinkler in that room with the highest required flow rate, based on Section *R313.3.4.1*, and multiplying that flow rate by 2.
3. Where the sprinkler manufacturer specifies different criteria for ceiling configurations that are not smooth, flat and horizontal, the required flow rate for that room shall comply with the sprinkler manufacturer's instructions.
4. The design flow rate for the sprinkler system shall be the flow required by the room with the largest flow rate, based on Items 1, 2 and 3.
5. For the purpose of this section, it shall be permissible to reduce the design flow rate for a room by subdividing the space into two or more rooms, where each room is evaluated separately with respect to the required design flow rate. Each room shall be bounded by walls and a ceiling. Openings in walls shall have a lintel not less than 8 inches (203 mm) in depth and each lintel shall form a solid barrier between the ceiling and the top of the opening.

R313.3.5 **Water supply.** The water supply shall provide not less than the required design flow rate for sprinklers in accordance with Section *R313.3.4.2* at a pressure not less than that used to comply with Section *R313.3.6. Where a water supply serves both domestic and fire sprinkler systems, 5 gpm (19 L/min) shall be added to the sprinkler system demand at the point where the systems are connected, to determine the size of common piping and the size of the total water supply requirements where no provision is made to prevent flow into the domestic water system upon operation of a sprinkler. For multipurpose piping systems, the 5 gpm (19 L/min) demand shall be added at the domestic connection nearest the design area. This demand may be split between two domestic connections at 2.5 gpm (10 L/min) each.*

R313.3.5.1 **Water supply from individual sources.** Where a dwelling unit water supply is from a tank system, a private well system, a pump, or a combination of these, the available water supply shall be based on the minimum pressure control setting for the pump.

R313.3.5.2 **Required capacity.** The water supply shall have the capacity to provide the required design flow rate for sprinklers for a period of time as follows:

1. Seven minutes for dwelling units one story in height and less than 2,000 square feet (186 m^2) in area. *For the purpose of determining the area of the dwelling unit, the area of attached garages and attached open carports, porches, balconies and patios shall not be included.*
2. Ten minutes for dwelling units two or more stories in height or equal to or greater than 2,000 square feet (186 m^2) in area. *For the purpose of determining the area of the dwelling unit, the area of attached garages and attached open carports, porches, balconies, and patios shall not be included.*

R313.3.5.2.1 Where a well system, a water supply tank system, a pump, or a combination thereof, is used, *the configuration for the system shall be one of the following:*

1. *The water supply shall serve both domestic and fire sprinkler systems.* Any combination of well capacity and tank storage shall be permitted to meet the capacity requirement.
2. *A stand-alone tank is permitted if the following conditions are met:*
   - 2.1. *The pump shall be connected to a 220-volt circuit breaker shared with a common household appliance (e.g., range, oven, dryer),*
   - 2.2. *The pump shall be a stainless steel 240-volt pump,*
   - 2.3. *A valve shall be provided to exercise the pump. The discharge of the exercise valve shall be piped to the tank, and*
   - 2.4. *A sign shall be provided stating "Valve must be opened monthly for 5 minutes."*
   - 2.5. *A means for automatically refilling the tank level so that the tank capacity will meet the required water supply duration in minutes shall be provided.*

R313.3.5.3 Connections to automatic fire sprinkler systems. The potable water supply to automatic fire sprinkler shall be protected against backflow by a double check backflow prevention assembly, a double check fire protection backflow prevention assembly, a reduced pressure principle backflow prevention assembly or a reduced pressure principle fire protection backflow prevention assembly.

Exception: Where permitted by Section R313.3.1.1, backflow protection for the water supply system shall not be required.

R313.3.5.3.1 Additives or nonpotable source. Where systems contain chemical additives or antifreeze, or where systems are connected to a nonpotable secondary water supply, the potable water supply shall be protected against backflow by a reduced pressure principle backflow prevention assembly or a reduced pressure principle fire protection backflow prevention assembly. Where chemical additives or antifreeze is added to only a portion of an automatic fire sprinkler or standpipe system, the reduced pressure principle fire protection backflow preventer shall be permitted to be located so as to isolate that portion of the system.

***R313.3.6* Pipe sizing.** The piping to sprinklers shall be sized for the flow required by Section *R313.3.4.2*. The flow required to supply the plumbing fixtures shall not be required to be added to the sprinkler design flow.

***R313.3.6.1* Method of sizing pipe.** Piping supplying sprinklers shall be sized using the prescriptive method in Section *R313.3.6.2* or by hydraulic calculation in accordance with NFPA 13D. The minimum pipe size from the water supply source to any sprinkler shall be $^3/_4$ inch (19 mm) nominal. Threaded adapter fittings at the point where sprinklers are attached to the piping shall be a minimum of $^1/_2$ inch (13 mm) nominal.

***R313.3.6.2* Prescriptive pipe sizing method.** Pipe shall be sized by determining the available pressure to offset friction loss in piping and identifying a piping material, diameter and length using the equation in Section *R313.3.6.2.1* and the procedure in Section *R313.3.6.2.2*.

***R313.3.6.2.1* Available pressure equation.** The pressure available to offset friction loss in the interior piping system (P_t) shall be determined in accordance with the Equation 29-1.

$$P_t = P_{sup} - PL_{svc} - PL_m - PL_d - PL_e - P_{sp}$$

(Equation 29-1)

where:

P_t = Pressure used in applying Tables *R313.3.6.2(4)* through *R313.3.6.2(9)*.

P_{sup} = Pressure available from the water supply source.

PL_{svc} = Pressure loss in the water-service pipe.

PL_m = Pressure loss in the water meter.

PL_d = Pressure loss from devices other than the water meter.

PL_e = Pressure loss associated with changes in elevation.

P_{sp} = Maximum pressure required by a sprinkler.

***R313.3.6.2.2* Calculation procedure.** Determination of the required size for water distribution piping shall be in accordance with the following procedure:

Step 1 – Determine P_{sup}
Obtain the static supply pressure that will be available from the water main from the water purveyor, or for an individual source, the available supply pressure shall be in accordance with Section *R313.3.5.1*.

Step 2 – Determine PL_{svc}
Use Table *R313.3.6.2(1)* to determine the pressure loss in the water service pipe based on the selected size of the water service.

Step 3 – Determine PL_m
Use Table *R313.3.6.2(2)* to determine the pressure loss from the water meter, based on the selected water meter size.

Step 4 – Determine PL_d
Determine the pressure loss from devices other than the water meter installed in the piping system supplying sprinklers, such as pressure-reducing valves, backflow preventers, water softeners or water filters. Device pressure losses shall be based on the device manufacturer's specifications. The flow rate used to determine pressure loss shall be the rate from Section *R313.3.4.2*, except that 5 gpm (0.3 L/S) shall be

added where the device is installed in a water-service pipe that supplies more than one dwelling. As alternative to deducting pressure loss for a device, an automatic bypass valve shall be installed to divert flow around the device when a sprinkler activates.

Step 5 – Determine PL_e

Use Table *R313.3.6.2(3)* to determine the pressure loss associated with changes in elevation. The elevation used in applying the table shall be the difference between the elevation where the water source pressure was measured and the elevation of the highest sprinkler.

Step 6 – Determine P_{sp}

Determine the maximum pressure required by any individual sprinkler based on the flow rate from Section *R313.3.4.1*. The required pressure is provided in the sprinkler manufacturer's published data for the specific sprinkler model based on the selected flow rate.

Step 7 – Calculate P_t

Using Equation 29-1, calculate the pressure available to offset friction loss in water-distribution piping between the service valve and the sprinklers.

Step 8 – Determine the maximum allowable pipe length

Use Tables *R313.3.6.2(4)* through *R313.3.6.2(9)* to select a material and size for water distribution piping. The piping material and size shall be acceptable if the developed length of pipe between the service valve and the most remote sprinkler does not exceed the maximum allowable length specified by the applicable table. Interpolation of P_t between the tabular values shall be permitted.

The maximum allowable length of piping in Tables *R313.3.6.2(4)* through *R313.3.6.2(9)* incorporates an adjustment for pipe fittings, and no additional consideration of friction losses associated with pipe fittings shall be required.

***R313.3.7* Instructions and signs.** An owner's manual for the fire sprinkler system shall be provided to the owner. A sign or valve tag shall be installed at the main shutoff valve to the water distribution system stating the following: "Warning, the water system for this home supplies fire sprinklers that require certain flows and pressures to fight a fire. Devices that restrict the flow or decrease the pressure or automatically shut off the water to the fire sprinkler system, such as water softeners, filtration systems and automatic shutoff valves, shall not be added to this system without a review of the fire sprinkler system by a fire protection specialist. Do not remove this sign."

TABLE *R313.3.6.2(1)*
WATER SERVICE PRESSURE LOSS (PL_{svc})[a, b]

FLOW RATE[c] (gpm)	3/4-INCH WATER SERVICE PRESSURE LOSS (psi)				1-INCH WATER SERVICE PRESSURE LOSS (psi)				1 1/4-INCH WATER SERVICE PRESSURE LOSS (psi)			
	Length of water service pipe (feet)				Length of water service pipe (feet)				Length of water service pipe (feet)			
	40 or less	41 to 75	76 to 100	101 to 150	40 or less	41 to 75	76 to 100	101 to 150	40 or less	41 to 75	76 to 100	101 to 150
8	5.1	8.7	11.8	17.4	1.5	2.5	3.4	5.1	0.6	1.0	1.3	1.9
10	7.7	13.1	17.8	26.3	2.3	3.8	5.2	7.7	0.8	1.4	2.0	2.9
12	10.8	18.4	24.9	NP	3.2	5.4	7.3	10.7	1.2	2.0	2.7	4.0
14	14.4	24.5	NP	NP	4.2	7.1	9.6	14.3	1.6	2.7	3.6	5.4
16	18.4	NP	NP	NP	5.4	9.1	12.4	18.3	2.0	3.4	4.7	6.9
18	22.9	NP	NP	NP	6.7	11.4	15.4	22.7	2.5	4.3	5.8	8.6
20	27.8	NP	NP	NP	8.1	13.8	18.7	27.6	3.1	5.2	7.0	10.4
22	NP	NP	NP	NP	9.7	16.5	22.3	NP	3.7	6.2	8.4	12.4
24	NP	NP	NP	NP	11.4	19.3	26.2	NP	4.3	7.3	9.9	14.6
26	NP	NP	NP	NP	13.2	22.4	NP	NP	5.0	8.5	11.4	16.9
28	NP	NP	NP	NP	15.1	25.7	NP	NP	5.7	9.7	13.1	19.4
30	NP	NP	NP	NP	17.2	NP	NP	NP	6.5	11.0	14.9	22.0
32	NP	NP	NP	NP	19.4	NP	NP	NP	7.3	12.4	16.8	24.8
34	NP	NP	NP	NP	21.7	NP	NP	NP	8.2	13.9	18.8	NP
36	NP	NP	NP	NP	24.1	NP	NP	NP	9.1	15.4	20.9	NP

For SI: 1 inch = 25.4 mm, 1 foot = 304.8 mm, 1 gallon per minute = 0.063 L/s, 1 pound per square inch = 6.895 kPa.

NP—Not permitted. Pressure loss exceeds reasonable limits.

a. Values are applicable for underground piping materials listed in the *California Plumbing Code* and are based on an SDR of 11 and a Hazen Williams C Factor of 150.

b. Values include the following length allowances for fittings: 25% length increase for actual lengths up to 100 feet and 15% length increase for actual lengths over 100 feet.

c. Flow rate from Section *R313.3.4.2*. Add 5 gpm to the flow rate required by Section *R313.3.4.2* where the water-service pipe supplies more than one dwelling.

TABLE *R313.3.6.2(2)*
MINIMUM WATER METER PRESSURE LOSS (PL_m)[a]

FLOW RATE (gallons per minute, gpm)[b]	$^5/_8$-INCH METER PRESSURE LOSS (pounds per square inch, psi)	$^3/_4$-INCH METER PRESSURE LESS (pounds per square inch, psi)	1-INCH METER PRESSURE LOSS (pounds per square inch, psi)
8	2	1	1
10	3	1	1
12	4	1	1
14	5	2	1
16	7	3	1
18	9	4	1
20	11	4	2
22	NP	5	2
24	NP	5	2
26	NP	6	2
28	NP	6	2
30	NP	7	2
32	NP	7	3
34	NP	8	3
36	NP	8	3

For SI: 1 inch = 25.4 mm, 1 pound per square inch = 6.895 kPa, 1 gallon per minute = 0.063 L/s.

NP—Not permitted unless the actual water meter pressure loss is known.

a. Table *R313.3.6.2(2)* establishes conservative values for water meter pressure loss or installations where the water meter loss is unknown. Where the actual water meter pressure loss is known, P_m shall be the actual loss.

b. Flow rate from Section *R313.3.4.2*. Add 5 gpm to the flow rate required by Section *R313.3.4.2* where the water-service pipe supplies more than one dwelling.

TABLE *R313.3.6.2(3)*
ELEVATION LOSS (PL_e)

ELEVATION (feet)	PRESSURE LOSS (psi)
5	2.2
10	4.4
15	6.5
20	8.7
25	10.9
30	13
35	15.2
40	17.4

For SI: 1 foot = 304.8 mm, 1 pound per square inch = 6.895 kPa.

TABLE *R313.3.6.2(4)*
ALLOWABLE PIPE LENGTH FOR $^3/_4$-INCH TYPE M COPPER WATER TUBING

SPRINKLER FLOW RATE[a] (gpm)	WATER DISTRIBUTION SIZE (inch)	AVAILABLE PRESSURE—P_t (psi)									
		15	20	25	30	35	40	45	50	55	60
		Allowable length of pipe from service valve to farthest sprinkler (feet)									
8	$^3/_4$	217	289	361	434	506	578	650	723	795	867
9	$^3/_4$	174	232	291	349	407	465	523	581	639	697
10	$^3/_4$	143	191	239	287	335	383	430	478	526	574
11	$^3/_4$	120	160	200	241	281	321	361	401	441	481
12	$^3/_4$	102	137	171	205	239	273	307	341	375	410
13	$^3/_4$	88	118	147	177	206	235	265	294	324	353
14	$^3/_4$	77	103	128	154	180	205	231	257	282	308
15	$^3/_4$	68	90	113	136	158	181	203	226	248	271
16	$^3/_4$	60	80	100	120	140	160	180	200	220	241
17	$^3/_4$	54	72	90	108	125	143	161	179	197	215
18	$^3/_4$	48	64	81	97	113	129	145	161	177	193
19	$^3/_4$	44	58	73	88	102	117	131	146	160	175
20	$^3/_4$	40	53	66	80	93	106	119	133	146	159
21	$^3/_4$	36	48	61	73	85	97	109	121	133	145
22	$^3/_4$	33	44	56	67	78	89	100	111	122	133
23	$^3/_4$	31	41	51	61	72	82	92	102	113	123
24	$^3/_4$	28	38	47	57	66	76	85	95	104	114
25	$^3/_4$	26	35	44	53	61	70	79	88	97	105
26	$^3/_4$	24	33	41	49	57	65	73	82	90	98
27	$^3/_4$	23	30	38	46	53	61	69	76	84	91
28	$^3/_4$	21	28	36	43	50	57	64	71	78	85
29	$^3/_4$	20	27	33	40	47	53	60	67	73	80
30	$^3/_4$	19	25	31	38	44	50	56	63	69	75
31	$^3/_4$	18	24	29	35	41	47	53	59	65	71
32	$^3/_4$	17	22	28	33	39	44	50	56	61	67
33	$^3/_4$	16	21	26	32	37	42	47	53	58	63
34	$^3/_4$	NP	20	25	30	35	40	45	50	55	60
35	$^3/_4$	NP	19	24	28	33	38	42	47	52	57
36	$^3/_4$	NP	18	22	27	31	36	40	45	49	54
37	$^3/_4$	NP	17	21	26	30	34	38	43	47	51
38	$^3/_4$	NP	16	20	24	28	32	36	40	45	49
39	$^3/_4$	NP	15	19	23	27	31	35	39	42	46
40	$^3/_4$	NP	NP	18	22	26	29	33	37	40	44

For SI: 1 inch = 25.4 mm, 1 foot = 304.8 mm, 1 pound per square inch = 6.895 kPa, 1 gallon per minute = 0.963 L/s.

NP—Not permitted

a. Flow rate from Section *R313.3.4.2*.

TABLE *R313.3.6.2(5)*
ALLOWABLE PIPE LENGTH FOR 1-INCH TYPE M COPPER WATER TUBING

SPRINKLER FLOW RATE[a] (gpm)	WATER DISTRIBUTION SIZE (inch)	AVAILABLE PRESSURE—P_t (psi)									
		15	20	25	30	35	40	45	50	55	60
		Allowable length of pipe from service valve to farthest sprinkler (feet)									
8	1	806	1075	1343	1612	1881	2149	2418	2687	2955	3224
9	1	648	864	1080	1296	1512	1728	1945	2161	2377	2593
10	1	533	711	889	1067	1245	1422	1600	1778	1956	2134
11	1	447	586	745	894	1043	1192	1341	1491	1640	1789
12	1	381	508	634	761	888	1015	1142	1269	1396	1523
13	1	328	438	547	657	766	875	985	1094	1204	1313
14	1	286	382	477	572	668	763	859	954	1049	1145
15	1	252	336	420	504	588	672	756	840	924	1008
16	1	224	298	373	447	522	596	671	745	820	894
17	1	200	266	333	400	466	533	600	666	733	799
18	1	180	240	300	360	420	479	539	599	659	719
19	1	163	217	271	325	380	434	488	542	597	651
20	1	148	197	247	296	345	395	444	493	543	592
21	1	135	180	225	270	315	360	406	451	496	541
22	1	124	165	207	248	289	331	372	413	455	496
23	1	114	152	190	228	267	305	343	381	419	457
24	1	106	141	176	211	246	282	317	352	387	422
25	1	98	131	163	196	228	261	294	326	359	392
26	1	91	121	152	182	212	243	273	304	334	364
27	1	85	113	142	170	198	226	255	283	311	340
28	1	79	106	132	159	185	212	238	265	291	318
29	1	74	99	124	149	174	198	223	248	273	298
30	1	70	93	116	140	163	186	210	233	256	280
31	1	66	88	110	132	153	175	197	219	241	263
32	1	62	83	103	124	145	165	186	207	227	248
33	1	59	78	98	117	137	156	176	195	215	234
34	1	55	74	92	111	129	148	166	185	203	222
35	1	53	70	88	105	123	140	158	175	193	210
36	1	50	66	83	100	116	133	150	166	183	199
37	1	47	63	79	95	111	126	142	158	174	190
38	1	45	60	75	90	105	120	135	150	165	181
39	1	43	57	72	86	100	115	129	143	158	172
40	1	41	55	68	82	96	109	123	137	150	164

For SI: 1 inch = 25.4 mm, 1 foot = 304.8 mm, 1 pound per square inch = 6.895 kPa, 1 gallon per minute = 0.963 L/s.

a. Flow rate from Section *R313.3.4.2*.

TABLE *R313.3.6.2(6)*
ALLOWABLE PIPE LENGTH FOR $^3/_4$-INCH CPVC PIPE

SPRINKLER FLOW RATE[a] (gpm)	WATER DISTRIBUTION SIZE (inch)	AVAILABLE PRESSURE—P_t (psi)									
		15	20	25	30	35	40	45	50	55	60
		Allowable length of pipe from service valve to farthest sprinkler (feet)									
8	$^3/_4$	348	465	581	697	813	929	1045	1161	1278	1394
9	$^3/_4$	280	374	467	560	654	747	841	934	1027	1121
10	$^3/_4$	231	307	384	461	538	615	692	769	845	922
11	$^3/_4$	193	258	322	387	451	515	580	644	709	773
12	$^3/_4$	165	219	274	329	384	439	494	549	603	658
13	$^3/_4$	142	189	237	284	331	378	426	473	520	568
14	$^3/_4$	124	165	206	247	289	330	371	412	454	495
15	$^3/_4$	109	145	182	218	254	290	327	363	399	436
16	$^3/_4$	97	129	161	193	226	258	290	322	354	387
17	$^3/_4$	86	115	144	173	202	230	259	288	317	346
18	$^3/_4$	78	104	130	155	181	207	233	259	285	311
19	$^3/_4$	70	94	117	141	164	188	211	234	258	281
20	$^3/_4$	64	85	107	128	149	171	192	213	235	256
21	$^3/_4$	58	78	97	117	136	156	175	195	214	234
22	$^3/_4$	54	71	89	107	125	143	161	179	197	214
23	$^3/_4$	49	66	82	99	115	132	148	165	181	198
24	$^3/_4$	46	61	76	91	107	122	137	152	167	183
25	$^3/_4$	42	56	71	85	99	113	127	141	155	169
26	$^3/_4$	39	52	66	79	92	105	118	131	144	157
27	$^3/_4$	37	49	61	73	86	98	110	122	135	147
28	$^3/_4$	34	46	57	69	80	92	103	114	126	137
29	$^3/_4$	32	43	54	64	75	86	96	107	118	129
30	$^3/_4$	30	40	50	60	70	81	91	101	111	121
31	$^3/_4$	28	38	47	57	66	76	85	95	104	114
32	$^3/_4$	27	36	45	54	63	71	80	89	98	107
33	$^3/_4$	25	34	42	51	59	68	76	84	93	101
34	$^3/_4$	24	32	40	48	56	64	72	80	88	96
35	$^3/_4$	23	30	38	45	53	61	68	76	83	91
36	$^3/_4$	22	29	36	43	50	57	65	72	79	86
37	$^3/_4$	20	27	34	41	48	55	61	68	75	82
38	$^3/_4$	20	26	33	39	46	52	59	65	72	78
39	$^3/_4$	19	25	31	37	43	50	56	62	68	74
40	$^3/_4$	18	24	30	35	41	47	53	59	65	71

For SI: 1 inch = 25.4 mm, 1 foot = 304.8 mm, 1 pound per square inch = 6.895 kPa, 1 gallon per minute = 0.963 L/s.

a. Flow rate from Section *R313.3.4.2*.

TABLE *R313.3.6.2(7)*
ALLOWABLE PIPE LENGTH FOR 1-INCH CPVC PIPE

SPRINKLER FLOW RATE[a] (gpm)	WATER DISTRIBUTION SIZE (inch)	AVAILABLE PRESSURE—P_t (psi)									
		15	20	25	30	35	40	45	50	55	60
		Allowable length of pipe from service valve to farthest sprinkler (feet)									
8	1	1049	1398	1748	2098	2447	2797	3146	3496	3845	4195
9	1	843	1125	1406	1687	1968	2249	2530	2811	3093	3374
10	1	694	925	1157	1388	1619	1851	2082	2314	2545	2776
11	1	582	776	970	1164	1358	1552	1746	1940	2133	2327
12	1	495	660	826	991	1156	1321	1486	1651	1816	1981
13	1	427	570	712	854	997	1139	1281	1424	1566	1709
14	1	372	497	621	745	869	993	1117	1241	1366	1490
15	1	328	437	546	656	765	874	983	1093	1202	1311
16	1	291	388	485	582	679	776	873	970	1067	1164
17	1	260	347	433	520	607	693	780	867	954	1040
18	1	234	312	390	468	546	624	702	780	858	936
19	1	212	282	353	423	494	565	635	706	776	847
20	1	193	257	321	385	449	513	578	642	706	770
21	1	176	235	293	352	410	469	528	586	645	704
22	1	161	215	269	323	377	430	484	538	592	646
23	1	149	198	248	297	347	396	446	496	545	595
24	1	137	183	229	275	321	366	412	458	504	550
25	1	127	170	212	255	297	340	382	425	467	510
26	1	118	158	197	237	276	316	355	395	434	474
27	1	111	147	184	221	258	295	332	368	405	442
28	1	103	138	172	207	241	275	310	344	379	413
29	1	97	129	161	194	226	258	290	323	355	387
30	1	91	121	152	182	212	242	273	303	333	364
31	1	86	114	143	171	200	228	257	285	314	342
32	1	81	108	134	161	188	215	242	269	296	323
33	1	76	102	127	152	178	203	229	254	280	305
34	1	72	96	120	144	168	192	216	240	265	289
35	1	68	91	114	137	160	182	205	228	251	273
36	1	65	87	108	130	151	173	195	216	238	260
37	1	62	82	103	123	144	165	185	206	226	247
38	1	59	78	98	117	137	157	176	196	215	235
39	1	56	75	93	112	131	149	168	187	205	224
40	1	53	71	89	107	125	142	160	178	196	214

For SI: 1 inch = 25.4 mm, 1 foot = 304.8 mm, 1 pound per square inch = 6.895 kPa, 1 gallon per minute = 0.963 L/s.

a. Flow rate from Section *R313.3.4.2*.

TABLE *R313.3.6.2(8)*
ALLOWABLE PIPE LENGTH FOR $^3/_4$-INCH PEX AND PE-RT TUBING

SPRINKLER FLOW RATE[a] (gpm)	WATER DISTRIBUTION SIZE (Inch)	AVAILABLE PRESSURE—P_t(psi)									
		15	20	25	30	35	40	45	50	55	60
		Allowable length of pipe from service valve to farthest sprinkler (feet)									
8	$^3/_4$	93	123	154	185	216	247	278	309	339	370
9	$^3/_4$	74	99	124	149	174	199	223	248	273	298
10	$^3/_4$	61	82	102	123	143	163	184	204	225	245
11	$^3/_4$	51	68	86	103	120	137	154	171	188	205
12	$^3/_4$	44	58	73	87	102	117	131	146	160	175
13	$^3/_4$	38	50	63	75	88	101	113	126	138	151
14	$^3/_4$	33	44	55	66	77	88	99	110	121	132
15	$^3/_4$	29	39	48	58	68	77	87	96	106	116
16	$^3/_4$	26	34	43	51	60	68	77	86	94	103
17	$^3/_4$	23	31	38	46	54	61	69	77	84	92
18	$^3/_4$	21	28	34	41	48	55	62	69	76	83
19	$^3/_4$	19	25	31	37	44	50	56	62	69	75
20	$^3/_4$	17	23	28	34	40	45	51	57	62	68
21	$^3/_4$	16	21	26	31	36	41	47	52	57	62
22	$^3/_4$	NP	19	24	28	33	38	43	47	52	57
23	$^3/_4$	NP	17	22	26	31	35	39	44	48	52
24	$^3/_4$	NP	16	20	24	28	32	36	40	44	49
25	$^3/_4$	NP	NP	19	22	26	30	34	37	41	45
26	$^3/_4$	NP	NP	17	21	24	28	31	35	38	42
27	$^3/_4$	NP	NP	16	20	23	26	29	33	36	39
28	$^3/_4$	NP	NP	15	18	21	24	27	30	33	36
29	$^3/_4$	NP	NP	NP	17	20	23	26	28	31	34
30	$^3/_4$	NP	NP	NP	16	19	21	24	27	29	32
31	$^3/_4$	NP	NP	NP	15	18	20	23	25	28	30
32	$^3/_4$	NP	NP	NP	NP	17	19	21	24	26	28
33	$^3/_4$	NP	NP	NP	NP	16	18	20	22	25	27
34	$^3/_4$	NP	NP	NP	NP	NP	17	19	21	23	25
35	$^3/_4$	NP	NP	NP	NP	NP	16	18	20	22	24
36	$^3/_4$	NP	NP	NP	NP	NP	15	17	19	21	23
37	$^3/_4$	NP	NP	NP	NP	NP	NP	16	18	20	22
38	$^3/_4$	NP	NP	NP	NP	NP	NP	16	17	19	21
39	$^3/_4$	NP	NP	NP	NP	NP	NP	NP	16	18	20
40	$^3/_4$	NP	NP	NP	NP	NP	NP	NP	16	17	19

For SI: 1 inch = 25.4 mm, 1 foot = 304.8 mm, 1 pound per square inch = 6.895 kPa, 1 gallon per minute = 0.063 L/s

NP— Not permitted.

a. Flow rate from Section *R313.3.4.2*.

TABLE *R313.3.6.2(9)*
ALLOWABLE PIPE LENGTH FOR 1-INCH PEX AND PE-RT TUBING

SPRINKLER FLOW RATE[a] (gpm)	WATER DISTRIBUTION SIZE (inch)	AVAILABLE PRESSURE—P_t (psi)									
		15	20	25	30	35	40	45	50	55	60
		Allowable length of pipe from service valve to farthest sprinkler (feet)									
8	1	314	418	523	628	732	837	941	1046	1151	1255
9	1	252	336	421	505	589	673	757	841	925	1009
10	1	208	277	346	415	485	554	623	692	761	831
11	1	174	232	290	348	406	464	522	580	638	696
12	1	148	198	247	296	346	395	445	494	543	593
13	1	128	170	213	256	298	341	383	426	469	511
14	1	111	149	186	223	260	297	334	371	409	446
15	1	98	131	163	196	229	262	294	327	360	392
16	1	87	116	145	174	203	232	261	290	319	348
17	1	78	104	130	156	182	208	233	259	285	311
18	1	70	93	117	140	163	187	210	233	257	280
19	1	63	84	106	127	148	169	190	211	232	253
20	1	58	77	96	115	134	154	173	192	211	230
21	1	53	70	88	105	123	140	158	175	193	211
22	1	48	64	80	97	113	129	145	161	177	193
23	1	44	59	74	89	104	119	133	148	163	178
24	1	41	55	69	82	96	110	123	137	151	164
25	1	38	51	64	76	89	102	114	127	140	152
26	1	35	47	59	71	83	95	106	118	130	142
27	1	33	44	55	66	77	88	99	110	121	132
28	1	31	41	52	62	72	82	93	103	113	124
29	1	29	39	48	58	68	77	87	97	106	116
30	1	27	36	45	54	63	73	82	91	100	109
31	1	26	34	43	51	60	68	77	85	94	102
32	1	24	32	40	48	56	64	72	80	89	97
33	1	23	30	38	46	53	61	68	76	84	91
34	1	22	29	36	43	50	58	65	72	79	86
35	1	20	27	34	41	48	55	61	68	75	82
36	1	19	26	32	39	45	52	58	65	71	78
37	1	18	25	31	37	43	49	55	62	68	74
38	1	18	23	29	35	41	47	53	59	64	70
39	1	17	22	28	33	39	45	50	56	61	67
40	1	16	21	27	32	37	43	48	53	59	64

For SI: 1 inch = 25.4 mm, 1 foot = 304.8 mm, 1 pound per square inch = 6.895 kPa, 1 gallon per minute = 0.963 L/s.

a. Flow rate from Section *R313.3.4.2*.

R313.3.8 **Inspections.** The water distribution system shall be inspected in accordance with Sections *R313.3.8.1* and *R313.3.8.2*.

R313.3.8.1 **Preconcealment inspection.** The following items shall be verified prior to the concealment of any sprinkler system piping:

1. Sprinklers are installed in all areas as required by Section *R313.3.1.2*.
2. Where sprinkler water spray patterns are obstructed by construction features, luminaires or ceiling fans, additional sprinklers are installed as required by Section *R313.3.2.4.2*.
3. Sprinklers are the correct temperature rating and are installed at or beyond the required separation distances from heat sources as required by Sections *R313.3.2.1* and *R313.3.2.2*.
4. The pipe size equals or exceeds the size used in applying Tables *R313.3.6.2(4)* through *R313.3.6.2(9)* or, if the piping system was hydraulically calculated in accordance with Section *R313.3.6.1*, the size used in the hydraulic calculation.
5. The pipe length does not exceed the length permitted by Tables *R313.3.6.2(4)* through *R313.3.6.2(9)* or, if the piping system was hydraulically calculated in accordance with Section *R313.3.6.1*, pipe lengths and fittings do not exceed those used in the hydraulic calculation.
6. Nonmetallic piping that conveys water to sprinklers is listed for use with fire sprinklers.
7. Piping is supported in accordance with the pipe manufacturer's and sprinkler manufacturer's installation instructions.
8. The piping system is tested in accordance with the *California Plumbing Code*.

R313.3.8.2 **Final inspection.** The following items shall be verified upon completion of the system:

1. Sprinkler are not painted, damaged or otherwise hindered from operation.
2. Where a pump is required to provide water to the system, the pump starts automatically upon system water demand.
3. Pressure-reducing valves, water softeners, water filters or other impairments to water flow that were not part of the original design have not been installed.
4. The sign or valve tag required by Section *R313.3.7* is installed and the owner's manual for the system is present.

SECTION R314
SMOKE ALARMS

R314.1 General. Smoke alarms shall comply with NFPA 72 and Section R314.

R314.1.1 Listings. Smoke alarms shall be listed in accordance with UL 217. Combination smoke and carbon monoxide alarms shall be listed in accordance with UL 217 and UL 2034. *Systems and components shall be California State Fire Marshal listed and approved in accordance with California Code of Regulations, Title 19, Division 1 for the purpose for which they are installed.*

R314.2 Where required. Smoke alarms shall be provided in accordance with this section.

R314.2.1 New construction. Smoke alarms shall be provided in dwelling units.

R314.2.2 Alterations, repairs and additions. Where alterations, repairs or additions requiring a permit occur, the individual dwelling unit shall be equipped with smoke alarms located as required for new dwellings.

Exception: *See Section R314.6.*

R314.3 Location. Smoke alarms shall be installed in the following locations:

1. In each sleeping room.
2. Outside each separate sleeping area in the immediate vicinity of the bedrooms.
3. On each additional story of the dwelling, including basements and habitable attics and not including crawl spaces and uninhabitable attics. In dwellings or dwelling units with split levels and without an intervening door between the adjacent levels, a smoke alarm installed on the upper level shall suffice for the adjacent lower level provided that the lower level is less than one full story below the upper level.
4. Smoke alarms shall be installed not less than 3 feet (914 mm) horizontally from the door or opening of a bathroom that contains a bathtub or shower unless this would prevent placement of a smoke alarm required by this section.

See Section R314.3.3 for specific location requirements.

R314.3.1 Installation near cooking appliances. *See Section R314.3.3 for specific location requirements.*

R314.3.2 Smoke alarms. *Smoke alarms shall be tested and maintained in accordance with the manufacturer's instructions. Smoke alarms that no longer function shall be replaced.*

R314.3.3 Specific location requirements.
*Extract from NFPA 72 Section 29.8.3.4 Specific Location Requirements.**

This extract has been provided by NFPA as amended by the Office of the State Fire Marshal and adopted by reference as follows:

29.8.3.4 Specific location requirements. *The installation of smoke alarms and smoke detectors shall comply with the following requirements:*

(1) Smoke alarms and smoke detectors shall not be located where ambient conditions, including humidity

and temperature, are outside the limits specified by the manufacturer's published instructions.

(2) Smoke alarms and smoke detectors shall not be located within unfinished attics or garages or in other spaces where temperatures can fall below 40°F (4°C) or exceed 100°F (38°C).

(3) Where the mounting surface could become considerably warmer or cooler than the room, such as a poorly insulated ceiling below an unfinished attic or an exterior wall, smoke alarms and smoke detectors shall be mounted on an inside wall.

(4) Smoke alarms or smoke detectors shall be installed a minimum of 20 feet horizontal distance from a permanently installed cooking appliance.

***Exception:** Ionization smoke alarms with an alarm-silencing switch or Photoelectric smoke alarms shall be permitted to be installed 10 feet (3 m) or greater from a permanently installed cooking appliance.*

Photoelectric smoke alarms shall be permitted to be installed greater than 6 feet (1.8 m) from a permanently installed cooking appliance where the kitchen or cooking area and adjacent spaces have no clear interior partitions and the 10 ft distances would prohibit the placement of a smoke alarm or smoke detector required by other sections of the code. Smoke alarms listed for use in close proximity to a permanently installed cooking appliance.

(5) Installation near bathrooms. Smoke alarms shall be installed not less than a 3 foot (0.91 m) horizontal distance from the door or opening of a bathroom that contains a bathtub or shower unless this would prevent placement of a smoke alarm required by other sections of the code.

(6) Smoke alarms and smoke detectors shall not be installed within a 36 in. (910 mm) horizontal path from the supply registers of a forced air heating or cooling system and shall be installed outside of the direct airflow from those registers.

(7) Smoke alarms and smoke detectors shall not be installed within a 36 in. (910 mm) horizontal path from the tip of the blade of a ceiling-suspended (paddle) fan.

(8) Where stairs lead to other occupied levels, a smoke alarm or smoke detector shall be located so that smoke rising in the stairway cannot be prevented from reaching the smoke alarm or smoke detector by an intervening door or obstruction.

(9) For stairways leading up from a basement, smoke alarms or smoke detectors shall be located on the basement ceiling near the entry to the stairs.

(10) For tray-shaped ceilings (coffered ceilings), smoke alarms and smoke detectors shall be installed on the highest portion of the ceiling or on the sloped portion of the ceiling within 12 in. (300 mm) vertically down from the highest point.

(11) Smoke alarms and detectors installed in rooms with joists or beams shall comply with the requirements of 17.7.3.2.4.

(12) Heat alarms and detectors installed in rooms with joists or beams shall comply with the requirements of 17.6.3.

****For additional requirements or clarification see NFPA 72.***

R314.4 Interconnection. *Where more than one smoke alarm is required to be installed within an individual dwelling or sleeping unit, the smoke alarms shall be interconnected in such a manner that the activation of one alarm will activate all of the alarms in the individual unit. The alarm shall be clearly audible in all bedrooms over background noise levels with all intervening doors closed.*

Exceptions:

1. *Interconnection is not required in buildings that are not undergoing alterations, repairs or construction of any kind.*
2. *Smoke alarms in existing areas are not required to be interconnected where alterations or repairs do not result in the removal of interior wall or ceiling finishes exposing the structure, unless there is an attic, crawl space or basement available which could provide access for interconnection without the removal of interior finishes.*
3. *Smoke alarms are not required to be interconnected where repairs or alterations are limited to the exterior surfaces of dwellings, such as the replacement of roofing or siding, or the addition or replacement of windows or doors, or the addition of a porch or deck.*
4. *Smoke alarms are not required to be interconnected when work is limited to the installation, alteration or repairs of plumbing or mechanical systems or the installation, alteration or repair of electrical systems which do not result in the removal of interior wall or ceiling finishes exposing the structure.*

R314.5 Combination alarms. Combination smoke and carbon monoxide alarms shall be permitted to be used in lieu of smoke alarms. *Systems and components shall be California State Fire Marshal listed and approved in accordance with California Code of Regulations, Title 19, Division 1 for the purpose for which they are installed.*

R314.6 Power source. *Smoke alarms shall receive their primary power from the building wiring provided that such wiring is served from a commercial source and shall be equipped with a battery backup. Smoke alarms with integral strobes that are not equipped with battery backup shall be connected to an emergency electrical system. Smoke alarms shall emit a signal when the batteries are low. Wiring shall*

be permanent and without a disconnecting switch other than as required for overcurrent protection.

Exceptions:

1. *Smoke alarms are permitted to be solely battery operated in existing buildings where no construction is taking place.*
2. *Smoke alarms are permitted to be solely battery operated in buildings that are not served from a commercial power source.*
3. *Smoke alarms are permitted to be solely battery operated in existing areas of buildings undergoing alterations or repairs that do not result in the removal of interior walls or ceiling finishes exposing the structure, unless there is an attic, crawl space or basement available which could provide access for building wiring without the removal of interior finishes.*
4. *Smoke alarms are permitted to be solely battery operated where repairs or alterations are limited to the exterior surfaces of dwellings, such as the replacement of roofing or siding, or the addition or replacement of windows or doors, or the addition of a porch or deck.*
5. *Smoke alarms are permitted to be solely battery operated when work is limited to the installation, alteration or repairs of plumbing or mechanical systems or the installation, alteration or repair of electrical systems which do not result in the removal of interior wall or ceiling finishes exposing the structure.*

R314.7 Fire alarm systems. Fire alarm systems shall be permitted to be used in lieu of smoke alarms and shall comply with Sections R314.7.1 through R314.7.4.

R314.7.1 General. Fire alarm systems shall comply with the provisions of this code and the household fire warning equipment provisions of NFPA 72. Smoke detectors shall be listed in accordance with UL 268. *Systems and components shall be California State Fire Marshal listed and approved in accordance with California Code of Regulations, Title 19, Division 1 for the purpose for which they are installed.*

R314.7.2 Location. Smoke detectors shall be installed in the locations specified in Section R314.3.

R314.7.3 Permanent fixture. Where a household fire alarm system is installed, it shall become a permanent fixture of the occupancy, owned by the homeowner.

R314.7.4 Combination detectors. Combination smoke and carbon monoxide detectors shall be permitted to be installed in fire alarm systems in lieu of smoke detectors, provided that they are listed in accordance with UL 268 and UL 2075.

R314.8 Existing Group R-3 occupancies.

R314.8.1 *Existing buildings housing Group R-3 occupancies established prior to the effective date of these regulations may have their use continued if they conform or are made to conform to provisions of these regulations to the extent that reasonable and adequate life safety against the hazards of fire, panic and explosion is substantially provided. Additional means of egress, the installation of automatic sprinkler systems, automatic fire alarm system or other life safety measures, may be required to provide reasonable and adequate safety.*

Note: *It is the intent of this section that every existing occupancy need not mandatorily conform with the requirements for new construction. Reasonable judgment in the application of requirements must be exercised by the enforcing agency.*

R314.8.2 *For purposes of clarification, Health and Safety Code Section 13113.7 is repeated.*

a. *Except as otherwise provided in this section, a smoke detector, approved and listed by the State Fire Marshal pursuant to Section 13114, shall be installed, in accordance with the manufacturer's instructions in each dwelling intended for human occupancy within the earliest applicable time period as follows:*

   1. *For all dwelling units intended for human occupancy, upon the owner's application on or after January 1, 1985, for a permit for alterations, repairs, or additions, exceeding one thousand dollars ($1,000).*
   2. *For all other dwelling units intended for human occupancy on or after January 1, 1987.*

   However, if any local rule, regulation, or ordinance, adopted prior to the compliance dates specified in paragraphs (1) and (2) requires installation in a dwelling unit intended for human occupancy of smoke detector, which receive their power from the electrical system of the building and requires compliance with the local rule, regulation, or ordinance at a date subsequent to the dates specified in this section, the compliance date specified in the rule, regulation, or ordinance shall, but only with respect to the dwelling units specified in this section, take precedence over the dates specified in this section.

   The State Fire Marshal may adopt regulations exempting dwellings intended for human occupancy with fire sprinkler systems from the provisions of this section, if he or she determines that a smoke detector is not reasonably necessary for fire safety in the occupancy.

   Unless prohibited by local rules, regulations, or ordinances, a battery-operated smoke detector which otherwise meets the standards adopted pursuant to Section 13114 for smoke detectors, satisfies the requirements of this section.

b. *"Dwelling units intended for human occupancy," as used in this section, includes a duplex, lodging*

house, apartment complex, hotel, motel, condominium, stock cooperative, time-share project, or dwelling unit of a multiple-unit dwelling complex. For the purpose of this part, "dwelling units intended for human occupancy" does not include manufactured homes as defined in Section 18007, mobile homes as defined in Section 18008, and commercial coaches as defined in Section 18001.8.

c. *The owner of each dwelling unit subject to this section shall supply and install smoke detectors required by this section in the locations and in the manner set forth in the manufacturer's instructions, as approved by the State Fire Marshal's regulations. In the case of apartment complexes and other multiple- dwelling complexes, a smoke detector shall be installed in the common stairwells. All fire alarm warning systems supplemental to the smoke detector shall also be listed by the State Fire Marshal.*

d. *A high-rise structure, as defined in subdivision (b) of Section 13210 and regulated by Chapter 3 (commencing with Section 13210), and which is used for purposes other than as dwelling units intended for human occupancy, is exempt from the requirements of this section.*

e. *The owner shall be responsible for testing and maintaining detectors in hotels, motels, lodging houses, and common stairwells of apartment complexes and other multiple-dwelling complexes.*

An owner or the owner's agent may enter any dwelling unit, efficiency dwelling unit, guest room, and suite owned by the owner for the purpose of installing, repairing, testing, and maintaining single station smoke detectors required by this section. Except in cases of emergency, the owner or owner's agent shall give the tenants of each such unit, room, or suite reasonable notice in writing of the intention to enter and shall enter only during normal business hours. Twenty-four hours shall be presumed to be reasonable notice in absence of evidence to the contrary.

The smoke detector shall be operable at the time that the tenant takes possession. The apartment complex tenant shall be responsible for notifying the manager or owner if the tenant becomes aware of an inoperable smoke detector within his or her unit. The owner or authorized agent shall correct any reported deficiencies in the smoke detector and shall not be in violation of this section for a deficient smoke detector when he or she has not received notice of the deficiency.

f. *A violation of this section is an infraction punishable by a maximum fine of two hundred dollars ($200) for each offense.*

g. *This section shall not affect any rights which the parties may have under any other provision of law because of the presence or absence of a smoke detector.*

h. *This section shall not apply to the installation of smoke detectors in single-family dwellings or factory-built housing which is regulated by Section 13113.8, as added by Assembly Bill No. 2285 of the 1983-84 Regular Session.*

R314.8.3 For purposes of clarification, *Health and Safety Code Section 13113.8 is repeated.*

a. *On and after January 1, 1986, every single-family dwelling and factory-built housing, as defined in Section 19971, which is sold shall have an operable smoke detector. The detector shall be approved and listed by the State Fire Marshal and installed in accordance with the State Fire Marshal's regulations. Unless prohibited by local rules, regulations, or ordinances, a battery-operated smoke detector shall be deemed to satisfy the requirements of this section.*

b. *On and after January 1, 1986, the transferor of any real property containing a single-family dwelling, as described in subdivision (a), whether the transfer is made by sale, exchange, or real property sales contract, as defined in Section 2985 of the Civil Code, shall deliver to the transferee a written statement indicating that the transferor is in compliance with this section. The disclosure statement shall be either included in the receipt for deposit in a real estate transaction, an addendum attached thereto, or a separate document.*

c. *The transferor shall deliver the statement referred to in subdivision (b) as soon as practicable before the transfer of title in the case of a sale or exchange, or prior to execution of the contract where the transfer is by a real property sales contract, as defined in Section 2985. For purposes of this subdivision, "delivery" means delivery in person or by mail to the transferee or transferor, or to any person authorized to act for him or her in the transaction, or to additional transferees who have requested delivery from the transferor in writing. Delivery to the spouse of a transferee or transferor shall be deemed delivery to a transferee or transferor, unless the contract states otherwise.*

d. *This section does not apply to any of the following:*

   1. *Transfers which are required to be preceded by the furnishing to a prospective transferee of a copy of a public report pursuant to Section 11018.1 of the Business and Professions Code.*

   2. *Transfers pursuant to court order, including, but not limited to, transfers ordered by a probate court in the administration of an estate, transfers pursuant to a writ of execution, transfers by a trustee in bankruptcy, transfers by eminent domain, or transfers resulting from a decree for specific performance.*

   3. *Transfers to a mortgagee by a mortgagor in default, transfers to a beneficiary of a deed of*

trust by a trustor in default, transfers by any foreclosure sale after default, transfers by any foreclosure sale after default in an obligation secured by a mortgage, or transfers by a sale under a power of sale after a default in an obligation secured by a deed of trust or secured by any other instrument containing a power of sale.

4. *Transfers by a fiduciary in the course of the administration of a decedent's estate, guardianship, conservatorship, or trust.*
5. *Transfers from one co-owner to one or more co-owners.*
6. *Transfers made to a spouse, or to a person or persons in the lineal line of consanguinity of one or more of the transferors.*
7. *Transfers between spouses resulting from a decree of dissolution of a marriage, from a decree of legal separation, or from a property settlement agreement incidental to either of those decrees.*
8. *Transfers by the Controller in the course of administering the Unclaimed Property Law provided for in Chapter 7 (commencing with Section 1500) of Title 10 of Part 3 of the Code of Civil Procedure.*
9. *Transfers under the provisions of Chapter 7 (commencing with Section 3691) or Chapter 8 (commencing with Section 3771) of Part 6 of Division 1 of the Revenue and Taxation Code.*

e. No liability shall arise, nor any action be brought or maintained against, any agent of any party to a transfer of title, including any person or entity acting in the capacity of an escrow, for any error, inaccuracy, or omission relating to the disclosure required to be made by a transferor pursuant to this section. However, this subdivision does not apply to a licensee, as defined in Section 10011 of the Business and Professions Code, where the licensee participates in the making of the disclosure required to be made pursuant to this section with actual knowledge of the falsity of the disclosure.

f. Except as otherwise provided in this section, this section shall not be deemed to create or imply a duty upon a licensee, as defined in Section 10011 of the Business and Professions Code, or upon any agent of any party to a transfer of title, including any person or entity acting in the capacity of an escrow, to monitor or ensure compliance with this section.

g. No transfer of title shall be invalidated on the basis of a failure to comply with this section, and the exclusive remedy for the failure to comply with this section is an award of actual damages not to exceed one hundred dollars ($100), exclusive of any court costs and attorney's fees.

h. Local ordinances requiring smoke detectors in single-family dwellings may be enacted or amended. However, the ordinances shall satisfy the minimum requirements of this section.

i. For the purposes of this section, "single-family dwelling" does not include a manufactured home as defined in Section 18007, a mobilehome as defined in Section 18008, or a commercial coach as defined in Section 18001.8.

j. This section shall not apply to the installation of smoke detectors in dwellings intended for human occupancy, as defined in and regulated by Section 13113.7 of the Health and Safety Code, as added by Senate Bill No. 1448 in the 1983-84 Regular Session.

SECTION R315
CARBON MONOXIDE ALARMS

R315.1 General. Carbon monoxide alarms shall comply with Section R315.

R315.1.1 Listings. Carbon monoxide alarms shall be listed in accordance with UL 2034. Combination carbon monoxide and smoke alarms shall be listed in accordance with UL 2034 and UL 217.

No person shall install, market, distribute, offer for sale, or sell any carbon monoxide device in the State of California unless the device and instructions have been approved and listed by the Office of the State Fire Marshal.

R315.2 Where required. Carbon monoxide alarms shall be provided in accordance with Sections R315.2.1 and R315.2.2.

Pursuant to Health and Safety Code Section 17926, carbon monoxide devices shall be installed in all existing dwelling units as required in this section.

R315.2.1 *Existing buildings and* new construction. For *existing buildings and* new construction, carbon monoxide alarms shall be provided in dwelling units where either or both of the following conditions exist.

1. The dwelling unit contains a fuel-fired appliance *or fireplace.*
2. The dwelling unit has an attached garage with an opening that communicates with the dwelling unit.

R315.2.2 Alterations, repairs and additions. *Where an addition is made to an existing dwelling, or a fuel-burning heater, appliance, or fireplace is added to an existing dwelling, not previously required to be provided with carbon monoxide alarms, new carbon monoxide alarms shall be installed in accordance with Section R315.*

Exceptions:

1. Work involving the exterior surfaces of dwellings, such as the replacement of roofing or siding, or the addition or replacement of windows or doors, or the addition of a porch or deck.
2. Installation, alteration or repairs of plumbing or mechanical systems.

R315.3 Location. Carbon monoxide alarms in dwelling units shall be installed *and maintained in accordance with the manufacturer's published instructions in the following locations:*

1. Outside of each separate sleeping area in the immediate vicinity of the bedrooms.
2. *On every occupiable level of a dwelling unit, including basements.*
3. Where a fuel-burning appliance is located within a bedroom or its attached bathroom, a carbon monoxide alarm shall be installed within the bedroom.

R315.4 Combination alarms. Combination carbon monoxide and smoke alarms shall be permitted to be used in lieu of carbon monoxide alarms.

Combination carbon monoxide/smoke alarms shall comply with Section R315 and all requirements for listing and approval by the Office of the State Fire Marshal for smoke alarms.

R315.5 Interconnectivity. Where more than one carbon monoxide alarm is required to be installed within an individual dwelling unit in accordance with Section R315.3, the alarm devices shall be interconnected in such a manner that the actuation of one alarm will activate all of the alarms in the individual dwelling unit. Physical interconnection of carbon monoxide alarms shall not be required where listed wireless alarms are installed and all alarms sound upon activation of one alarm.

Exception: Interconnection of carbon monoxide alarms in existing *buildings prior to January 1, 2011*, shall not be required *under any of the following conditions*:

1. *Where* alterations or repairs do not result in removal of interior wall or ceiling finishes exposing the structure, unless there is an attic, crawl space or basement available that could provide access for interconnection without the removal of interior finishes.
2. *No construction is taking place.*
3. *Repairs or alterations are limited to the exterior surfaces of dwellings, such as the replacement of roofing or siding, or the addition or replacement of windows or doors, or the addition of a porch or deck.*
4. *Work is limited to the installation, alteration or repair of plumbing, mechanical, or electrical systems, which do not result in the removal of interior wall or ceiling finishes exposing the structure in areas/spaces where carbon monoxide alarms are required.*

R315.6 Power source. Carbon monoxide alarms shall receive their primary power from the building wiring where such wiring is served from a commercial source and, where primary power is interrupted, shall receive power from a battery. Wiring shall be permanent and without a disconnecting switch other than those required for overcurrent protection.

Exceptions:

1. Carbon monoxide alarms shall be permitted to be battery operated where installed in buildings without commercial power.
2. Carbon monoxide alarms installed in accordance with Section R315.2.2 shall be permitted to be battery powered.
3. *Carbon monoxide alarms in Group R occupancies shall be permitted to receive their primary power from other power sources recognized for use by NFPA 720.*
4. *Carbon monoxide alarms in Group R occupancies shall be permitted to be battery-powered or plug-in with a battery backup in existing buildings built prior to January 1, 2011, under any of the following conditions:*
   - *4.1. No construction is taking place.*
   - *4.2. Repairs or alterations do not result in the removal of interior wall and ceiling finishes exposing the structure in areas/spaces where carbon monoxide alarms are required.*
   - *4.3. Repairs or alterations are limited to the exterior surfaces of dwellings, such as the replacement of roofing or siding, or the addition or replacement of windows or doors, or the addition of a porch or deck.*
   - *4.4. Work is limited to the installation, alteration or repair of plumbing, mechanical or electrical systems, which do not result in the removal of interior wall or ceiling finishes exposing the structure in areas/spaces where carbon monoxide alarms are required.*

R315.7 Carbon monoxide detection systems. Carbon monoxide detection systems shall be permitted to be used in lieu of carbon monoxide alarms and shall comply with Sections R315.7.1 through R315.7.4.

R315.7.1 General. Household carbon monoxide detection systems shall comply with NFPA 720. Carbon monoxide detectors shall be listed in accordance with UL 2075.

R315.7.2 Location. Carbon monoxide detectors shall be installed *and maintained* in the locations specified in Section R315.3 or NFPA 720.

R315.7.3 Permanent fixture. Where a household carbon monoxide detection system is installed, it shall become a permanent fixture of the occupancy and owned by the homeowner.

R315.7.4 Combination detectors. Combination carbon monoxide and smoke detectors installed in carbon monoxide detection systems in lieu of carbon monoxide detectors shall be listed in accordance with UL 2075 and UL 268.

Combination carbon monoxide/smoke detectors shall comply with all requirements for listing and approval by the Office of the State Fire Marshal for smoke alarms.

SECTION R316
FOAM PLASTIC

R316.1 General. The provisions of this section shall govern the materials, design, application, construction and installation of foam plastic materials.

R316.2 Labeling and identification. Packages and containers of foam plastic insulation and foam plastic insulation components delivered to the job site shall bear the label of an approved agency showing the manufacturer's name, the product listing, product identification and information sufficient to determine that the end use will comply with the requirements.

R316.2.1 Labeling of polystyrene foam insulation without flame retardants. *In addition to the requirements of Section 2603.2 of the California Building Code, polystyrene foam insulation boards manufactured with no flame retardants added shall be labeled in accordance with this section.*

1. *Each board shall be labeled on each face every 8 square feet in red $^1/_2$-inch text with the following information:*

   WARNING – FIRE HAZARD
   This product is required to be installed below a minimum 3.5-inch thick concrete slab on grade

   NOT FOR VERTICAL OR ABOVE GRADE APPLICATIONS
   This product contains NO flame retardants. Not tested for flame spread or smoke development requirements of the model building codes.

2. *Each package shall be labeled on at least two sides in red $^1/_2$-inch text with the following information:*

   WARNING – COMBUSTIBLE MATERIAL
   Keep away from ignition sources. Maintain code-required separation between product storage and structures under construction (minimum 30 feet).

R316.3 Surface burning characteristics. Unless otherwise allowed in Section R316.5, foam plastic, or foam plastic cores used as a component in manufactured assemblies, used in building construction shall have a flame spread index of not more than 75 and shall have a smoke-developed index of not more than 450 when tested in the maximum thickness and density intended for use in accordance with ASTM E84 or UL 723. Loose-fill-type foam plastic insulation shall be tested as board stock for the flame spread index and smoke-developed index.

Exceptions:

1. Foam plastic insulation more than 4 inches (102 mm) thick shall have a flame spread index of not more than 75 and a smoke-developed index of not more than 450 where tested at a thickness of not more than 4 inches (102 mm), provided that the end use is approved in accordance with Section R316.6 using the thickness and density intended for use.
2. *Polystyrene foam insulation boards with a maximum thickness of 2 inches where installed below a minimum 3.5-inch thick concrete slab on grade.*

R316.4 Thermal barrier. Unless otherwise allowed in Section R316.5, foam plastic shall be separated from the interior of a building by an approved thermal barrier of not less than $^1/_2$-inch (12.7 mm) gypsum wallboard, $^{23}/_{32}$-inch (18.2 mm) wood structural panel or a material that is tested in accordance with and meets the acceptance criteria of both the Temperature Transmission Fire Test and the Integrity Fire Test of NFPA 275.

R316.5 Specific requirements. The following requirements shall apply to these uses of foam plastic unless specifically approved in accordance with Section R316.6 or by other sections of the code or the requirements of Sections R316.2 through R316.4 have been met.

R316.5.1 Masonry or concrete construction. The thermal barrier specified in Section R316.4 is not required in a masonry or concrete wall, floor or roof where the foam plastic insulation is separated from the interior of the building by not less than a 1-inch (25 mm) thickness of masonry or concrete.

R316.5.2 Roofing. The thermal barrier specified in Section R316.4 is not required where the foam plastic in a roof assembly or under a roof covering is installed in accordance with the code and the manufacturer's instructions and is separated from the interior of the building by tongue-and-groove wood planks or wood structural panel sheathing, in accordance with Section R803, that is not less than $^{15}/_{32}$ inch (11.9 mm) thick bonded with exterior glue, identified as Exposure 1 and with edges supported by blocking or tongue-and-groove joints or an equivalent material. The smoke-developed index for roof applications shall not be limited.

R316.5.3 Attics. The thermal barrier specified in Section R316.4 is not required where all of the following apply:

1. Attic access is required by Section R807.1.
2. The space is entered only for purposes of repairs or maintenance.
3. The foam plastic insulation has been tested in accordance with Section R316.6 or the foam plastic insulation is protected against ignition using one of the following ignition barrier materials:
   - 3.1. $1^1/_2$-inch-thick (38 mm) mineral fiber insulation.
   - 3.2. $^1/_4$-inch-thick (6.4 mm) wood structural panels.
   - 3.3. $^3/_8$-inch (9.5 mm) particleboard.
   - 3.4. $^1/_4$-inch (6.4 mm) hardboard.
   - 3.5. $^3/_8$-inch (9.5 mm) gypsum board.
   - 3.6. Corrosion-resistant steel having a base metal thickness of 0.016 inch (0.406 mm).
   - 3.7. $1^1/_2$-inch-thick (38 mm) cellulose insulation.
   - 3.8. $^1/_4$-inch (6.4 mm) fiber-cement panel, soffit or backer board.

The ignition barrier is not required where the foam plastic insulation has been tested in accordance with Section R316.6.

R316.5.4 Crawl spaces. The thermal barrier specified in Section R316.4 is not required where all of the following apply:

1. Crawl space access is required by Section R408.4.
2. Entry is made only for purposes of repairs or maintenance.
3. The foam plastic insulation has been tested in accordance with Section R316.6 or the foam plastic insulation is protected against ignition using one of the following ignition barrier materials:
   - 3.1. $1^1/_2$-inch-thick (38 mm) mineral fiber insulation.
   - 3.2. $^1/_4$-inch-thick (6.4 mm) wood structural panels.
   - 3.3. $^3/_8$-inch (9.5 mm) particleboard.
   - 3.4. $^1/_4$-inch (6.4 mm) hardboard.
   - 3.5. $^3/_8$-inch (9.5 mm) gypsum board.
   - 3.6. Corrosion-resistant steel having a base metal thickness of 0.016 inch (0.406 mm).
   - 3.7. $^1/_4$-inch (6.4 mm) fiber-cement panel, soffit or backer board.

R316.5.5 Foam-filled exterior doors. Foam-filled exterior doors are exempt from the requirements of Sections R316.3 and R316.4.

R316.5.6 Foam-filled garage doors. Foam-filled garage doors in attached or detached garages are exempt from the requirements of Sections R316.3 and R316.4.

R316.5.7 Foam backer board. The thermal barrier specified in Section R316.4 is not required where siding backer board foam plastic insulation has a thickness of not more than 0.5 inch (12.7 mm) and a potential heat of not more than 2000 Btu per square foot (22 720 kJ/m^2) when tested in accordance with NFPA 259 and it complies with one or more of the following:

1. The foam plastic insulation is separated from the interior of the building by not less than 2 inches (51 mm) of mineral fiber insulation.
2. The foam plastic insulation is installed over existing exterior wall finish in conjunction with re-siding.
3. The foam plastic insulation has been tested in accordance with Section R316.6.

R316.5.8 Re-siding. The thermal barrier specified in Section R316.4 is not required where the foam plastic insulation is installed over existing exterior wall finish in conjunction with re-siding provided that the foam plastic has a thickness of not more than 0.5 inch (12.7 mm) and a potential heat of not more than 2000 Btu per square foot (22 720 kJ/m^2) when tested in accordance with NFPA 259.

R316.5.9 Interior trim. The thermal barrier specified in Section R316.4 is not required for exposed foam plastic interior trim, provided that all of the following are met:

1. The density is not less than 20 pounds per cubic foot (320 kg/m^3).
2. The thickness of the trim is not more than 0.5 inch (12.7 mm) and the width is not more than 8 inches (204 mm).
3. The interior trim shall not constitute more than 10 percent of the aggregate wall and ceiling area of any room or space.
4. The flame spread index does not exceed 75 when tested in accordance with ASTM E84 or UL 723. The smoke-developed index is not limited.

R316.5.10 Interior finish. Foam plastics used as interior finishes shall comply with Section R316.6 and shall meet the flame spread index and smoke-developed index requirements of Sections R302.9.1 and R302.9.2.

R316.5.11 Sill plates and headers. Foam plastic be spray applied to sill plates and headers or installed in the perimeter joist space without the thermal barrier specified in Section R316.4 shall comply with all of the following:

1. The thickness of the foam plastic shall be not more than $3^1/_4$ inches (83 mm).
2. The density of the foam plastic shall be in the range of 0.5 to 2.0 pounds per cubic foot (8 to 32 kg/m^3).
3. The foam plastic shall have a flame spread index of 25 or less and an accompanying smoke-developed index of 450 or less when tested in accordance with ASTM E84 or UL 723.

R316.5.12 Sheathing. Foam plastic insulation used as sheathing shall comply with Section R316.3 and Section R316.4. Where the foam plastic sheathing is exposed to the attic space at a gable or kneewall, the provisions of Section R316.5.3 shall apply. Where foam plastic insulation is used as exterior wall sheathing on framed wall assemblies, it shall comply with Section R316.8.

R316.5.13 Floors. The thermal barrier specified in Section R316.4 is not required to be installed on the walking surface of a structural floor system that contains foam plastic insulation where the foam plastic is covered by not more than a nominal $^1/_2$-inch-thick (12.7 mm) wood structural panel or equivalent. The thermal barrier specified in Section R316.4 is required on the underside of the structural floor system that contains foam plastic insulation where the underside of the structural floor system is exposed to the interior of the building.

R316.6 Specific approval. Foam plastic not meeting the requirements of Sections R316.3 through R316.5 shall be specifically approved on the basis of one of the following

approved tests: NFPA 286 with the acceptance criteria of Section R302.9.4, FM 4880, UL 1040 or UL 1715, or fire tests related to actual end-use configurations. Approval shall be based on the actual end-use configuration and shall be performed on the finished foam plastic assembly in the maximum thickness intended for use. Assemblies tested shall include seams, joints and other typical details used in the installation of the assembly and shall be tested in the manner intended for use.

R316.7 Termite damage. The use of foam plastics in areas of "very heavy" termite infestation probability shall be in accordance with Section R318.4.

R316.8 Wind resistance. Foam plastic insulation complying with ASTM C578 and ASTM C1289 and used as exterior wall sheathing on framed wall assemblies shall comply with SBCA FS 100 for wind pressure resistance unless installed directly over a sheathing material that is separately capable of resisting the wind load or otherwise exempted from the scope of SBCA FS 100.

SECTION R317
PROTECTION OF WOOD AND WOOD-BASED PRODUCTS AGAINST DECAY

R317.1 Location required. Protection of wood and wood-based products from decay shall be provided in the following locations by the use of naturally durable wood or wood that is preservative-treated in accordance with AWPA U1.

1. Wood joists or the bottom of a wood structural floor where closer than 18 inches (457 mm) or wood girders where closer than 12 inches (305 mm) to the exposed ground in crawl spaces or unexcavated area located within the periphery of the building foundation.
2. Wood framing members that rest on concrete or masonry exterior foundation walls and are less than 8 inches (203 mm) from the exposed ground.
3. Sills and sleepers on a concrete or masonry slab that is in direct contact with the ground unless separated from such slab by an impervious moisture barrier.
4. The ends of wood girders entering exterior masonry or concrete walls having clearances of less than $^1/_2$ inch (12.7 mm) on tops, sides and ends.
5. Wood siding, sheathing and wall framing on the exterior of a building having a clearance of less than 6 inches (152 mm) from the ground or less than 2 inches (51 mm) measured vertically from concrete steps, porch slabs, patio slabs and similar horizontal surfaces exposed to the weather.
6. Wood structural members supporting moisture-permeable floors or roofs that are exposed to the weather, such as concrete or masonry slabs, unless separated from such floors or roofs by an impervious moisture barrier. *The impervious moisture barrier system protecting the structure supporting floors shall provide positive drainage of water that infiltrates the moisture-permeable floor topping.*
7. Wood furring strips or other wood framing members attached directly to the interior of exterior masonry walls or concrete walls below grade except where an approved vapor retarder is applied between the wall and the furring strips or framing members.

R317.1.1 Field treatment. Field-cut ends, notches and drilled holes of preservative-treated wood shall be treated in the field in accordance with AWPA M4.

R317.1.2 Ground contact. All wood in contact with the ground, embedded in concrete in direct contact with the ground or embedded in concrete exposed to the weather that supports permanent structures intended for human occupancy shall be approved pressure-preservative-treated wood suitable for ground contact use, except that untreated wood used entirely below groundwater level or continuously submerged in fresh water shall not be required to be pressure-preservative treated.

R317.1.3 Geographical areas. In geographical areas where experience has demonstrated a specific need, approved naturally durable or pressure-preservative-treated wood shall be used for those portions of wood members that form the structural supports of buildings, balconies, porches or similar permanent building appurtenances where those members are exposed to the weather without adequate protection from a roof, eave, overhang or other covering that would prevent moisture or water accumulation on the surface or at joints between members. Depending on local experience, such members typically include:

1. Horizontal members such as girders, joists and decking.
2. Vertical members such as posts, poles and columns.
3. Both horizontal and vertical members.

R317.1.4 Wood columns. Wood columns shall be approved wood of natural decay resistance or approved pressure-preservative-treated wood.

Exceptions:

1. Columns exposed to the weather or in basements where supported by concrete piers or metal pedestals projecting 1 inch (25 mm) above a concrete floor or 6 inches (152 mm) above exposed earth and the earth is covered by an approved impervious moisture barrier.
2. Columns in enclosed crawl spaces or unexcavated areas located within the periphery of the building where supported by a concrete pier or metal pedestal at a height more than 8 inches (203 mm) from exposed earth and the earth is covered by an impervious moisture barrier.
3. Deck posts supported by concrete piers or metal pedestals projecting not less than 1 inch (25 mm) above a concrete floor or 6 inches (152 mm) above exposed earth.

R317.1.5 Exposed glued-laminated timbers. The portions of glued-laminated timbers that form the structural supports of a building or other structure and are exposed to weather and not properly protected by a roof, eave or sim-

ilar covering shall be pressure treated with preservative, or be manufactured from naturally durable or preservative-treated wood.

R317.1.6 Ventilation required beneath balcony or elevated walking surfaces. *Enclosed framing in exterior balconies and elevated walking surfaces that are exposed to rain, snow or drainage from irrigation shall be provided with openings that provide a net-free cross-ventilation area not less than $^1/_{150}$ of the area of each separate space.*

R317.2 Quality mark. Lumber and plywood required to be pressure-preservative treated in accordance with Section R318.1 shall bear the quality mark of an approved inspection agency that maintains continuing supervision, testing and inspection over the quality of the product and that has been approved by an accreditation body that complies with the requirements of the American Lumber Standard Committee treated wood program.

R317.2.1 Required information. The required quality mark on each piece of pressure-preservative-treated lumber or plywood shall contain the following information:

1. Identification of the treating plant.
2. Type of preservative.
3. The minimum preservative retention.
4. End use for which the product was treated.
5. Standard to which the product was treated.
6. Identity of the approved inspection agency.
7. The designation "Dry," if applicable.

Exception: Quality marks on lumber less than 1 inch (25 mm) nominal thickness, or lumber less than nominal 1 inch by 5 inches (25 mm by 127 mm) or 2 inches by 4 inches (51 mm by 102 mm) or lumber 36 inches (914 mm) or less in length shall be applied by stamping the faces of exterior pieces or by end labeling not less than 25 percent of the pieces of a bundled unit.

R317.3 Fasteners and connectors in contact with preservative-treated and fire-retardant-treated wood. Fasteners, including nuts and washers, and connectors in contact with preservative-treated wood and fire-retardant-treated wood shall be in accordance with this section. The coating weights for zinc-coated fasteners shall be in accordance with ASTM A153. Stainless steel driven fasteners shall be in accordance with the material requirements of ASTM F1667.

R317.3.1 Fasteners for preservative-treated wood. Fasteners, including nuts and washers, for preservative-treated wood shall be of hot-dipped, zinc-coated galvanized steel, stainless steel, silicon bronze or copper. Staples shall be of stainless steel. Coating types and weights for connectors in contact with preservative-treated wood shall be in accordance with the connector manufacturer's recommendations. In the absence of manufacturer's recommendations, not less than ASTM A653 type G185 zinc-coated galvanized steel, or equivalent, shall be used.

Exceptions:

1. $^1/_2$-inch-diameter (12.7 mm) or greater steel bolts.
2. Fasteners other than nails, staples and timber rivets shall be permitted to be of mechanically deposited zinc-coated steel with coating weights in accordance with ASTM B695, Class 55 minimum.
3. Plain carbon steel fasteners in SBX/DOT and zinc borate preservative-treated wood in an interior, dry environment shall be permitted.

R317.3.2 Fastenings for wood foundations. Fastenings, including nuts and washers, for wood foundations shall be as required in AWC PWF.

R317.3.3 Fasteners for fire-retardant-treated wood used in exterior applications or wet or damp locations. Fasteners, including nuts and washers, for fire-retardant-treated wood used in exterior applications or wet or damp locations shall be of hot-dipped, zinc-coated galvanized steel, stainless steel, silicon bronze or copper. Fasteners other than nails, staples and timber rivets shall be permitted to be of mechanically deposited zinc-coated steel with coating weights in accordance with ASTM B695, Class 55 minimum.

R317.3.4 Fasteners for fire-retardant-treated wood used in interior applications. Fasteners, including nuts and washers, for fire-retardant-treated wood used in interior locations shall be in accordance with the manufacturer's recommendations. In the absence of the manufacturer's recommendations, Section R317.3.3 shall apply.

R317.4 Plastic composites. Plastic composite exterior deck boards, stair treads, guards and handrails containing wood, cellulosic or other biodegradable materials shall comply with the requirements of Section R507.2.2.

SECTION R318
PROTECTION AGAINST SUBTERRANEAN TERMITES

R318.1 Subterranean termite control methods. In areas subject to damage from termites as indicated by Table R301.2(1), protection shall be by one, or a combination, of the following methods:

1. Chemical termiticide treatment in accordance with Section R318.2.
2. Termite-baiting system installed and maintained in accordance with the label.
3. Pressure-preservative-treated wood in accordance with the provisions of Section R317.1.
4. Naturally durable termite-resistant wood.
5. Physical barriers in accordance with Section R318.3 and used in locations as specified in Section R317.1.
6. Cold-formed steel framing in accordance with Sections R505.2.1 and R603.2.1.

R318.1.1 Quality mark. Lumber and plywood required to be pressure-preservative treated in accordance with Section R318.1 shall bear the quality mark of an approved inspection agency that maintains continuing supervision,

testing and inspection over the quality of the product and that has been approved by an accreditation body that complies with the requirements of the American Lumber Standard Committee treated wood program.

R318.1.2 Field treatment. Field-cut ends, notches and drilled holes of pressure-preservative-treated wood shall be retreated in the field in accordance with AWPA M4.

R318.2 Chemical termiticide treatment. Chemical termiticide treatment shall include soil treatment or field-applied wood treatment. The concentration, rate of application and method of treatment of the chemical termiticide shall be in strict accordance with the termiticide label.

R318.3 Barriers. Approved physical barriers, such as metal or plastic sheeting or collars specifically designed for termite prevention, shall be installed in a manner to prevent termites from entering the structure. Shields placed on top of an exterior foundation wall shall be used only if in combination with another method of protection.

R318.4 Foam plastic protection. In areas where the probability of termite infestation is "very heavy" as indicated in Figure R301.2(7), extruded and expanded polystyrene, polyisocyanurate and other foam plastics shall not be installed on the exterior face or under interior or exterior foundation walls or slab foundations located below grade. The clearance between foam plastics installed above grade and exposed earth shall be not less than 6 inches (152 mm).

Exceptions:

1. Buildings where the structural members of walls, floors, ceilings and roofs are entirely of noncombustible materials or pressure-preservative-treated wood.
2. Where in addition to the requirements of Section R318.1, an approved method of protecting the foam plastic and structure from subterranean termite damage is used.
3. On the interior side of basement walls.

SECTION R319
SITE ADDRESS

R319.1 Address identification. Buildings shall be provided with approved address identification. The address identification shall be legible and placed in a position that is visible from the street or road fronting the property. Address identification characters shall contrast with their background. Address numbers shall be Arabic numbers or alphabetical letters. Numbers shall not be spelled out. Each character shall be not less than 4 inches (102 mm) in height with a stroke width of not less than 0.5 inch (12.7 mm). Where required by the fire code official, address identification shall be provided in additional approved locations to facilitate emergency response. Where access is by means of a private road and the building address cannot be viewed from the public way, a monument, pole or other sign or means shall be used to identify the structure. Address identification shall be maintained.

SECTION R320
ACCESSIBILITY

R320.1 Scope. *Dwelling units in a building consisting of three or more dwelling units or four or more condominium units shall meet the requirements of the California Building Code Chapter 11A. Covered Multifamily Dwellings include but are not limited to dwelling units listed in Section 1.8.2.1.2. Dwelling units within a single structure separated by firewalls do not constitute separate buildings.* <

SECTION R321
ELEVATORS AND PLATFORM LIFTS

R321.1 Elevators. Where provided, passenger elevators, limited-use and limited-application elevators or private residence elevators shall comply with ASME A17.1/CSA B44.

R321.2 Platform lifts. Where provided, platform lifts shall comply with ASME A18.1.

R321.3 Accessibility. Elevators or platform *(wheelchair)* lifts that are part of an accessible route required by Chapter 11*A* of the *California Building Code*, shall comply with *the requirements in Chapter 11A of the California Building Code.*

SECTION R322
FLOOD-RESISTANT CONSTRUCTION

R322.1 General. Buildings and structures constructed in whole or in part in flood hazard areas, including A or V Zones and Coastal A Zones, as established in Table R301.2(1), and substantial improvement and repair of substantial damage of buildings and structures in flood hazard areas, shall be designed and constructed in accordance with the provisions contained in this section. Buildings and structures that are located in more than one flood hazard area shall comply with the provisions associated with the most restrictive flood hazard area. Buildings and structures located in whole or in part in identified floodways shall be designed and constructed in accordance with ASCE 24.

R322.1.1 Alternative provisions. As an alternative to the requirements in Section R322, ASCE 24 is permitted subject to the limitations of this code and the limitations therein.

R322.1.2 Structural systems. Structural systems of buildings and structures shall be designed, connected and anchored to resist flotation, collapse or permanent lateral movement due to structural loads and stresses from flooding equal to the design flood elevation.

R322.1.3 Flood-resistant construction. Buildings and structures erected in areas prone to flooding shall be constructed by methods and practices that minimize flood damage.

R322.1.4 Establishing the design flood elevation. The design flood elevation shall be used to define flood hazard areas. At a minimum, the design flood elevation shall be the higher of the following:

1. The base flood elevation at the depth of peak elevation of flooding, including wave height, that has a 1-

percent (100-year flood) or greater chance of being equaled or exceeded in any given year.

2. The elevation of the design flood associated with the area designated on a flood hazard map adopted by the community, or otherwise legally designated.

R322.1.4.1 Determination of design flood elevations. If design flood elevations are not specified, the building official is authorized to require the applicant to comply with either of the following:

1. Obtain and reasonably use data available from a federal, state or other source.
2. Determine the design flood elevation in accordance with accepted hydrologic and hydraulic engineering practices used to define special flood hazard areas. Determinations shall be undertaken by a registered design professional who shall document that the technical methods used reflect currently accepted engineering practice. Studies, analyses and computations shall be submitted in sufficient detail to allow thorough review and approval.

R322.1.4.2 Determination of impacts. In riverine flood hazard areas where design flood elevations are specified but floodways have not been designated, the applicant shall demonstrate that the effect of the proposed buildings and structures on design flood elevations, including fill, when combined with other existing and anticipated flood hazard area encroachments, will not increase the design flood elevation more than 1 foot (305 mm) at any point within the jurisdiction.

R322.1.5 Lowest floor. The lowest floor shall be the lowest floor of the lowest enclosed area, including basement, and excluding any unfinished flood-resistant enclosure that is useable solely for vehicle parking, building access or limited storage provided that such enclosure is not built so as to render the building or structure in violation of this section.

R322.1.6 Protection of mechanical, plumbing and electrical systems. Electrical systems, equipment and components; heating, ventilating, air-conditioning; plumbing appliances and plumbing fixtures; duct systems; and other service equipment shall be located at or above the elevation required in Section R322.2 or R322.3. If replaced as part of a substantial improvement, electrical systems, equipment and components; heating, ventilating, air-conditioning and plumbing appliances and plumbing fixtures; duct systems; and other service equipment shall meet the requirements of this section. Systems, fixtures, and equipment and components shall not be mounted on or penetrate through walls intended to break away under flood loads.

Exception: Locating electrical systems, equipment and components; heating, ventilating, air-conditioning; plumbing appliances and plumbing fixtures; duct systems; and other service equipment is permitted below the elevation required in Section R322.2 or R322.3 provided that they are designed and installed to prevent water from entering or accumulating within the components and to resist hydrostatic and hydrodynamic loads and stresses, including the effects of buoyancy, during the occurrence of flooding to the design flood elevation in accordance with ASCE 24. Electrical wiring systems are permitted to be located below the required elevation provided that they conform to the provisions of the *California Electrical Code* for wet conditions.

R322.1.7 Protection of water supply and sanitary sewage systems. *Water supply systems shall be designed to minimize or eliminate infiltration of floodwaters into the water supply and distribution systems. Sanitary sewage systems shall be designed to minimize or eliminate infiltration of floodwaters into sanitary drainage systems and discharges from sanitary drainage systems into floodwaters.*

R322.1.8 Flood-resistant materials. Building materials and installation methods used for flooring and interior and exterior walls and wall coverings below the elevation required in Section R322.2 or R322.3 shall be flood damage-resistant materials that conform to the provisions of FEMA TB-2.

R322.1.9 Manufactured homes. *(Not adopted in CA)*

R322.1.10 As-built elevation documentation. A registered design professional shall prepare and seal documentation of the elevations specified in Section R322.2 or R322.3.

R322.2 Flood hazard areas (including A Zones). Areas that have been determined to be prone to flooding and that are not subject to high-velocity wave action shall be designated as flood hazard areas. Flood hazard areas that have been delineated as subject to wave heights between $1^1/_2$ feet (457 mm) and 3 feet (914 mm) or otherwise designated by the jurisdiction shall be designated as Coastal A Zones and are subject to the requirements of Section R322.3. Buildings and structures constructed in whole or in part in flood hazard areas shall be designed and constructed in accordance with Sections R322.2.1 through R322.2.3.

R322.2.1 Elevation requirements.

1. Buildings and structures in flood hazard areas, including flood hazard areas designated as Coastal A Zones, shall have the lowest floors elevated to or above the base flood elevation plus 1 foot (305 mm), or the design flood elevation, whichever is higher.
2. In areas of shallow flooding (AO Zones), buildings and structures shall have the lowest floor (including basement) elevated to a height above the highest adjacent grade of not less than the depth number specified in feet (mm) on the FIRM plus 1 foot (305 mm), or not less than 3 feet (915 mm) if a depth number is not specified.
3. Basement floors that are below grade on all sides shall be elevated to or above base flood elevation plus 1 foot (305 mm), or the design flood elevation, whichever is higher.

Exception: Enclosed areas below the design flood elevation, including basements with floors that are not below grade on all sides, shall meet the requirements of Section R322.2.2.

R322.2.2 Enclosed area below design flood elevation. Enclosed areas, including crawl spaces, that are below the design flood elevation shall:

1. Be used solely for parking of vehicles, building access or storage.
2. Be provided with flood openings that meet the following criteria and are installed in accordance with Section R322.2.2.1:
   - 2.1. The total net area of nonengineered openings shall be not less than 1 square inch (645 mm^2) for each square foot (0.093 m^2) of enclosed area where the enclosed area is measured on the exterior of the enclosure walls, or the openings shall be designed as engineered openings and the construction documents shall include a statement by a registered design professional that the design of the openings will provide for equalization of hydrostatic flood forces on exterior walls by allowing for the automatic entry and exit of floodwaters as specified in Section 2.7.2.2 of ASCE 24.
   - 2.2. Openings shall be not less than 3 inches (76 mm) in any direction in the plane of the wall.
   - 2.3. The presence of louvers, blades, screens and faceplates or other covers and devices shall allow the automatic flow of floodwater into and out of the enclosed areas and shall be accounted for in the determination of the net open area.

R322.2.2.1 Installation of openings. The walls of enclosed areas shall have openings installed such that:

1. There shall be not less than two openings on different sides of each enclosed area; if a building has more than one enclosed area below the design flood elevation, each area shall have openings.
2. The bottom of each opening shall be not more than 1 foot (305 mm) above the higher of the final interior grade or floor and the finished exterior grade immediately under each opening.
3. Openings shall be permitted to be installed in doors and windows; doors and windows without installed openings do not meet the requirements of this section.

R322.2.3 Foundation design and construction. Foundation walls for buildings and structures erected in flood hazard areas shall meet the requirements of Chapter 4.

Exception: Unless designed in accordance with Section R404:

1. The unsupported height of 6-inch (152 mm) plain masonry walls shall be not more than 3 feet (914 mm).
2. The unsupported height of 8-inch (203 mm) plain masonry walls shall be not more than 4 feet (1219 mm).
3. The unsupported height of 8-inch (203 mm) reinforced masonry walls shall be not more than 8 feet (2438 mm).

For the purpose of this exception, unsupported height is the distance from the finished grade of the under-floor space to the top of the wall.

R322.2.4 Tanks. Underground tanks shall be anchored to prevent flotation, collapse and lateral movement under conditions of the base flood. Above-ground tanks shall be installed at or above the elevation required in Section R322.2.1 or shall be anchored to prevent flotation, collapse and lateral movement under conditions of the base flood.

R322.3 Coastal high-hazard areas (including V Zones and Coastal A Zones, where designated). Areas that have been determined to be subject to wave heights in excess of 3 feet (914 mm) or subject to high-velocity wave action or wave-induced erosion shall be designated as coastal high-hazard areas. Flood hazard areas that have been designated as subject to wave heights between $1^1/_2$ feet (457 mm) and 3 feet (914 mm) or otherwise designated by the jurisdiction shall be designated as Coastal A Zones. Buildings and structures constructed in whole or in part in coastal high-hazard areas and Coastal A Zones, where designated, shall be designed and constructed in accordance with Sections R322.3.1 through R322.3.10.

R322.3.1 Location and site preparation.

1. New buildings and buildings that are determined to be substantially improved pursuant to Section R105.3.1.1 shall be located landward of the reach of mean high tide.
2. For any alteration of sand dunes and mangrove stands, the building official shall require submission of an engineering analysis that demonstrates that the proposed alteration will not increase the potential for flood damage.

R322.3.2 Elevation requirements.

1. Buildings and structures erected within coastal high-hazard areas and Coastal A Zones, shall be elevated so that the bottom of the lowest horizontal structural members supporting the lowest floor, with the exception of piling, pile caps, columns, grade beams and bracing, is elevated to or above the base flood elevation plus 1 foot (305 mm) or the design flood elevation, whichever is higher.
2. Basement floors that are below grade on all sides are prohibited.
3. The use of fill for structural support is prohibited.
4. Minor grading, and the placement of minor quantities of fill, shall be permitted for landscaping and for drainage purposes under and around buildings and for support of parking slabs, pool decks, patios and walkways.
5. Walls and partitions enclosing areas below the design flood elevation shall meet the requirements of Sections R322.3.5 and R322.3.6.

R322.3.3 Foundations. Buildings and structures erected in coastal high-hazard areas and Coastal A Zones shall be supported on pilings or columns and shall be adequately anchored to such pilings or columns. The space below the elevated building shall be either free of obstruction or, if enclosed with walls, the walls shall meet the requirements of Section R322.3.5. Pilings shall have adequate soil penetrations to resist the combined wave and wind loads (lateral and uplift). Water-loading values used shall be those associated with the design flood. Wind-loading values shall be those required by this code. Pile embedment shall include consideration of decreased resistance capacity caused by scour of soil strata surrounding the piling. Pile systems design and installation shall be certified in accordance with Section R322.3.9. Spread footing, mat, raft or other foundations that support columns shall not be permitted where soil investigations that are required in accordance with Section R401.4 indicate that soil material under the spread footing, mat, raft or other foundation is subject to scour or erosion from wave-velocity flow conditions. If permitted, spread footing, mat, raft or other foundations that support columns shall be designed in accordance with ASCE 24.

Exception: In Coastal A Zones, stem wall foundations supporting a floor system above and backfilled with soil or gravel to the underside of the floor system shall be permitted provided that the foundations are designed to account for wave action, debris impact, erosion and local scour. Where soils are susceptible to erosion and local scour, stem wall foundations shall have deep footings to account for the loss of soil.

R322.3.4 Concrete slabs. Concrete slabs used for parking, floors of enclosures, landings, decks, walkways, patios and similar uses that are located beneath structures, or slabs that are located such that if undermined or displaced during base flood conditions could cause structural damage to the building foundation, shall be designed and constructed in accordance with one of the following:

1. To be structurally independent of the foundation system of the structure, to not transfer flood loads to the main structure, and to be frangible and break away under flood conditions prior to base flood conditions. Slabs shall be a maximum of 4 inches (102 mm) thick, shall not have turned-down edges, shall not contain reinforcing, shall have isolation joints at pilings and columns, and shall have control or construction joints in both directions spaced not more than 4 feet (1219 mm) apart.
2. To be self-supporting, structural slabs capable of remaining intact and functional under base flood conditions, including erosion and local scour, and the main structure shall be capable of resisting any added flood loads and effects of local scour caused by the presence of the slabs.

R322.3.5 Walls below design flood elevation. Walls and partitions are permitted below the elevated floor, provided that such walls and partitions are not part of the structural support of the building or structure and:

1. Electrical, mechanical and plumbing system components are not to be mounted on or penetrate through walls that are designed to break away under flood loads; and
2. Are constructed with insect screening or open lattice; or
3. Are designed to break away or collapse without causing collapse, displacement or other structural damage to the elevated portion of the building or supporting foundation system. Such walls, framing and connections shall have a resistance of not less than 10 (479 Pa) and not more than 20 pounds per square foot (958 Pa) as determined using allowable stress design; or
4. Where wind loading values of this code exceed 20 pounds per square foot (958 Pa), as determined using allowable stress design, the construction documents shall include documentation prepared and sealed by a registered design professional that:
   4.1. The walls and partitions below the design flood elevation have been designed to collapse from a water load less than that which would occur during the base flood.
   4.2. The elevated portion of the building and supporting foundation system have been designed to withstand the effects of wind and flood loads acting simultaneously on structural and nonstructural building components. Water-loading values used shall be those associated with the design flood. Wind-loading values shall be those required by this code.
5. Walls intended to break away under flood loads as specified in Item 3 or 4 have flood openings that meet the criteria in Section R322.2.2, Item 2.

R322.3.6 Enclosed areas below design flood elevation. Enclosed areas below the design flood elevation shall be used solely for parking of vehicles, building access or storage.

R322.3.6.1 Protection of building envelope. An exterior door that meets the requirements of Section R609 shall be installed at the top of stairs that provide access to the building and that are enclosed with walls designed to break away in accordance with Section R322.3.5.

R322.3.7 Stairways and ramps. Stairways and ramps that are located below the lowest floor elevations specified in Section R322.3.2 shall comply with one or more of the following:

1. Be designed and constructed with open or partially open risers and guards.
2. Stairways and ramps not part of the required means of egress shall be designed and constructed to break

away during design flood conditions without causing damage to the building or structure, including foundation.

3. Be retractable, or able to be raised to or above the lowest floor elevation, provided that the ability to be retracted or raised prior to the onset of flooding is not contrary to the means of egress requirements of the code.
4. Be designed and constructed to resist flood loads and minimize transfer of flood loads to the building or structure, including foundation.

Areas below stairways and ramps shall not be enclosed with walls below the design flood elevation unless such walls are constructed in accordance with Section R322.3.5.

R322.3.8 Decks and porches. Attached decks and porches shall meet the elevation requirements of Section R322.3.2 and shall either meet the foundation requirements of this section or shall be cantilevered from or knee braced to the building or structure. Self-supporting decks and porches that are below the elevation required in Section R322.3.2 shall not be enclosed by solid, rigid walls, including walls designed to break away. Self-supporting decks and porches shall be designed and constructed to remain in place during base flood conditions or shall be frangible and break away under base flood conditions.

R322.3.9 Construction documents. The construction documents shall include documentation that is prepared and sealed by a registered design professional that the design and methods of construction to be used meet the applicable criteria of this section.

R322.3.10 Tanks. Underground tanks shall be anchored to prevent flotation, collapse and lateral movement under conditions of the base flood. Above-ground tanks shall be installed at or above the elevation required in Section R322.3.2. Where elevated on platforms, the platforms shall be cantilevered from or knee braced to the building or shall be supported on foundations that conform to the requirements of Section R322.3.

SECTION R323
STORM SHELTERS

R323.1 General. This section applies to storm shelters where constructed as separate detached buildings or where constructed as safe rooms within buildings for the purpose of providing refuge from storms that produce high winds, such as tornados and hurricanes. In addition to other applicable requirements in this code, storm shelters shall be constructed in accordance with ICC/NSSA-500.

SECTION 324
SOLAR ENERGY SYSTEMS

R324.1 General. Solar energy systems shall comply with the provisions of this section.

R324.2 Solar thermal systems. Solar thermal systems shall be designed and installed in accordance with *the California Plumbing Code* and the *California Fire Code*.

R324.3 Photovoltaic systems. Photovoltaic systems shall be designed and installed in accordance with Sections R324.3.1 through R324.7.1 and the *California Electrical Code*.

R324.3.1 Equipment listings. Photovoltaic panels and modules shall be listed and labeled in accordance with UL 1703. Inverters shall be listed and labeled in accordance with UL 1741. Systems connected to the utility grid shall use inverters listed for utility interaction.

R324.4 Rooftop-mounted photovoltaic systems. Rooftop-mounted photovoltaic panel systems installed on or above the roof covering shall be designed and installed in accordance with this section.

R324.4.1 Structural requirements. Rooftop-mounted photovoltaic panel systems shall be designed to structurally support the system and withstand applicable gravity loads in accordance with Chapter 3. The roof on which these systems are installed shall be designed and constructed to support the loads imposed by such systems in accordance with Chapter 8.

R324.4.1.1 Roof load. Portions of roof structures not covered with photovoltaic panel systems shall be designed for dead loads and roof loads in accordance with Sections R301.4 and R301.6. Portions of roof structures covered with photovoltaic panel systems shall be designed for the following load cases:

1. Dead load (including photovoltaic panel weight) plus snow load in accordance with Table R301.2(1).
2. Dead load (excluding photovoltaic panel weight) plus roof live load or snow load, whichever is greater, in accordance with Section R301.6.

R324.4.1.2 Wind load. Rooftop-mounted photovoltaic panel or module systems and their supports shall be designed and installed to resist the component and cladding loads specified in Table R301.2(2), adjusted for height and exposure in accordance with Table R301.2(3).

R324.4.2 Fire classification. Rooftop-mounted photovoltaic panel systems shall have the same fire classification as the roof assembly required in Section R902.

R324.4.3 Roof penetrations. Roof penetrations shall be flashed and sealed in accordance with Chapter 9.

R324.5 Building-integrated photovoltaic systems. Building-integrated photovoltaic systems that serve as roof coverings shall be designed and installed in accordance with Section R905.

R324.5.1 Photovoltaic shingles. Photovoltaic shingles shall comply with Section R905.16.

R324.5.2 Fire classification. Building-integrated photovoltaic systems shall have a fire classification in accordance with Section R902.3.

R324.6 Roof access and pathways. Roof access, pathways and setback requirements shall be provided in accordance with Sections R324.6.1 through R324.6.2.1. Access and minimum spacing shall be required to provide emergency access to the roof, to provide pathways to specific areas of the roof, provide for smoke ventilation opportunity areas, and to provide emergency egress from the roof.

Exceptions:

1. Detached, nonhabitable structures, including but not limited to detached garages, parking shade structures, carports, solar trellises and similar structures, shall not be required to provide roof access.
2. Roof access, pathways and setbacks need not be provided where the *enforcing agency* has determined that rooftop operations will not be employed.
3. These requirements shall not apply to roofs with slopes of two units vertical in 12 units horizontal (17-percent slope) or less.

R324.6.1 Pathways. Not fewer than two pathways, on separate roof planes from lowest roof edge to ridge and not less than 36 inches (914 mm) wide, shall be provided on all buildings. Not fewer than one pathway shall be provided on the street or driveway side of the roof. For each roof plane with a photovoltaic array, a pathway not less than 36 inches wide (914 mm) shall be provided from the lowest roof edge to ridge on the same roof plane as the photovoltaic array, on an adjacent roof plane, or straddling the same and adjacent roof planes. Pathways shall be over areas capable of supporting fire fighters accessing the roof. Pathways shall be located in areas with minimal obstructions such as vent pipes, conduit, or mechanical equipment.

R324.6.2 Setback at ridge. For photovoltaic arrays occupying not more than 33 percent of the plan view total roof area, not less than an 18-inch (457 mm) clear setback is required on both sides of a horizontal ridge. For photovoltaic arrays occupying more than 33 percent of the plan view total roof area, not less than a 36-inch (914 mm) clear setback is required on both sides of a horizontal ridge.

R324.6.2.1 Alternative setback at ridge. Where an automatic sprinkler system is installed within the dwelling in accordance with NFPA 13D or Section P2904, setbacks at ridges shall comply with one of the following:

1. For photovoltaic arrays occupying not more than 66 percent of the plan view total roof area, not less than an 18-inch (457 mm) clear setback is required on both sides of a horizontal ridge.
2. For photovoltaic arrays occupying more than 66 percent of the plan view total roof area, not less than a 36-inch (914 mm) clear setback is required on both sides of a horizontal ridge.

R324.6.2.2 Emergency escape and rescue opening. Panels and modules installed on dwellings shall not be placed on the portion of a roof that is below an emergency escape and rescue opening. A pathway not less than 36 inches (914 mm) wide shall be provided to the emergency escape and rescue opening.

R324.7 Ground-mounted photovoltaic systems. Ground-mounted photovoltaic systems shall be designed and installed in accordance with Section R301.

R324.7.1 Fire separation distances. Ground-mounted photovoltaic systems shall be subject to the fire separation distance requirements determined by the *enforcing agency.*

R324.7.2 Ground-mounted photovoltaic arrays. *Ground mounted photovoltaic arrays shall comply with this section and the California Electrical Code. Setback requirements shall not apply to ground-mounted, free-standing photovoltaic arrays. A clear, brush-free area of 10 feet (3048 mm) shall be required for ground-mounted photovoltaic arrays.*

R324.7.3 Locations of DC conductors. *Conduit, wiring systems, and raceways for photovoltaic circuits shall be located as close as possible to the ridge or hip or valley and from the hip or valley as directly as possible to an outside wall to reduce trip hazards and maximize ventilation opportunities. Conduit runs between sub arrays and to DC combiner boxes shall be installed in a manner that minimizes the total amount of conduit on the roof by taking the shortest path from the array to the DC combiner box. The DC combiner boxes shall be located such that conduit runs are minimized in the pathways between arrays. DC wiring shall be installed in metallic conduit or raceways when located within enclosed spaces in a building. Conduit shall run along the bottom of load bearing members.*

SECTION R325
MEZZANINES

R325.1 General. Mezzanines shall comply with Sections R325 through R325.5. Habitable attics shall comply with Section R325.6.

R325.2 Mezzanines. The clear height above and below mezzanine floor construction shall be not less than 7 feet (2134 mm).

R325.3 Area limitation. The aggregate area of a mezzanine or mezzanines shall be not greater than one-third of the floor area of the room or space in which they are located. The enclosed portion of a room shall not be included in a determination of the floor area of the room in which the mezzanine is located.

Exception: The aggregate area of a mezzanine located within a dwelling unit equipped with a fire sprinkler system in accordance with Section P2904 shall not be greater than one-half of the floor area of the room, provided that the mezzanine meets all of the following requirements:

1. Except for enclosed closets and bathrooms, the mezzanine is open to the room in which such mezzanine is located.

2. The opening to the room is unobstructed except for walls not more than 42 inches (1067 mm) in height, columns and posts.
3. The exceptions to Section R325.5 are not applied.

R325.4 Means of egress. The means of egress for mezzanines shall comply with the applicable provisions of Section R311.

R325.5 Openness. Mezzanines shall be open and unobstructed to the room in which they are located except for walls not more than 36 inches (914 mm) in height, columns and posts.

Exceptions:

1. Mezzanines or portions thereof are not required to be open to the room in which they are located, provided that the aggregate floor area of the enclosed space is not greater than 10 percent of the mezzanine area.
2. In buildings that are not more than two stories above grade plane and equipped throughout with an automatic sprinkler system in accordance with Section R313, a mezzanine shall not be required to be open to the room in which the mezzanine is located.

R325.6 Habitable attic. A habitable attic shall not be considered a story where complying with all of the following requirements:

1. The occupiable floor area is not less than 70 square feet (17 m^2), in accordance with Section R304.
2. The occupiable floor area has a ceiling height in accordance with Section R305.
3. The occupiable space is enclosed by the roof assembly above, knee walls (if applicable) on the sides and the floor-ceiling assembly below.
4. The floor of the occupiable space shall not extend beyond the exterior walls of the floor below.

SECTION R326
RESERVED

SECTION R327
STATIONARY STORAGE BATTERY SYSTEMS

R327.1 General. Stationary storage battery system shall comply with the provisions of this section.

R327.2 Equipment listings. Stationary storage battery systems shall be listed and labeled for residential use in accordance with UL 9540.

Exceptions:

1. Where approved, repurposed unlisted battery systems from electric vehicles are allowed to be installed outdoors or in detached sheds located not less than 5 feet (1524 mm) from exterior walls, property lines and public ways.
2. Battery systems that are an integral part of an electric vehicle are allowed provided that the installation complies with Section 625.48 of *the California Electrical Code.*
3. Battery systems less than 1 kWh (3.6 megajoules).

R327.3 Installation. Stationary storage battery systems shall be installed in accordance with the manufacturer's instructions and their listing, if applicable, and shall not be installed within the habitable space of a dwelling unit.

R327.4 Electrical installation. Stationary storage battery systems shall be installed in accordance with *the California Electrical Code.* Inverters shall be listed and labeled in accordance with UL 1741 or provided as part of the UL 9540 listing. Systems connected to the utility grid shall use inverters listed for utility interaction.

R327.5 Ventilation. Indoor installations of stationary storage battery systems that include batteries that produce hydrogen or other flammable gases during charging shall be provided with ventilation in accordance with *the California Mechanical Code.*

R327.6 Protection from impact. Stationary storage battery systems installed in a location subject to vehicle damage shall be protected by approved barriers.

SECTION R334
CONSTRUCTION WASTE REDUCTION, DISPOSAL AND RECYCLING

R334.1 Construction waste management. *Recycle and/or salvage for reuse a minimum of 65 percent of the nonhazardous construction and demolition waste in accordance with the California Green Building Standards Code, Chapter 4, Division 4.4.*

SECTION R335
SPECIAL PROVISIONS FOR LICENSED 24-HOUR CARE FACILITIES IN A GROUP R-3.1

R335.1 Scope. *The provisions of this section shall apply to 24-hour care facilities in a Group R-3.1 occupancy licensed by a governmental agency.*

R335.2 General. *The provisions in this section shall apply in addition to general requirements in this code.*

R335.2.1 *Restraint shall not be practiced in a Group R-3.1 occupancy.*

Exception: *Occupancies which meet all the requirements for a Group I-3 occupancy.*

R335.2.2 *Pursuant to Health and Safety Code Section 13133, regulations of the state fire marshal pertaining to Occupancies classified as Residential Facilities (RF) and Residential-care Facilities for the Elderly (RCFE) shall apply uniformly throughout the state and no city, county, city and county, including a charter city or charter county, or fire protection district shall adopt or enforce any ordinance or local rule or regulation relating to fire and panic*

safety which is inconsistent with these regulations. A city, county, city and county, including a charter city or charter county may pursuant to Health and Safety Code Section 13143.5, or a fire protection district may pursuant to Health and Safety Code Section 13869.7, adopt standards more stringent than those adopted by the state fire marshal that are reasonably necessary to accommodate local climate, geological, or topographical conditions relating to roof coverings for Residential-care Facilities for the Elderly.

Exception: *Local regulations relating to roof coverings in facilities licensed as a Residential Care Facility for the Elderly (RCFE) per Health and Safety Code Section 13133.*

R335.3 Building height and area provisions.

R335.3.1 Limitations six or less clients. *Group R-3.1 occupancies where nonambulatory clients are housed above the first story, having more than two stories in height or having more than 3,000 square feet (279 m^2) of floor area above the first story shall not be of less than one-hour fire-resistance-rated construction throughout.*

In Group R-3.1 occupancies housing a bedridden client, the client sleeping room shall not be located above or below the first story.

Exception: *Clients who become bedridden as a result of a temporary illness as defined in Health and Safety Code Sections 1566.45, 1568.0832 and 1569.72. A temporary illness is an illness which persists for 14 days or less. A bedridden client may be retained in excess of the 14 days upon approval by the Department of Social Services and may continue to be housed on any story in a Group R-3.1 occupancy classified as a licensed residential facility.*

Every licensee admitting or retaining a bedridden resident shall, within 48 hours of the resident's admission or retention in the facility, notify the local fire authority with jurisdiction of the estimated length of time the resident will retain his or her bedridden status in the facility.

R335.3.2. *Buildings housing protective social-care homes or in occupancies housing inmates who are not restrained need not be of one-hour fire-resistive construction when not more than two stories in height. In no case shall individual floor areas exceed 3,000 square feet (279 m^2). The fire-resistive protection of the exterior walls shall not be less than one hour where such walls are located within 5 feet (1524 mm) of the property line. Openings within such walls are not permitted. Openings in exterior nonrated walls need not be protected.*

R335.4 Interior finish provisions.

R335.4.1 Interior wall and ceiling finish. *Group R-3.1 occupancies housing a bedridden client shall comply with Interior Wall and Ceiling Finish requirements specified for Group I-2 occupancies in Table 803.11 of the California Building Code.*

R335.5 Fire protection system provisions.

R335.5.1 Automatic sprinkler systems in Group R-3.1 occupancies. *An automatic sprinkler system shall be installed where required in Section R313.*

Exceptions:

1. *Existing Group R-3 occupancies converted to Group R-3.1 occupancies not housing bedridden clients, not housing nonambulatory clients above the first floor, and not housing clients above the second floor.*
2. *Existing Group R-3 occupancies converted to Group R-3.1 occupancies housing only one bedridden client and complying with Section R335.6.3.3.*
3. *Pursuant to Health and Safety Code Section 13113 existing occupancies housing ambulatory children only, none of whom are mentally ill children or children with intellectual disabilities, and the buildings or portions thereof in which such children are housed are not more than two stories in height, and buildings or portions thereof housing such children have an automatic fire alarm system activated by approved smoke detectors.*
4. *Pursuant to Health and Safety Code Section 13143.6 existing occupancies licensed for protective social care which house ambulatory clients only, none of whom is a child (under the age of 18 years), or who is elderly (65 years of age or over).*

R335.5.2 Smoke alarms in Groups R-3.1 occupancies. *Smoke alarms shall be installed where required in Section R314. In addition to the provisions set forth in Section R314 the following shall apply:*

1. *Smoke alarms shall be provided throughout the habitable areas of the dwelling unit except kitchens.*
2. *Facilities housing a bedridden client:*
   - *2.1. Smoke alarms shall receive their primary power from the building wiring when such wiring is served from a commercial source and shall be equipped with a battery backup.*
   - *2.2. Smoke alarms shall be electrically interconnected so as to cause all smoke alarms to sound a distinctive alarm signal upon actuation of any single smoke alarm. Such alarm signal shall be audible throughout the facility at a minimal level of 15 db above ambient noise level. These devices need not be interconnected to any other fire alarm device, have a control panel, or be electrically supervised or provided with emergency power.*

R335.5.2.1 Audible alarm signal. *The audible signal shall be the standard fire alarm evacuation signal, ANSI S3.41 Audible Emergency Evacuation Signal,*

"three pulse temporal pattern," as described in NFPA 72.

R335.5.2.2 Hearing impaired. *See Section 907.5.2.3 of the California Building Code.*

R335.5.2.3 Visible alarms. *Visible alarm notification appliances shall be provided in accordance with Sections 907.5.2.3.1 through 907.5.2.3.5 of the California Building Codes.*

Exceptions:

1. *Visible alarm notification appliances are not required in alterations, except where an existing fire alarm system is upgraded or replaced, or a new fire alarm system is installed.*
2. *Visible alarm notification appliances shall not be required in enclosed exit stairways, exterior exit stairs, and exterior exit ramps.*
3. *Visible alarm notification appliances shall not be required in elevator cars.*

R335.5.2.4 Group R-3.1. *Protective social care facilities which house persons who are hearing impaired, shall be provided with notification appliances for the hearing impaired installed in accordance with NFPA 72 and which shall activated upon initiation of the fire alarm system or the smoke alarms.*

Exception: *The use of the existing evacuation signaling scheme shall be permitted where approved by the enforcing agency.*

R335.6 Means of egress provisions.

R335.6.1 General. *In addition to the general means of egress requirements of Chapter 10 of the California Building Code, this section shall apply to Group R-3.1 occupancies.*

R335.6.2 Number of exits.

R335.6.2.1. *Group R-3.1 occupancies shall have a minimum of two exits.*

R335.6.3 Egress arrangements.

R335.6.3.1. *Egress through adjoining dwelling units shall not be permitted.*

R335.6.3.2 Group R-3.1 occupancies housing nonambulatory clients. *In a Group R-3.1 occupancy, bedrooms used by nonambulatory clients shall have access to at least one of the required exits which shall conform to one of the following:*

1. *Egress through a hallway or area into a bedroom in the immediate area which has an exit directly to the exterior and the corridor/hallway is constructed consistent with the dwelling unit interior walls. The hallway shall be separated from common areas by a solid wood door not less than $1^3/_8$ inch (35 mm) in thickness, maintained self-closing or shall be automatic closing by actuation of a smoke detector installed in accordance with Section 716.5.9 of the California Building Code.*
2. *Egress through a hallway which has an exit directly to the exterior. The hallway shall be separated from the rest of the house by a wall constructed consistent with the dwelling unit interior walls and opening protected by a solid wood door not less than $1^3/_8$ inch (35 mm) in thickness, maintained self-closing or shall be automatic closing by actuation of a smoke detector installed in accordance with Section 716.5.9 of the California Building Code.*
3. *Direct exit from the bedroom to the exterior, such doors shall be of a size as to permit the installation of a door not less than 3 feet (914 mm) in width and not less than 6 feet 8 inches (2032 mm) in height. When installed, doors shall be capable of opening at least 90 degrees and shall be so mounted that the clear width of the exit way is not less than 32 inches (813 mm).*
4. *Egress through an adjoining bedroom which exits to the exterior.*

R335.6.3.3 Group R-3.1 occupancies housing only one bedridden client. *In Group R-3.1 occupancies housing a bedridden client and not provided with an approved automatic fire sprinkler system, all of the following shall apply:*

1. *In Group R-3.1 Occupancies housing a bedridden client, a direct exit to the exterior of the residence shall be provided from the client sleeping room.*
2. *Doors to a bedridden client's sleeping room shall be of a self-closing, positive latching $1^3/_8$ inch solid wood door. Such doors shall be provided with a gasket so installed as to provide a seal where the door meets the jam on both sides and across the top. Doors shall be maintained self-closing or shall be automatic closing by actuation of a smoke detector in accordance with Section 716.5.9 of the California Building Code.*
3. *Group R-3.1 Occupancies housing a bedridden client, shall not have a night latch, dead bolt, security chain or any similar locking device installed on any interior door leading from a bedridden client's sleeping room to any interior area such as a corridor, hallway and or general use areas of the residence in accordance with Chapter 10 of the California Building Code.*
4. *The exterior exit door to a bedridden client's sleeping room shall be operable from both the interior and exterior of the residence.*
5. *Every required exit doorway from a bedridden client sleeping room shall be of a size as to permit the installation of a door not less than 3 feet (914 mm) in width and not less than 6 feet 8 inches (2032 mm) in height. When installed in exit doorways, exit doors shall be capable of opening at least 90 degrees and shall be so*

mounted that the clear width of the exit way is not less than 32 inches (813 mm).

Note: *A sliding glass door can be used as an exterior exit doorway as long as it is operable from the inside and outside and the clear width of the exit way is not less than 32 inches (813 mm).*

R335.6.3.4 Intervening rooms. *A means of exit shall not pass through more than one intervening room. A means of egress shall not pass through kitchens, storerooms, closets, garages or spaces used for similar purposes.*

Exception: *Kitchens which do not form separate rooms by construction.*

R335.6.4 Changes in level. *In Group R-3.1 occupancies housing nonambulatory clients interior changes in level up to 0.25 inch (6 mm) may be vertical and without edge treatment. Changes in level between 0.25 inch (6 mm) and 0.5 inch (12.7 mm) shall be beveled with a slope no greater than 1 unit vertical in 2 units horizontal (50% slope). Changes in level greater than 0.5 inch (12.7 mm) shall be accomplished by means of a ramp.*

R335.6.5 Stairways. *Group R-3.1 occupancies may continue to use existing stairways (except for winding and spiral stairways which are not permitted as a required means of egress) provided the stairs have a maximum rise of 8 inches (203 mm) with a minimum run of 9 inches (229 mm). The minimum stairway width may be 30 inches (762 mm).*

R335.6.6 Floor separation. *Group R-3.1 occupancies with non-ambulatory clients housed above the first floor shall be provided with a non-fire resistance constructed floor separation at stairs which will prevent smoke migration between floors. Such floor separation shall have equivalent construction of 0.5 inch (12.7 mm) gypsum wallboard on one side of wall framing.*

Exceptions:

1. *Occupancies with at least one exterior exit from floors occupied by clients.*
2. *Occupancies provided with automatic fire sprinkler systems complying with Chapter 9.*

R335.6.6.1 Doors within floor separations. *Doors within such floor separations shall be tight fitting solid wood at least $1^3/_8$ inches (35 mm) in thickness. Door glazing shall not exceed 1296 square inches (32 918 mm^2) with no dimension greater than 54 inches (1372 mm). Such doors shall be positive latching, smoke gasketed and shall be automatic-closing by smoke detection.*

R335.6.7 Fences and gates. *Grounds of a Residential Care for the Elderly facility serving Alzheimer clients may be fenced and gates therein equipped with locks, provided safe dispersal areas are located not less than 50 feet (15 240 mm) from the buildings. Dispersal areas shall be sized to provide an area of not less than 3 square feet (0.28 m^2) per occupant. Gates shall not be installed across corridors or passageways leading to such dispersal areas unless they comply with egress requirements.*

R335.6.8 Basement exits. *One exit is required to grade level when the basement is accessible to clients.*

R335.6.9 Delayed egress locks. *See Section 1010.1.9.7 of the California Building Code.*

R335.7 Request for alternate means of protection for facilities housing bedridden clients. *Request for alternate means of protection shall apply to Sections R335 through R335.7. Request for approval to use an alternative material, assembly or materials, equipment, method of construction, method of installation of equipment, or means of protection shall be made in writing to the local fire authority having jurisdiction by the facility, client or the client's authorized representative. Sufficient evidence shall be submitted to substantiate the need for an alternate means of protection.*

The facility, client or the client's representative or the local fire authority having jurisdiction may request a written opinion from the State Fire Marshal concerning the interpretation of the regulations promulgated by the State Fire Marshal for a particular factual dispute. The State Fire Marshal shall issue the written opinion within 45 days following the request.

Approval of a request for use of an alternative material, assembly or materials, equipment, method of construction, method of installation of equipment, or means of protection made pursuant to this section shall be limited to Group R-3.1 occupancies housing a bedridden client.

Approvals made by the local fire authority having jurisdiction and the written opinion by the State Fire Marshal shall be applicable only to the requesting facility and shall not be construed as establishing any precedent for any future request by that facility or any other facility.

R335.8 Temporarily bedridden clients. *Clients who become temporarily bedridden as defined in Health and Safety Code Section 1569.72, as enforced by the Department of Social Services, may continue to be housed on any story in Group R-3.1 occupancies classified as Residential Care Facilities for the Elderly (RCFE). Every Residential Care Facility for the Elderly (RCFE) admitting or retaining a bedridden resident shall, within 48 hours of the resident's admission or retention in the facility, notify the local fire authority with jurisdiction of the estimated length of time the resident will retain his or her bedridden status in the facility.*

R335.9 Group R. *Buildings housing protective social-care homes or in occupancies housing inmates who are not restrained need not be of one-hour fire-resistive construction when not more than two stories in height. In no case shall individual floor areas exceed 3,000 square feet (279 m^2). The fire-resistive protection of the exterior walls shall not be less than one hour where such walls are located within 5 feet (1524 mm) of the property line. Openings within such walls are not permitted. Openings in exterior nonrated walls need not be protected.*

SECTION R336
LARGE FAMILY DAY-CARE HOMES

R336.1 Large family day-care homes.

R336.2. *For purposes of clarification, Health and Safety Code Section 1597.46 is repeated.*

a. A city, county, or city and county shall not prohibit large family day-care homes on lots zoned for single-family dwellings, but shall do one of the following:

1. Classify these homes as a permitted use of residential property for zoning purposes.

2. Grant a nondiscretionary permit to use a lot zoned for a single-family dwelling to any large family day care home that complies with local ordinances prescribing reasonable standards, restrictions, and requirements concerning spacing and concentration, traffic control, parking, and noise control relating to such homes, and complies with subdivision (d) and any regulations adopted by the State Fire Marshal pursuant to that subdivision. Any noise standards shall be consistent with local noise ordinances implementing the noise element of the general plan and shall take into consideration the noise level generated by children. The permit issued pursuant to this paragraph shall be granted by the zoning administrator, if any, or if there is no zoning administrator by the person or persons designated by the planning agency to grant such permits, upon the certification without a hearing.

3. Require any large family day-care home to apply for a permit to use a lot zoned for single-family dwellings. The zoning administrator, if any, or if there is no zoning administrator, the person or persons designated by the planning agency to handle the use permits shall review and decide the applications. The use permit shall be granted if the large family day-care home complies with local ordinances, if any, prescribing reasonable standards, restrictions, and requirements concerning spacing and concentration, traffic control, parking, and noise control relating to such homes, and complies with subdivision (d) and any regulations adopted by the State Fire Marshal pursuant to that subdivision.

Any noise standards shall be consistent with local noise ordinances implementing the noise element of the general plan and shall take into consideration the noise levels generated by children.

The local government shall process any required permit as economically as possible, and fees charged for review shall not exceed the costs of the review and permit process. Not less than 10 days prior to the date on which the decision will be made on the application, the zoning administrator or person designated to handle such use permits shall give notice of the proposed use by mail or delivery to all owners shown on the last equalized assessment roll as owning real property within a 100 foot radius of the exterior boundaries of the proposed large family day care home. No hearing on the application for a permit issued pursuant to this paragraph shall be held before a decision is made unless a hearing is requested by the applicant or other affected person. The applicant or other affected person may appeal the decision. The appellant shall pay the cost, if any of the appeal.

b. A large family day-care home shall not be subject to the provisions of Division 13 (commencing with Section 21000) of the Public Resources Code.

c. Use of a single-family dwelling for the purposes of a large family day-care home shall not constitute a change of occupancy for purposes of Part 1.5 (commencing with Section 17910) of Division 13 (State Housing Law), or for purposes of local building and fire codes.

d. Large family day-care homes shall be considered as single-family residences for the purposes of the State Uniform Building Standards Code and local building and fire codes, except with respect to any additional standards specifically designed to promote the fire and life safety of the children in these homes adopted by the State Fire Marshal pursuant to this subdivision.

R336.3 Smoke alarms. *Large family day-care homes shall be equipped with State Fire Marshal approved and listed single station residential type smoke alarms. The number and placement of smoke alarms shall be determined by the enforcement authority.*

R336.4 Fire extinguishers. *Large and small family day-care homes shall be equipped with a portable fire extinguisher having a minimum 2A10BC rating.*

R336.5 Fire alarm devices. *Every large family day-care home shall be provided with at least one manual device at a location approved by the authority having jurisdiction. Such device shall actuate a fire alarm signal, which shall be audible throughout the facility at a minimum level of 15 db above ambient noise level. These devices need not be interconnected to any other fire alarm device, have a control panel or be electrically supervised or provided with emergency power. Such device or devices shall be attached to the structure and may be of any type acceptable to the enforcing agent, provided that such devices are distinctive in tone and are audible throughout the structure.*

R336.6 Compliance. *Every large family day-care home shall comply with the provisions for Group R-3 occupancies and, if appropriate, Section R336.1. For the purposes of Section R336.1, the first story shall be designated as the floor used for residential occupancy nearest to the street level which provides primary access to the building.*

Enforcement of the provisions shall be in accordance with the Health and Safety Code Sections 13145 and 13146. No city, county, city and county, or district shall adopt or enforce any building ordinance or local rule or regulation relating to the subject of fire and life safety in large-family day-care homes which is inconsistent with those standards adopted by

the State Fire Marshal, except to the extent the building ordinance or local rule or regulation applies to single-family residences in which day care is not provided.

R336.7 Special hazards. *Every unenclosed gas-fired water heater or furnace which is within the area used for child care in a large family day-care home shall be protected in such a way as to prevent children from making contact with those appliances.*

Exception: *This does not apply to kitchen stoves or ovens.*

R336.8 Exiting. *Every story or basement of a large family day-care home shall be provided with two exits which are remotely located from each other. Every required exit shall be of a size to permit the installation of a door not less than 32 inches (813mm) in clear width and not less than 6 feet 8 inches (2032 mm) in height. A manually operated horizontal sliding door may be used as one of the two required exits.*

Where basements are used for day-care purposes, one of the two required exits shall provide access directly to the exterior without entering the first story. The second exit from the basement may either pass through the story above or exit directly to the exterior.

Rooms used for day-care purposes shall not be located above the first story.

Exception: *Buildings equipped with an automatic sprinkler system throughout and which have at least one of the required exits providing access directly to the exterior. NFPA 13R may be used in large family day-care homes. The sprinkler omissions of NFPA 13R shall not apply unless approved by the enforcing agency.*

Exit doors, including manually operated horizontal sliding doors, shall be openable from the inside without use of a key or any special knowledge or effort.

SECTION R337
MATERIALS AND CONSTRUCTION METHODS FOR EXTERIOR WILDFIRE EXPOSURE

SECTION R337.1
SCOPE, PURPOSE AND APPLICATION

R337.1.1 Scope. *This chapter applies to building materials, systems and or assemblies used in the exterior design and construction of new buildings located within a Wildland-Urban Interface Fire Area as defined in Section R337.2A.*

R337.1.2 Purpose. *The purpose of this chapter is to establish minimum standards for the protection of life and property by increasing the ability of a building located in any Fire Hazard Severity Zone within State Responsibility Areas or any Wildland-Urban Interface Fire Area to resist the intrusion of flame or burning embers projected by a vegetation fire and contributes to a systematic reduction in conflagration losses.*

R337.1.3 Application. *New buildings located in any Fire Hazard Severity Zone or any Wildland-Urban Interface Fire Area designated by the enforcing agency constructed after the application date shall comply with the provisions of this chapter.*

Exceptions:

1. *Buildings of an accessory character classified as a Group U occupancy and not exceeding 120 square feet in floor area, when located at least 30 feet from an applicable building.*
2. *Buildings of an accessory character classified as Group U occupancy of any size located least 50 feet from an applicable building.*
3. *Buildings classified as a Group U Agricultural Building, as defined in Section 202 of this code (see also Appendix C – Group U Agricultural Buildings), when located at least 50 feet from an applicable building.*
4. *Additions to and remodels of buildings originally constructed prior to the applicable application date.*
5. *Group C, special buildings conforming to the limitations specified in Section 450.4.1 of the California Building Code.*

For the purposes of this section and Section R337.10, applicable building includes all buildings that have residential, commercial, educational, institutional, or similar occupancy type use.

R337.1.3.1 Application date and where required. *New buildings for which an application for a building permit is submitted on or after July 1, 2008, located in any Fire Hazard Severity Zone or Wildland Interface Fire Area shall comply with all sections of this chapter, including all of the following areas:*

1. *All unincorporated lands designated by the State Board of Forestry and Fire Protection as State Responsibility Area (SRA) including:*
   - *1.1. Moderate Fire Hazard Severity Zones*
   - *1.2. High Fire Hazard Severity Zones*
   - *1.3. Very-High Fire Hazard Severity Zones*
2. *Land designated as Very-High Fire Hazard Severity Zone by cities and other local agencies.*
3. *Land designated as Wildland Interface Fire Area by cities and other local agencies.*

   Exceptions:

   1. *New buildings located in any Fire Hazard Severity Zone within State Responsibility Areas, for which an application for a building permit is submitted on or after January 1, 2008, shall comply with all sections of this chapter.*
   2. *New buildings located in any Fire Hazard Severity Zone within State Responsibility*

Areas or any Wildland Interface Fire Area designated by cities and other local agencies for which an application for a building permit is submitted on or after December 1, 2005 but prior to July 1, 2008, shall only comply with the following sections of this chapter:

2.1. Section R337.5 – Roofing

2.2. Section R337.6 – Vents

R337.1.4 Inspection and certification. *Building permit applications and final completion approvals for buildings within the scope and application of this chapter shall comply with the following:*

1. *Building permit issuance. The local building official shall, prior to construction, provide the owner or applicant a certification that the building as proposed to be built complies with all applicable state and local building standards, including those for materials and construction methods for wildfire exposure as described in this chapter. Issuance of a building permit by the local building official for the proposed building shall be considered as complying with this section.*
2. *Building permit final. The local building official shall, upon completion of construction, provide the owner or applicant with a copy of the final inspection report that demonstrates the building was constructed in compliance with all applicable state and local building standards, including those for materials and construction methods for wildfire exposure as described in this chapter. Issuance of a certificate of occupancy by the local building official for the proposed building shall be considered as complying with this section.*

R337.1.5 Vegetation management compliance. *Prior to building permit final approval, the property shall be in compliance with the vegetation management requirements prescribed in California Fire Code Section 4906, including California Public Resources Code 4291 or California Government Code Section 51182. Acceptable methods of compliance inspection and documentation shall be determined by the enforcing agency and shall be permitted to include any of the following:*

1. *Local, state, or federal fire authority or designee authorized to enforce vegetation management requirements.*
2. *Enforcing agency.*
3. *Third party inspection and certification authorized to enforce vegetation management requirements.*
4. *Property owner certification authorized by the enforcing agency.*

R337.1.6 Application to accessory buildings and miscellaneous structures. *New accessory buildings and miscellaneous structures specified in Section R337.10 shall comply only with the requirements of that section.*

SECTION R337.2 DEFINITIONS

For the purposes of this chapter, certain terms are defined below:

CDF DIRECTOR *means the Director of the California Department of Forestry and Fire Protection.*

EXTERIOR COVERING. *The exposed siding or cladding material applied to the exterior side of an exterior wall, roof eave soffit, floor projection or exposed underfloor framing.*

FIRE PROTECTION PLAN *is a document prepared for a specific project or development proposed for a Wildland-Urban Interface Fire Area. It describes ways to minimize and mitigate potential for loss from wildfire exposure. The fire protection plan shall be in accordance with this chapter and the California Fire Code, Chapter 49. When required by the enforcing agency for the purposes of granting modifications, a fire protection plan shall be submitted. Only locally adopted ordinances that have been filed with the California Building Standards Commission or the Department of Housing and Community Development in accordance with Section 1.1.8 shall apply.*

FIRE HAZARD SEVERITY ZONES *are geographical areas designated pursuant to California Public Resources Codes Sections 4201 through 4204 and classified as Very-High, High, or Moderate in State Responsibility Areas or as Local Agency Very-High Fire Hazard Severity Zones designated pursuant to California Government Code Sections 51175 through 51189. See California Fire Code Article 86.*

The California Code of Regulations, Title 14, Section 1280 entitles the maps of these geographical areas as "Maps of the Fire Hazard Severity Zones in the State Responsibility Area of California."

IGNITION-RESISTANT MATERIAL. *A type of building material that resists ignition or sustained flaming combustion sufficiently so as to reduce losses from wildland-urban interface conflagrations under worst-case weather and fuel conditions with wildfire exposure of burning embers and small flames, as prescribed in Section R337.3 and SFM Standard 12-7A-5, Ignition-Resistant Material.*

LOCAL AGENCY VERY-HIGH FIRE HAZARD SEVERITY ZONE *means an area designated by a local agency upon the recommendation of the CDF Director pursuant to Government Code Sections 51177(c), 51178 and 5118 that is not a state responsibility area and where a local agency, city, county, city and county, or district is responsible for fire protection.*

LOG WALL CONSTRUCTION. *A type of construction in which exterior walls are constructed of solid wood members and where the smallest horizontal dimension of each solid wood member is at least 6 inches (152 mm).*

RAFTER TAIL. *The portion of roof rafter framing in a sloping roof assembly that projects beyond and overhangs an exterior wall.*

ROOF EAVE. *The lower portion of a sloping roof assembly that projects beyond and overhangs an exterior wall at*

the lower end of the rafter tails. Roof eaves may be either "open" or "enclosed." Open roof eaves have exposed rafter tails and an unenclosed space on the underside of the roof deck. Enclosed roof eaves have a boxed-in roof eave soffit with a horizontal underside or sloping rafter tails with an exterior covering applied to the underside of the rafter tails.

ROOF EAVE SOFFIT. *An enclosed boxed-in soffit under a roof eave with exterior covering material applied to the soffit framing creating a horizontal surface on the exposed underside.*

STATE RESPONSIBILITY AREA *means lands that are classified by the Board of Forestry pursuant to Public Resources Code Section 4125 where the financial responsibility of preventing and suppressing forest fires is primarily the responsibility of the state.*

WILDFIRE *is any uncontrolled fire spreading through vegetative fuels that threatens to destroy life, property or resources as defined in Public Resources Code Sections 4103 and 4104.*

WILDFIRE EXPOSURE *is one or a combination of radiant heat, convective heat, direct flame contact and burning embers being projected by vegetation fire to a structure and its immediate environment.*

WILDLAND-URBAN INTERFACE FIRE AREA *is a geographical area identified by the state as a "Fire Hazard Severity Zone" in accordance with the Public Resources Code Sections 4201 through 4204 and Government Code Sections 51175 through 51189, or other areas designated by the enforcing agency to be at a significant risk from wildfires.*

SECTION R337.3
STANDARDS OF QUALITY

R337.3.1 General. *Building material, systems, assemblies and methods of construction used in this chapter shall be in accordance with Section R337.3.*

R337.3.2 Qualification by testing. *Material and material assemblies tested in accordance with the requirements of Section R337.3 shall be accepted for use when the results and conditions of those tests are met. Product evaluation testing of material and material assemblies shall be approved or listed by the State Fire Marshal, or identified in a current report issued by an approved agency.*

R337.3.3 Approved agency. *Product evaluation testing shall be performed by an approved agency as defined in Section 1702 of the California Building Code. The scope of accreditation for the approved agency shall include building product compliance with code.*

R337.3.4 Labeling. *Material and material assemblies tested in accordance with the requirements of Section R337.3 shall bear an identification label showing the fire test results. That identification label shall be issued by a testing and/or inspecting agency approved by the State Fire Marshal.*

1. *Identification mark of the approved testing and/or inspecting agency.*
2. *Contact and identification information of the manufacturer.*
3. *Model number or identification of the product or material.*
4. *Pre-test weathering specified in this chapter.*
5. *Compliance standard as described under Section R337.3.7.*

R337.3.5 Weathering and surface treatment protection.

R337.3.5.1 General. *Material and material assemblies tested in accordance with the requirements of Section R337.3 shall maintain their fire test performance under conditions of use when installed in accordance with the manufacturers instructions.*

R337.3.5.2 Weathering. *Fire-retardant-treated wood and fire-retardant-treated wood shingles and shakes shall meet the fire test performance requirements of this chapter after being subjected to the weathering conditions contained in the following standards, as applicable to the materials and the conditions of use.*

R337.3.5.2.1 Fire-retardant-treated wood. *Fire-retardant-treated wood shall be tested in accordance with ASTM D2898 (Method A), and the requirements of Section 2303.2 of the California Building Code.*

R337.3.5.2.2 Fire-retardant-treated wood shingles and shakes. *Fire-retardant-treated wood shingles and shakes shall be approved and listed by the State Fire Marshal in accordance with Section 208(c), Title 19 California Code of Regulations.*

R337.3.5.3 Surface treatment protection. *The use of paints, coatings, stains, or other surface treatments are not an approved method of protection as required in this section.*

R337.3.6 Alternates for materials, design, tests and methods of construction. *The enforcing agency is permitted to modify the provisions of this chapter for site-specific conditions in accordance with Section 1.11.2.4. When required by the enforcing agency for the purposes of granting modifications, a fire protection plan shall be submitted in accordance with the California Fire Code, Chapter 49.*

R337.3.7 Standards of quality. *The State Fire Marshal standards for exterior wildfire exposure protection listed below and as referenced in this chapter are located in the California Referenced Standards Code, Part 12 and Chapter 44 of this code.*

SFM Standard 12-7A-1, *Exterior Wall Siding and Sheathing. A fire resistance test standard consisting of*

a 150 kW intensity direct flame exposure for a 10 minutes duration.

SFM Standard 12-7A-2, *Exterior Windows. A fire resistance test standard consisting of a 150 kW intensity direct flame exposure for an 8-minute duration.*

SFM Standard 12-7A-3, *Horizontal Projection Underside A fire resistance test standard consisting of a 300 kW intensity direct flame exposure for a 10 minute duration.*

SFM Standard 12-7A-4, *Decking. A two-part test consisting of a heat release rate (Part A) deck assembly combustion test with an under deck exposure of 80 kW intensity direct flame for a 3 minute duration, and a (Part B) sustained deck assembly combustion test consisting of a deck upper surface burning ember exposure with a 12 mph wind for 40 minutes using a 2.2 lb (1 kg) burning "Class A" size 12" × 12" × 2.25" (300 mm x 300 mm x 57 mm) roof test brand.*

SFM Standard 12-7A-4A, *Decking Alternate Method A. A heat release rate deck assembly combustion test with an under deck exposure of 80 kW intensity direct flame for a 3 minute duration.*

SFM Standard 12-7A-5, *Ignition-Resistant Material. A generic building material surface burning flame spread test standard consisting of an extended 30 minute ASTM E84 or UL 723 test method as is used for Fire-Retardant-Treated wood.*

ASTM D2898, Standard Practice for Accelerated Weathering of Fire-Retardant-Treated Wood for Fire Testing

ASTM D3909/D3909M, Standard Specification for Asphalt Roll Roofing (Glass Felt) Surfaced with Mineral Granules

ASTM E84, Standard Test Method for Surface Burning Characteristics of Building Materials

ASTM E2632/E2632M, Standard Test Method for Evaluating the Under-Deck Fire Test Response of Deck Materials

ASTM E2707, Standard Test Method for Determining Fire Penetration of Exterior Wall Assemblies Using a Direct Flame Impingement Exposure

ASTM E2726/E2726M, Standard Test Method for Evaluating the Fire-Test-Response of Deck Structures to Burning Brands

ASTM E2886/E2886M, Standard Test Method for Evaluating the Ability of Exterior Vents to Resist the Entry of Embers and Direct Flame Impingement

ASTM E2957, Standard Test Method for Resistance to Wildfire Penetration of Eaves, Soffits and Other Projections

NFPA 257, Standard on Fire Test for Window and Glass Block Assemblies

UL 723, Standard for Test for Surface Burning Characteristics of Building Materials

SECTION R337.4
IGNITION-RESISTANT CONSTRUCTION

R337.4.1 General. *The materials prescribed herein for ignition resistance shall conform to the requirements of this chapter.*

R337.4.2 Ignition-resistant materials. *Ignition-resistant materials shall comply with one of the following:*

1. *The requirements in Section R337.4.3 when tested in accordance with the test procedures set forth in ASTM E84 or UL 723,*
2. *The test procedures and requirements set forth in SFM Standard 12-7A-5 "Ignition-Resistant Material", or*
3. *One of the alternative methods in Section R337.4.4.*

R337.4.3 Conditions of acceptance for ignition-resistant material tested in accordance with ASTM E84 or UL 723. *A material shall comply with the conditions of acceptance in 1 and 2 below when the test is continued for an additional 20-minute period, meaning for a total test period of an "extended" 30-minute test period.*

1. *The material shall exhibit a flame spread index not exceeding 25 and shall show no evidence of progressive combustion following the extended 30-minute test period.*
2. *The material shall exhibit a flame front that does not progress more than $10^1/_2$ feet (3200 mm) beyond the centerline of the burner at any time during the extended 30-minute test period.*

R337.4.4 Alternative methods for determining ignition-resistant material. *Any one of the following shall be accepted as meeting the definition of ignition-resistant material:*

1. *Noncombustible material. Material that complies with the definition for noncombustible materials in Section 202.*
2. *Fire-retardant-treated wood. Fire-retardant-treated wood identified for exterior use that complies with the requirements of Section 2303.2 of the California Building Code.*
3. *Fire-retardant-treated wood shingles and shakes. Fire-retardant-treated wood shingles and shakes, as defined in Section 1505.6 of the California Building Code and listed by State Fire Marshal for use as "Class B" roof covering, shall be accepted as an Ignition-resistant wall covering material when installed over solid sheathing.*

SECTION R337.5
ROOFING

R337.5.1 General. *Roofs shall comply with the requirements of Sections R337 and R902. Roofs shall have a roofing assembly installed in accordance with its listing and the manufacturer's installation instructions.*

R337.5.2 Roof coverings. *Where the roof profile allows a space between the roof covering and roof decking, the spaces shall be constructed to resist the intrusion of flames and embers, be firestopped with approved materials or have one layer of minimum 72 pound (32.4 kg) mineral-surfaced nonperforated cap sheet complying with ASTM D3909 installed over the combustible decking.*

R337.5.3 Roof valleys. *Where valley flashing is installed, the flashing shall be not less than 0.019-inch (0.48 mm) No. 26 gage galvanized sheet corrosion-resistant metal installed over not less than one layer of minimum 72-pound (32.4 kg) mineral-surfaced nonperforated cap sheet complying with ASTM D3909, at least 36-inch-wide (914 mm) running the full length of the valley.*

R337.5.4 Roof gutters. *Roof gutters shall be provided with the means to prevent the accumulation of leaves and debris in the gutter.*

SECTION R337.6 VENTS

R337.6.1 General. *Where provided, ventilation openings for enclosed attics, enclosed eave soffit spaces, enclosed rafter spaces formed where ceilings are applied directly to the underside of roof rafters, and underfloor ventilation shall be in accordance with Section 1203 of the California Building Code and Sections R337.6.1 through R337.6.3 of this section to resist building ignition from the intrusion of burning embers and flame through the ventilation opening.*

R337.6.2 Requirements. *Ventilation openings for enclosed attics, enclosed eave soffit spaces, enclosed rafter spaces formed where ceilings are applied directly to the underside of roof rafters, and underfloor ventilation openings shall be fully covered with metal wire mesh, vents, other materials, or other devices that meet one of the following requirements:*

1. *Vents shall be listed to ASTM E2886 and comply with all of the following:*
   - *1.1. There shall be no flaming ignition of the cotton material during the Ember Intrusion Test.*
   - *1.2. There shall be no flaming ignition during the Integrity Test portion of the Flame Intrusion Test.*
   - *1.3. The maximum temperature of the unexposed side of the vent shall not exceed 662°F (350°C).*
2. *Vents shall comply with all of the following:*
   - *2.1. The dimensions of the openings therein shall be a minimum of $^1/_{16}$ inch (1.6 mm) and shall not exceed $^1/_8$ inch (3.2 mm).*
   - *2.2. The materials used shall be noncombustible.*

     Exception: *Vents located under the roof covering, along the ridge of roofs, with the exposed surface of the vent covered by noncombustible wire mesh, may be of combustible materials.*
   - *2.3. The materials used shall be corrosion resistant.*

R337.6.3 Ventilation openings on the underside of eaves and cornices. *Vents shall not be installed on the underside of eaves and cornices.*

Exceptions:

1. *Vents listed to ASTM E2886 and complying with all of the following:*
   - *1.1. There shall be no flaming ignition of the cotton material during the Ember Intrusion Test.*
   - *1.2. There shall be no flaming ignition during the Integrity Test portion of the Flame Intrusion Test.*
   - *1.3. The maximum temperature of the unexposed side of the vent shall not exceed 662°F (350°C).*
2. *The enforcing agency shall be permitted to accept or approve special eave and cornice vents that resist the intrusion of flame and burning embers.*
3. *Vents complying with the requirements of Section R337.6.2 shall be permitted to be installed on the underside of eaves and cornices in accordance with either one of the following conditions:*
   - *3.1. The attic space being ventilated is fully protected by an automatic sprinkler system installed in accordance with Section 903.3.1.1 of the California Building Code or,*
   - *3.2. The exterior wall covering and exposed underside of the eave are of noncombustible material, or ignition-resistant materials, as determined in accordance with SFM Standard 12-7A-5 Ignition-Resistant Material the requirements of Section R337.4.3, and the vent is located more than 12 feet (3.66 m) from the ground or walking surface of a deck, porch, patio, or similar surface.*

SECTION R337.7 EXTERIOR COVERING

R337.7.1 Scope. *The provisions of this section shall govern the materials and construction methods used to resist building ignition and/or safeguard against the intrusion of flames resulting from small ember and short-term direct flame contact exposure.*

R337.7.2 General. *The following exterior covering materials and/or assemblies shall comply with this section:*

1. *Exterior wall covering material.*

2. *Exterior wall assembly.*
3. *Exterior exposed underside of roof eave overhangs.*
4. *Exterior exposed underside of roof eave soffits.*
5. *Exposed underside of exterior porch ceilings.*
6. *Exterior exposed underside of floor projections.*
7. *Exterior underfloor areas.*

Exceptions:

1. *Exterior wall architectural trim, embellishments, fascias and gutters.*
2. *Roof or wall top cornice projections and similar assemblies.*
3. *Roof assembly projections over gable end walls.*
4. *Solid wood rafter tails and solid wood blocking installed between rafters having minimum dimension 2 inch (50.8 mm) nominal.*
5. *Deck walking surfaces shall comply with Section R337.9 only.*

R337.7.3 Exterior walls. *The exterior wall covering or wall assembly shall comply with one of the following requirements:*

1. *Noncombustible material.*
2. *Ignition-resistant material.*
3. *Sawn lumber or glue-laminated wood with the smallest minimum nominal dimension of 4 inches (102 mm). Sawn or glue-laminated planks splined, tongue-and-grove, or set close together and well spiked.*
4. *Log wall construction assembly.*
5. *Wall assemblies that have been tested in accordance with the test procedures for a 10-minute direct flame contact exposure test set forth in ASTM E2707 with the conditions of acceptance shown in Section R337.7.3.1.*
6. *Wall assemblies that meet the performance criteria in accordance with the test procedures for a 10-minute direct flame contact exposure test set forth in SFM Standard 12-7A-1.*

Exception: *Any of the following shall be deemed to meet the assembly performance criteria and intent of this section:*

1. *One layer of $^5/_8$-inch Type X gypsum sheathing applied behind the exterior covering or cladding on the exterior side of the framing.*
2. *The exterior portion of a 1-hour fire resistive exterior wall assembly designed for exterior fire exposure including assemblies using the gypsum panel and sheathing products listed in the Gypsum Association Fire Resistance Design Manual.*

R337.7.3.1 Conditions of acceptance when tested in accordance with ASTM E2707. *The ASTM E2707 test shall be conducted on a minimum of three test specimens and the conditions of acceptance in 1 and 2 below shall be met. If any one of the three tests does not meet the conditions of acceptance, three additional tests shall be run. All of the additional tests shall meet the conditions of acceptance.*

1. *Absence of flame penetration through the wall assembly at any time.*
2. *Absence of evidence of glowing combustion on the interior surface of the assembly at the end of the 70-minute test.*

R337.7.3.2 Extent of exterior wall covering. *Exterior wall coverings shall extend from the top of the foundation to the roof, and terminate at 2 inch (50.8 mm) nominal solid wood blocking between rafters at all roof overhangs, or in the case of enclosed eaves, terminate at the enclosure.*

R337.7.4 Open roof eaves. *The exposed roof deck on the underside of unenclosed roof eaves shall consist of one of the following:*

1. *Noncombustible material.*
2. *Ignition-resistant material.*
3. *One layer of $^5/_8$-inch Type X gypsum sheathing applied behind an exterior covering on the underside exterior of the roof deck.*
4. *The exterior portion of a 1-hour fire resistive exterior wall assembly applied to the underside of the roof deck designed for exterior fire exposure including assemblies using the gypsum panel and sheathing products listed in the Gypsum Association Fire Resistance Design Manual.*

Exceptions: *The following materials do not require protection:*

1. *Solid wood rafter tails on the exposed underside of open roof eaves having a minimum nominal dimension of 2 inch (50.8 mm).*
2. *Solid wood blocking installed between rafter tails on the exposed underside of open roof eaves having a minimum nominal dimension of 2 inch (50.8 mm).*
3. *Gable end overhangs and roof assembly projections beyond an exterior wall other than at the lower end of the rafter tails.*
4. *Fascia and other architectural trim boards.*

R337.7.5 Enclosed roof eaves and roof eave soffits. *The exposed underside of enclosed roof eaves having either a boxed-in roof eave soffit with a horizontal underside, or sloping rafter tails with an exterior covering applied to the underside of the rafter tails, shall be protected by one of the following:*

1. *Noncombustible material.*
2. *Ignition-resistant material.*
3. *One layer of $^5/_8$-inch Type X gypsum sheathing applied behind an exterior covering on the underside of the rafter tails or soffit.*

4. *The exterior portion of a 1-hour fire resistive exterior wall assembly applied to the underside of the rafter tails or soffit including assemblies using the gypsum panel and sheathing products listed in the Gypsum Association Fire Resistance Design Manual.*
5. *Boxed-in roof eave soffit assemblies with a horizontal underside that meet the performance criteria in Section R337.7.10 when tested in accordance with the test procedures set forth in ASTM E2957.*
6. *Boxed-in roof eave soffit assemblies with a horizontal underside that meet the performance criteria in accordance with the test procedures set forth in SFM Standard 12-7A-3.*

Exceptions: *The following materials do not require protection:*

1. *Gable end overhangs and roof assembly projections beyond an exterior wall other than at the lower end of the rafter tails.*
2. *Fascia and other architectural trim boards.*

R337.7.6 Exterior porch ceilings. *The exposed underside of exterior porch ceilings shall be protected by one of the following:*

1. *Noncombustible material.*
2. *Ignition-resistant material.*
3. *One layer of $^5/_8$-inch Type X gypsum sheathing applied behind the exterior covering on the underside of the ceiling.*
4. *The exterior portion of a 1-hour fire resistive exterior wall assembly applied to the underside of the ceiling assembly including assemblies using the gypsum panel and sheathing products listed in the Gypsum Association Fire Resistance Design Manual.*
5. *Porch ceiling assemblies with a horizontal underside that meet the performance criteria in Section R337.7.10 when tested in accordance with the test procedures set forth in ASTM E2957.*
6. *Porch ceiling assemblies with a horizontal underside that meet the performance criteria in accordance with the test procedures set forth in SFM Standard 12-7A-3.*

Exception: *Architectural trim boards.*

R337.7.7 Floor projections. *The exposed underside of a cantilevered floor projection where a floor assembly extends over an exterior wall shall be protected by one of the following:*

1. *Noncombustible material.*
2. *Ignition-resistant material.*
3. *One layer of $^5/_8$-inch Type X gypsum sheathing applied behind an exterior covering on the underside of the floor projection.*
4. *The exterior portion of a 1-hour fire resistive exterior wall assembly applied to the underside of the floor projection including assemblies using the gypsum panel and sheathing products listed in the Gypsum Association Fire Resistance Design Manual.*
5. *The underside of a floor projection assembly that meet the performance criteria in Section R337.7.10 when tested in accordance with the test procedures set forth in ASTM E2957.*
6. *The underside of a floor projection assembly that meet the performance criteria in accordance with the test procedures set forth in SFM Standard 12-7A-3.*

Exception: *Architectural trim boards.*

R337.7.8 Underfloor protection. *The underfloor area of elevated or overhanging buildings shall be enclosed to grade in accordance with the requirements of this chapter or the underside of the exposed underfloor shall consist of one of the following:*

1. *Noncombustible material.*
2. *Ignition-resistant material.*
3. *One layer of $^5/_8$-inch Type X gypsum sheathing applied behind an exterior covering on the underside of the floor projection.*
4. *The exterior portion of a 1-hour fire resistive exterior wall assembly applied to the underside of the floor including assemblies using the gypsum panel and sheathing products listed in the Gypsum Association Fire Resistance Design Manual.*
5. *The underside of a floor assembly that meets the performance criteria in Section R337.7.10 when tested in accordance with the test procedures set forth in either of the following:*
   - *5.1. SFM Standard 12-7A-3; or*
   - *5.2. ASTM E2957.*
6. *The underside of a floor assembly that meets the performance criteria in accordance with the test procedures set forth in SFM Standard 12-7A-3.*

Exception: *Structural columns and beams do not require protection when they are constructed with sawn lumber or glue laminated wood with the smallest minimum nominal dimension of 4 inches (102 mm). Sawn or glue-laminated planks splined, tongue-and-grove, or set close together and well spiked.*

R337.7.9 Underside of appendages. *When required by the enforcing agency the underside of overhanging appendages shall be enclosed to grade in accordance with the requirements of this chapter or the underside of the exposed underfloor shall consist of one of the following:*

1. *Noncombustible material.*
2. *Ignition-resistant material.*
3. *One layer of $^5/_8$-inch Type X gypsum sheathing applied behind an exterior covering on the underside of the floor projection.*
4. *The exterior portion of a 1-hour fire resistive exterior wall assembly applied to the underside of the floor including assemblies using the gypsum panel*

and sheathing products listed in the Gypsum Association Fire Resistance Design Manual.

5. *The underside of a floor assembly that meets the performance criteria in accordance with the test procedures set forth in either of the following:*

   5.1. *SFM Standard 12-7A-3; or*

   5.2. *ASTM E2957;*

Exception: *Structural columns and beams do not require protection when they are constructed with sawn lumber or glue-laminated wood with the smallest minimum nominal dimension of 4 inches (102 mm). Sawn or glue-laminated planks splined, tongue-and-grove, or set close together and well spiked.*

R337.7.10 Conditions of acceptance when tested in accordance with ASTM E2957. *The test shall be conducted on a minimum of three test specimens and the conditions of acceptance in 1 through 3 below shall be met. If any one of the three tests does not meet the conditions of acceptance, three additional tests shall be run. All of the additional tests shall meet the conditions of acceptance.*

1. *Absence of flame penetration of the eaves or horizontal projection assembly at any time.*
2. *Absence of structural failure of the eaves or horizontal projection subassembly at any time.*
3. *Absence of sustained combustion of any kind at the conclusion of the 40-minute test.*

SECTION R337.8
EXTERIOR WINDOWS, SKYLIGHTS AND DOORS

R337.8.1 General.

R337.8.2 Exterior glazing. *The following exterior glazing materials and/or assemblies shall comply with this section:*

1. *Exterior windows.*
2. *Exterior glazed doors.*
3. *Glazed openings within exterior doors.*
4. *Glazed openings within exterior garage doors.*
5. *Exterior structural glass veneer.*
6. *Skylights.*
7. *Vents.*

R337.8.2.1 Exterior windows, skylights and exterior glazed door assembly requirements. *Exterior windows, skylights and exterior glazed door assemblies shall comply with one of the following requirements:*

1. *Be constructed of multipane glazing with a minimum of one tempered pane meeting the requirements of Section R308 Safety Glazing, or*
2. *Be constructed of glass block units, or*
3. *Have a fire-resistance rating of not less than 20 minutes when tested according to NFPA 257, or*
4. *Be tested to meet the performance requirements of SFM Standard 12-7A-2.*

R337.8.2.2 Operable skylights. *Operable skylights shall be protected by a noncombustible mesh screen where the dimensions of the openings in the screen shall not exceed $^1/_8$ inch (3.2 mm).*

R337.8.2.3 Structural glass veneer. *The wall assembly behind structural glass veneer shall comply with Section R337.7.3 Exterior walls.*

R337.8.3 Exterior doors. *Exterior doors shall comply with one of the following:*

1. *The exterior surface or cladding shall be of noncombustible material, or*
2. *The exterior surface or cladding shall be of ignition-resistant material, or*
3. *The exterior door shall be constructed of solid core wood that complies with the following requirements:*

   3.1. *Stiles and rails shall not be less than $1^3/_8$ inches thick*

   3.2. *Panels shall not be less than $1^1/_4$ inches thick, except for the exterior perimeter of the panel that shall be permitted to taper to a tongue not less than $^3/_8$ inch thick.*

4. *The exterior door assembly shall have a fire-resistance rating of not less than 20 minutes when tested according to NFPA 252.*
5. *The exterior surface or cladding shall be tested to meet the performance requirements of Section R337.7.3.1 when tested in accordance with ASTM E2707.*
6. *The exterior surface or cladding shall be tested to meet the performance requirements of SFM Standard 12-7A-1.*

R337.8.3.1 Exterior door glazing. *Glazing in exterior doors shall comply with Section R337.8.2.1.*

R337.8.4 Garage door perimeter gap. *Exterior garage doors shall resist the intrusion of embers from entering by preventing gaps between doors and door openings, at the bottom, sides and tops of doors, from exceeding $^1/_8$ inch (3.2 mm). Gaps between doors and door openings shall be controlled by one of the following methods:*

1. *Weather stripping products made of materials that: (a) have been tested for tensile strength in accordance with ASTM D638 (Standard Test Method for Tensile Properties of Plastics) after exposure to ASTM G155 (Standard Practice for Operating Xenon Arc Light Apparatus for Exposure of Non-Metallic Materials) for a period of 2,000 hours, where the maximum allowable difference in tensile strength values between exposed and nonexposed samples does not exceed 10 percent and (b) exhibit a V-2 or better flammability rating when tested to UL 94, Standard for Tests for Flammability of Plastic Materials for Parts in Devices and Appliances.*

2. *Door overlaps onto jambs and headers.*
3. *Garage door jambs and headers covered with metal flashing.*

SECTION R337.9 DECKING

R337.9.1 General. *The walking surface material of decks, porches, balconies and stairs shall comply with the requirements of this section.*

R337.9.2 Where required. *The walking surface material of decks, porches, balconies and stairs shall comply with the requirements of this section when any portion of such surface is within 10 feet (3048 mm) of the building.*

R337.9.3 Decking surfaces. *The walking surface material of decks, porches, balconies and stairs shall be constructed with one of the following materials:*

1. *Material that complies with the performance requirements of Section R337.9.4 when tested in accordance with both ASTM E2632 and ASTM E2726.*
2. *Ignition-resistant material that complies with the performance requirements of Section R337.4.3 when tested in accordance with ASTM E84 or UL 723.*
3. *Material that complies with the performance requirements of both SFM Standard 12-7A-4 and SFM Standard 12-7A-5.*
4. *Exterior fire retardant treated wood.*
5. *Noncombustible material.*
6. *Any material that complies with the performance requirements of SFM Standard 12-7A-4A when attached exterior wall covering is also composed of noncombustible or ignition-resistant material.*

   Exception: *Wall material may be of any material that otherwise complies with this chapter when the decking surface material complies with the performance requirements ASTM E84 with a Class B flame spread rating.*

7. *Any material that complies with the performance requirements of Section R337.9.5 when tested in accordance with ASTM E2632 and when attached exterior wall covering is also composed of only noncombustible or ignition-resistant materials.*

   Exception: *Wall material shall be permitted to be of any material that otherwise complies with this chapter when the decking surface material complies with the performance requirements ASTM E84 with a Class B flame spread index.*

R337.9.4 Requirements for type of ignition-resistant material in Section R337.9.3, Item 1. *The material shall be tested in accordance with both ASTM E2632 and ASTM E2726 and shall comply with the conditions of acceptance in Sections R337.9.4.1 and R337.9.4.2. The material shall also be tested in accordance with ASTM E84 or UL 723 and comply with the performance requirements of Section R337.4.3.*

R337.9.4.1 Conditions of acceptance for ASTM E2632. *The ASTM E2632 test shall be conducted on a minimum of three test specimens and the conditions of acceptance in Items 1 through 3 below shall be met. If any one of the three tests does not meet the conditions of acceptance, three additional tests shall be run. All of the additional tests shall meet the conditions of acceptance.*

1. *Peak heat release rate of less than or equal to 25 kW/ft^2 (269 kW/m^2).*
2. *Absence of sustained flaming or glowing combustion of any kind at the conclusion of the 40-minute observation period.*
3. *Absence of falling particles that are still burning when reaching the burner or floor.*

R337.9.4.2 Conditions of acceptance for ASTM E2726. *The ASTM E2726 test shall be conducted, using a "Class A" size roof test brand, on a minimum of three test specimens and the conditions of acceptance in Items 1 and 2 below shall be met. If any one of the three test specimens does not meet the conditions of acceptance, three additional tests shall be run. All of the additional tests shall meet the conditions of acceptance.*

1. *Absence of sustained flaming or glowing combustion of any kind at the conclusion of the 40-minute observation period.*
2. *Absence of falling particles that are still burning when reaching the burner or floor.*

R337.9.5 Requirements for type of material in Section R337.9.3, Item 7. *The material shall be tested in accordance with ASTM E2632 and shall comply with the following condition of acceptance. The ASTM E2632 test shall be conducted on a minimum of three test specimens and the peak heat release rate shall be less than or equal to 25 kW/ft^2 (269 kW/m^2). If any one of the three tests does not meet the conditions of acceptance, three additional tests shall be run. All the additional tests shall meet the condition of acceptance.*

SECTION R337.10 ACCESSORY STRUCTURES

R337.10.1 General. *Accessory buildings and miscellaneous structures defined in this section that have the potential to pose a significant exterior fire exposure hazard to applicable buildings during wildfires shall be constructed to conform to the requirements of this section.*

R337.10.2 Applicability. *The provisions of this section shall apply to the buildings covered by Section R337.1.3 Exception 1. This section shall also apply to specified attached and detached miscellaneous structures that require a building permit, including but not limited to; trellises, arbors, patio covers, gazebos and similar structures.*

Exceptions:

1. *Decks shall comply with the requirements of Section R337.9.*

2. *Awnings and canopies shall comply with the requirements of Section 3105 of the California Building Code.*
3. *Exterior wall architectural trim, embellishments and fascia.*

> ***R337.10.3 Where required.*** *No requirements shall apply to accessory buildings or miscellaneous structures when located at least 50 feet from an applicable building. Applicable accessory buildings and attached miscellaneous structures, or detached miscellaneous structures that are installed at a distance of less than 3 feet from an applicable building, shall comply with this section. When required by the enforcing agency, detached miscellaneous structures that are installed at a distance of more than 3 feet but less than 50 feet from an applicable building shall comply with the requirements of this section.*

R337.10.3.1 Accessory building requirements. *Applicable accessory buildings that are less than 120 square feet in floor area and are located more than 30 feet but less than 50 feet from an applicable building shall be constructed of noncombustible materials or of ignition-resistant materials as described in Section R337.4.2.*

R337.10.3.2 Attached miscellaneous structure requirements. *Applicable miscellaneous structures that are attached to, or installed at a distance of less than 3 feet from, an applicable building shall be constructed of noncombustible materials or of ignition-resistant materials as described in Section R337.4.2.*

R337.10.3.3 Detached miscellaneous structure requirements. *When required by the enforcing agency, applicable detached miscellaneous structures that are installed at a distance of more than 3 feet but less than 50 feet from an applicable building shall be constructed of noncombustible materials or of ignition-resistant materials as described in Section R337.4.3.*

SECTION R338
ELECTRIC VEHICLE

R338.1 Electric vehicle. *An automotive-type vehicle for highway use, such as passenger automobiles, buses, trucks, vans and the like, primarily powered by an electric motor that draws current from a rechargeable storage battery, fuel cell, photovoltaic array or other source of electric current. For the purpose of this chapter, electric motorcycles and similar type vehicles and off-road self-propelled electric vehicles such as industrial trucks, hoists, lifts, transports, golf carts, airline ground support equipment, tractors, boats and the like, are not included.*

R338.2 Charging. *In any building or interior area used for charging electric vehicles, electrical equipment shall be installed in accordance with the California Electrical Code.*

R338.3 Ventilation. *Mechanical exhaust ventilation, when required by the California Electrical Code shall be provided at a rate as required by Article 625 or as required by Section 1203 of the California Building Code whichever is greater. The ventilation system shall include both the supply and exhaust equipment and shall be permanently installed and located to intake supply air from the outdoors, and vent the exhaust directly to, the outdoors without conducting the exhaust air through other spaces within the building.*

Exception: *Positive pressure ventilation systems shall only be allowed in buildings or areas that have been designed and approved for that application.*

R338.4 Electrical interface. *The electrical supply circuit to electrically powered mechanical ventilation equipment shall be interlocked with the recharging equipment used to supply the vehicle(s) being charged, and shall remain energized during the entire charging cycle. Electric vehicle recharging equipment shall be marked or labeled in accordance with the California Electrical Code.*

Exceptions:

1. *Exhaust ventilation shall not be required in areas with an approved engineered ventilation system, which maintains a hydrogen gas concentration at less than 25 percent of the lower flammability limit.*
2. *Mechanical exhaust ventilation for hydrogen shall not be required where the charging equipment utilized is installed and listed for indoor charging of electric vehicles without ventilation.*

SECTION R340
POLLUTANT CONTROL

R340.1 Finish material pollutant control. *Finish materials including adhesives, sealants, caulks, paints and coatings, aerosol paints and coatings, carpet systems, carpet cushion, carpet adhesive, resilient flooring systems and composite wood products shall meet the volatile organic compound (VOC) emission limits in accordance with the California Green Building Standards Code, Chapter 4, Division 4.5.*

CALIFORNIA RESIDENTIAL CODE – MATRIX ADOPTION TABLE
CHAPTER 4 – FOUNDATIONS

(Matrix Adoption Tables are nonregulatory, intended only as an aid to the code user. See Chapter 1 for state agency authority and building applications.)

Adopting agency	BSC	BSC-CG	SFM	HCD			DSA			OSHPD						BSCC	DPH	AGR	DWR	CEC	CA	SL	SLC
				1	2	1/AC	AC	SS	SS/CC	1	1R	2	3	4	5								
Adopt entire chapter																							
Adopt entire chapter as amended (amended sections listed below)				X																			
Adopt only those sections that are listed below																							
Chapter / Section																							
R401.2				X																			
R401.4.1.1 through *R401.4.1.1.5*				X																			
R404.5.1				X																			
R408.3				X																			
R408.4				X																			

CHAPTER 4

FOUNDATIONS

User note:

About this chapter: *Chapter 4 provides requirements for constructing footings and walls for foundations of wood, masonry, concrete and precast concrete. In addition to a foundation's ability to support the required design loads, this chapter addresses several other factors that can affect foundation performance. These include controlling surface water and subsurface drainage, requiring soil tests where conditions warrant and evaluating proximity to slopes and minimum depth requirements. This chapter also provides requirements to minimize adverse effects of moisture, decay and pests in basements and crawl spaces.*

SECTION R401
GENERAL

R401.1 Application. The provisions of this chapter shall control the design and construction of the foundation and foundation spaces for buildings. In addition to the provisions of this chapter, the design and construction of foundations in flood hazard areas as established by Table R301.2(1) shall meet the provisions of Section R322. Wood foundations shall be designed and installed in accordance with AWC PWF.

Exception: The provisions of this chapter shall be permitted to be used for wood foundations only in the following situations:

1. In buildings that have not more than two floors and a roof.
2. Where interior basement and foundation walls are constructed at intervals not exceeding 50 feet (15 240 mm).

Wood foundations in Seismic Design Category D_0, D_1 or D_2 shall be designed in accordance with accepted engineering practice.

R401.2 Requirements. Foundation construction shall be capable of accommodating all loads in accordance with Section R301 and of transmitting the resulting loads to the supporting soil. Fill soils that support footings and foundations shall be designed, installed and tested in accordance with accepted engineering practice.

Note: See Section R301.1.1.1 for limited-density owner-built rural dwellings.

R401.3 Drainage. Surface drainage shall be diverted to a storm sewer conveyance or other approved point of collection that does not create a hazard. Lots shall be graded to drain surface water away from foundation walls. The grade shall fall not fewer than 6 inches (152 mm) within the first 10 feet (3048 mm).

Exception: Where lot lines, walls, slopes or other physical barriers prohibit 6 inches (152 mm) of fall within 10 feet (3048 mm), drains or swales shall be constructed to ensure drainage away from the structure. Impervious surfaces within 10 feet (3048 mm) of the building foundation shall be sloped not less than 2 percent away from the building.

R401.4 Soil tests. Where quantifiable data created by accepted soil science methodologies indicate expansive soils, compressible soils, shifting soils or other questionable soil characteristics are likely to be present, the building official shall determine whether to require a soil test to determine the soil's characteristics at a particular location. This test shall be done by an approved agency using an approved method.

R401.4.1 Geotechnical evaluation. In lieu of a complete geotechnical evaluation, the load-bearing values in Table R401.4.1 shall be assumed.

TABLE R401.4.1
PRESUMPTIVE LOAD-BEARING VALUES OF FOUNDATION MATERIALS[a]

CLASS OF MATERIAL	LOAD-BEARING PRESSURE (pounds per square foot)
Crystalline bedrock	12,000
Sedimentary and foliated rock	4,000
Sandy gravel and/or gravel (GW and GP)	3,000
Sand, silty sand, clayey sand, silty gravel and clayey gravel (SW, SP, SM, SC, GM and GC)	2,000
Clay, sandy, silty clay, clayey silt, silt and sandy siltclay (CL, ML, MH and CH)	1,500[b]

For SI: 1 pound per square foot = 0.0479 kPa.

a. Where soil tests are required by Section R401.4, the allowable bearing capacities of the soil shall be part of the recommendations.

b. Where the building official determines that in-place soils with an allowable bearing capacity of less than 1,500 psf are likely to be present at the site, the allowable bearing capacity shall be determined by a soils investigation.

R401.4.1.1 General and where required for applications listed in Section 1.8.2.1.1 regulated by the Department of Housing and Community Development. *Foundations and soils investigations shall be conducted in conformance with Health and Safety Code Sections 17953 through 17957 as summarized below.*

R401.4.1.1.1 Preliminary soil report. *Each city, county, or city and county shall enact an ordinance which requires a preliminary soil report, prepared by a civil engineer who is registered by the state. The report shall be based upon adequate test borings or excavations, of every subdivision, where a tentative and final map is required pursuant to Section 66426 of the Government Code.*

The preliminary soil report may be waived if the building department of the city, county or city and county, or other enforcement agency charged with the administration and enforcement of the provisions of Section R401.4.1.1, shall determine that, due to the knowledge such department has as to the soil qualities of the soil of the subdivision or lot, no preliminary analysis is necessary.

R401.4.1.1.2 Soil investigation by lot, necessity, preparation, and recommendations. *If the preliminary soil report indicates the presence of critically expansive soils or other soil problems which, if not corrected, would lead to structural defects, such ordinance shall require a soil investigation of each lot in the subdivision.*

The soil investigation shall be prepared by a civil engineer who is registered in this state. It shall recommend corrective action which is likely to prevent structural damage to each dwelling proposed to be constructed on the expansive soil.

R401.4.1.1.3 Approval, building permit conditions, appeal. *The building department of each city, county or city and county, or other enforcement agency charged with the administration and enforcement of the provisions of this code, shall approve the soil investigation if it determines that the recommended action is likely to prevent structural damage to each dwelling to be constructed. As a condition to the building permit, the ordinance shall require that the approved recommended action be incorporated in the construction of each dwelling. Appeal from such determination shall be to the local appeals board.*

R401.4.1.1.4 Liability. *A city, county, or city and county or other enforcement agency charged with the administration and enforcement of the provisions of Section R401.4.1.1, is not liable for any injury which arises out of any act or omission of the city, county or city and county, or other enforcement agency, or a public employee or any other person under Section R401.4.1.1.1, R401.4.1.1.2 or R401.4.1.1.3.*

R401.4.1.1.5 Alternate procedures. *The governing body of any city, county, or city and county may enact an ordinance prescribing an alternate procedure which is equal to or more restrictive than the procedures specified in Sections R401.4.1.1.1, R401.4.1.1.2 and R401.1.1.3.*

R401.4.2 Compressible or shifting soil. Instead of a complete geotechnical evaluation, where top or subsoils are compressible or shifting, they shall be removed to a depth and width sufficient to ensure stable moisture content in each active zone and shall not be used as fill or stabilized within each active zone by chemical, dewatering or presaturation.

SECTION R402
MATERIALS

R402.1 Wood foundations. Wood foundation systems shall be designed and installed in accordance with the provisions of this code.

R402.1.1 Fasteners. Fasteners used below grade to attach plywood to the exterior side of exterior basement or crawl-space wall studs, or fasteners used in knee wall construction, shall be of Type 304 or 316 stainless steel. Fasteners used above grade to attach plywood and all lumber-to-lumber fasteners except those used in knee wall construction shall be of Type 304 or 316 stainless steel, silicon bronze, copper, hot-dipped galvanized (zinc coated) steel nails, or hot-tumbled galvanized (zinc coated) steel nails. Electro-galvanized steel nails and galvanized (zinc coated) steel staples shall not be permitted.

R402.1.2 Wood treatment. Lumber and plywood shall be pressure-preservative treated and dried after treatment in accordance with AWPA U1 (Commodity Specification A, Special Requirement 4.2), and shall bear the label of an accredited agency. Where lumber or plywood is cut or drilled after treatment, the treated surface shall be field treated with copper naphthenate, the concentration of which shall contain not less than 2-percent copper metal, by repeated brushing, dipping or soaking until the wood cannot absorb more preservative.

R402.2 Concrete. Concrete shall have a minimum specified compressive strength of f'_c, as shown in Table R402.2. Concrete subject to moderate or severe weathering as indicated in Table R301.2(1) shall be air entrained as specified in Table R402.2. The maximum weight of fly ash, other pozzolans, silica fume, slag or blended cements that is included in concrete mixtures for garage floor slabs and for exterior porches, carport slabs and steps that will be exposed to deicing chemicals shall not exceed the percentages of the total weight of cementitious materials specified in Section 19.3.3.4 of ACI 318. Materials used to produce concrete and testing thereof shall comply with the applicable standards listed in Chapters 19 and 20 of ACI 318 or ACI 332.

R402.2.1 Materials for concrete. Materials for concrete shall comply with the requirements of Section R608.5.1.

R402.3 Precast concrete. Precast concrete foundations shall be designed in accordance with Section R404.5 and shall be installed in accordance with the provisions of this code and the manufacturer's instructions.

R402.3.1 Precast concrete foundation materials. Materials used to produce precast concrete foundations shall meet the following requirements.

1. All concrete used in the manufacture of precast concrete foundations shall have a minimum compressive strength of 5,000 psi (34 470 kPa) at 28 days. Concrete exposed to a freezing and thawing environment shall be air entrained with a minimum total air content of 5 percent.
2. Structural reinforcing steel shall meet the requirements of ASTM A615, A706 or A996. The minimum yield strength of reinforcing steel shall be 40,000 psi (Grade 40) (276 MPa). Steel reinforcement for precast concrete foundation walls shall have a minimum concrete cover of $^3/_4$ inch (19.1 mm).
3. Panel-to-panel connections shall be made with Grade II steel fasteners.
4. The use of nonstructural fibers shall conform to ASTM C1116.
5. Grout used for bedding precast foundations placed on concrete footings shall meet ASTM C1107.

TABLE R402.2
MINIMUM SPECIFIED COMPRESSIVE STRENGTH OF CONCRETE

TYPE OR LOCATION OF CONCRETE CONSTRUCTION	MINIMUM SPECIFIED COMPRESSIVE STRENGTH[a] (f'_c)		
	Weathering Potential[b]		
	Negligible	Moderate	Severe
Basement walls, foundations and other concrete not exposed to the weather	2,500	2,500	2,500[c]
Basement slabs and interior slabs on grade, except garage floor slabs	2,500	2,500	2,500[c]
Basement walls, foundation walls, exterior walls and other vertical concrete work exposed to the weather	2,500	3,000[d]	3,000[d]
Porches, carport slabs and steps exposed to the weather, and garage floor slabs	2,500	3,000[d, e, f]	3,500[d, e, f]

For SI: 1 pound per square inch = 6.895 kPa.

a. Strength at 28 days psi.

b. See Table R301.2(1) for weathering potential.

c. Concrete in these locations that is subject to freezing and thawing during construction shall be air-entrained concrete in accordance with Footnote d.

d. Concrete shall be air-entrained. Total air content (percent by volume of concrete) shall be not less than 5 percent or more than 7 percent.

e. See Section R402.2 for maximum cementitious materials content.

f. For garage floors with a steel-troweled finish, reduction of the total air content (percent by volume of concrete) to not less than 3 percent is permitted if the specified compressive strength of the concrete is increased to not less than 4,000 psi.

R402.4 Masonry. Masonry systems shall be designed and installed in accordance with this chapter and shall have a minimum specified compressive strength of 1,500 psi (10.3 MPa).

SECTION R403
FOOTINGS

R403.1 General. All exterior walls shall be supported on continuous solid or fully grouted masonry or concrete footings, crushed stone footings, wood foundations, or other approved structural systems that shall be of sufficient design to accommodate all loads according to Section R301 and to transmit the resulting loads to the soil within the limitations as determined from the character of the soil. Footings shall be supported on undisturbed natural soils or engineered fill. Concrete footing shall be designed and constructed in accordance with the provisions of Section R403 or in accordance with ACI 332.

R403.1.1 Minimum size. The minimum width, W, and thickness, T, for concrete footings shall be in accordance with Tables R403.1(1) through R403.1(3) and Figure R403.1(1) or R403.1.3, as applicable. The footing width shall be based on the load-bearing value of the soil in accordance with Table R401.4.1. Footing projections, P, shall be not less than 2 inches (51 mm) and shall not exceed the thickness of the footing. Footing thickness and projection for fireplaces shall be in accordance with Section R1001.2. The size of footings supporting piers and columns shall be based on the tributary load and allowable soil pressure in accordance with Table R401.4.1. Footings for wood foundations shall be in accordance with the details set forth in Section R403.2, and Figures R403.1(2) and R403.1(3). Footings for precast foundations shall be in accordance with the details set forth in Section R403.4, Table R403.4, and Figures R403.4(1) and R403.4(2).

R403.1.2 Continuous footing in Seismic Design Categories D_0, D_1 and D_2. Exterior walls of buildings located in Seismic Design Categories D_0, D_1 and D_2 shall be supported by continuous solid or fully grouted masonry or concrete footings. Other footing materials or systems shall be designed in accordance with accepted engineering practice. Required interior braced wall panels in buildings located in Seismic Design Categories D_0, D_1 and D_2 with plan dimensions greater than 50 feet (15 240 mm) shall be supported by continuous solid or fully grouted masonry or concrete footings in accordance with Section R403.1.3.4, except for two-story buildings in Seismic Design Category D_2, in which all braced wall panels, interior and exterior, shall be supported on continuous foundations.

Exception: Two-story buildings shall be permitted to have interior braced wall panels supported on continuous foundations at intervals not exceeding 50 feet (15 240 mm) provided that:

1. The height of cripple walls does not exceed 4 feet (1219 mm).
2. First-floor braced wall panels are supported on doubled floor joists, continuous blocking or floor beams.
3. The distance between bracing lines does not exceed twice the building width measured parallel to the braced wall line.

R403.1.3 Footing and stem wall reinforcing in Seismic Design Categories D_0, D_1, and D_2. Concrete footings located in Seismic Design Categories D_0, D_1 and D_2, as established in Table R301.2(1), shall have minimum reinforcement in accordance with this section and Figure R403.1.3. Reinforcement shall be installed with support and cover in accordance with Section R403.1.3.5.

R403.1.3.1 Concrete stem walls with concrete footings. In Seismic Design Categories D_0, D_1 and D_2 where a construction joint is created between a concrete footing and a concrete stem wall, not fewer than one No. 4 vertical bar shall be installed at not more than 4 feet (1219 mm) on center. The vertical bar shall have a standard hook and extend to the bottom of the footing and shall have support and cover as specified in Section R403.1.3.5.3 and extend not less than 14 inches (357 mm) into the stem wall. Standard hooks shall comply with Section R608.5.4.5. Not fewer than one No. 4 horizontal bar shall be installed within 12 inches (305 mm) of the top of the stem wall and one No. 4 horizontal bar shall be located 3 to 4 inches (76 mm to 102 mm) from the bottom of the footing.

TABLE R403.1(1)
MINIMUM WIDTH AND THICKNESS FOR CONCRETE FOOTINGS FOR LIGHT-FRAME CONSTRUCTION (inches)[a, b]

SNOW LOAD OR ROOF LIVE LOAD	STORY AND TYPE OF STRUCTURE WITH LIGHT FRAME	LOAD-BEARING VALUE OF SOIL (psf)					
		1500	2000	2500	3000	3500	4000
20 psf	1 story—slab-on-grade	12 × 6	12 × 6	12 × 6	12 × 6	12 × 6	12 × 6
	1 story—with crawl space	12 × 6	12 × 6	12 × 6	12 × 6	12 × 6	12 × 6
	1 story—plus basement	18 × 6	14 × 6	12 × 6	12 × 6	12 × 6	12 × 6
	2 story—slab-on-grade	12 × 6	12 × 6	12 × 6	12 × 6	12 × 6	12 × 6
	2 story—with crawl space	16 × 6	12 × 6	12 × 6	12 × 6	12 × 6	12 × 6
	2 story—plus basement	22 × 6	16 × 6	13 × 6	12 × 6	12 × 6	12 × 6
	3 story—slab-on-grade	14 × 6	12 × 6	12 × 6	12 × 6	12 × 6	12 × 6
	3 story—with crawl space	19 × 6	14 × 6	12 × 6	12 × 6	12 × 6	12 × 6
	3 story—plus basement	25 × 8	19 × 6	15 × 6	13 × 6	12 × 6	12 × 6
30 psf	1 story—slab-on-grade	12 × 6	12 × 6	12 × 6	12 × 6	12 × 6	12 × 6
	1 story—with crawl space	13 × 6	12 × 6	12 × 6	12 × 6	12 × 6	12 × 6
	1 story—plus basement	19 × 6	14 × 6	12 × 6	12 × 6	12 × 6	12 × 6
	2 story—slab-on-grade	12 × 6	12 × 6	12 × 6	12 × 6	12 × 6	12 × 6
	2 story—with crawl space	17 × 6	13 × 6	12 × 6	12 × 6	12 × 6	12 × 6
	2 story—plus basement	23 × 6	17 × 6	14 × 6	12 × 6	12 × 6	12 × 6
	3 story—slab-on-grade	15 × 6	12 × 6	12 × 6	12 × 6	12 × 6	12 × 6
	3 story—with crawl space	20 × 6	15 × 6	12 × 6	12 × 6	12 × 6	12 × 6
	3 story—plus basement	26 × 8	20 × 6	16 × 6	13 × 6	12 × 6	12 × 6
50 psf	1 story—slab-on-grade	12 × 6	12 × 6	12 × 6	12 × 6	12 × 6	12 × 6
	1 story—with crawl space	16 × 6	12 × 6	12 × 6	12 × 6	12 × 6	12 × 6
	1 story—plus basement	21 × 6	16 × 6	13 × 6	12 × 6	12 × 6	12 × 6
	2 story—slab-on-grade	14 × 6	12 × 6	12 × 6	12 × 6	12 × 6	12 × 6
	2 story—with crawl space	19 × 6	14 × 6	12 × 6	12 × 6	12 × 6	12 × 6
	2 story—plus basement	25 × 7	19 × 6	15 × 6	12 × 6	12 × 6	12 × 6
	3 story—slab-on-grade	17 × 6	13 × 6	12 × 6	12 × 6	12 × 6	12 × 6
	3 story—with crawl space	22 × 6	17 × 6	13 × 6	12 × 6	12 × 6	12 × 6
	3 story—plus basement	28 × 9	21 × 6	17 × 6	14 × 6	12 × 6	12 × 6
70 psf	1 story—slab-on-grade	12 × 6	12 × 6	12 × 6	12 × 6	12 × 6	12 × 6
	1 story—with crawl space	18 × 6	13 × 6	12 × 6	12 × 6	12 × 6	12 × 6
	1 story—plus basement	24 × 7	18 × 6	14 × 6	12 × 6	12 × 6	12 × 6
	2 story—slab-on-grade	16 × 6	12 × 6	12 × 6	12 × 6	12 × 6	12 × 6
	2 story—with crawl space	21 × 6	16 × 6	13 × 6	12 × 6	12 × 6	12 × 6
	2 story—plus basement	27 × 9	20 × 6	16 × 6	14 × 6	12 × 6	12 × 6
	3 story—slab-on-grade	19 × 6	14 × 6	12 × 6	12 × 6	12 × 6	12 × 6
	3 story—with crawl space	25 × 7	18 × 6	15 × 6	12 × 6	12 × 6	12 × 6
	3 story—plus basement	30 × 10	23 × 6	18 × 6	15 × 6	13 × 6	12 × 6

For SI: 1 inch = 25.4 mm, 1 plf = 14.6 N/m, 1 pound per square foot = 47.9 N/m^2.

a. Interpolation allowed. Extrapolation is not allowed.

b. Based on 32-foot-wide house with load-bearing center wall that carries half of the tributary attic, and floor framing. For every 2 feet of adjustment to the width of the house, add or subtract 2 inches of footing width and 1 inch of footing thickness (but not less than 6 inches thick).

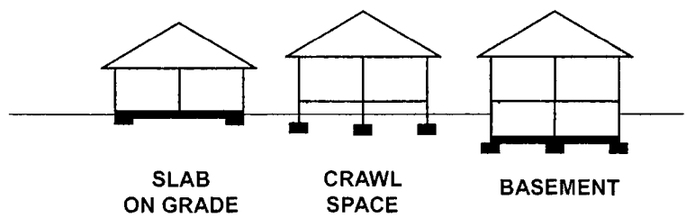

TABLE R403.1(2)
MINIMUM WIDTH AND THICKNESS FOR CONCRETE FOOTINGS FOR LIGHT-FRAME CONSTRUCTION WITH BRICK VENEER (inches)[a, b]

SNOW LOAD OR ROOF LIVE LOAD	STORY AND TYPE OF STRUCTURE WITH BRICK VENEER	LOAD-BEARING VALUE OF SOIL (psf)					
		1500	2000	2500	3000	3500	4000
20 psf	1 story—slab-on-grade	12 × 6	12 × 6	12 × 6	12 × 6	12 × 6	12 × 6
	1 story—with crawl space	15 × 6	12 × 6	12 × 6	12 × 6	12 × 6	12 × 6
	1 story—plus basement	21 × 6	15 × 6	12 × 6	12 × 6	12 × 6	12 × 6
	2 story—slab-on-grade	15 × 6	12 × 6	12 × 6	12 × 6	12 × 6	12 × 6
	2 story—with crawl space	20 × 6	15 × 6	12 × 6	12 × 6	12 × 6	12 × 6
	2 story—plus basement	26 × 8	20 × 6	16 × 6	13 × 6	12 × 6	12 × 6
	3 story—slab-on-grade	20 × 6	15 × 6	12 × 6	12 × 6	12 × 6	12 × 6
	3 story—with crawl space	26 × 8	19 × 6	15 × 6	13 × 6	12 × 6	12 × 6
	3 story—plus basement	32 × 11	24 × 7	19 × 6	16 × 6	14 × 6	12 × 6
30 psf	1 story—slab-on-grade	12 × 6	12 × 6	12 × 6	12 × 6	12 × 6	12 × 6
	1 story—with crawl space	16 × 6	12 × 6	12 × 6	12 × 6	12 × 6	12 × 6
	1 story—plus basement	22 × 6	16 × 6	13 × 6	12 × 6	12 × 6	12 × 6
	2 story—slab-on-grade	16 × 6	12 × 6	12 × 6	12 × 6	12 × 6	12 × 6
	2 story—with crawl space	22 × 6	16 × 6	13 × 6	12 × 6	12 × 6	12 × 6
	2 story—plus basement	27 × 9	21 × 6	16 × 6	14 × 6	12 × 6	12 × 6
	3 story—slab-on-grade	21 × 6	16 × 6	13 × 6	12 × 6	12 × 6	12 × 6
	3 story—with crawl space	27 × 8	20 × 6	16 × 6	13 × 6	12 × 6	12 × 6
	3 story—plus basement	33 × 11	24 × 7	20 × 6	16 × 6	14 × 6	12 × 6
50 psf	1 story—slab-on-grade	13 × 6	12 × 6	12 × 6	12 × 6	12 × 6	12 × 6
	1 story—with crawl space	18 × 6	14 × 6	12 × 6	12 × 6	12 × 6	12 × 6
	1 story—plus basement	24 × 7	18 × 6	14 × 6	12 × 6	12 × 6	12 × 6
	2 story—slab-on-grade	18 × 6	14 × 6	12 × 6	12 × 6	12 × 6	12 × 6
	2 story—with crawl space	24 × 7	18 × 6	14 × 6	12 × 6	12 × 6	12 × 6
	2 story—plus basement	29 × 10	22 × 6	18 × 6	15 × 6	13 × 6	12 × 6
	3 story—slab-on-grade	27 × 7	18 × 6	13 × 6	12 × 6	12 × 6	12 × 6
	3 story—with crawl space	29 × 9	22 × 6	17 × 6	14 × 6	12 × 6	12 × 6
	3 story—plus basement	35 × 12	26 × 8	21 × 6	17 × 6	15 × 6	13 × 6
70 psf	1 story—slab-on-grade	15 × 6	12 × 6	12 × 6	12 × 6	12 × 6	12 × 6
	1 story—with crawl space	20 × 6	15 × 6	12 × 6	12 × 6	12 × 6	12 × 6
	1 story—plus basement	26 × 8	20 × 6	16× 6	13 × 6	12 × 6	12 × 6
	2 story—slab-on grade	20 × 6	15 × 6	12 × 6	12 × 6	12 × 6	12 × 6
	2 story—with crawl space	26 × 8	19 × 6	15× 6	13 × 6	12 × 6	12 × 6
	2 story—plus basement	32 × 11	24 × 7	19 × 6	16 × 6	14 × 6	12 × 6
	3 story—slab-on-grade	26 × 8	19 × 6	15 × 6	13 × 6	12 × 6	12 × 6
	3 story—with crawl space	31 × 11	23 × 7	19 × 6	16 × 6	13 × 6	12 × 6
	3 story—plus basement	37 × 13	28 × 9	22 × 6	18 × 6	16 × 6	14 × 6

For SI: 1 inch = 25.4 mm, 1 plf = 14.6 N/m, 1 pound per square foot = 47.9 N/m^2.

a. Interpolation allowed. Extrapolation is not allowed.

b. Based on 32-foot-wide house with load-bearing center wall that carries half of the tributary attic, and floor framing. For every 2 feet of adjustment to the width of the house, add or subtract 2 inches of footing width and 1 inch of footing thickness (but not less than 6 inches thick).

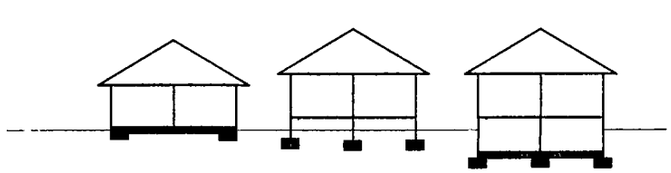

SLAB ON GRADE | CRAWL SPACE | BASEMENT

TABLE R403.1(3)
MINIMUM WIDTH AND THICKNESS FOR CONCRETE FOOTINGS WITH CAST-IN-PLACE CONCRETE OR FULLY GROUTED MASONRY WALL CONSTRUCTION (inches)[a, b]

SNOW LOAD OR ROOF LIVE LOAD	STORY AND TYPE OF STRUCTURE WITH CMU	LOAD-BEARING VALUE OF SOIL (psf)					
		1500	2000	2500	3000	3500	4000
20 psf	1 story—slab-on-grade	14 × 6	12 × 6	12 × 6	12 × 6	12 × 6	12 × 6
	1 story—with crawl space	19 × 6	14 × 6	12 × 6	12 × 6	12 × 6	12 × 6
	1 story—plus basement	25 × 8	19 × 6	15 × 6	13 × 6	12 × 6	12 × 6
	2 story—slab-on-grade	23 × 7	18 × 6	14 × 6	12 × 6	12 × 6	12 × 6
	2 story—with crawl space	29 × 9	22 × 6	17 × 6	14 × 6	12 × 6	12 × 6
	2 story—plus basement	35 × 12	26 × 8	21 × 6	17 × 6	15 × 6	13 × 6
	3 story—slab-on-grade	32× 11	24 × 7	19 × 6	16 × 6	14 × 6	12 × 6
	3 story—with crawl space	38 × 14	28 × 9	23 × 6	19 × 6	16 × 6	14 × 6
	3 story—plus basement	43 × 17	33 × 11	26 × 8	22 × 6	19 × 6	16 × 6
30 psf	1 story—slab-on-grade	15 × 6	12 × 6	12 × 6	12 × 6	12 × 6	12 × 6
	1 story—with crawl space	20 × 6	15 × 6	12 × 6	12 × 6	12 × 6	12 × 6
	1 story—plus basement	26 × 8	20 × 6	16 × 6	13 × 6	12 × 6	12 × 6
	2 story—slab-on-grade	24 × 7	18 × 6	15 × 6	12 × 6	12 × 6	12 × 6
	2 story—with crawl space	30 × 10	22 × 6	18 × 6	15 × 6	13 × 6	12 × 6
	2 story—plus basement	36 × 13	27 × 8	21 × 6	18 × 6	15 × 6	13 × 6
	3 story—slab-on-grade	33 × 12	25 × 7	20 × 6	17 × 6	14 × 6	12 × 6
	3 story—with crawl space	39 × 14	29 × 9	23 × 7	19 × 6	17 × 6	14 × 6
	3 story—plus basement	44 × 17	33 × 12	27× 8	22 × 6	19 × 6	17 × 6
50 psf	1 story—slab-on-grade	17 × 6	13 × 6	12 × 6	12 × 6	12 × 6	12 × 6
	1 story—with crawl space	22 × 6	17 × 6	13 × 6	12 × 6	12 × 6	12 × 6
	1 story—plus basement	28× 9	21 × 6	17 × 6	14 × 6	12 × 6	12 × 6
	2 story—slab-on-grade	27 × 8	20 × 6	16 × 6	13 × 6	12 × 6	12 × 6
	2 story—with crawl space	32 × 11	24 × 7	19 × 6	16 × 6	14 × 6	12 × 6
	2 story—plus basement	38 × 14	28 × 9	23 × 6	19 × 6	16 × 6	14 × 6
	3 story—slab-on-grade	35 × 13	27 × 8	21 × 6	18 × 6	15 × 6	13 × 6
	3 story—with crawl space	41 × 15	31 × 10	24 × 7	20 × 6	17 × 6	15 × 6
	3 story—plus basement	47 × 18	35 × 12	28 × 9	23 × 7	20 × 6	17 × 6
70 psf	1 story—slab-on-grade	19 × 6	14 × 6	12 × 6	12 × 6	12 × 6	12 × 6
	1 story—with crawl space	25 × 7	18 × 6	15 × 6	12 × 6	12 × 6	12 × 6
	1 story—plus basement	30 × 10	23 × 6	18 × 6	15 × 6	13 × 6	12 × 6
	2 story—slab-on-grade	29 × 9	22 × 6	17 × 6	14 × 6	12 × 6	12 × 6
	2 story—with crawl space	34 × 12	26 × 8	21 × 6	17 × 6	15 × 6	13 × 6
	2 story—plus basement	40 × 15	30 × 10	24 × 7	20 × 6	17 × 6	15 × 6
	3 story—slab-on-grade	38 × 14	28 × 9	23 × 6	19 × 6	16 × 6	14 × 6
	3 story—with crawl space	43 × 16	32 × 11	26 × 8	21 × 6	18 × 6	16 × 6
	3 story—plus basement	49 × 19	37 × 13	29 × 10	24 × 7	21 × 6	18 × 6

For SI: 1 inch = 25.4 mm, 1 plf = 14.6 N/m, 1 pound per square foot = 47.9 N/m^2.

a. Interpolation allowed. Extrapolation is not allowed.

b. Based on 32-foot-wide house with load-bearing center wall that carries half of the tributary attic, and floor framing. For every 2 feet of adjustment to the width of the house add or subtract 2 inches of footing width and 1 inch of footing thickness (but not less than 6 inches thick).

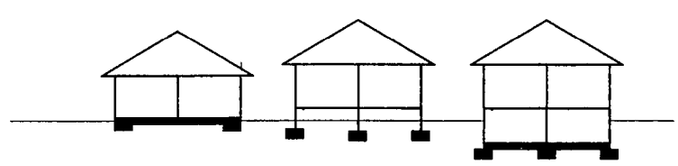

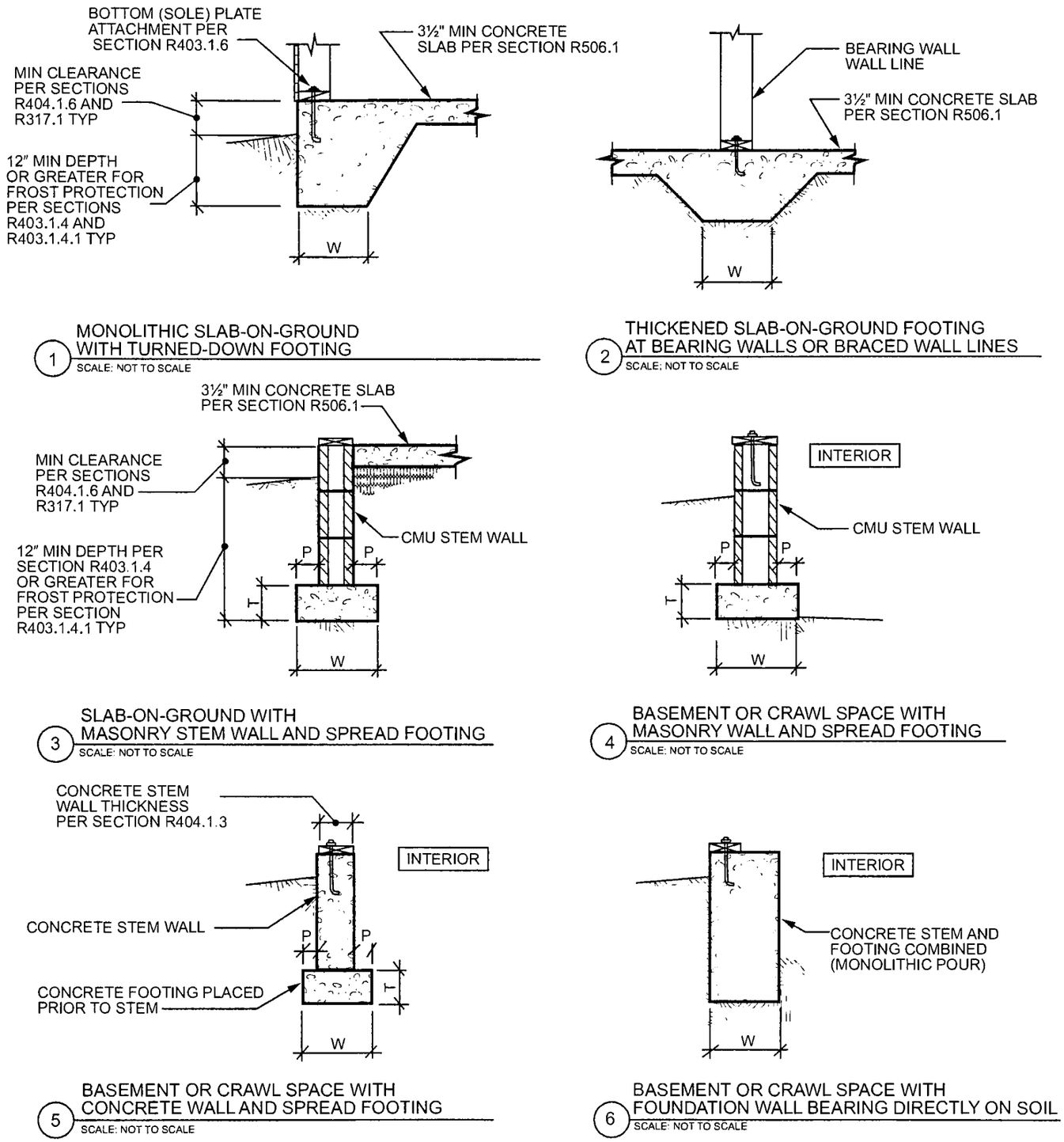

For SI: 1 inch = 25.4 mm.

W = Width of footing, T = Thickness of footing and P = Projection per Section R403.1.1

NOTES:

a. See Section R404.3 for sill requirements.
b. See Section R403.1.6 for sill attachment.
c. See Section R506.2.3 for vapor barrier requirements.
d. See Section R403.1 for base.
e. See Figure R403.1.3 for additional footing requirements for structures in SDC D_0, D_1 and D_2 and townhouses in SDC C.
f. See Section R408 for under-floor ventilation and access requirements.

FIGURE R403.1(1)
PLAIN CONCRETE FOOTINGS WITH MASONRY AND CONCRETE STEM WALLS IN SDC A, B AND C[a, b, c, d, e, f]

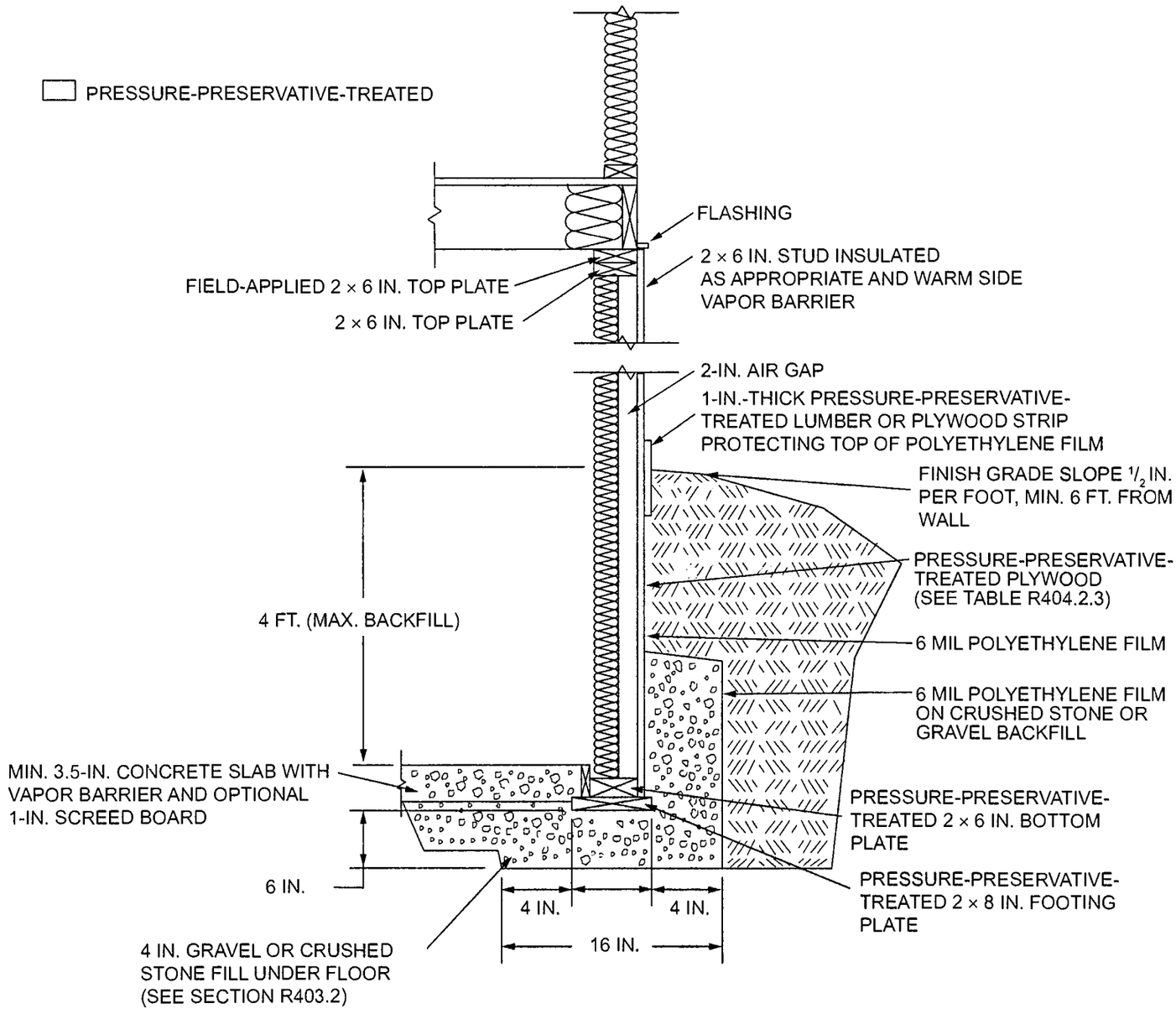

For SI: 1 inch = 25.4 mm, 1 foot = 304.8 mm, 1 mil = 0.0254.

FIGURE R403.1(2)
PERMANENT WOOD FOUNDATION BASEMENT WALL SECTION

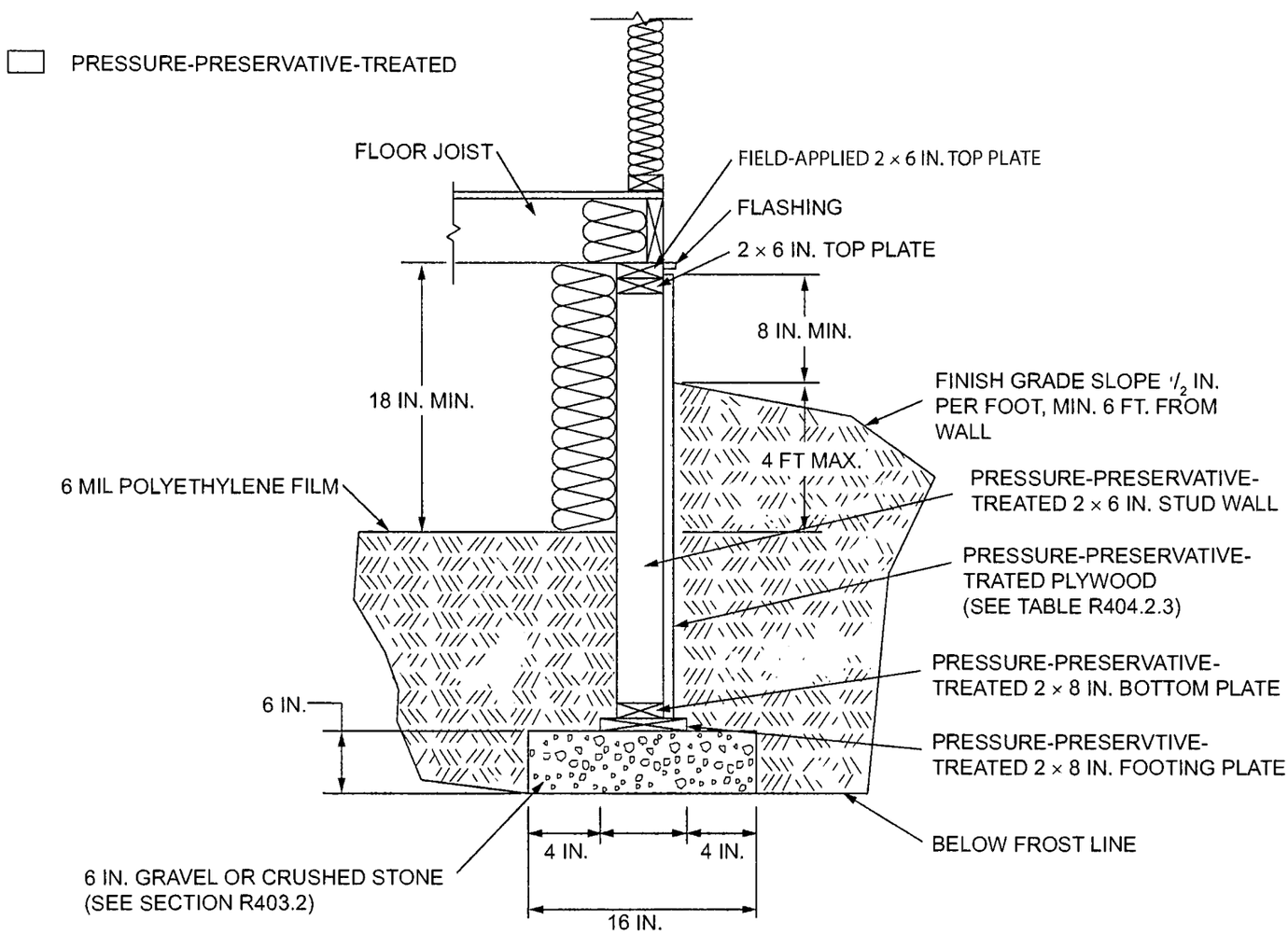

For SI: 1 inch = 25.4 mm, 1 foot = 304.8 mm, 1 mil = 0.0254 mm.

FIGURE R403.1(3)
PERMANENT WOOD FOUNDATION CRAWL SPACE SECTION

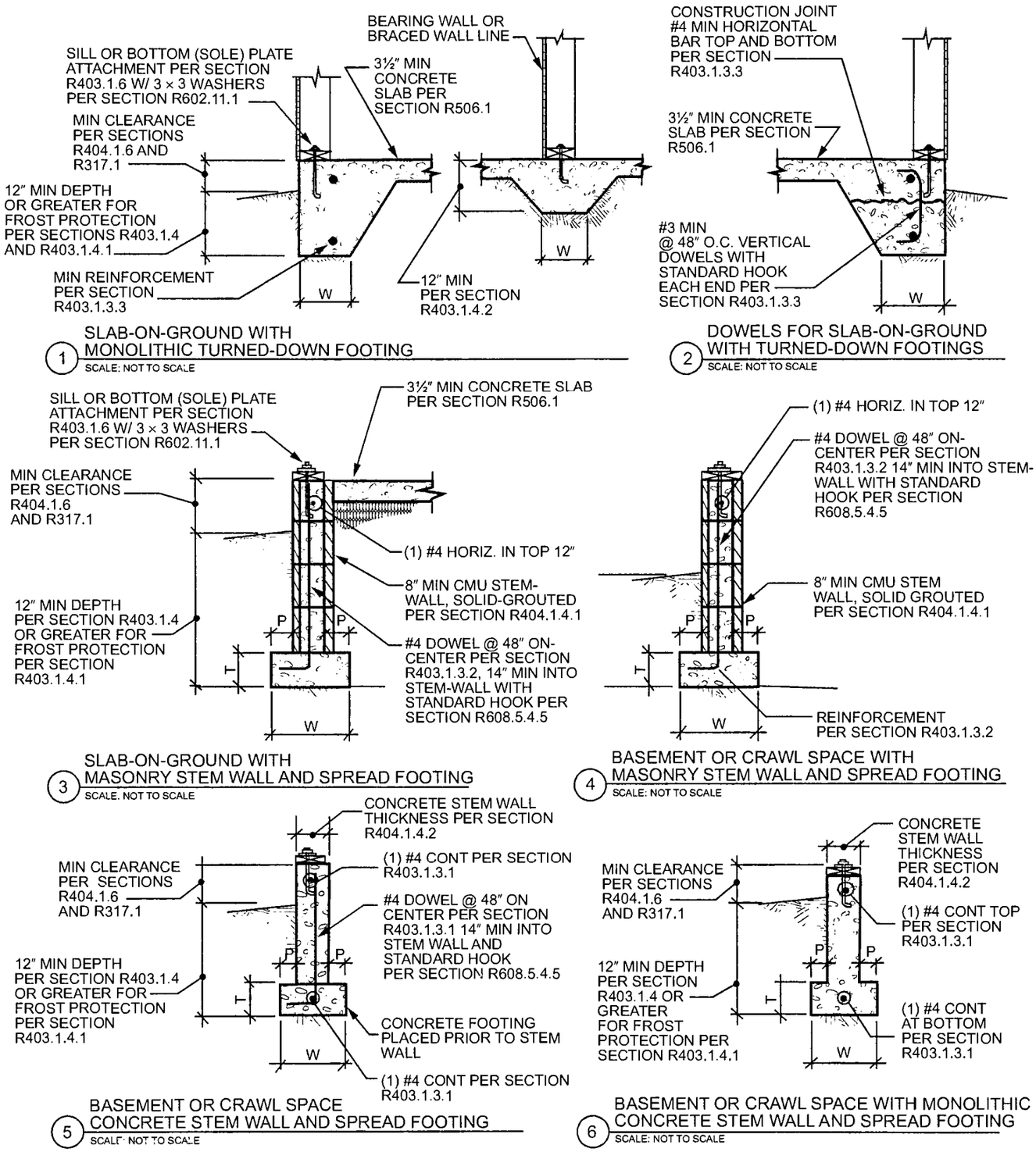

W = Width of footing, T = Thickness of footing and P = Projection per Section R403.1.1

NOTES:

a. See Section R404.3 for sill requirements.
b. See Section R403.1.6 for sill attachment.
c. See Section R506.2.3 for vapor barrier requirements.
d. See Section R403.1 for base.
e. See Section R408 for under-floor ventilation and access requirements.
f. See Section R403.1.3.5 for reinforcement requirements.

FIGURE R403.1.3
REINFORCED CONCRETE FOOTINGS AND MASONRY AND CONCRETE STEM WALLS IN SDC D_0, D_1 AND D_2[a, b, c, d, e, f]

R403.1.3.2 Masonry stem walls with concrete footings. In Seismic Design Categories D_0, D_1 and D_2 where a masonry stem wall is supported on a concrete footing, not fewer than one No. 4 vertical bar shall be installed at not more than 4 feet (1219 mm) on center. The vertical bar shall have a standard hook and extend to the bottom of the footing and shall have support and cover as specified in Section R403.1.3.5.3 and extend not less than 14 inches (357 mm) into the stem wall. Standard hooks shall comply with Section R608.5.4.5. Not fewer than one No. 4 horizontal bar shall be installed within 12 inches (305 mm) of the top of the wall and one No. 4 horizontal bar shall be located 3 to 4 inches (76 mm to 102 mm) from the bottom of the footing. Masonry stem walls shall be solid grouted.

R403.1.3.3 Slabs-on-ground with turned-down footings. In Seismic Design Categories D_0, D_1 and D_2, slabs-on-ground cast monolithically with turned-down footings shall have not fewer than one No. 4 bar at the top and the bottom of the footing or one No. 5 bar or two No. 4 bars in the middle third of the footing depth.

Where the slab is not cast monolithically with the footing, No. 3 or larger vertical dowels with standard hooks on each end shall be installed at not more than 4 feet (1219 mm) on center in accordance with Figure R403.1.3, Detail 2. Standard hooks shall comply with Section R608.5.4.5.

R403.1.3.4 Interior bearing and braced wall panel footings in Seismic Design Categories D_0, D_1 and D_2. In Seismic Design Categories D_0, D_1 and D_2, interior footings supporting bearing walls or braced wall panels, and cast monolithically with a slab on grade, shall extend to a depth of not less than 12 inches (305 mm) below the top of the slab.

R403.1.3.5 Reinforcement. Footing and stem wall reinforcement shall comply with Sections R403.1.3.5.1 through R403.1.3.5.4.

R403.1.3.5.1 Steel reinforcement. Steel reinforcement shall comply with the requirements of ASTM A615, A706 or A996. ASTM A996 bars produced from rail steel shall be Type R. The minimum yield strength of reinforcing steel shall be 40,000 psi (Grade 40) (276 MPa).

R403.1.3.5.2 Location of reinforcement in wall. The center of vertical reinforcement in stem walls shall be located at the centerline of the wall. Horizontal and vertical reinforcement shall be located in footings and stem walls to provide the minimum cover required by Section R403.1.3.5.3.

R403.1.3.5.3 Support and cover. Reinforcement shall be secured in the proper location in the forms with tie wire or other bar support system to prevent displacement during the concrete placement operation. Steel reinforcement in concrete cast against the earth shall have a minimum cover of 3 inches (75 mm). Minimum cover for reinforcement in concrete cast in removable forms that will be exposed to the earth or weather shall be $1^1/_2$ inches (38 mm) for No. 5 bars and smaller, and 2 inches (50 mm) for No. 6 bars and larger. For concrete cast in removable forms that will not be exposed to the earth or weather, and for concrete cast in stay-in-place forms, minimum cover shall be $^3/_4$ inch (19 mm).

R403.1.3.5.4 Lap splices. Vertical and horizontal reinforcement shall be the longest lengths practical. Where splices are necessary in reinforcement, the length of lap splice shall be in accordance with Table R608.5.4.(1) and Figure R608.5.4(1). The maximum gap between noncontact parallel bars at a lap splice shall not exceed the smaller of one-fifth the required lap length and 6 inches (152 mm) [see Figure R608.5.4(1)].

R403.1.3.6 Isolated concrete footings. In detached one- and two-family dwellings that are three stories or less in height and constructed with stud bearing walls, isolated plain concrete footings supporting columns or pedestals are permitted.

R403.1.4 Minimum depth. Exterior footings shall be placed not less than 12 inches (305 mm) below the undisturbed ground surface. Where applicable, the depth of footings shall also conform to Sections R403.1.4.1 through R403.1.4.2.

R403.1.4.1 Frost protection. Except where otherwise protected from frost, foundation walls, piers and other permanent supports of buildings and structures shall be protected from frost by one or more of the following methods:

1. Extended below the frost line specified in Table R301.2.(1).
2. Constructed in accordance with Section R403.3.
3. Constructed in accordance with ASCE 32.
4. Erected on solid rock.

Footings shall not bear on frozen soil unless the frozen condition is permanent.

Exceptions:

1. Protection of free-standing accessory structures with an area of 600 square feet (56 m^2) or less, of light-frame construction, with an eave height of 10 feet (3048 mm) or less shall not be required.
2. Protection of free-standing accessory structures with an area of 400 square feet (37 m^2) or less, of other than light-frame construction, with an eave height of 10 feet (3048 mm) or less shall not be required.
3. Decks not supported by a dwelling need not be provided with footings that extend below the frost line.

R403.1.5 Slope. The top surface of footings shall be level. The bottom surface of footings shall not have a slope exceeding one unit vertical in 10 units horizontal (10-percent slope). Footings shall be stepped where it is necessary to change the elevation of the top surface of the footings or

where the slope of the bottom surface of the footings will exceed one unit vertical in 10 units horizontal (10-percent slope).

R403.1.6 Foundation anchorage. Wood sill plates and wood walls supported directly on continuous foundations shall be anchored to the foundation in accordance with this section.

Cold-formed steel framing shall be anchored directly to the foundation or fastened to wood sill plates in accordance with Section R505.3.1 or R603.3.1, as applicable. Wood sill plates supporting cold-formed steel framing shall be anchored to the foundation in accordance with this section.

Wood sole plates at all exterior walls on monolithic slabs, wood sole plates of braced wall panels at building interiors on monolithic slabs and all wood sill plates shall be anchored to the foundation with minimum $^1/_2$-inch-diameter (12.7 mm) anchor bolts spaced not greater than 6 feet (1829 mm) on center or approved anchors or anchor straps spaced as required to provide equivalent anchorage to $^1/_2$-inch-diameter (12.7 mm) anchor bolts. Bolts shall extend not less than 7 inches (178 mm) into concrete or grouted cells of concrete masonry units. The bolts shall be located in the middle third of the width of the plate. A nut and washer shall be tightened on each anchor bolt. There shall be not fewer than two bolts per plate section with one bolt located not more than 12 inches (305 mm) or less than seven bolt diameters from each end of the plate section. Interior bearing wall sole plates on monolithic slab foundation that are not part of a braced wall panel shall be positively anchored with approved fasteners. Sill plates and sole plates shall be protected against decay and termites where required by Sections R317 and R318.

Exceptions:

1. Walls 24 inches (610 mm) total length or shorter connecting offset braced wall panels shall be anchored to the foundation with not fewer than one anchor bolt located in the center third of the plate section and shall be attached to adjacent braced wall panels at corners as shown in Item 9 of Table R602.3(1).
2. Connection of walls 12 inches (305 mm) total length or shorter connecting offset braced wall panels to the foundation without anchor bolts shall be permitted. The wall shall be attached to adjacent braced wall panels at corners as shown in Item 9 of Table R602.3(1).

R403.1.6.1 Foundation anchorage in Seismic Design Categories C, D_0, D_1 and D_2. In addition to the requirements of Section R403.1.6, the following requirements shall apply to wood light-frame structures in Seismic Design Categories D_0, D_1 and D_2 and wood light-frame townhouses in Seismic Design Category C.

1. Plate washers conforming to Section R602.11.1 shall be provided for all anchor bolts over the full length of required braced wall lines except where approved anchor straps are used. Properly sized cut washers shall be permitted for anchor bolts in wall lines not containing braced wall panels.
2. Interior braced wall plates shall have anchor bolts spaced at not more than 6 feet (1829 mm) on center and located within 12 inches (305 mm) of the ends of each plate section where supported on a continuous foundation.
3. Interior bearing wall sole plates shall have anchor bolts spaced at not more than 6 feet (1829 mm) on center and located within 12 inches (305 mm) of the ends of each plate section where supported on a continuous foundation.
4. The maximum anchor bolt spacing shall be 4 feet (1219 mm) for buildings over two stories in height.
5. Stepped cripple walls shall conform to Section R602.11.2.
6. Where continuous wood foundations in accordance with Section R404.2 are used, the force transfer shall have a capacity equal to or greater than the connections required by Section R602.11.1 or the braced wall panel shall be connected to the wood foundations in accordance with the braced wall panel-to-floor fastening requirements of Table R602.3(1).

R403.1.7 Footings on or adjacent to slopes. The placement of buildings and structures on or adjacent to slopes steeper than one unit vertical in three units horizontal (33.3-percent slope) shall conform to Sections R403.1.7.1 through R403.1.7.4.

R403.1.7.1 Building clearances from ascending slopes. In general, buildings below slopes shall be set a sufficient distance from the slope to provide protection from slope drainage, erosion and shallow failures. Except as provided in Section R403.1.7.4 and Figure R403.1.7.1, the following criteria will be assumed to provide this protection. Where the existing slope is steeper than one unit vertical in one unit horizontal (100-percent slope), the toe of the slope shall be assumed to be at the intersection of a horizontal plane drawn from the top of the foundation and a plane drawn tangent to the slope at an angle of 45 degrees (0.79 rad) to the horizontal. Where a retaining wall is constructed at the toe of the slope, the height of the slope shall be measured from the top of the wall to the top of the slope.

R403.1.7.2 Footing setback from descending slope surfaces. Footings on or adjacent to slope surfaces shall be founded in material with an embedment and setback from the slope surface sufficient to provide vertical and lateral support for the footing without detrimental settlement. Except as provided for in Section R403.1.7.4 and Figure R403.1.7.1, the following setback is deemed adequate to meet the criteria. Where the slope is steeper than one unit vertical in one unit horizontal (100-percent slope), the required setback shall be measured from an imaginary plane 45 degrees (0.79 rad) to the horizontal, projected upward from the toe of the slope.

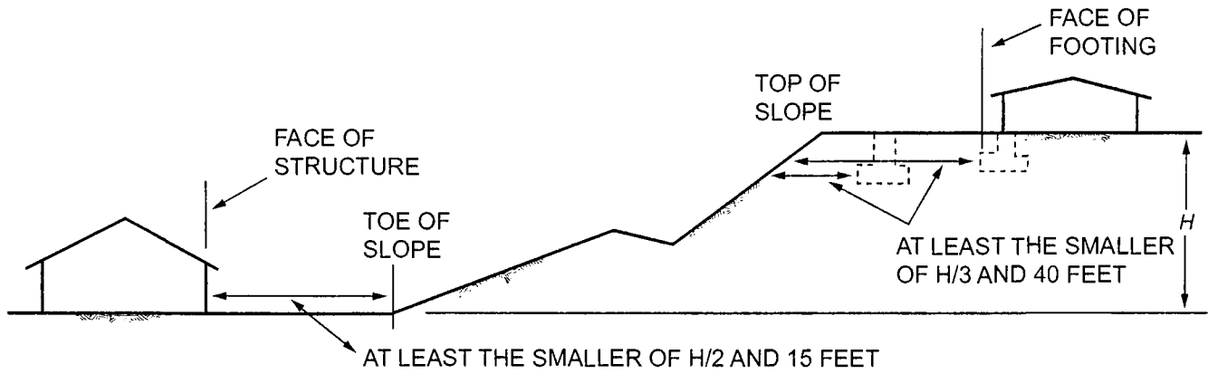

For SI: 1 foot = 304.8 mm.

FIGURE R403.1.7.1
FOUNDATION CLEARANCE FROM SLOPES

R403.1.7.3 Foundation elevation. On graded sites, the top of any exterior foundation shall extend above the elevation of the street gutter at point of discharge or the inlet of an approved drainage device not less than 12 inches (305 mm) plus 2 percent. Alternate elevations are permitted subject to the approval of the building official, provided that it can be demonstrated that required drainage to the point of discharge and away from the structure is provided at all locations on the site.

R403.1.7.4 Alternate setbacks and clearances. Alternate setbacks and clearances are permitted, subject to the approval of the building official. The building official is permitted to require an investigation and recommendation of a qualified engineer to demonstrate that the intent of this section has been satisfied. Such an investigation shall include consideration of material, height of slope, slope gradient, load intensity and erosion characteristics of slope material.

R403.1.8 Foundations on expansive soils. Foundation and floor slabs for buildings located on expansive soils shall be designed in accordance with Section 1808.6 of the *California Building Code*.

Exception: Slab-on-ground and other foundation systems that have performed adequately in soil conditions similar to those encountered at the building site are permitted subject to the approval of the building official.

R403.1.8.1 Expansive soils classifications. Soils meeting all of the following provisions shall be considered to be expansive, except that tests to show compliance with Items 1, 2 and 3 shall not be required if the test prescribed in Item 4 is conducted:

1. Plasticity Index (PI) of 15 or greater, determined in accordance with ASTM D4318.
2. More than 10 percent of the soil particles pass a No. 200 sieve (75 μm), determined in accordance with ASTM D422.
3. More than 10 percent of the soil particles are less than 5 micrometers in size, determined in accordance with ASTM D422.
4. Expansion Index greater than 20, determined in accordance with ASTM D4829.

R403.2 Footings for wood foundations. Footings for wood foundations shall be in accordance with Figures R403.1(2) and R403.1(3). Gravel shall be washed and well graded. The maximum size stone shall not exceed $^3/_4$ inch (19.1 mm). Gravel shall be free from organic, clayey or silty soils. Sand shall be coarse, not smaller than $^1/_{16}$-inch (1.6 mm) grains and shall be free from organic, clayey or silty soils. Crushed stone shall have a maximum size of $^1/_2$ inch (12.7 mm).

R403.3 Frost-protected shallow foundations. For buildings where the monthly mean temperature of the building is maintained at not less than 64°F (18°C), footings are not required to extend below the frost line where protected from frost by insulation in accordance with Figure R403.3(1) and Table R403.3(1). Foundations protected from frost in accordance with Figure R403.3(1) and Table R403.3(1) shall not be used for unheated spaces such as porches, utility rooms, garages and carports, and shall not be attached to basements or crawl spaces that are not maintained at a minimum monthly mean temperature of 64°F (18°C).

Materials used below grade for the purpose of insulating footings against frost shall be labeled as complying with ASTM C578.

R403.3.1 Foundations adjoining frost-protected shallow foundations. Foundations that adjoin frost-protected shallow foundations shall be protected from frost in accordance with Section R403.1.4.

R403.3.1.1 Attachment to unheated slab-on-ground structure. Vertical wall insulation and horizontal insulation of frost-protected shallow foundations that adjoin a slab-on-ground foundation that does not have a monthly mean temperature maintained at not less than 64°F (18°C) shall be in accordance with Figure R403.3(3) and Table R403.3(1). Vertical wall insulation shall extend between the frost-protected shallow foundation and the adjoining slab foundation. Required horizontal insulation shall be continuous under the adjoining slab foundation and through any foundation walls adjoining the frost- protected shallow foundation. Where insulation passes through a foundation wall, it shall be either of a type complying with this section and having bearing capacity equal to or greater than the structural loads imposed by the building, or the building shall be designed and constructed using beams, lintels, cantilevers or other means of transferring building loads such that the structural loads of the building do not bear on the insulation.

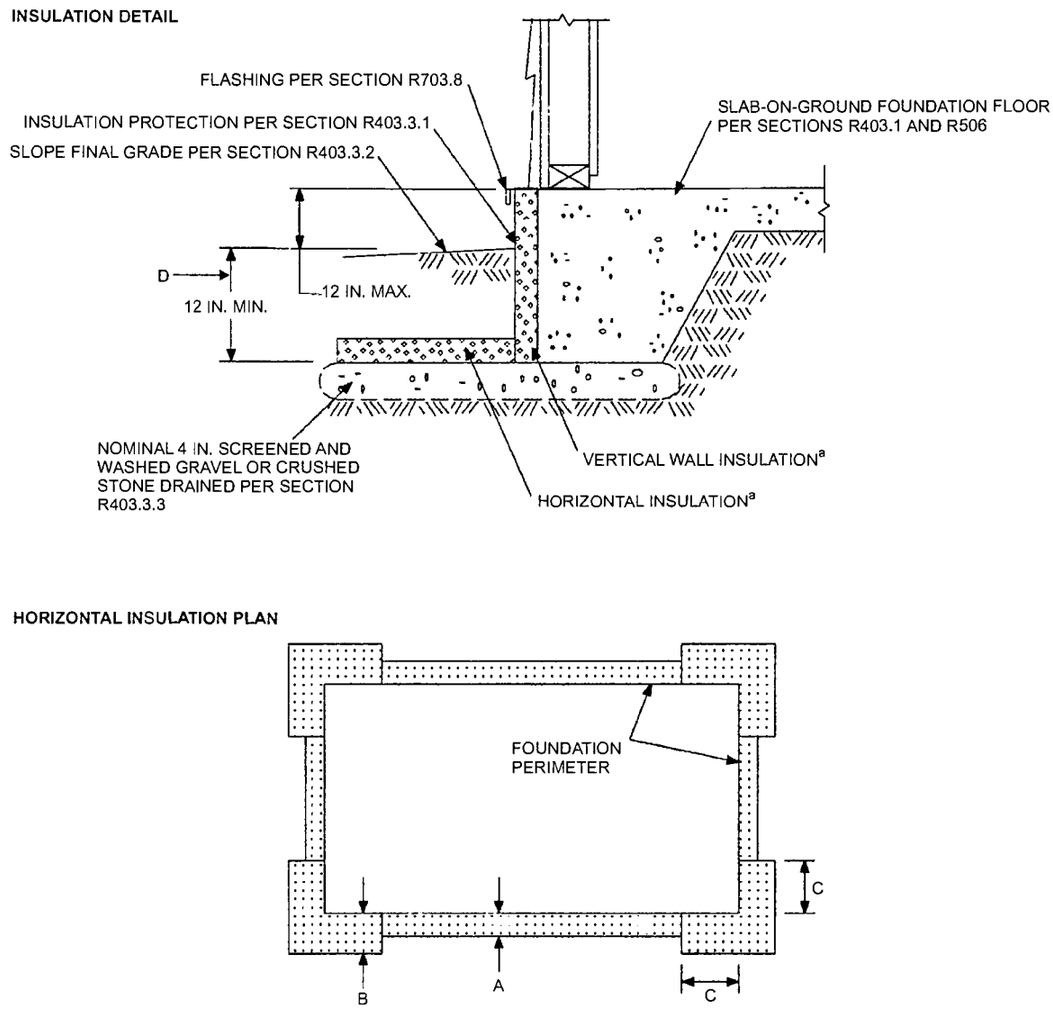

For SI: 1 inch = 25.4 mm.

a. See Table R403.3(1) for required dimensions and *R*-values for vertical and horizontal insulation and minimum footing depth.

FIGURE R403.3(1)
INSULATION PLACEMENT FOR FROST-PROTECTED FOOTINGS IN HEATED BUILDINGS

TABLE R403.3(1)
MINIMUM FOOTING DEPTH AND INSULATION REQUIREMENTS FOR FROST-PROTECTED FOOTINGS IN HEATED BUILDINGS[a]

AIR FREEZING INDEX (°F-days)[b]	MINIMUM FOOTING DEPTH, D (Inches)	VERTICAL INSULATION R-VALUE[c, d]	HORIZONTAL INSULATION R-VALUE[c, e]		HORIZONTAL INSULATION DIMENSIONS PER FIGURE R403.3(1) (Inches)		
			Along walls	At corners	A	B	C
1,500 or less	12	4.5	Not required	Not required	Not required	Not required	Not required
2,000	14	5.6	Not required	Not required	Not required	Not required	Not required
2,500	16	6.7	1.7	4.9	12	24	40
3,000	16	7.8	6.5	8.6	12	24	40
3,500	16	9.0	8.0	11.2	24	30	60
4,000	16	10.1	10.5	13.1	24	36	60

For SI: 1 inch = 25.4 mm, °C = [(°F) - 32]/1.8.

a. Insulation requirements are for protection against frost damage in heated buildings. Greater values could be required to meet energy conservation standards.

b. See Figure R403.3(2) or Table R403.3(2) for Air Freezing Index values.

c. Insulation materials shall provide the stated minimum *R*-values under long-term exposure to moist, below-ground conditions in freezing climates. The following *R*-values shall be used to determine insulation thicknesses required for this application: Type II expanded polystyrene (EPS)-3.2 R per inch for vertical insulation and 2.6 R per inch for horizontal insulation; Type IX expanded polystyrene (EPS)-3.4 R per inch for vertical insulation and 2.8 R per inch for horizontal insulation; Types IV, V, VI, VII, and X extruded polystyrene (XPS)-4.5 R per inch for vertical insulation and 4.0 R per inch for horizontal insulation.

d. Vertical insulation shall be expanded polystyrene insulation or extruded polystyrene insulation.

e. Horizontal insulation shall be expanded polystyrene insulation or extruded polystyrene insulation.

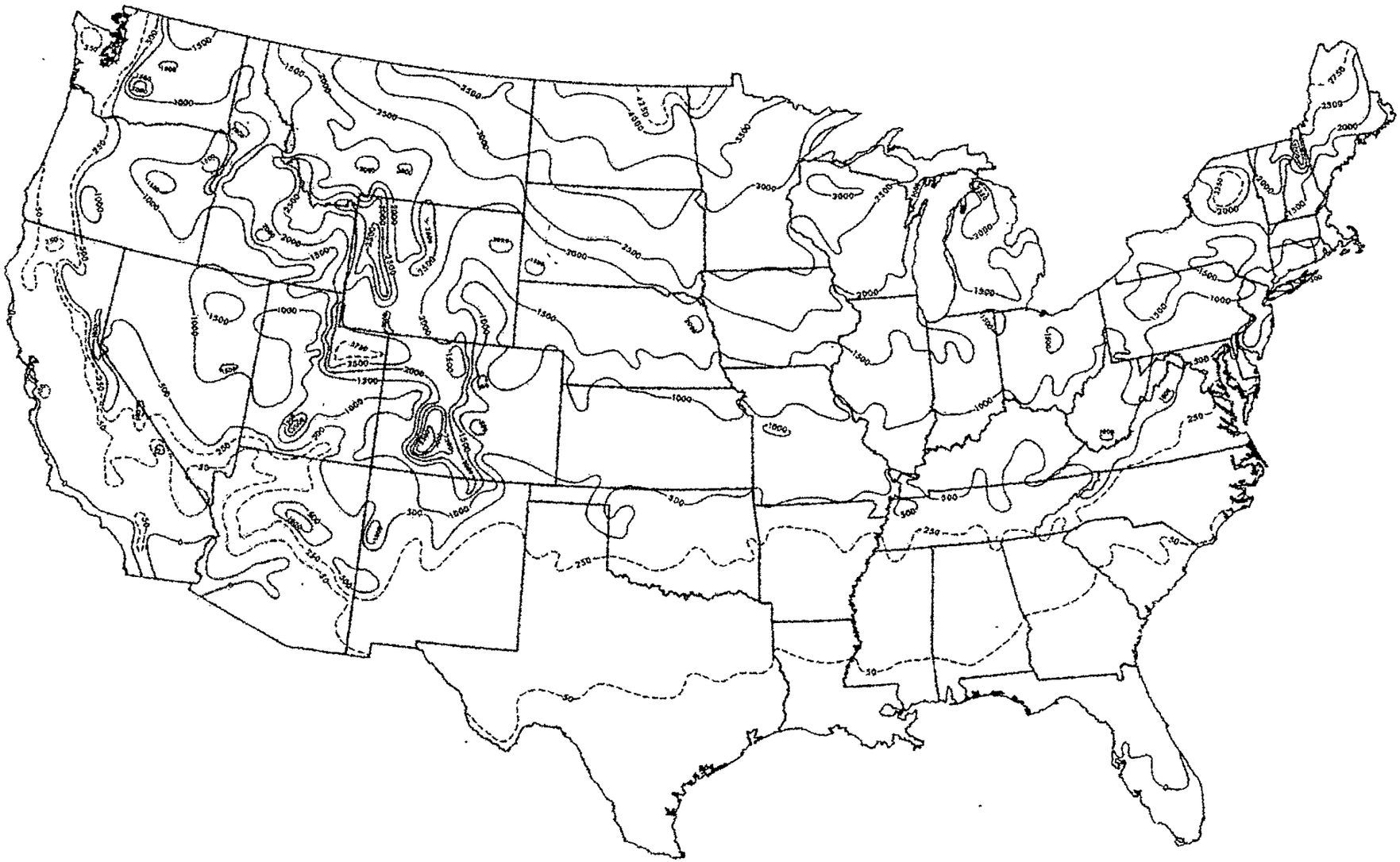

For SI: °C = [(°F) -32]/1.8.

Note: The air-freezing index is defined as cumulative degree days below 32°F. It is used as a measure of the combined magnitude and duration of air temperature below freezing. The index was computed over a 12-month period (July-June) for each of the 3,044 stations used in the above analysis. Dates from the 1951-80 period were fitted to a Weibull probability distribution to produce an estimate of the 100-year return period.

FIGURE R403.3(2)
AIR-FREEZING INDEX AN ESTIMATE OF THE 100-YEAR RETURN PERIOD

TABLE R403.3(2)
AIR-FREEZING INDEX FOR U.S. LOCATIONS BY COUNTY

STATE	AIR-FREEZING INDEX					
	1500 or less	2000	2500	3000	3500	4000
Alabama	All counties	—	—	—	—	—
Alaska	Ketchikan Gateway, Prince of Wales-Outer Ketchikan (CA), Sitka, Wrangell-Petersburg (CA)	—	Aleutians West (CA), Haines, Juneau, Skagway-Hoonah-Angoon (CA), Yakutat	—	—	All counties not listed
Arizona	All counties	—	—	—	—	—
Arkansas	All counties	—	—	—	—	—
California	All counties not listed	Nevada, Sierra	—	—	—	—
Colorado	All counties not listed	Archuleta, Custer, Fremont, Huerfano, Las Animas, Ouray, Pitkin, San Miguel	Clear Creek, Conejos, Costilla, Dolores, Eagle, La Plata, Park, Routt, San Juan, Summit	Alamosa, Grand, Jackson, Larimer, Moffat, Rio Blanco, Rio Grande	Chaffee, Gunnison, Lake, Saguache	Hinsdale, Mineral
Connecticut	All counties not listed	Hartford, Litchfield	—	—	—	—
Delaware	All counties	—	—	—	—	—
District of Columbia	All counties	—	—	—	—	—
Florida	All counties	—	—	—	—	—
Georgia	All counties	—	—	—	—	—
Hawaii	All counties	—	—	—	—	—
Idaho	All counties not listed	Adams, Bannock, Blaine, Clearwater, Idaho, Lincoln, Oneida, Power, Valley, Washington	Bingham, Bonneville, Camas, Caribou, Elmore, Franklin, Jefferson, Madison, Teton	Bear Lake, Butte, Custer, Fremont, Lemhi	Clark	—
Illinois	All counties not listed	Boone, Bureau, Cook, Dekalb, DuPage, Fulton, Grundy, Henderson, Henry, Iroquois, Jo Daviess, Kane, Kankakee, Kendall, Knox, La Salle, Lake, Lee, Livingston, Marshall, Mason, McHenry, McLean, Mercer, Peoria, Putnam, Rock Island, Stark, Tazewell, Warren, Whiteside, Will, Woodford	Carroll, Ogle, Stephenson, Winnebago	—	—	—
Indiana	All counties not listed	Allen, Benton, Cass, Fountain, Fulton, Howard, Jasper, Kosciusko, La Porte, Lake, Marshall, Miami, Newton, Porter, Pulaski, Starke, Steuben, Tippecanoe, Tipton, Wabash, Warren, White	—	—	—	—

(continued)

TABLE R403.3(2)—continued
AIR-FREEZING INDEX FOR U.S. LOCATIONS BY COUNTY

STATE	AIR-FREEZING INDEX					
	1500 or less	2000	2500	3000	3500	4000
Iowa	Appanoose, Davis, Fremont, Lee, Van Buren	All counties not listed	Allamakee, Black Hawk, Boone, Bremer, Buchanan, Buena Vista, Butler, Calhoun, Cerro Gordo, Cherokee, Chickasaw, Clay, Clayton, Delaware, Dubuque, Fayette, Floyd, Franklin, Grundy, Hamilton, Hancock, Hardin, Humboldt, Ida, Jackson, Jasper, Jones, Linn, Marshall, Palo Alto, Plymouth, Pocahontas, Powesh-iek, Sac, Sioux, Story, Tama, Webster, Winnebago, Woodbury, Worth, Wright	Dickinson, Emmet, Howard, Kossuth, Lyon, Mitchell, O'Brien, Osceola, Winneshiek	—	—
Kansas	All counties	—	—	—	—	—
Kentucky	All counties	—	—	—	—	—
Louisiana	All counties	—	—	—	—	—
Maine	York	Knox, Lincoln, Sagadahoc	Androscoggin, Cumberland, Hancock, Kennebec, Waldo, Washington	Aroostook, Franklin, Oxford, Penobscot, Piscataquis, Somerset	—	—
Maryland	All counties	—	—	—	—	—
Massachusetts	All counties not listed	Berkshire, Franklin, Hampden, Worcester	—	—	—	—
Michigan	Berrien, Branch, Cass, Kalamazoo, Macomb, Ottawa, St. Clair, St. Joseph	All counties not listed	Alger, Charlevoix, Cheboygan, Chippewa, Crawford, Delta, Emmet, Iosco, Kalkaska, Lake, Luce, Mackinac, Menominee, Missaukee, Montmorency, Ogemaw, Osceola, Otsego, Roscommon, Schoolcraft, Wexford	Baraga, Dickinson, Iron, Keweenaw, Marquette	Gogebic, Houghton, Ontonagon	—
Minnesota	—	—	Houston, Winona	All counties not listed	Aitkin, Big Stone, Carlton, Crow Wing, Douglas, Itasca, Kanabec, Lake, Morrison, Pine, Pope, Stearns, Stevens, Swift, Todd, Wadena	Becker, Beltrami, Cass, Clay, Clearwater, Grant, Hubbard, Kittson, Koochiching, Lake of the Woods, Mahnomen, Marshall, Norman, Otter Tail, Pennington, Polk, Red Lake, Roseau, St. Louis, Traverse, Wilkin

(continued)

TABLE R403.3(2)—continued
AIR-FREEZING INDEX FOR U.S. LOCATIONS BY COUNTY

STATE	AIR-FREEZING INDEX					
	1500 or less	2000	2500	3000	3500	4000
Mississippi	All counties	—	—	—	—	—
Missouri	All counties not listed	Atchison, Mercer, Nodaway, Putnam	—	—	—	—
Montana	Mineral	Broadwater, Golden Valley, Granite, Lake, Lincoln, Missoula, Ravalli, Sanders, Sweet Grass	Big Horn, Carbon, Jefferson, Judith Basin, Lewis and Clark, Meagher, Musselshell, Powder River, Powell, Silver Bow, Stillwater, Westland	Carter, Cascade, Deer Lodge, Falcon, Fergus, Flathead, Gallanting, Glacier, Madison, Park, Petroleum, Ponder, Rosebud, Teton, Treasure, Yellowstone	Beaverhead, Blaine, Chouteau, Custer, Dawson, Garfield, Liberty, McCone, Prairie, Toole, Wibaux	Daniels, Hill, Phillips, Richland, Roosevelt, Sheridan, Valley
Nebraska	Adams, Banner, Chase, Cheyenne, Clay, Deuel, Dundy, Fillmore, Franklin, Frontier, Furnas, Gage, Garden, Gosper, Harlan, Hayes, Hitchcock, Jefferson, Kimball, Morrill, Nemaha, Nuckolls, Pawnee, Perkins, Phelps, Red Willow, Richardson, Saline, Scotts Bluff, Seward, Thayer, Webster	All counties not listed	Boyd, Burt, Cedar, Cuming, Dakota, Dixon, Dodge, Knox, Thurston	—	—	—
Nevada	All counties not listed	Elko, Eureka, Nye, Washoe, White Pine	—	—	—	—
New Hampshire	—	All counties not listed	—	—	—	Carroll, Coos, Grafton
New Jersey	All counties	—	—	—	—	—
New Mexico	All counties not listed	Rio Arriba	Colfax, Mora, Taos	—	—	—
New York	Albany, Bronx, Cayuga, Columbia, Cortland, Dutchess, Genessee, Kings, Livingston, Monroe, Nassau, New York, Niagara, Onondaga, Ontario, Orange, Orleans, Putnam, Queens, Richmond, Rockland, Seneca, Suffolk, Wayne, Westchester, Yates	All counties not listed	Clinton, Essex, Franklin, Hamilton, Herkimer, Jefferson, Lewis, St. Lawrence, Warren	—	—	—
North Carolina	All counties	—	—	—	—	—

(continued)

TABLE R403.3(2)—continued
AIR-FREEZING INDEX FOR U.S. LOCATIONS BY COUNTY

STATE	AIR-FREEZING INDEX					
	1500 or less	2000	2500	3000	3500	4000
North Dakota	—	—	—	Billings, Bowman	Adams, Dickey, Golden Valley, Hettinger, LaMoure, Oliver, Ransom, Sargent, Sioux, Slope, Stark	All counties not listed
Ohio	All counties not listed	Ashland, Crawford, Defiance, Holmes, Huron, Knox, Licking, Morrow, Paulding, Putnam, Richland, Seneca, Williams	—	—	—	—
Oklahoma	All counties	—	—	—	—	—
Oregon	All counties not listed	Baker, Crook, Grant, Harney	—	—	—	—
Pennsylvania	All counties not listed	Berks, Blair, Bradford, Cambria, Cameron, Centre, Clarion, Clearfield, Clinton, Crawford, Elk, Forest, Huntingdon, Indiana, Jefferson, Lackawanna, Lycoming, McKean, Pike, Potter, Susquehanna, Tioga, Venango, Warren, Wayne, Wyoming	—	—	—	—
Rhode Island	All counties	—	—	—	—	—
South Carolina	All counties	—	—	—	—	—
South Dakota	—	Bennett, Custer, Fall River, Lawrence, Mellette, Shannon, Todd, Tripp	Bon Homme, Charles Mix, Davison, Douglas, Gregory, Jackson, Jones, Lyman	All counties not listed	Beadle, Brookings, Brown, Campbell, Codington, Corson, Day, Deuel, Edmunds, Faulk, Grant, Hamlin, Kingsbury, Marshall, McPherson, Perkins, Roberts, Spink, Walworth	—
Tennessee	All counties	—	—	—	—	—
Texas	All counties	—	—	—	—	—
Utah	All counties not listed	Box Elder, Morgan, Weber	Garfield, Salt Lake, Summit	Carbon, Daggett, Duchesne, Rich, Sanpete, Uintah, Wasatch	—	—

(continued)

TABLE R403.3(2)—continued
AIR-FREEZING INDEX FOR U.S. LOCATIONS BY COUNTY

STATE	AIR-FREEZING INDEX					
	1500 or less	2000	2500	3000	3500	4000
Vermont	—	Bennington, Grand Isle, Rutland, Windham	Addison, Chittenden, Franklin, Orange, Washington, Windsor	Caledonia, Essex, Lamoille, Orleans	—	—
Virginia	All counties	—	—	—	—	—
Washington	All counties not listed	Chelan, Douglas, Ferry, Okanogan	—	—	—	—
West Virginia	All counties	—	—	—	—	—
Wisconsin	—	Kenosha, Kewaunee, Racine, Sheboygan, Walworth	All counties not listed	Ashland, Barron, Burnett, Chippewa, Clark, Dunn, Eau Claire, Florence, Forest, Iron, Jackson, La Crosse, Langlade, Marathon, Monroe, Pepin, Polk, Portage, Price, Rust, St. Croix, Taylor, Trempealeau, Vilas, Wood	Bayfield, Douglas, Lincoln, Oneida, Sawyer, Washburn	—
Wyoming	Goshen, Platte	Converse, Crook, Laramie, Niobrara	Campbell, Carbon, Hot Springs, Johnson, Natrona, Sheridan, Uinta, Weston	Albany, Big Horn, Park, Washakie	Fremont, Teton	Lincoln, Sublette, Sweetwater

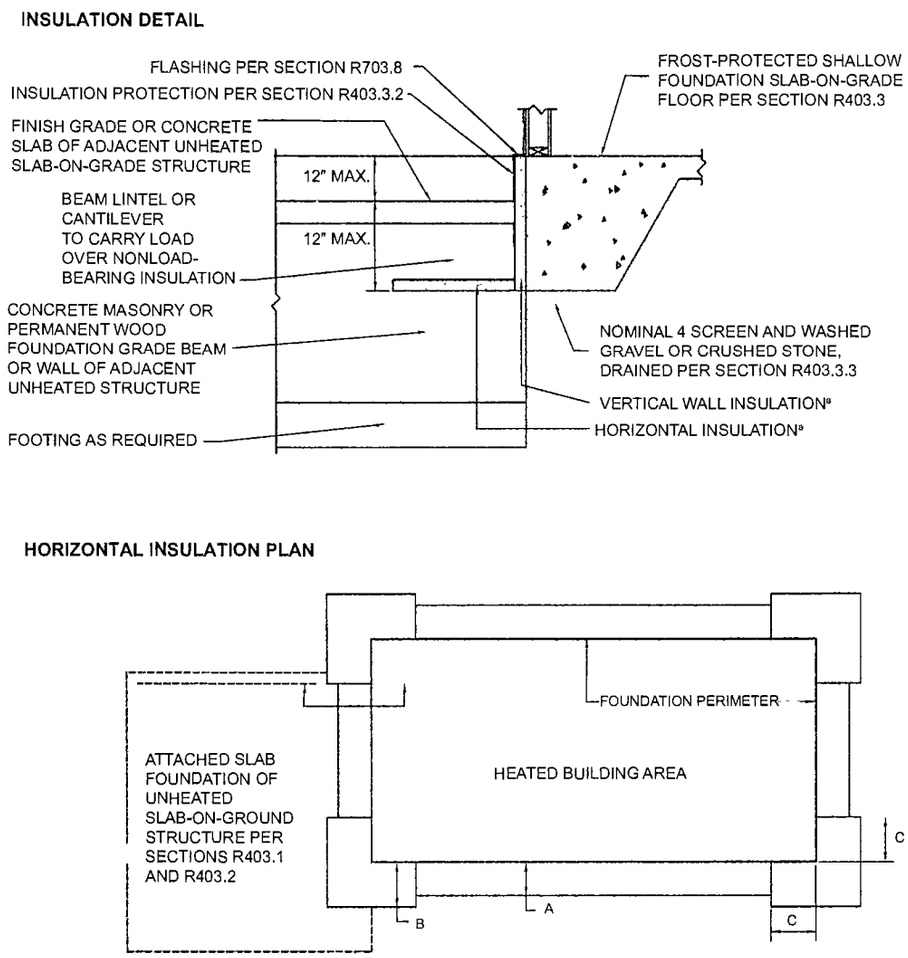

For SI: 1 inch = 25.4 mm.

a. See Table R403.3(1) for required dimensions and *R*-values for vertical and horizontal insulation.

FIGURE R403.3(3)
INSULATION PLACEMENT FOR FROST-PROTECTED FOOTINGS ADJACENT TO UNHEATED SLAB-ON-GROUND STRUCTURE

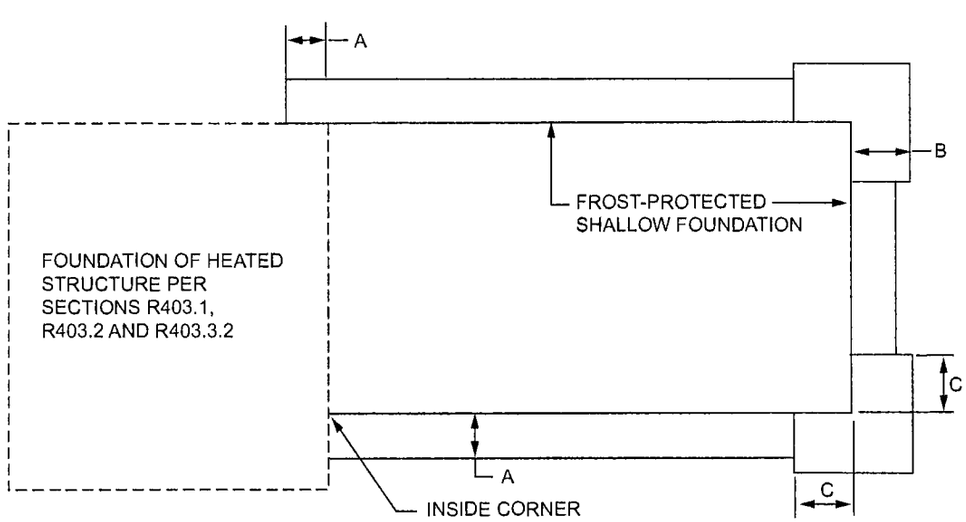

FIGURE R403.3(4)
INSULATION PLACEMENT FOR FROST-PROTECTED FOOTINGS ADJACENT TO HEATED STRUCTURE

TABLE R403.4
MINIMUM DEPTH (D) AND WIDTH (W) OF CRUSHED STONE FOOTINGS[a, b] (inches)

NUMBER OF STORIES	UNIFORM WALL LOAD	DEPTH (D) AND WIDTH (W)	LOAD-BEARING VALUE OF SOIL (psf)																	
			1500			2000			2500			3000			3500			4000		
			MH, CH, CL, ML[c]			SC, GC, SM, GM, SP, SW[c]						GP, GW[c]								
			Wall width (inches)			Wall width (inches)			Wall width (inches)			Wall width (inches)			Wall width (inches)			Wall width (inches)		
			8	10	12	8	10	12	8	10	12	8	10	12	8	10	12	8	10	12
Conventional light-frame construction																				
1-story	1100 plf	D	4	4	4	4	4	4	4	4	4	4	4	4	4	4	4	4	4	4
		W	13	15	17	13	15	17	13	15	17	13	15	17	13	15	17	13	15	17
2-story	1800 plf	D	6	4	4	4	4	4	4	4	4	4	4	4	4	4	4	4	4	4
		W	15	15	17	13	15	17	13	15	17	13	15	17	13	15	17	13	15	17
3-story	2900 plf	D	14	12	10	9	7	5	6	4	4	4	4	4	4	4	4	4	4	4
		W	25	24	24	19	19	18	15	15	17	13	15	17	13	15	17	13	15	17
4-inch brick veneer over light-frame or 8-inch hollow concrete masonry																				
1-story	1500 plf	D	4	4	4	4	4	4	4	4	4	4	4	4	4	4	4	4	4	4
		W	13	15	17	13	15	17	13	15	17	13	15	17	13	15	17	13	15	17
2-story	2700 plf	D	12	11	9	8	6	4	5	4	4	4	4	4	4	4	4	4	4	4
		W	22	23	23	18	17	17	14	15	17	13	15	17	13	15	17	13	15	17
3-story	4000 plf	D	21	20	18	14	13	11	10	8	7	7	6	4	5	4	4	4	4	4
		W	33	34	33	25	26	25	20	20	21	17	17	17	14	15	17	13	15	17
8-inch solid or fully grouted masonry																				
1-story	2000 plf	D	7	6	4	4	4	4	4	4	4	4	4	4	4	4	4	4	4	4
		W	17	17	17	13	15	17	13	15	17	13	15	17	13	15	17	13	15	17
2-story	3600 plf	D	19	17	15	12	11	9	9	7	5	6	4	4	4	4	4	4	4	4
		W	30	30	30	22	23	23	19	19	18	15	15	17	13	15	17	13	15	17
3-story	5300 plf	D	30	29	27	21	19	18	16	14	12	12	10	8	9	8	6	7	6	4
		W	43	44	44	33	32	33	27	27	26	22	22	22	19	20	19	17	17	17

For SI: 1 inch = 25.4 mm, 1 plf = 14.6 N/m, 1 pound per square foot = 47.9 N/m^2.

a. Linear interpolation of stone depth between wall widths is permitted within each Load-Bearing Value of Soil (psf).

b. Crushed stone must be consolidated in 8-inch lifts with a plate vibrator.

c. Soil classes are in accordance with the Unified Soil Classification System. Refer to Table R4045.1.

R403.3.1.2 Attachment to heated structure. Where a frost-protected shallow foundation abuts a structure that has a monthly mean temperature maintained at not less than 64°F (18°C), horizontal insulation and vertical wall insulation shall not be required between the frost-protected shallow foundation and the adjoining structure. Where the frost-protected shallow foundation abuts the heated structure, the horizontal insulation and vertical wall insulation shall extend along the adjoining foundation in accordance with Figure R403.3(4) a distance of not less than Dimension A in Table R403.3(1).

Exception: Where the frost-protected shallow foundation abuts the heated structure to form an inside corner, vertical insulation extending along the adjoining foundation is not required.

R403.3.2 Protection of horizontal insulation below ground. Horizontal insulation placed less than 12 inches (305 mm) below the ground surface or that portion of horizontal insulation extending outward more than 24 inches (610 mm) from the foundation edge shall be protected against damage by use of a concrete slab or asphalt paving on the ground surface directly above the insulation or by cementitious board, plywood rated for below-ground use, or other approved materials placed below ground, directly above the top surface of the insulation.

R403.3.3 Drainage. Final grade shall be sloped in accordance with Section R401.3. In other than Group I Soils, as detailed in Table R405.1, gravel or crushed stone beneath horizontal insulation below ground shall drain to daylight or into an approved sewer system.

R403.3.4 Termite protection. The use of foam plastic in areas of "very heavy" termite infestation probability shall be in accordance with Section R318.4.

R403.4 Footings for precast concrete foundations. Footings for precast concrete foundations shall comply with Section R403.4.

R403.4.1 Crushed stone footings. Clean crushed stone shall be free from organic, clayey or silty soils. Crushed stone shall be angular in nature and meet ASTM C33, with the maximum size stone not to exceed $^1/_2$ inch (12.7 mm) and the minimum stone size not to be smaller than $^1/_{16}$ inch (1.6 mm). Crushed stone footings for precast foundations shall be installed in accordance with Figure R403.4(1) and Table R403.4. Crushed stone footings shall be consolidated using a vibratory plate in not greater than 8-inch (203 mm) lifts. Crushed stone footings shall be limited to Seismic Design Categories A, B and C.

R403.4.2 Concrete footings. Concrete footings shall be installed in accordance with Section R403.1 and Figure R403.4(2).

SECTION R404
FOUNDATION AND RETAINING WALLS

R404.1 Concrete and masonry foundation walls. Concrete foundation walls shall be selected and constructed in accordance with the provisions of Section R404.1.3. Masonry foundation walls shall be selected and constructed in accordance with the provisions of Section R404.1.2.

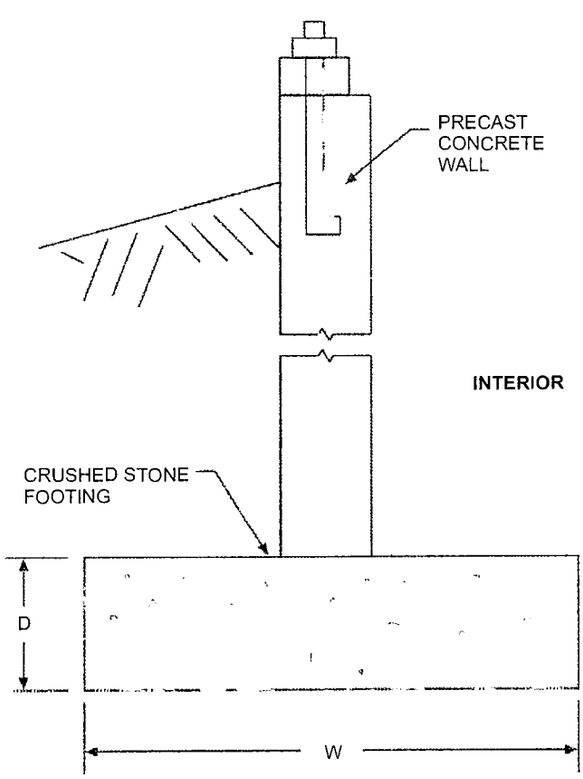

FIGURE R403.4(1)
BASEMENT OR CRAWL SPACE WITH PRECAST FOUNDATION WALL BEARING ON CRUSHED STONE

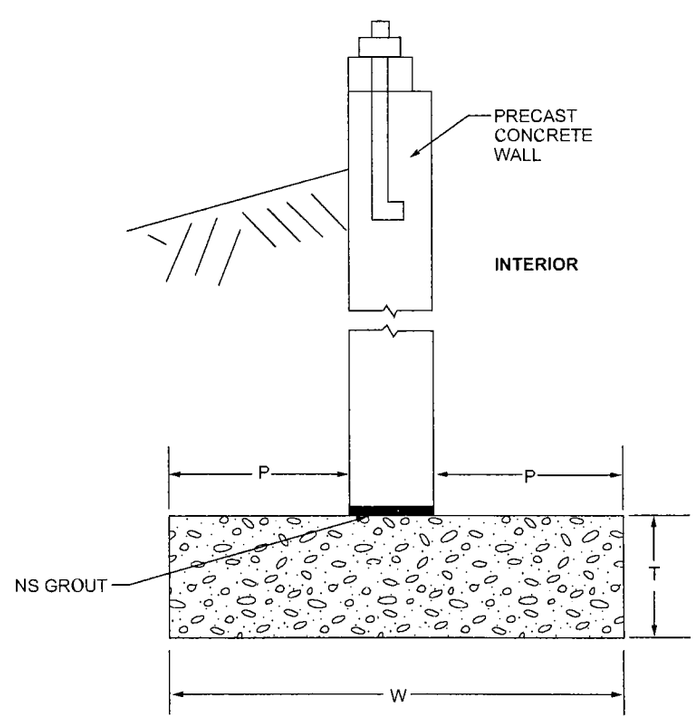

FIGURE R403.4(2)
BASEMENT OR CRAWL SPACE WITH PRECAST FOUNDATION WALL ON SPREAD FOOTING

R404.1.1 Design required. Concrete or masonry foundation walls shall be designed in accordance with accepted engineering practice where either of the following conditions exists:

1. Walls are subject to hydrostatic pressure from ground water.
2. Walls supporting more than 48 inches (1219 mm) of unbalanced backfill that do not have permanent lateral support at the top or bottom.

R404.1.2 Design of masonry foundation walls. Masonry foundation walls shall be designed and constructed in accordance with the provisions of this section or in accordance with the provisions of TMS 402. Where TMS 402 or the provisions of this section are used to design masonry foundation walls, project drawings, typical details and specifications are not required to bear the seal of the architect or engineer responsible for design, unless otherwise required by the state law of the jurisdiction having authority.

R404.1.2.1 Masonry foundation walls. Concrete masonry and clay masonry foundation walls shall be constructed as set forth in Table R404.1.1(1), R404.1.1(2), R404.1.1(3) or R404.1.1(4) and shall comply with applicable provisions of Section R606. In buildings assigned to Seismic Design Categories D_0, D_1 and D_2, concrete masonry and clay masonry foundation walls shall also comply with Section R404.1.4.1. Rubble stone masonry foundation walls shall be constructed in accordance with Sections R404.1.8 and R606.4.2. Rubble stone masonry walls shall not be used in Seismic Design Categories D_0, D_1 and D_2.

R404.1.3 Concrete foundation walls. Concrete foundation walls that support light-frame walls shall be designed and constructed in accordance with the provisions of this section, ACI 318, ACI 332 or PCA 100. Concrete foundation walls that support above-grade concrete walls that are within the applicability limits of Section R608.2 shall be designed and constructed in accordance with the provisions of this section, ACI 318, ACI 332 or PCA 100. Concrete foundation walls that support above-grade concrete walls that are not within the applicability limits of Section R608.2 shall be designed and constructed in accordance with the provisions of ACI 318, ACI 332 or PCA 100. Where ACI 318, ACI 332, PCA 100 or the provisions of this section are used to design concrete foundation walls, project drawings, typical details and specifications are not required to bear the seal of the architect or engineer responsible for design, unless otherwise required by the state law of the jurisdiction having authority.

TABLE R404.1.1(1)
PLAIN MASONRY FOUNDATION WALLS[f]

MAXIMUM WALL HEIGHT (feet)	MAXIMUM UNBALANCED BACKFILL HEIGHT[c] (feet)	PLAIN MASONRY[a] MINIMUM NOMINAL WALL THICKNESS (Inches)		
		Soil classes[b]		
		GW, GP, SW and SP	GM, GC, SM, SM-SC and ML	SC, MH, ML-CL and Inorganic CL
5	4	6 solid[d] or 8	6 solid[d] or 8	6 solid[d] or 8
	5	6 solid[d] or 8	8	10
6	4	6 solid[d] or 8	6 solid[d] or 8	6 solid[d] or 8
	5	6 solid[d] or 8	8	10
	6	8	10	12
7	4	6 solid[d] or 8	8	8
	5	6 solid[d] or 8	10	10
	6	10	12	10 solid[d]
	7	12	10 solid[d]	12 solid[d]
8	4	6 solid[d] or 8	6 solid[d] or 8	8
	5	6 solid[d] or 8	10	12
	6	10	12	12 solid[d]
	7	12	12 solid[d]	Footnote e
	8	10 grout[d]	12 grout[d]	Footnote e
9	4	6 grout[d] or 8 solid[d] or 12	6 grout[d] or 8 solid[d]	8 grout[d] or 10 solid[d]
	5	6 grout[d] or 10 solid[d]	8 grout[d] or 12 solid[d]	8 grout[d]
	6	8 grout[d] or 12 solid[d]	10 grout[d]	10 grout[d]
	7	10 grout[d]	10 grout[d]	12 grout
	8	10 grout[d]	12 grout	Footnote e
	9	12 grout	Footnote e	Footnote e

For SI: 1 inch = 25.4 mm, 1 foot = 304.8 mm, 1 pound per square inch = 6.895 Pa.

a. Mortar shall be Type M or S and masonry shall be laid in running bond. Ungrouted hollow masonry units are permitted except where otherwise indicated.

b. Soil classes are in accordance with the Unified Soil Classification System. Refer to Table R405.1.

c. Unbalanced backfill height is the difference in height between the exterior finish ground level and the lower of the top of the concrete footing that supports the foundation wall or the interior finish ground level. Where an interior concrete slab-on-grade is provided and is in contact with the interior surface of the foundation wall, measurement of the unbalanced backfill height from the exterior finish ground level to the top of the interior concrete slab is permitted.

d. Solid indicates solid masonry unit; grout indicates grouted hollow units.

e. Wall construction shall be in accordance with either Table R404.1.1(2), Table R404.1.1(3), Table R404.1.1(4), or a design shall be provided.

f. The use of this table shall be prohibited for soil classifications not shown.

TABLE R404.1.1(2)
8-INCH MASONRY FOUNDATION WALLS WITH REINFORCING WHERE d ≥ 5 INCHES[a, c, f]

WALL HEIGHT	HEIGHT OF UNBALANCED BACKFILL[e]	MINIMUM VERTICAL REINFORCEMENT AND SPACING (INCHES)[b, c]		
		Soil classes and lateral soil load[d] (psf per foot below grade)		
		GW, GP, SW and SP soils 30	GM, GC, SM, SM-SC and ML soils 45	SC, ML-CL and Inorganic CL soils 60
6 feet 8 inches	4 feet (or less)	#4 at 48	#4 at 48	#4 at 48
	5 feet	#4 at 48	#4 at 48	#4 at 48
	6 feet 8 inches	#4 at 48	#5 at 48	#6 at 48
7 feet 4 inches	4 feet (or less)	#4 at 48	#4 at 48	#4 at 48
	5 feet	#4 at 48	#4 at 48	#4 at 48
	6 feet	#4 at 48	#5 at 48	#5 at 48
	7 feet 4 inches	#5 at 48	#6 at 48	#6 at 40
8 feet	4 feet (or less)	#4 at 48	#4 at 48	#4 at 48
	5 feet	#4 at 48	#4 at 48	#4 at 48
	6 feet	#4 at 48	#5 at 48	#5 at 48
	7 feet	#5 at 48	#6 at 48	#6 at 40
	8 feet	#5 at 48	#6 at 48	#6 at 32
8 feet 8 inches	4 feet (or less)	#4 at 48	#4 at 48	#4 at 48
	5 feet	#4 at 48	#4 at 48	#5 at 48
	6 feet	#4 at 48	#5 at 48	#6 at 48
	7 feet	#5 at 48	#6 at 48	#6 at 40
	8 feet 8 inches	#6 at 48	#6 at 32	#6 at 24
9 feet 4 inches	4 feet (or less)	#4 at 48	#4 at 48	#4 at 48
	5 feet	#4 at 48	#4 at 48	#5 at 48
	6 feet	#4 at 48	#5 at 48	#6 at 48
	7 feet	#5 at 48	#6 at 48	#6 at 40
	8 feet	#6 at 48	#6 at 40	#6 at 24
	9 feet 4 inches	#6 at 40	#6 at 24	#6 at 16
10 feet	4 feet (or less)	#4 at 48	#4 at 48	#4 at 48
	5 feet	#4 at 48	#4 at 48	#5 at 48
	6 feet	#4 at 48	#5 at 48	#6 at 48
	7 feet	#5 at 48	#6 at 48	#6 at 32
	8 feet	#6 at 48	#6 at 32	#6 at 24
	9 feet	#6 at 40	#6 at 24	#6 at 16
	10 feet	#6 at 32	#6 at 16	#6 at 16

For SI: 1 inch = 25.4 mm, 1 foot = 304.8 mm, 1 pound per square foot per foot = 0.157 kPa/mm.

a. Mortar shall be Type M or S and masonry shall be laid in running bond.

b. Alternative reinforcing bar sizes and spacings having an equivalent cross-sectional area of reinforcement per lineal foot of wall shall be permitted provided the spacing of the reinforcement does not exceed 72 inches in Seismic Design Categories A, B and C, and 48 inches in Seismic Design Categories D_0, D_1 and D_2.

c. Vertical reinforcement shall be Grade 60 minimum. The distance, *d*, from the face of the soil side of the wall to the center of vertical reinforcement shall be not less than 5 inches.

d. Soil classes are in accordance with the Unified Soil Classification System and design lateral soil loads are for moist conditions without hydrostatic pressure. Refer to Table R405.1.

e. Unbalanced backfill height is the difference in height between the exterior finish ground level and the lower of the top of the concrete footing that supports the foundation wall or the interior finish ground level. Where an interior concrete slab-on-grade is provided and is in contact with the interior surface of the foundation wall, measurement of the unbalanced backfill height from the exterior finish ground level to the top of the interior concrete slab is permitted.

f. The use of this table shall be prohibited for soil classifications not shown.

TABLE R404.1.1(3)
10-INCH MASONRY FOUNDATION WALLS WITH REINFORCING WHERE d ≥ 6.75 INCHES[a, c, f]

WALL HEIGHT	HEIGHT OF UNBALANCED BACKFILL[e]	MINIMUM VERTICAL REINFORCEMENT AND SPACING (INCHES)[b, c]		
		Soil classes and later soil load[d] (psf per foot below grade)		
		GW, GP, SW and SP soils 30	GM, GC, SM, SM-SC and ML soils 45	SC, ML-CL and inorganic CL soils 60
6 feet 8 inches	4 feet (or less)	#4 at 56	#4 at 56	#4 at 56
	5 feet	#4 at 56	#4 at 56	#4 at 56
	6 feet 8 inches	#4 at 56	#5 at 56	#5 at 56
7 feet 4 inches	4 feet (or less)	#4 at 56	#4 at 56	#4 at 56
	5 feet	#4 at 56	#4 at 56	#4 at 56
	6 feet	#4 at 56	#4 at 56	#5 at 56
	7 feet 4 inches	#4 at 56	#5 at 56	#6 at 56
8 feet	4 feet (or less)	#4 at 56	#4 at 56	#4 at 56
	5 feet	#4 at 56	#4 at 56	#4 at 56
	6 feet	#4 at 56	#4 at 56	#5 at 56
	7 feet	#4 at 56	#5 at 56	#6 at 56
	8 feet	#5 at 56	#6 at 56	#6 at 48
8 feet 8 inches	4 feet (or less)	#4 at 56	#4 at 56	#4 at 56
	5 feet	#4 at 56	#4 at 56	#4 at 56
	6 feet	#4 at 56	#4 at 56	#5 at 56
	7 feet	#4 at 56	#5 at 56	#6 at 56
	8 feet 8 inches	#5 at 56	#6 at 48	#6 at 32
9 feet 4 inches	4 feet (or less)	#4 at 56	#4 at 56	#4 at 56
	5 feet	#4 at 56	#4 at 56	#4 at 56
	6 feet	#4 at 56	#5 at 56	#5 at 56
	7 feet	#4 at 56	#5 at 56	#6 at 56
	8 feet	#5 at 56	#6 at 56	#6 at 40
	9 feet 4 inches	#6 at 56	#6 at 40	#6 at 24
10 feet	4 feet (or less)	#4 at 56	#4 at 56	#4 at 56
	5 feet	#4 at 56	#4 at 56	#4 at 56
	6 feet	#4 at 56	#5 at 56	#5 at 56
	7 feet	#5 at 56	#6 at 56	#6 at 48
	8 feet	#5 at 56	#6 at 48	#6 at 40
	9 feet	#6 at 56	#6 at 40	#6 at 24
	10 feet	#6 at 48	#6 at 32	#6 at 24

For SI: 1 inch = 25.4 mm, 1 foot = 304.8 mm, 1 pound per square foot per foot = 0.157 kPa/mm.

a. Mortar shall be Type M or S and masonry shall be laid in running bond.

b. Alternative reinforcing bar sizes and spacings having an equivalent cross-sectional area of reinforcement per lineal foot of wall shall be permitted provided the spacing of the reinforcement does not exceed 72 inches in Seismic Design Categories A, B and C, and 48 inches in Seismic Design Categories D_0, D_1 and D_2.

c. Vertical reinforcement shall be Grade 60 minimum. The distance, *d*, from the face of the soil side of the wall to the center of vertical reinforcement shall be not less than 6.75 inches.

d. Soil classes are in accordance with the Unified Soil Classification System and design lateral soil loads are for moist conditions without hydrostatic pressure. Refer to Table R405.1.

e. Unbalanced backfill height is the difference in height between the exterior finish ground level and the lower of the top of the concrete footing that supports the foundation wall or the interior finish ground level. Where an interior concrete slab-on-grade is provided and is in contact with the interior surface of the foundation wall, measurement of the unbalanced backfill height from the exterior finish ground level to the top of the interior concrete slab is permitted.

f. The use of this table shall be prohibited for soil classifications not shown.

TABLE R404.1.1(4)
12-INCH MASONRY FOUNDATION WALLS WITH REINFORCING WHERE d ≥ 8.75 INCHES[a, c, f]

WALL HEIGHT	HEIGHT OF UNBALANCED BACKFILL[e]	MINIMUM VERTICAL REINFORCEMENT AND SPACING (INCHES)[b, c]		
		Soil classes and lateral soil load[d] (psf per foot below grade)		
		GW, GP, SW and SP soils 30	GM, GC, SM, SM-SC and ML soils 45	SC, ML-CL and inorganic CL soils 60
6 feet 8 inches	4 feet (or less)	#4 at 72	#4 at 72	#4 at 72
	5 feet	#4 at 72	#4 at 72	#4 at 72
	6 feet 8 inches	#4 at 72	#4 at 72	#5 at 72
7 feet 4 inches	4 feet (or less)	#4 at 72	#4 at 72	#4 at 72
	5 feet	#4 at 72	#4 at 72	#4 at 72
	6 feet	#4 at 72	#4 at 72	#5 at 72
	7 feet 4 inches	#4 at 72	#5 at 72	#6 at 72
8 feet	4 feet (or less)	#4 at 72	#4 at 72	#4 at 72
	5 feet	#4 at 72	#4 at 72	#4 at 72
	6 feet	#4 at 72	#4 at 72	#5 at 72
	7 feet	#4 at 72	#5 at 72	#6 at 72
	8 feet	#5 at 72	#6 at 72	#6 at 64
8 feet 8 inches	4 feet (or less)	#4 at 72	#4 at 72	#4 at 72
	5 feet	#4 at 72	#4 at 72	#4 at 72
	6 feet	#4 at 72	#4 at 72	#5 at 72
	7 feet	#4 at 72	#5 at 72	#6 at 72
	8 feet 8 inches	#5 at 72	#7 at 72	#6 at 48
9 feet 4 inches	4 feet (or less)	#4 at 72	#4 at 72	#4 at 72
	5 feet	#4 at 72	#4 at 72	#4 at 72
	6 feet	#4 at 72	#5 at 72	#5 at 72
	7 feet	#4 at 72	#5 at 72	#6 at 72
	8 feet	#5 at 72	#6 at 72	#6 at 56
	9 feet 4 inches	#6 at 72	#6 at 48	#6 at 40
10 feet	4 feet (or less)	#4 at 72	#4 at 72	#4 at 72
	5 feet	#4 at 72	#4 at 72	#4 at 72
	6 feet	#4 at 72	#5 at 72	#5 at 72
	7 feet	#4 at 72	#6 at 72	#6 at 72
	8 feet	#5 at 72	#6 at 72	#6 at 48
	9 feet	#6 at 72	#6 at 56	#6 at 40
	10 feet	#6 at 64	#6 at 40	#6 at 32

For SI: 1 inch = 25.4 mm, 1 foot = 304.8 mm, 1 pound per square foot per foot = 0.157 kPa/mm.

a. Mortar shall be Type M or S and masonry shall be laid in running bond.

b. Alternative reinforcing bar sizes and spacings having an equivalent cross-sectional area of reinforcement per lineal foot of wall shall be permitted provided the spacing of the reinforcement does not exceed 72 inches in Seismic Design Categories A, B and C, and 48 inches in Seismic Design Categories D_0, D_1 and D_2.

c. Vertical reinforcement shall be Grade 60 minimum. The distance, *d*, from the face of the soil side of the wall to the center of vertical reinforcement shall be not less than 8.75 inches.

d. Soil classes are in accordance with the Unified Soil Classification System and design lateral soil loads are for moist conditions without hydrostatic pressure. Refer to Table R405.1.

e. Unbalanced backfill height is the difference in height between the exterior finish ground level and the lower of the top of the concrete footing that supports the foundation wall or the interior finish ground levels. Where an interior concrete slab-on-grade is provided and in contact with the interior surface of the foundation wall, measurement of the unbalanced backfill height is permitted to be measured from the exterior finish ground level to the top of the interior concrete slab is permitted.

f. The use of this table shall be prohibited for soil classifications not shown.

TABLE R404.1.2(1)
MINIMUM HORIZONTAL REINFORCEMENT FOR CONCRETE BASEMENT WALLS[a, b]

MAXIMUM UNSUPPORTED HEIGHT OF BASEMENT WALL (feet)	LOCATION OF HORIZONTAL REINFORCEMENT
≤ 8	One No. 4 bar within 12 inches of the top of the wall story and one No. 4 bar near mid-height of the wall story.
> 8	One No. 4 bar within 12 inches of the top of the wall story and one No. 4 bar near third points in the wall story.

For SI: 1 inch = 25.4 mm, 1 foot = 304.8 mm, 1 pound per square inch = 6.895 kPa.

a. Horizontal reinforcement requirements are for reinforcing bars with a minimum yield strength of 40,000 psi and concrete with a minimum concrete compressive strength of 2,500 psi.

b. See Section R404.1.3.2 for minimum reinforcement required for foundation walls supporting above-grade concrete walls.

TABLE R404.1.2(2)
MINIMUM VERTICAL REINFORCEMENT FOR 6-INCH NOMINAL FLAT CONCRETE BASEMENT WALLS[b, c, d, e, g, h, i, j, k]

MAXIMUM UNSUPPORTED WALL HEIGHT (feet)	MAXIMUM UNBALANCED BACKFILL HEIGHT[f] (feet)	MINIMUM VERTICAL REINFORCEMENT-BAR SIZE AND SPACING (inches)		
		Soil classes[a] and design lateral soil (psf per foot of depth)		
		GW, GP, SW, SP 30	GM, GC, SM, SM-SC and ML 45	SC, ML-CL and Inorganic CL 60
8	4	NR	NR	NR
	5	NR	6 @ 39	6 @ 48
	6	5 @ 39	6 @ 48	6 @ 35
	7	6 @ 48	6 @ 34	6 @ 25
	8	6 @ 39	6 @ 25	6 @ 18
9	4	NR	NR	NR
	5	NR	5 @ 37	6 @ 48
	6	5 @ 36	6 @ 44	6 @ 32
	7	6 @ 47	6 @ 30	6 @ 22
	8	6 @ 34	6 @ 22	6 @ 16
	9	6 @ 27	6 @ 17	DR
10	4	NR	NR	NR
	5	NR	5 @ 35	6 @ 48
	6	6 @ 48	6 @ 41	6 @ 30
	7	6 @ 43	6 @ 28	6 @ 20
	8	6 @ 31	6 @ 20	DR
	9	6 @ 24	6 @ 15	DR
	10	6 @ 19	DR	DR

For SI: 1 inch = 25.4 mm; 1 foot = 304.8 mm; 1 pound per square foot per foot = 0.1571 kPa^2/m, 1 pound per square inch = 6.895 kPa.

NR = Not Required.

DR = Design Required.

a. Soil classes are in accordance with the Unified Soil Classification System. Refer to Table R405.1.

b. Table values are based on reinforcing bars with a minimum yield strength of 60,000 psi concrete with a minimum specified compressive strength of 2,500 psi and vertical reinforcement being located at the centerline of the wall. See Section R404.1.3.3.7.2.

c. Vertical reinforcement with a yield strength of less than 60,000 psi and bars of a different size than specified in the table are permitted in accordance with Section R404.1.3.3.7.6 and Table R404.1.2(9).

d. Deflection criterion is $L/240$, where L is the height of the basement wall in inches.

e. Interpolation is not permitted.

f. Where walls will retain 4 feet or more of unbalanced backfill, they shall be laterally supported at the top and bottom before backfilling.

g. NR indicates vertical wall reinforcement is not required, except for 6-inch-nominal walls formed with stay-in-place forming systems in which case vertical reinforcement shall be No. 4@48 inches on center.

h. See Section R404.1.3.2 for minimum reinforcement required for basement walls supporting above-grade concrete walls.

i. See Table R608.3 for tolerance from nominal thickness permitted for flat walls.

j. DR means design is required in accordance with the applicable building code, or in the absence of a code, in accordance with ACI 318.

k. The use of this table shall be prohibited for soil classifications not shown.

TABLE R404.1.2(3)
MINIMUM VERTICAL REINFORCEMENT FOR 8-INCH (203 mm) NOMINAL FLAT CONCRETE BASEMENT WALLS[b, c, d, e, f, h, i, j]

MAXIMUM UNSUPPORTED WALL HEIGHT (feet)	MAXIMUM UNBALANCED BACKFILL HEIGHT[g] (feet)	MINIMUM VERTICAL REINFORCEMENT-BAR SIZE AND SPACING (inches)		
		Soil classes[a] and design lateral soil (psf per foot of depth)		
		GW, GP, SW, SP 30	GM, GC, SM, SM-SC and ML 45	SC, ML-CL and Inorganic CL 60
8	4	NR	NR	NR
	5	NR	NR	NR
	6	NR	NR	6 @ 37
	7	NR	6 @ 36	6 @ 35
	8	6 @ 41	6 @ 35	6 @ 26
9	4	NR	NR	NR
	5	NR	NR	NR
	6	NR	NR	6 @ 35
	7	NR	6 @ 35	6 @ 32
	8	6 @ 36	6 @ 32	6 @ 23
	9	6 @ 35	6 @ 25	6 @ 18
10	4	NR	NR	NR
	5	NR	NR	NR
	6	NR	NR	6 @ 35
	7	NR	6 @ 35	6 @ 29
	8	6 @ 35	6 @ 29	6 @ 21
	9	6 @ 34	6 @ 22	6 @ 16
	10	6 @ 27	6 @ 17	6 @ 13

For SI: 1 inch = 25.4 mm; 1 foot = 304.8 mm; 1 pound per square foot per foot = 0.1571 kPa^2/m, 1 pound per square inch = 6.895 kPa.

NR = Not Required.

a. Soil classes are in accordance with the Unified Soil Classification System. Refer to Table R405.1.

b. Table values are based on reinforcing bars with a minimum yield strength of 60,000 psi, concrete with a minimum specified compressive strength of 2,500 psi and vertical reinforcement being located at the centerline of the wall. See Section R404.1.3.3.7.2.

c. Vertical reinforcement with a yield strength of less than 60,000 psi and bars of a different size than specified in the table are permitted in accordance with Section R404.1.3.3.7.6 and Table R404.1.2(9).

d. NR indicates vertical reinforcement is not required.

e. Deflection criterion is $L/240$, where L is the height of the basement wall in inches.

f. Interpolation is not permitted.

g. Where walls will retain 4 feet or more of unbalanced backfill, they shall be laterally supported at the top and bottom before backfilling.

h. See Section R404.1.3.2 for minimum reinforcement required for basement walls supporting above-grade concrete walls.

i. See Table R608.3 for tolerance from nominal thickness permitted for flat walls.

j. The use of this table shall be prohibited for soil classifications not shown.

TABLE R404.1.2(4)
MINIMUM VERTICAL REINFORCEMENT FOR 10-INCH NOMINAL FLAT CONCRETE BASEMENT WALLS[b, c, d, e, f, h, i, j]

MAXIMUM UNSUPPORTED WALL HEIGHT (feet)	MAXIMUM UNBALANCED BACKFILL HEIGHT[g] (feet)	MINIMUM VERTICAL REINFORCEMENT-BAR SIZE AND SPACING (inches)		
		Soil classes[a] and design lateral soil (psf per foot of depth)		
		GW, GP, SW, SP 30	GM, GC, SM, SM-SC and ML 45	SC, ML-CL and Inorganic CL 60
8	4	NR	NR	NR
	5	NR	NR	NR
	6	NR	NR	NR
	7	NR	NR	NR
	8	6 @ 48	6 @ 35	6 @ 28
9	4	NR	NR	NR
	5	NR	NR	NR
	6	NR	NR	NR
	7	NR	NR	6 @ 31
	8	NR	6 @ 31	6 @ 28
	9	6 @ 37	6 @ 28	6 @ 24
10	4	NR	NR	NR
	5	NR	NR	NR
	6	NR	NR	NR
	7	NR	NR	6 @ 28
	8	NR	6 @ 28	6 @ 28
	9	6 @ 33	6 @ 28	6 @ 21
	10	6 @ 28	6 @ 23	6 @ 17

For SI: 1 inch = 25.4 mm; 1 foot = 304.8 mm; 1 pound per square foot per foot = 0.1571 kPa^2/m, 1 pound per square inch = 6.895 kPa.

NR = Not Required.

a. Soil classes are in accordance with the Unified Soil Classification System. Refer to Table R405.1.

b. Table values are based on reinforcing bars with a minimum yield strength of 60,000 psi concrete with a minimum specified compressive strength of 2,500 psi and vertical reinforcement being located at the centerline of the wall. See Section R404.1.3.3.7.2.

c. Vertical reinforcement with a yield strength of less than 60,000 psi and bars of a different size than specified in the table are permitted in accordance with Section R404.1.3.3.7.6 and Table R404.1.2(9).

d. NR indicates vertical reinforcement is not required.

e. Deflection criterion is $L/240$, where L is the height of the basement wall in inches.

f. Interpolation is not permitted.

g. Where walls will retain 4 feet or more of unbalanced backfill, they shall be laterally supported at the top and bottom before backfilling.

h. See Section R404.1.3.2 for minimum reinforcement required for basement walls supporting above-grade concrete walls.

i. See Table R608.3 for tolerance from nominal thickness permitted for flat walls.

j. The use of this table shall be prohibited for soil classifications not shown.

TABLE R404.1.2(5)
MINIMUM VERTICAL WALL REINFORCEMENT FOR 6-INCH WAFFLE-GRID BASEMENT WALLS[b, c, d, e, g, h, i, j]

MAXIMUM UNSUPPORTED WALL HEIGHT (feet)	MAXIMUM UNBALANCED BACKFILL HEIGHT[f] (feet)	MINIMUM VERTICAL REINFORCEMENT-BAR SIZE AND SPACING (inches)		
		Soil classes[a] and design lateral soil (psf per foot of depth)		
		GW, GP, SW, SP 30	GM, GC, SM, SM-SC and ML 45	SC, ML-CL and Inorganic CL 60
8	4	4 @ 48	4 @ 46	6 @ 39
	5	4 @ 45	5 @ 46	6 @ 47
	6	5 @ 45	6 @ 40	DR
	7	6 @ 44	DR	DR
	8	6 @ 32	DR	DR
9	4	4 @ 48	4 @ 46	4 @ 37
	5	4 @ 42	5 @ 43	6 @ 44
	6	5 @ 41	6 @ 37	DR
	7	6 @ 39	DR	DR
	> 8	DR[i]	DR	DR
10	4	4 @ 48	4 @ 46	4 @ 35
	5	4 @ 40	5 @ 40	6 @ 41
	6	5 @ 38	6 @ 34	DR
	7	6 @ 36	DR	DR
	> 8	DR	DR	DR

For SI: 1 inch = 25.4 mm; 1 foot = 304.8 mm; 1 pound per square foot per foot = 0.1571 kPa^2/m, 1 pound per square inch = 6.895 kPa.

DR = Design Required.

a. Soil classes are in accordance with the Unified Soil Classification System. Refer to Table R405.1.

b. Table values are based on reinforcing bars with a minimum yield strength of 60,000 psi concrete with a minimum specified compressive strength of 2,500 psi and vertical reinforcement being located at the centerline of the wall. See Section R404.1.3.3.7.2.

c. Maximum spacings shown are the values calculated for the specified bar size. Where the bar used is Grade 60 and the size specified in the table, the actual spacing in the wall shall not exceed a whole-number multiple of 12 inches (12, 24, 36 and 48) that is less than or equal to the tabulated spacing. Vertical reinforcement with a yield strength of less than 60,000 psi and bars of a different size than specified in the table are permitted in accordance with Section R404.1.3.3.7.6 and Table R404.1.2(9).

d. Deflection criterion is $L/240$, where L is the height of the basement wall in inches.

e. Interpolation is not permitted.

f. Where walls will retain 4 feet or more of unbalanced backfill, they shall be laterally supported at the top and bottom before backfilling.

g. See Section R404.1.3.2 for minimum reinforcement required for basement walls supporting above-grade concrete walls.

h. See Table R608.3 for thicknesses and dimensions of waffle-grid walls.

i. DR means design is required in accordance with the applicable building code, or in the absence of a code, in accordance with ACI 318.

j. The use of this table shall be prohibited for soil classifications not shown.

TABLE R404.1.2(6)
MINIMUM VERTICAL REINFORCEMENT FOR 8-INCH WAFFLE-GRID BASEMENT WALLS[b, c, d, e, f, h, i, j, k]

MAXIMUM UNSUPPORTED WALL HEIGHT (feet)	MAXIMUM UNBALANCED BACKFILL HEIGHT[g] (feet)	MINIMUM VERTICAL REINFORCEMENT-BAR SIZE AND SPACING (inches)		
		Soil classes[a] and design lateral soil (psf per foot of depth)		
		GW, GP, SW, SP 30	GM, GC, SM, SM-SC and ML 45	SC, ML-CL and Inorganic CL 60
8	4	NR	NR	NR
	5	NR	5 @ 48	5 @ 46
	6	5 @ 48	5 @ 43	6 @ 45
	7	5 @ 46	6 @ 43	6 @ 31
	8	6 @ 48	6 @ 32	6 @ 23
9	4	NR	NR	NR
	5	NR	5 @ 47	5 @ 46
	6	5 @ 46	5 @ 39	6 @ 41
	7	5 @ 42	6 @ 38	6 @ 28
	8	6 @ 44	6 @ 28	6 @ 20
	9	6 @ 34	6 @ 21	DR
10	4	NR	NR	NR
	5	NR	5 @ 46	5 @ 44
	6	5 @ 46	5 @ 37	6 @ 38
	7	5 @ 38	6 @ 35	6 @ 25
	8	6 @ 39	6 @ 25	DR
	9	6 @ 30	DR	DR
	10	6 @ 24	DR	DR

For SI: 1 inch = 25.4 mm; 1 foot = 304.8 mm; 1 pound per square foot per foot = 0.1571 kPa^2/m, 1 pound per square inch = 6.895 kPa.

NR = Not Required.

DR = Design Required.

a. Soil classes are in accordance with the Unified Soil Classification System. Refer to Table R405.1.

b. Table values are based on reinforcing bars with a minimum yield strength of 60,000 psi concrete with a minimum specified compressive strength of 2,500 psi and vertical reinforcement being located at the centerline of the wall. See Section R404.1.3.3.7.2.

c. Maximum spacings shown are the values calculated for the specified bar size. Where the bar used is Grade 60 (420 MPa) and the size specified in the table, the actual spacing in the wall shall not exceed a whole-number multiple of 12 inches (12, 24, 36 and 48) that is less than or equal to the tabulated spacing. Vertical reinforcement with a yield strength of less than 60,000 psi and bars of a different size than specified in the table are permitted in accordance with Section R404.1.3.3.7.6 and Table R404.1.2(9).

d. NR indicates vertical reinforcement is not required.

e. Deflection criterion is $L/240$, where L is the height of the basement wall in inches.

f. Interpolation shall not be permitted.

g. Where walls will retain 4 feet or more of unbalanced backfill, they shall be laterally supported at the top and bottom before backfilling.

h. See Section R404.1.3.2 for minimum reinforcement required for basement walls supporting above-grade concrete walls.

i. See Table R608.3 for thicknesses and dimensions of waffle-grid walls.

j. DR means design is required in accordance with the applicable building code, or in the absence of a code, in accordance with ACI 318.

k. The use of this table shall be prohibited for soil classifications not shown.

TABLE R404.1.2(7)
MINIMUM VERTICAL REINFORCEMENT FOR 6-INCH (152 mm) SCREEN-GRID BASEMENT WALLS[b, c, d, e, g, h, i, j]

MAXIMUM UNSUPPORTED WALL HEIGHT (feet)	MAXIMUM UNBALANCED BACKFILL HEIGHT[f] (feet)	MINIMUM VERTICAL REINFORCEMENT-BAR SIZE AND SPACING (Inches)		
		Soil classes[a] and design lateral soil (psf per foot of depth)		
		GW, GP, SW, SP 30	GM, GC, SM, SM-SC and ML 45	SC, ML-CL and inorganic CL 60
8	4	4 @ 48	4 @ 48	5 @ 43
	5	4 @ 48	5 @ 48	5 @ 37
	6	5 @ 48	6 @ 45	6 @ 32
	7	6 @ 48	DR	DR
	8	6 @ 36	DR	DR
9	4	4 @ 48	4 @ 48	4 @ 41
	5	4 @ 48	5 @ 48	6 @ 48
	6	5 @ 45	6 @ 41	DR
	7	6 @ 43	DR	DR
	> 8	DR	DR	DR
10	4	4 @ 48	4 @ 48	4 @ 39
	5	4 @ 44	5 @ 44	6 @ 46
	6	5 @ 42	6 @ 38	DR
	7	6 @ 40	DR	DR
	> 8	DR	DR	DR

For SI: 1 inch = 25.4 mm; 1 foot = 304.8 mm; 1 pound per square foot per foot = 0.1571 kPa^2/m, 1 pound per square inch = 6.895 kPa.

DR = Design Required.

a. Soil classes are in accordance with the Unified Soil Classification System. Refer to Table R405.1.

b. Table values are based on reinforcing bars with a minimum yield strength of 60,000 psi, concrete with a minimum specified compressive strength of 2,500 psi and vertical reinforcement being located at the centerline of the wall. See Section R404.1.3.3.7.2.

c. Maximum spacings shown are the values calculated for the specified bar size. Where the bar used is Grade 60 and the size specified in the table, the actual spacing in the wall shall not exceed a whole-number multiple of 12 inches (12, 24, 36 and 48) that is less than or equal to the tabulated spacing. Vertical reinforcement with a yield strength of less than 60,000 psi and bars of a different size than specified in the table are permitted in accordance with Section R404.1.3.3.7.6 and Table R404.1.2(9).

d. Deflection criterion is $L/240$, where L is the height of the basement wall in inches.

e. Interpolation is not permitted.

f. Where walls will retain 4 feet or more of unbalanced backfill, they shall be laterally supported at the top and bottom before backfilling.

g. See Sections R404.1.3.2 for minimum reinforcement required for basement walls supporting above-grade concrete walls.

h. See Table R608.3 for thicknesses and dimensions of screen-grid walls.

i. DR means design is required in accordance with the applicable building code, or in the absence of a code, in accordance with ACI 318.

j. The use of this table shall be prohibited for soil classifications not shown.

TABLE R404.1.2(8)
MINIMUM VERTICAL REINFORCEMENT FOR 6-, 8-, 10- AND 12-INCH NOMINAL FLAT BASEMENT WALLS[b, c, d, e, f, h, i, k, n, o]

MAXIMUM WALL HEIGHT (feet)	MAXIMUM UNBALANCED BACKFILL HEIGHT[g] (feet)	MINIMUM VERTICAL REINFORCEMENT-BAR SIZE AND SPACING (Inches)											
		Soil classes[a] and design lateral soil (psf per foot of depth)											
		GW, GP, SW, SP 30				GM, GC, SM, SM-SC and ML 45				SC, ML-CL and inorganic CL 60			
		Minimum nominal wall thickness (Inches)											
		6	8	10	12	6	8	10	12	6	8	10	12
5	4	NR	NR	NR	NR	NR	NR	NR	NR	NR	NR	NR	NR
	5	NR	NR	NR	NR	NR	NR	NR	NR	NR	NR	NR	NR
6	4	NR	NR	NR	NR	NR	NR	NR	NR	NR	NR	NR	NR
	5	NR	NR	NR	NR	NR	NR[l]	NR	NR	4 @ 35	NR[l]	NR	NR
	6	NR	NR	NR	NR	5 @ 48	NR	NR	NR	5 @ 36	NR	NR	NR
7	4	NR	NR	NR	NR	NR	NR	NR	NR	NR	NR	NR	NR
	5	NR	NR	NR	NR	NR	NR	NR	NR	5 @ 47	NR	NR	NR
	6	NR	NR	NR	NR	5 @ 42	NR	NR	NR	6 @ 43	5 @ 48	NR[l]	NR
	7	5 @ 46	NR	NR	NR	6 @ 42	5 @ 46	NR[l]	NR	6 @ 34	6 @ 48	NR	NR
8	4	NR	NR	NR	NR	NR	NR	NR	NR	NR	NR	NR	NR
	5	NR	NR	NR	NR	4 @ 38	NR[l]	NR	NR	5 @ 43	NR	NR	NR
	6	4 @ 37	NR[l]	NR	NR	5 @ 37	NR	NR	NR	6 @ 37	5 @ 43	NR[l]	NR
	7	5 @ 40	NR	NR	NR	6 @ 37	5 @ 41	NR[l]	NR	6 @ 34	6 @ 43	NR	NR
	8	6 @ 43	5 @ 47	NR[l]	NR	6 @ 34	6 @ 43	NR	NR	6 @ 27	6 @ 32	6 @ 44	NR
9	4	NR	NR	NR	NR	NR	NR	NR	NR	NR	NR	NR	NR
	5	NR	NR	NR	NR	4 @ 35	NR[l]	NR	NR	5 @ 40	NR	NR	NR
	6	4 @ 34	NR[l]	NR	NR	6 @ 48	NR	NR	NR	6 @ 36	6 @ 39	NR[l]	NR
	7	5 @ 36	NR	NR	NR	6 @ 34	5 @ 37	NR	NR	6 @ 33	6 @ 38	5 @ 37	NR[l]
	8	6 @ 38	5 @ 41	NR[l]	NR	6 @ 33	6 @ 38	5 @ 37	NR[l]	6 @ 24	6 @ 29	6 @ 39	4 @ 48[m]
	9	6 @ 34	6 @ 46	NR	NR	6 @ 26	6 @ 30	6 @ 41	NR	6 @ 19	6 @ 23	6 @ 30	6 @ 39
10	4	NR	NR	NR	NR	NR	NR	NR	NR	NR	NR	NR	NR
	5	NR	NR	NR	NR	4 @ 33	NR[l]	NR	NR	5 @ 38	NR	NR	NR
	6	5 @ 48	NR[l]	NR	NR	6 @ 45	NR	NR	NR	6 @ 34	5 @ 37	NR	NR
	7	6 @ 47	NR	NR	NR	6 @ 34	6 @ 48	NR	NR	6 @ 30	6 @ 35	6 @ 48	NR[l]
	8	6 @ 34	5 @ 38	NR	NR	6 @ 30	6 @ 34	6 @ 47	NR[l]	6 @ 22	6 @ 26	6 @ 35	6 @ 45[m]
	9	6 @ 34	6 @ 41	4 @ 48	NR[l]	6 @ 23	6 @ 27	6 @ 35	4 @ 48[m]	DR	6 @ 22	6 @ 27	6 @ 34
	10	6 @ 28	6 @ 33	6 @ 45	NR	DR[j]	6 @ 23	6 @ 29	6 @ 38	DR	6 @ 22	6 @ 22	6 @ 28

For SI: 1 inch = 25.4 mm; 1 foot = 304.8 mm; 1 pound per square foot per foot = 0.1571 kPa^2/m, 1 pound per square inch = 6.895 kPa.

NR = Not Required.

DR = Design Required.

a. Soil classes are in accordance with the Unified Soil Classification System. Refer to Table R405.1.

b. Table values are based on reinforcing bars with a minimum yield strength of 60,000 psi.

c. Vertical reinforcement with a yield strength of less than 60,000 psi and bars of a different size than specified in the table are permitted in accordance with Section R404.1.3.3.7.6 and Table R404.1.2(9).

d. NR indicates vertical wall reinforcement is not required, except for 6-inch nominal walls formed with stay-in-place forming systems in which case vertical reinforcement shall be No. 4@48 inches on center.

e. Allowable deflection criterion is $L/240$, where L is the unsupported height of the basement wall in inches.

f. Interpolation is not permitted.

g. Where walls will retain 4 feet or more of unbalanced backfill, they shall be laterally supported at the top and bottom before backfilling.

h. Vertical reinforcement shall be located to provide a cover of $1^1/_4$ inches measured from the inside face of the wall. The center of the steel shall not vary from the specified location by more than the greater of 10 percent of the wall thickness or $^3/_8$ inch.

i. Concrete cover for reinforcement measured from the inside face of the wall shall be not less than $^3/_4$ inch. Concrete cover for reinforcement measured from the outside face of the wall shall be not less than $1^1/_2$ inches for No. 5 bars and smaller, and not less than 2 inches for larger bars.

j. DR means design is required in accordance with the applicable building code, or in the absence of a code, in accordance with ACI 318.

k. Concrete shall have a specified compressive strength, f'_c, of not less than 2,500 psi at 28 days, unless a higher strength is required by Footnote l or m.

l. The minimum thickness is permitted to be reduced 2 inches, provided that the minimum specified compressive strength of concrete, f'_c, is 4,000 psi.

m. A plain concrete wall with a minimum nominal thickness of 12 inches is permitted, provided that the minimum specified compressive strength of concrete, f'_c, is 3,500 psi.

n. See Table R608.3 for tolerance from nominal thickness permitted for flat walls.

o. The use of this table shall be prohibited for soil classifications not shown.

TABLE R404.1.2(9)
MINIMUM SPACING FOR ALTERNATE BAR SIZE AND ALTERNATE GRADE OF STEEL[a, b, c]

BAR SPACING FROM APPLICABLE TABLE IN SECTION R404.1.3.2 (inches)	BAR SIZE FROM APPLICABLE TABLE IN SECTION R404.1.3.2														
	#4					#5					#6				
	Alternate bar size and alternate grade of steel desired														
	Grade 60		Grade 40			Grade 60		Grade 40			Grade 60		Grade 40		
	#5	#6	#4	#5	#6	#4	#6	#4	#5	#6	#4	#5	#4	#5	#6
	Maximum spacing for alternate bar size and alternate grade of steel (inches)														
8	12	18	5	8	12	5	11	3	5	8	4	6	2	4	5
9	14	20	6	9	13	6	13	4	6	9	4	6	3	4	6
10	16	22	7	10	15	6	14	4	7	9	5	7	3	5	7
11	17	24	7	11	16	7	16	5	7	10	5	8	3	5	7
12	19	26	8	12	18	8	17	5	8	11	5	8	4	6	8
13	20	29	9	13	19	8	18	6	9	12	6	9	4	6	9
14	22	31	9	14	21	9	20	6	9	13	6	10	4	7	9
15	23	33	10	16	22	10	21	6	10	14	7	11	5	7	10
16	25	35	11	17	23	10	23	7	11	15	7	11	5	8	11
17	26	37	11	18	25	11	24	7	11	16	8	12	5	8	11
18	28	40	12	19	26	12	26	8	12	17	8	13	5	8	12
19	29	42	13	20	28	12	27	8	13	18	9	13	6	9	13
20	31	44	13	21	29	13	28	9	13	19	9	14	6	9	13
21	33	46	14	22	31	14	30	9	14	20	10	15	6	10	14
22	34	48	15	23	32	14	31	9	15	21	10	16	7	10	15
23	36	48	15	24	34	15	33	10	15	22	10	16	7	11	15
24	37	48	16	25	35	15	34	10	16	23	11	17	7	11	16
25	39	48	17	26	37	16	35	11	17	24	11	18	8	12	17
26	40	48	17	27	38	17	37	11	17	25	12	18	8	12	17
27	42	48	18	28	40	17	38	12	18	26	12	19	8	13	18
28	43	48	19	29	41	18	40	12	19	26	13	20	8	13	19
29	45	48	19	30	43	19	41	12	19	27	13	20	9	14	19
30	47	48	20	31	44	19	43	13	20	28	14	21	9	14	20
31	48	48	21	32	45	20	44	13	21	29	14	22	9	15	21
32	48	48	21	33	47	21	45	14	21	30	15	23	10	15	21
33	48	48	22	34	48	21	47	14	22	31	15	23	10	16	22
34	48	48	23	35	48	22	48	15	23	32	15	24	10	16	23
35	48	48	23	36	48	23	48	15	23	33	16	25	11	16	23
36	48	48	24	37	48	23	48	15	24	34	16	25	11	17	24
37	48	48	25	38	48	24	48	16	25	35	17	26	11	17	25
38	48	48	25	39	48	25	48	16	25	36	17	27	12	18	25
39	48	48	26	40	48	25	48	17	26	37	18	27	12	18	26
40	48	48	27	41	48	26	48	17	27	38	18	28	12	19	27
41	48	48	27	42	48	26	48	18	27	39	19	29	12	19	27
42	48	48	28	43	48	27	48	18	28	40	19	30	13	20	28
43	48	48	29	44	48	28	48	18	29	41	20	30	13	20	29
44	48	48	29	45	48	28	48	19	29	42	20	31	13	21	29
45	48	48	30	47	48	29	48	19	30	43	20	32	14	21	30
46	48	48	31	48	48	30	48	20	31	44	21	32	14	22	31
47	48	48	31	48	48	30	48	20	31	44	21	33	14	22	31
48	48	48	32	48	48	31	48	21	32	45	22	34	15	23	32

For SI: 1 inch = 25.4 mm, 1 pound per square inch = 6.895 kPa.

a. This table is for use with tables in Section R404.1.3.2 that specify the minimum bar size and maximum spacing of vertical wall reinforcement for foundation walls and above-grade walls. Reinforcement specified in tables in Section R404.1.3.2 is based on Grade 60 steel reinforcement.

b. Bar spacing shall not exceed 48 inches on center and shall be not less than one-half the nominal wall thickness.

c. For Grade 50 steel bars (ASTM A996, Type R), use spacing for Grade 40 bars or interpolate between Grades 40 and 60.

R404.1.3.1 Concrete cross section. Concrete walls constructed in accordance with this code shall comply with the shapes and minimum concrete cross-sectional dimensions required by Table R608.3. Other types of forming systems resulting in concrete walls not in compliance with this section and Table R608.3 shall be designed in accordance with ACI 318.

R404.1.3.2 Reinforcement for foundation walls. Concrete foundation walls shall be laterally supported at the top and bottom. Horizontal reinforcement shall be provided in accordance with Table R404.1.2(1). Vertical reinforcement shall be provided in accordance with Table R404.1.2(2), R404.1.2(3), R404.1.2(4), R404.1.2(5), R404.1.2(6), R404.1.2(7) or R404.1.2(8). Vertical reinforcement for flat basement walls retaining 4 feet (1219 mm) or more of unbalanced backfill is permitted to be determined in accordance with Table R404.1.2(9). For basement walls supporting above-grade concrete walls, vertical reinforcement shall be the greater of that required by Tables R404.1.2(2) through R404.1.2(8) or by Section R608.6 for the above-grade wall. In buildings assigned to Seismic Design Category D_0, D_1 or D_2, concrete foundation walls shall also comply with Section R404.1.4.2.

R404.1.3.2.1 Concrete foundation stem walls supporting above-grade concrete walls. Foundation stem walls that support above-grade concrete walls shall be designed and constructed in accordance with this section.

1. Stem walls not laterally supported at top. Concrete stem walls that are not monolithic with slabs-on-ground or are not otherwise laterally supported by slabs-on-ground shall comply with this section. Where unbalanced backfill retained by the stem wall is less than or equal to 18 inches (457 mm), the stem wall and above-grade wall it supports shall be provided with vertical reinforcement in accordance with Section R608.6 and Table R608.6(1), R608.6(2) or R608.6(3) for above-grade walls. Where unbalanced backfill retained by the stem wall is greater than 18 inches (457 mm), the stem wall and above-grade wall it supports shall be provided with vertical reinforcement in accordance with Section R608.6 and Table R608.6(4).
2. Stem walls laterally supported at top. Concrete stem walls that are monolithic with slabs-on-ground or are otherwise laterally supported by slabs-on-ground shall be vertically reinforced in accordance with Section R608.6 and Table R608.6(1), R608.6(2) or R608.6(3) for above-grade walls. Where the unbalanced backfill retained by the stem wall is greater than 18 inches (457 mm), the connection between the stem wall and the slab-on-ground, and the portion of the slab-on-ground providing lateral support for the wall shall be designed in accordance with PCA 100 or with accepted engineering practice. Where the unbalanced backfill retained by the stem wall is greater than 18 inches (457 mm), the minimum nominal thickness of the wall shall be 6 inches (152 mm).

R404.1.3.2.2 Concrete foundation stem walls supporting light-frame above-grade walls. Concrete foundation stem walls that support light-frame above-grade walls shall be designed and constructed in accordance with this section.

1. Stem walls not laterally supported at top. Concrete stem walls that are not monolithic with slabs-on-ground or are not otherwise laterally supported by slabs-on-ground and retain 48 inches (1219 mm) or less of unbalanced fill, measured from the top of the wall, shall be constructed in accordance with Section R404.1.3. Foundation stem walls that retain more than 48 inches (1219 mm) of unbalanced fill, measured from the top of the wall, shall be designed in accordance with Sections R404.1.4 and R404.4.
2. Stem walls laterally supported at top. Concrete stem walls that are monolithic with slabs-on-ground or are otherwise laterally supported by slabs-on-ground shall be constructed in accordance with Section R404.1.3. Where the unbalanced backfill retained by the stem wall is greater than 48 inches (1219 mm), the connection between the stem wall and the slab-on-ground, and the portion of the slab-on-ground providing lateral support for the wall, shall be designed in accordance with PCA 100 or in accordance with accepted engineering practice.

R404.1.3.3 Concrete, materials for concrete, and forms. Materials used in concrete, the concrete itself and forms shall conform to requirements of this section or ACI 318.

R404.1.3.3.1 Compressive strength. The minimum specified compressive strength of concrete, f'_c, shall comply with Section R402.2 and shall be not less than 2,500 psi (17.2 MPa) at 28 days in buildings assigned to Seismic Design Category A, B or C and 3000 psi (20.5 MPa) in buildings assigned to Seismic Design Category D_0, D_1 or D_2.

R404.1.3.3.2 Concrete mixing and delivery. Mixing and delivery of concrete shall comply with ASTM C94 or ASTM C685.

R404.1.3.3.3 Maximum aggregate size. The nominal maximum size of coarse aggregate shall not exceed one-fifth the narrowest distance between sides of forms, or three-fourths the clear spacing between reinforcing bars or between a bar and the side of the form.

Exception: Where approved, these limitations shall not apply where removable forms are used and workability and methods of consolidation permit concrete to be placed without honeycombs or voids.

R404.1.3.3.4 Proportioning and slump of concrete. Proportions of materials for concrete shall be established to provide workability and consistency to permit concrete to be worked readily into forms and around reinforcement under conditions of placement to be employed, without segregation or excessive bleeding. Slump of concrete placed in removable forms shall not exceed 6 inches (152 mm).

Exception: Where approved, the slump is permitted to exceed 6 inches (152 mm) for concrete mixtures that are resistant to segregation, and are in accordance with the form manufacturer's recommendations.

Slump of concrete placed in stay-in-place forms shall exceed 6 inches (152 mm). Slump of concrete shall be determined in accordance with ASTM C143.

R404.1.3.3.5 Consolidation of concrete. Concrete shall be consolidated by suitable means during placement and shall be worked around embedded items and reinforcement and into corners of forms. Where stay-in-place forms are used, concrete shall be consolidated by internal vibration.

Exception: Where approved for concrete to be placed in stay-in-place forms, self-consolidating concrete mixtures with slumps equal to or greater than 8 inches (203 mm) that are specifically designed for placement without internal vibration need not be internally vibrated.

R404.1.3.3.6 Form materials and form ties. Forms shall be made of wood, steel, aluminum, plastic, a composite of cement and foam insulation, a composite of cement and wood chips, or other approved material suitable for supporting and containing concrete. Forms shall provide sufficient strength to contain concrete during the concrete placement operation.

Form ties shall be steel, solid plastic, foam plastic, a composite of cement and wood chips, a composite of cement and foam plastic, or other suitable material capable of resisting the forces created by fluid pressure of fresh concrete.

R404.1.3.3.6.1 Stay-in-place forms. Stay-in-place concrete forms shall comply with this section.

1. Surface burning characteristics. The flame-spread index and smoke-developed index of forming material, other than foam plastic, left exposed on the interior shall comply with Section R302. The surface burning characteristics of foam plastic used in insulating concrete forms shall comply with Section R316.3.
2. Interior covering. Stay-in-place forms constructed of rigid foam plastic shall be protected on the interior of the building as required by Section R316. Where gypsum board is used to protect the foam plastic, it shall be installed with a mechanical fastening system. Use of adhesives in addition to mechanical fasteners is permitted.
3. Exterior wall covering. Stay-in-place forms constructed of rigid foam plastics shall be protected from sunlight and physical damage by the application of an approved exterior wall covering complying with this code. Exterior surfaces of other stay-in-place forming systems shall be protected in accordance with this code.
4. Termite protection. In areas where the probability of termite infestation is "very heavy" as indicated by Table R301.2(1) or Figure R301.2(7), foam plastic insulation shall be permitted below grade on foundation walls in accordance with Section R318.4.
5. Flat ICF wall system forms shall conform to ASTM E2634.

R404.1.3.3.7 Reinforcement.

R404.1.3.3.7.1 Steel reinforcement. Steel reinforcement shall comply with the requirements of ASTM A615, A706, or A996. ASTM A996 bars produced from rail steel shall be Type R. In buildings assigned to Seismic Design Category A, B or C, the minimum yield strength of reinforcing steel shall be 40,000 psi (Grade 40) (276 MPa). In buildings assigned to Seismic Design Category D_0, D_1 or D_2, reinforcing steel shall comply with the requirements of ASTM A706 for low-alloy steel with a minimum yield strength of 60,000 psi (Grade 60) (414 MPa).

R404.1.3.3.7.2 Location of reinforcement in wall. The center of vertical reinforcement in *basement* walls determined from Tables R404.1.2(2) through R404.1.2(7) shall be located at the centerline of the wall. Vertical reinforce-

ment in basement walls determined from Table R404.1.2(8) shall be located to provide a maximum cover of $1^1/_4$ inches (32 mm) measured from the inside face of the wall. Regardless of the table used to determine vertical wall reinforcement, the center of the steel shall not vary from the specified location by more than the greater of 10 percent of the wall thickness and $^3/_8$ inch (10 mm). Horizontal and vertical reinforcement shall be located in foundation walls to provide the minimum cover required by Section R404.1.3.3.7.4.

R404.1.3.3.7.3 Wall openings. Vertical wall reinforcement required by Section R404.1.3.2 that is interrupted by wall openings shall have additional vertical reinforcement of the same size placed within 12 inches (305 mm) of each side of the opening.

R404.1.3.3.7.4 Support and cover. Reinforcement shall be secured in the proper location in the forms with tie wire or other bar support system to prevent displacement during the concrete placement operation. Steel reinforcement in concrete cast against the earth shall have a minimum cover of 3 inches (75 mm). Minimum cover for reinforcement in concrete cast in removable forms that will be exposed to the earth or weather shall be $1^1/_2$ inches (38 mm) for No. 5 bars and smaller, and 2 inches (50 mm) for No. 6 bars and larger. For concrete cast in removable forms that will not be exposed to the earth or weather, and for concrete cast in stay-in-place forms, minimum cover shall be $^3/_4$ inch (19 mm). The minus tolerance for cover shall not exceed the smaller of one-third the required cover or $^3/_8$ inch (10 mm).

R404.1.3.3.7.5 Lap splices. Vertical and horizontal wall reinforcement shall be the longest lengths practical. Where splices are necessary in reinforcement, the length of lap splice shall be in accordance with Table R608.5.4.(1) and Figure R608.5.4(1). The maximum gap between noncontact parallel bars at a lap splice shall not exceed the smaller of one-fifth the required lap length and 6 inches (152 mm) [See Figure R608.5.4(1)].

R404.1.3.3.7.6 Alternate grade of reinforcement and spacing. Where tables in Section R404.1.3.2 specify vertical wall reinforcement based on minimum bar size and maximum spacing, which are based on Grade 60 (414 MPa) steel reinforcement, different size bars or bars made from a different grade of steel are permitted provided that an equivalent area of steel per linear foot of wall is provided. Use of Table R404.1.2(9) is permitted to determine the maximum bar spacing for different bar sizes than specified in the tables or bars made from a different grade of steel. Bars shall not be spaced less than one-half the wall thickness, or more than 48 inches (1219 mm) on center.

R404.1.3.3.7.7 Standard hooks. Where reinforcement is required by this code to terminate with a standard hook, the hook shall comply with Section R608.5.4.5 and Figure R608.5.4(3).

R404.1.3.3.7.8 Construction joint reinforcement. Construction joints in foundation walls shall be made and located to not impair the strength of the wall. Construction joints in plain concrete walls, including walls required to have not less than No. 4 bars at 48 inches (1219 mm) on center by Sections R404.1.3.2 and R404.1.4.2, shall be located at points of lateral support, and not fewer than one No. 4 bar shall extend across the construction joint at a spacing not to exceed 24 inches (610 mm) on center. Construction joint reinforcement shall have not less than 12 inches (305 mm) embedment on both sides of the joint. Construction joints in reinforced concrete walls shall be located in the middle third of the span between lateral supports, or located and constructed as required for joints in plain concrete walls.

Exception: Use of vertical wall reinforcement required by this code is permitted in lieu of construction joint reinforcement provided that the spacing does not exceed 24 inches (610 mm), or the combination of wall reinforcement and No. 4 bars described in this section does not exceed 24 inches (610 mm).

R404.1.3.3.8 Exterior wall coverings. Requirements for installation of masonry veneer, stucco and other wall coverings on the exterior of concrete walls and other construction details not covered in this section shall comply with the requirements of this code.

R404.1.3.4 Requirements for Seismic Design Category C. Concrete foundation walls supporting above-grade concrete walls in townhouses assigned to Seismic Design Category C shall comply with ACI 318, ACI 332 or PCA 100 (see Section R404.1.3).

R404.1.4 Seismic Design Category D_0, D_1 or D_2.

R404.1.4.1 Masonry foundation walls. In buildings assigned to Seismic Design Category D_0, D_1 or D_2, as established in Table R301.2(1), masonry foundation walls shall comply with this section. In addition to the requirements of Table R404.1.1(1), plain masonry foundation walls shall comply with the following:

1. Wall height shall not exceed 8 feet (2438 mm).
2. Unbalanced backfill height shall not exceed 4 feet (1219 mm).
3. Minimum nominal thickness for plain masonry foundation walls shall be 8 inches (203 mm).
4. Masonry stem walls shall have a minimum vertical reinforcement of one No. 4 (No. 13) bar located not greater than 4 feet (1219 mm) on center in grouted cells. Vertical reinforcement shall be tied to the horizontal reinforcement in the footings.

Foundation walls, supporting more than 4 feet (1219 mm) of unbalanced backfill or exceeding 8 feet (2438 mm) in height shall be constructed in accordance with Table R404.1.1(2), R404.1.1(3) or R404.1.1(4). Masonry foundation walls shall have two No. 4 (No. 13) horizontal bars located in the upper 12 inches (305 mm) of the wall.

R404.1.4.2 Concrete foundation walls. In buildings assigned to Seismic Design Category D_0, D_1 or D_2, as established in Table R301.2(1), concrete foundation walls that support light-frame walls shall comply with this section, and concrete foundation walls that support above-grade concrete walls shall comply with ACI 318, ACI 332 or PCA 100 (see Section R404.1.3). In addition to the horizontal reinforcement required by Table R404.1.2(1), plain concrete walls supporting light-frame walls shall comply with the following:

1. Wall height shall not exceed 8 feet (2438 mm).
2. Unbalanced backfill height shall not exceed 4 feet (1219 mm).
3. Minimum thickness for plain concrete foundation walls shall be 7.5 inches (191 mm) except that 6 inches (152 mm) is permitted where the maximum wall height is 4 feet, 6 inches (1372 mm).

Foundation walls less than 7.5 inches (191 mm) in thickness, supporting more than 4 feet (1219 mm) of unbalanced backfill or exceeding 8 feet (2438 mm) in height shall be provided with horizontal reinforcement in accordance with Table R404.1.2(1), and vertical reinforcement in accordance with Table R404.1.2(2), R404.1.2(3), R404.1.2(4), R404.1.2(5), R404.1.2(6), R404.1.2(7) or R404.1.2(8). Where Tables R404.1.2(2) through R404.1.2(8) permit plain concrete walls, not less than No. 4 (No. 13) vertical bars at a spacing not exceeding 48 inches (1219 mm) shall be provided.

R404.1.5 Foundation wall thickness based on walls supported. The thickness of masonry or concrete foundation walls shall be not less than that required by Section R404.1.5.1 or R404.1.5.2, respectively.

R404.1.5.1 Masonry wall thickness. Masonry foundation walls shall be not less than the thickness of the wall supported, except that masonry foundation walls of not less than 8-inch (203 mm) nominal thickness shall be permitted under brick veneered frame walls and under 10-inch-wide (254 mm) cavity walls where the total height of the wall supported, including gables, is not more than 20 feet (6096 mm), provided that the requirements of Section R404.1.1 are met.

R404.1.5.2 Concrete wall thickness. The thickness of concrete foundation walls shall be equal to or greater than the thickness of the wall in the *story* above. Concrete foundation walls with corbels, brackets or other projections built into the wall for support of masonry veneer or other purposes are not within the scope of the tables in this section.

Where a concrete foundation wall is reduced in thickness to provide a shelf for the support of masonry veneer, the reduced thickness shall be equal to or greater than the thickness of the wall in the *story* above. Vertical reinforcement for the foundation wall shall be based on Table R404.1.2(8) and located in the wall as required by Section R404.1.3.3.7.2 where that table is used. Vertical reinforcement shall be based on the thickness of the thinner portion of the wall.

Exception: Where the height of the reduced thickness portion measured to the underside of the floor assembly or sill plate above is less than or equal to 24 inches (610 mm) and the reduction in thickness does not exceed 4 inches (102 mm), the vertical reinforcement is permitted to be based on the thicker portion of the wall.

R404.1.5.3 Pier and curtain wall foundations. Use of pier and curtain wall foundations shall be permitted to support light-frame construction not more than two stories in height, provided that the following requirements are met:

1. All load-bearing walls shall be placed on continuous concrete footings placed integrally with the exterior wall footings.
2. The minimum actual thickness of a load-bearing masonry wall shall be not less than 4 inches (102 mm) nominal or $3^3/_8$ inches (92 mm) actual thickness, and shall be bonded integrally with piers spaced in accordance with Section R606.6.4.
3. Piers shall be constructed in accordance with Sections R606.7 and R606.7.1, and shall be bonded into the load-bearing masonry wall in accordance with Section R606.13.1 or R606.13.1.1.
4. The maximum height of a 4-inch (102 mm) load-bearing masonry foundation wall supporting wood-frame walls and floors shall be not more than 4 feet (1219 mm).
5. Anchorage shall be in accordance with Section R403.1.6, Figure R404.1.5(1), or as specified by engineered design accepted by the building official.
6. The unbalanced fill for 4-inch (102 mm) foundation walls shall not exceed 24 inches (610 mm) for solid masonry or 12 inches (305 mm) for hollow masonry.
7. In Seismic Design Categories D_0, D_1 and D_2, prescriptive reinforcement shall be provided in the horizontal and vertical direction. Provide minimum horizontal joint reinforcement of two No. 9 gage wires spaced not less than 6 inches (152 mm) or one $^1/_4$-inch-diameter (6.4 mm) wire at 10 inches (254 mm) on center vertically. Provide minimum vertical reinforcement of one No. 4 bar at 48 inches (1220 mm) on center horizontally grouted in place.

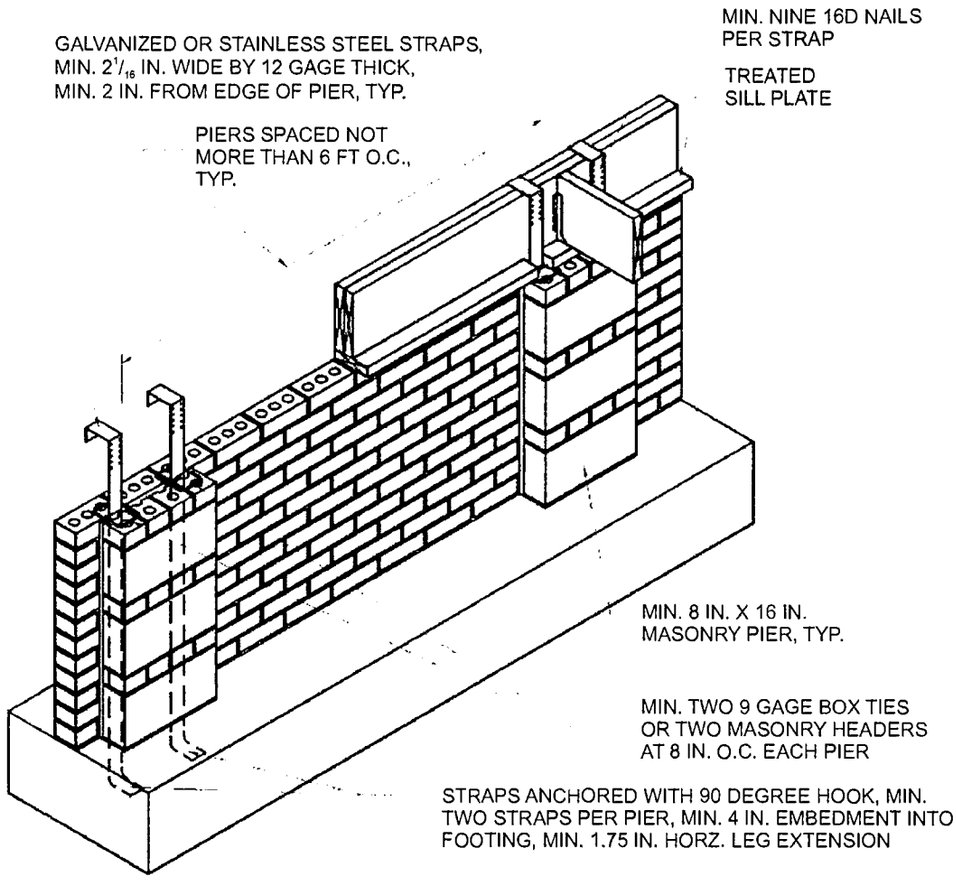

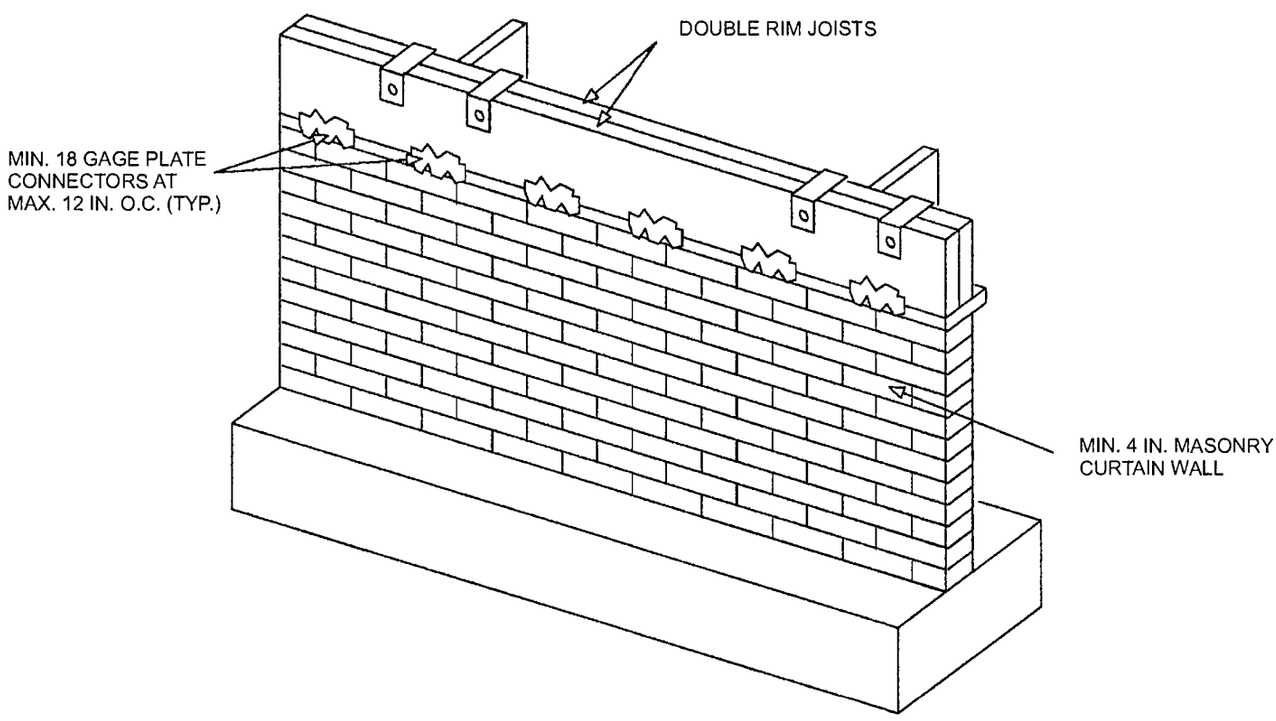

For SI: 1 inch = 25.4 mm, 1 foot = 304.8 mm, 1 degree = 0.0175 rad.

FIGURE R404.1.5(1)
FOUNDATION WALL CLAY MASONRY CURTAIN WALL WITH CONCRETE MASONRY PIERS

R404.1.6 Height above finished grade. Concrete and masonry foundation walls shall extend above the finished grade adjacent to the foundation at all points not less than 4 inches (102 mm) where masonry veneer is used and not less than 6 inches (152 mm) elsewhere.

R404.1.7 Backfill placement. Backfill shall not be placed against the wall until the wall has sufficient strength and has been anchored to the floor above, or has been sufficiently braced to prevent damage by the backfill.

Exception: Bracing is not required for walls supporting less than 4 feet (1219 mm) of unbalanced backfill.

R404.1.8 Rubble stone masonry. Rubble stone masonry foundation walls shall have a minimum thickness of 16 inches (406 mm), shall not support an unbalanced backfill exceeding 8 feet (2438 mm) in height, shall not support a soil pressure greater than 30 pounds per square foot per foot (4.71 kPa/m), and shall not be constructed in Seismic Design Categories D_0, D_1, D_2 or townhouses in Seismic Design Category C, as established in Figure R301.2(2).

R404.1.9 Isolated masonry piers. Isolated masonry piers shall be constructed in accordance with this section and the general masonry construction requirements of Section R606. Hollow masonry piers shall have a minimum nominal thickness of 8 inches (203 mm), with a nominal height not exceeding four times the nominal thickness and a nominal length not exceeding three times the nominal thickness. Where hollow masonry units are solidly filled with concrete or grout, piers shall be permitted to have a nominal height not exceeding ten times the nominal thickness. Footings for isolated masonry piers shall be sized in accordance with Section R403.1.1.

R404.1.9.1 Pier cap. Hollow masonry piers shall be capped with 4 inches (102 mm) of solid masonry or concrete, a masonry cap block, or shall have cavities of the top course filled with concrete or grout. Where required, termite protection for the pier cap shall be provided in accordance with Section R318.

R404.1.9.2 Masonry piers supporting floor girders. Masonry piers supporting wood girders sized in accordance with Tables R602.7(1) and R602.7(2) shall be permitted in accordance with this section. Piers supporting girders for interior bearing walls shall have a minimum nominal dimension of 12 inches (305 mm) and a maximum height of 10 feet (3048 mm) from top of footing to bottom of sill plate or girder. Piers supporting girders for exterior bearing walls shall have a minimum nominal dimension of 12 inches (305 mm) and a maximum height of 4 feet (1220 mm) from top of footing to bottom of sill plate or girder. Girders and sill plates shall be anchored to the pier or footing in accordance with Section R403.1.6 or Figure R404.1.5(1). Floor girder bearing shall be in accordance with Section R502.6.

R404.1.9.3 Masonry piers supporting braced wall panels. Masonry piers supporting braced wall panels shall be designed in accordance with accepted engineering practice.

R404.1.9.4 Seismic design of masonry piers. Masonry piers in dwellings located in Seismic Design Category D_0, D_1 or D_2, and townhouses in Seismic Design Category C, shall be designed in accordance with accepted engineering practice.

R404.1.9.5 Masonry piers in flood hazard areas. Masonry piers for dwellings in flood hazard areas shall be designed in accordance with Section R322.

R404.2 Wood foundation walls. Wood foundation walls shall be constructed in accordance with the provisions of Sections R404.2.1 through R404.2.6 and with the details shown in Figures R403.1(2) and R403.1(3).

R404.2.1 Identification. Load-bearing lumber shall be identified by the grade mark of a lumber grading or inspection agency that has been approved by an accreditation body that complies with DOC PS 20. In lieu of a grade mark, a certificate of inspection issued by a lumber grading or inspection agency meeting the requirements of this section shall be accepted. Wood structural panels shall conform to DOC PS 1 or DOC PS 2 and shall be identified by a grade mark or certificate of inspection issued by an approved agency.

R404.2.2 Stud size. The studs used in foundation walls shall be 2-inch by 6-inch (51 mm by 152 mm) members. Where spaced 16 inches (406 mm) on center, a wood species with an F_b value of not less than 1,250 pounds per square inch (8619 kPa) as listed in ANSI AWC NDS shall be used. Where spaced 12 inches (305 mm) on center, an F_b of not less than 875 psi (6033 kPa) shall be required.

R404.2.3 Height of backfill. For wood foundations that are not designed and installed in accordance with AWC PWF, the height of backfill against a foundation wall shall not exceed 4 feet (1219 mm). Where the height of fill is more than 12 inches (305 mm) above the interior grade of a crawl space or floor of a basement, the thickness of the plywood sheathing shall meet the requirements of Table R404.2.3.

R404.2.4 Backfilling. Wood foundation walls shall not be backfilled until the basement floor and first floor have been constructed or the walls have been braced. For crawl space construction, backfill or bracing shall be installed on the interior of the walls prior to placing backfill on the exterior.

R404.2.5 Drainage and dampproofing. Wood foundation basements shall be drained and dampproofed in accordance with Sections R405 and R406, respectively.

R404.2.6 Fastening. Wood structural panel foundation wall sheathing shall be attached to framing in accordance with Table R602.3(1) and Section R402.1.1.

R404.3 Wood sill plates. Wood sill plates shall be not less than 2-inch by 4-inch (51 mm by 102 mm) nominal lumber. Sill plate anchorage shall be in accordance with Sections R403.1.6 and R602.11.

R404.4 Retaining walls. Retaining walls that are not laterally supported at the top and that retain in excess of 48 inches (1219 mm) of unbalanced fill, or retaining walls exceeding 24 inches (610 mm) in height that resist lateral loads in addition to soil, shall be designed in accordance with accepted engi-

TABLE R404.2.3
PLYWOOD GRADE AND THICKNESS FOR WOOD FOUNDATION CONSTRUCTION (30 pcf equivalent-fluid weight soil pressure)

HEIGHT OF FILL (inches)	STUD SPACING (inches)	FACE GRAIN ACROSS STUDS			FACE GRAIN PARALLEL TO STUDS		
		Grade[a]	Minimum thickness (Inches)	Span rating	Grade[a]	Minimum thickness (inches)[b, c]	Span rating
24	12	B	$^{15}/_{32}$	32/16	A	$^{15}/_{32}$	32/16
					B	$^{15}/_{32}$[c]	32/16
	16	B	$^{15}/_{32}$	32/16	A	$^{15}/_{32}$[c]	32/16
					B	$^{19}/_{32}$[c] (4, 5 ply)	40/20
36	12	B	$^{15}/_{32}$	32/16	A	$^{15}/_{32}$	32/16
					B	$^{15}/_{32}$[c] (4, 5 ply)	32/16
					B	$^{19}/_{32}$ (4, 5 ply)	40/20
	16	B	$^{15}/_{32}$[c]	32/16	A	$^{19}/_{32}$	40/20
					B	$^{23}/_{32}$	48/24
48	12	B	$^{15}/_{32}$	32/16	A	$^{15}/_{32}$[c]	32/16
					B	$^{19}/_{32}$[c] (4, 5 ply)	40/20
	16	B	$^{19}/_{32}$	40/20	A	$^{19}/_{32}$[c]	40/20
					A	$^{23}/_{32}$	48/24

For SI: 1 inch = 25.4 mm, 1 foot = 304.8 mm, 1 pound per cubic foot = 0.1572 kN/m^3.

a. Plywood shall be of the following minimum grades in accordance with DOC PS 1 or DOC PS 2:
   1. DOC PS 1 Plywood grades marked:
      1.1. Structural I C-D (Exposure 1).
      1.2. C-D (Exposure 1).
   2. DOC PS 2 Plywood grades marked:
      2.1. Structural I Sheathing (Exposure 1).
      2.2. Sheathing (Exposure 1).
   3. Where a major portion of the wall is exposed above ground and a better appearance is desired, the following plywood grades marked exterior are suitable:
      3.1. Structural I A-C, Structural I B-C or Structural I C-C (Plugged) in accordance with DOC PS 1.
      3.2. A-C Group 1, B-C Group 1, C-C (Plugged) Group 1 or MDO Group 1 in accordance with DOC PS 1.
      3.3. Single Floor in accordance with DOC PS 1 or DOC PS 2.

b. Minimum thickness $^{15}/_{32}$ inch, except crawl space sheathing shall have not less than $^{3}/_{8}$ inch for face grain across studs 16 inches on center and maximum 2-foot depth of unequal fill.

c. For this fill height, thickness and grade combination, panels that are continuous over less than three spans (across less than three stud spacings) require blocking 16 inches above the bottom plate. Offset adjacent blocks and fasten through studs with two 16d corrosion-resistant nails at each end.

neering practice to ensure stability against overturning, sliding, excessive foundation pressure and water uplift. Retaining walls shall be designed for a safety factor of 1.5 against lateral sliding and overturning. This section shall not apply to foundation walls supporting buildings.

R404.5 Precast concrete foundation walls.

R404.5.1 Design. Precast concrete foundation walls shall be designed in accordance with accepted engineering practice. The design and manufacture of precast concrete foundation wall panels shall comply with the materials requirements of Section R402.3 or ACI 318. The panel design drawings shall be prepared by a registered design professional.

R404.5.2 Precast concrete foundation design drawings. Precast concrete foundation wall design drawings shall be submitted to the building official and approved prior to installation. Drawings shall include, at a minimum, the following information:

1. Design loading as applicable.
2. Footing design and material.
3. Concentrated loads and their points of application.
4. Soil bearing capacity.
5. Maximum allowable total uniform load.
6. Seismic design category.
7. Basic wind speed.

R404.5.3 Identification. Precast concrete foundation wall panels shall be identified by a certificate of inspection label issued by an approved third-party inspection agency.

SECTION R405
FOUNDATION DRAINAGE

R405.1 Concrete or masonry foundations. Drains shall be provided around concrete or masonry foundations that retain earth and enclose habitable or usable spaces located below grade. Drainage tiles, gravel or crushed stone drains, perforated pipe or other approved systems or materials shall be installed at or below the top of the footing or below the bottom of the slab and shall discharge by gravity or mechanical means into an approved drainage system. Gravel or crushed stone

drains shall extend not less than 1 foot (305 mm) beyond the outside edge of the footing and 6 inches (152 mm) above the top of the footing and be covered with an approved filter membrane material. The top of open joints of drain tiles shall be protected with strips of building paper. Except where otherwise recommended by the drain manufacturer, perforated drains shall be surrounded with an approved filter membrane or the filter membrane shall cover the washed gravel or crushed rock covering the drain. Drainage tiles or perforated pipe shall be placed on not less than 2 inches (51 mm) of washed gravel or crushed rock not less than one sieve size larger than the tile joint opening or perforation and covered with not less than 6 inches (152 mm) of the same material.

Exception: A drainage system is not required where the foundation is installed on well-drained ground or sand-gravel mixture soils according to the Unified Soil Classification System, Group I soils, as detailed in Table R405.1.

R405.1.1 Precast concrete foundation. Precast concrete walls that retain earth and enclose habitable or useable space located below-grade that rest on crushed stone footings shall have a perforated drainage pipe installed below the base of the wall on either the interior or exterior side of the wall, not less than 1 foot (305 mm) beyond the edge of the wall. If the exterior drainage pipe is used, an approved filter membrane material shall cover the pipe. The drainage system shall discharge into an approved sewer system or to daylight.

R405.2 Wood foundations. Wood foundations enclosing habitable or usable spaces located below grade shall be adequately drained in accordance with Sections R405.2.1 through R405.2.3.

R405.2.1 Base. A porous layer of gravel, crushed stone or coarse sand shall be placed to a minimum thickness of 4 inches (102 mm) under the basement floor. Provision shall be made for automatic draining of this layer and the gravel or crushed stone wall footings.

R405.2.2 Vapor retarder. A 6-mil-thick (0.15 mm) polyethylene vapor retarder shall be applied over the porous layer with the basement floor constructed over the polyethylene.

R405.2.3 Drainage system. In other than Group I soils, a sump shall be provided to drain the porous layer and footings. The sump shall be not less than 24 inches (610 mm) in diameter or 20 inches square (0.0129 m^2), shall extend not less than 24 inches (610 mm) below the bottom of the basement floor and shall be capable of positive gravity or mechanical drainage to remove any accumulated water. The drainage system shall discharge into an approved sewer system or to daylight.

TABLE R405.1
PROPERTIES OF SOILS CLASSIFIED ACCORDING TO THE UNIFIED SOIL CLASSIFICATION SYSTEM

SOIL GROUP	UNIFIED SOIL CLASSIFICATION SYSTEM SYMBOL	SOIL DESCRIPTION	DRAINAGE CHARACTERISTICS[a]	FROST HEAVE POTENTIAL	VOLUME CHANGE POTENTIAL EXPANSION[b]
Group I	GW	Well-graded gravels, gravel sand mixtures, little or no fines	Good	Low	Low
	GP	Poorly graded gravels or gravel sand mixtures, little or no fines	Good	Low	Low
	SW	Well-graded sands, gravelly sands, little or no fines	Good	Low	Low
	SP	Poorly graded sands or gravelly sands, little or no fines	Good	Low	Low
	GM	Silty gravels, gravel-sand-silt mixtures	Good	Medium	Low
	SM	Silty sand, sand-silt mixtures	Good	Medium	Low
Group II	GC	Clayey gravels, gravel-sand-clay mixtures	Medium	Medium	Low
	SC	Clayey sands, sand-clay mixture	Medium	Medium	Low
	ML	Inorganic silts and very fine sands, rock flour, silty or clayey fine sands or clayey silts with slight plasticity	Medium	High	Low
	CL	Inorganic clays of low to medium plasticity, gravelly clays, sandy clays, silty clays, lean clays	Medium	Medium	Medium to Low
Group III	CH	Inorganic clays of high plasticity, fat clays	Poor	Medium	High
	MH	Inorganic silts, micaceous or diatomaceous fine sandy or silty soils, elastic silts	Poor	High	High
Group IV	OL	Organic silts and organic silty clays of low plasticity	Poor	Medium	Medium
	OH	Organic clays of medium to high plasticity, organic silts	Unsatisfactory	Medium	High
	Pt	Peat and other highly organic soils	Unsatisfactory	Medium	High

For SI: 1 inch = 25.4 mm.

a. The percolation rate for good drainage is over 4 inches per hour, medium drainage is 2 inches to 4 inches per hour, and poor is less than 2 inches per hour.

b. Soils with a low potential expansion typically have a plasticity index (PI) of 0 to 15, soils with a medium potential expansion have a PI of 10 to 35 and soils with a high potential expansion have a PI greater than 20.

SECTION R406
FOUNDATION WATERPROOFING AND DAMPPROOFING

R406.1 Concrete and masonry foundation dampproofing. Except where required by Section R406.2 to be waterproofed, foundation walls that retain earth and enclose interior spaces and floors below grade shall be dampproofed from the higher of (a) the top of the footing or (b) 6 inches (152 mm) below the top of the basement floor, to the finished grade. Masonry walls shall have not less than $^3/_8$-inch (9.5 mm) Portland cement parging applied to the exterior of the wall. The parging shall be dampproofed in accordance with one of the following:

1. Bituminous coating.
2. Three pounds per square yard (1.63 kg/m^2) of acrylic modified cement.
3. One-eighth-inch (3.2 mm) coat of surface-bonding cement complying with ASTM C887.
4. Any material permitted for waterproofing in Section R406.2.
5. Other approved methods or materials.

Exception: Parging of unit masonry walls is not required where a material is approved for direct application to the masonry.

Concrete walls shall be dampproofed by applying any one of the listed dampproofing materials or any one of the waterproofing materials listed in Section R406.2 to the exterior of the wall.

R406.2 Concrete and masonry foundation waterproofing. In areas where a high water table or other severe soil-water conditions are known to exist, exterior foundation walls that retain earth and enclose interior spaces and floors below grade shall be waterproofed from the higher of (a) the top of the footing or (b) 6 inches (152 mm) below the top of the basement floor, to the finished grade. Walls shall be waterproofed in accordance with one of the following:

1. Two-ply hot-mopped felts.
2. Fifty-five-pound (25 kg) roll roofing.
3. Six-mil (0.15 mm) polyvinyl chloride.
4. Six-mil (0.15 mm) polyethylene.
5. Forty-mil (1 mm) polymer-modified asphalt.
6. Sixty-mil (1.5 mm) flexible polymer cement.
7. One-eighth-inch (3 mm) cement-based, fiber-reinforced, waterproof coating.
8. Sixty-mil (1.5 mm) solvent-free liquid-applied synthetic rubber.

All joints in membrane waterproofing shall be lapped and sealed with an adhesive compatible with the membrane.

Exception: Organic-solvent-based products such as hydrocarbons, chlorinated hydrocarbons, ketones and esters shall not be used for ICF walls with expanded polystyrene form material. Use of plastic roofing cements, acrylic coatings, latex coatings, mortars and pargings to seal ICF walls is permitted. Cold-setting asphalt or hot asphalt shall conform to Type C of ASTM D449. Hot asphalt shall be applied at a temperature of less than 200°F (93°C).

R406.3 Dampproofing for wood foundations. Wood foundations enclosing habitable or usable spaces located below grade shall be dampproofed in accordance with Sections R406.3.1 through R406.3.4.

R406.3.1 Panel joint sealed. Plywood panel joints in the foundation walls shall be sealed full length with a caulking compound capable of producing a moistureproof seal under the conditions of temperature and moisture content at which it will be applied and used.

R406.3.2 Below-grade moisture barrier. A 6-mil-thick (0.15 mm) polyethylene film shall be applied over the below-grade portion of exterior foundation walls prior to backfilling. Joints in the polyethylene film shall be lapped 6 inches (152 mm) and sealed with adhesive. The top edge of the polyethylene film shall be bonded to the sheathing to form a seal. Film areas at grade level shall be protected from mechanical damage and exposure by a pressure-preservative treated lumber or plywood strip attached to the wall several inches above finished grade level and extending approximately 9 inches (229 mm) below grade. The joint between the strip and the wall shall be caulked full length prior to fastening the strip to the wall. Where approved, other coverings appropriate to the architectural treatment shall be permitted to be used. The polyethylene film shall extend down to the bottom of the wood footing plate but shall not overlap or extend into the gravel or crushed stone footing.

R406.3.3 Porous fill. The space between the excavation and the foundation wall shall be backfilled with the same material used for footings, up to a height of 1 foot (305 mm) above the footing for well-drained sites, or one-half the total backfill height for poorly drained sites. The porous fill shall be covered with strips of 30-pound (13.6 kg) asphalt paper or 6-mil (0.15 mm) polyethylene to permit water seepage while avoiding infiltration of fine soils.

R406.3.4 Backfill. The remainder of the excavated area shall be backfilled with the same type of soil as was removed during the excavation.

R406.4 Precast concrete foundation system dampproofing. Except where required by Section R406.2 to be waterproofed, precast concrete foundation walls enclosing habitable or useable spaces located below grade shall be dampproofed in accordance with Section R406.1.

R406.4.1 Panel joints sealed. Precast concrete foundation panel joints shall be sealed full height with a sealant meeting ASTM C920, Type S or M, Grade NS, Class 25, Use NT, M or A. Joint sealant shall be installed in accordance with the manufacturer's instructions.

SECTION R407
COLUMNS

R407.1 Wood column protection. Wood columns shall be protected against decay as set forth in Section R317.

R407.2 Steel column protection. All surfaces (inside and outside) of steel columns shall be given a shop coat of rust-

inhibitive paint, except for corrosion-resistant steel and steel treated with coatings to provide corrosion resistance.

R407.3 Structural requirements. The columns shall be restrained to prevent lateral displacement at the bottom end. Wood columns shall be not less in nominal size than 4 inches by 4 inches (102 mm by 102 mm). Steel columns shall be not less than 3-inch-diameter (76 mm) Schedule 40 pipe manufactured in accordance with ASTM A53 Grade B or approved equivalent.

Exception: In Seismic Design Categories A, B and C, columns not more than 48 inches (1219 mm) in height on a pier or footing are exempt from the bottom end lateral displacement requirement within under-floor areas enclosed by a continuous foundation.

SECTION R408
UNDER-FLOOR SPACE

R408.1 Ventilation. The under-floor space between the bottom of the floor joists and the earth under any building (except space occupied by a basement) shall have ventilation openings through foundation walls or exterior walls. The minimum net area of ventilation openings shall be not less than 1 square foot (0.0929 m^2) for each 150 square feet (14 m^2) of under-floor space area, unless the ground surface is covered by a Class 1 vapor retarder material. Where a Class 1 vapor retarder material is used, the minimum net area of ventilation openings shall be not less than 1 square foot (0.0929 m^2) for each 1,500 square feet (140 m^2) of under-floor space area. One such ventilating opening shall be within 3 feet (914 mm) of each corner of the building.

R408.2 Openings for under-floor ventilation. The minimum net area of ventilation openings shall be not less than 1 square foot (0.0929 m^2) for each 150 square feet (14 m^2) of under-floor area. One ventilation opening shall be within 3 feet (915 mm) of each corner of the building. Ventilation openings shall be covered for their height and width with any of the following materials provided that the least dimension of the covering shall not exceed $^1/_4$ inch (6.4 mm):

1. Perforated sheet metal plates not less than 0.070 inch (1.8 mm) thick.
2. Expanded sheet metal plates not less than 0.047 inch (1.2 mm) thick.
3. Cast-iron grill or grating.
4. Extruded load-bearing brick vents.
5. Hardware cloth of 0.035 inch (0.89 mm) wire or heavier.
6. Corrosion-resistant wire mesh, with the least dimension being $^1/_8$ inch (3.2 mm) thick.

Exception: The total area of ventilation openings shall be permitted to be reduced to $^1/_{1,500}$ of the under-floor area where the ground surface is covered with an approved Class I vapor retarder material and the required openings are placed to provide cross ventilation of the space. The installation of operable louvers shall not be prohibited.

R408.3 Unvented crawl space. Ventilation openings in under-floor spaces specified in Sections R408.1 and R408.2 shall not be required where the following items are provided:

1. Exposed earth is covered with a continuous Class I vapor retarder. Joints of the vapor retarder shall overlap by 6 inches (152 mm) and shall be sealed or taped. The edges of the vapor retarder shall extend not less than 6 inches (152 mm) up the stem wall and shall be attached and sealed to the stem wall or insulation.
2. One of the following is provided for the under-floor space:
   - 2.1. Continuously operated mechanical exhaust ventilation at a rate equal to 1 cubic foot per minute (0.47 L/s) for each 50 square feet (4.7 m^2) of crawl space floor area, including an air pathway to the common area (such as a duct or transfer grille). <
   - 2.2. Conditioned air supply sized to deliver at a rate equal to 1 cubic foot per minute (0.47 L/s) for each 50 square feet (4.7 m^2) of under-floor area, including a return air pathway to the common area (such as a duct or transfer grille). *Crawl space perimeter walls shall be insulated in accordance with the minimum insulation requirements established in the California Energy Code. Crawl space insulation shall be permanently fastened to the wall and extend downward from the floor to the finished grade level and then vertically and/or horizontally for at least an additional 24 inches (610 mm).*
   - 2.3. Plenum in existing structures complying with the *California Mechanical Code*, if under-floor space is used as a plenum.
   - 2.4. Dehumidification sized to provide 70 pints (33 liters) of moisture removal per day for every 1,000 square feet (93 m^2) of crawl space floor area.

R408.4 Access. Access shall be provided to all under-floor spaces. Access openings through the floor shall be not smaller than 18 inches by 24 inches (457 mm by 610 mm). Openings through a perimeter wall shall be not less than 16 inches by 24 inches (407 mm by 610 mm). Where any portion of the through-wall access is below grade, an areaway not less than 16 inches by 24 inches (407 mm by 610 mm) shall be provided. The bottom of the areaway shall be below the threshold of the access opening. Through wall access openings shall not be located under a door to the residence. See the *California Mechanical Code* for access requirements where mechanical equipment is located under floors.

R408.5 Removal of debris. The under-floor grade shall be cleaned of all vegetation and organic material. Wood forms used for placing concrete shall be removed before a building is occupied or used for any purpose. Construction materials shall be removed before a building is occupied or used for any purpose.

R408.6 Finished grade. The finished grade of under-floor surface shall be permitted to be located at the bottom of the footings; however, where there is evidence that the groundwater table can rise to within 6 inches (152 mm) of the finished floor at the building perimeter or where there is evidence that the surface water does not readily drain from the building site, the grade in the under-floor space shall be as high as the outside finished grade, unless an approved drainage system is provided.

R408.7 Flood resistance. For buildings located in flood hazard areas as established in Table R301.2(1):

1. Walls enclosing the under-floor space shall be provided with flood openings in accordance with Section R322.2.2.
2. The finished ground level of the under-floor space shall be equal to or higher than the outside finished ground level on at least one side.

   Exception: Under-floor spaces that meet the requirements of FEMA TB 11-1.

CALIFORNIA RESIDENTIAL CODE – MATRIX ADOPTION TABLE
CHAPTER 5 – FLOORS

(Matrix Adoption Tables are nonregulatory, intended only as an aid to the code user. See Chapter 1 for state agency authority and building applications.)

Adopting agency	BSC	BSC-CG	SFM	HCD			DSA			OSHPD						BSCC	DPH	AGR	DWR	CEC	CA	SL	SLC
				1	2	1/AC	AC	SS	SS/CC	1	1R	2	3	4	5								
Adopt entire chapter																							
Adopt entire chapter as amended (amended sections listed below)				X																			
Adopt only those sections that are listed below																							
Chapter / Section																							
R502.1.1				X																			
R502.11.1				X																			
R506.2.3.1				X																			

CHAPTER 5

FLOORS

User note:

About this chapter: *Chapter 5 provides the requirements for the design and construction of floor systems that will be capable of supporting minimum required design loads. This chapter covers wood floor framing, wood floors on the ground, cold-formed steel floor framing and concrete slabs on the ground. Allowable span tables are provided that greatly simplify the determination of joist, girder and sheathing sizes for raised floor systems of wood framing and cold-formed steel framing. This chapter also contains prescriptive requirements for wood-framed exterior decks and their attachment to the main building.*

SECTION R501
GENERAL

R501.1 Application. The provisions of this chapter shall control the design and construction of the floors for buildings, including the floors of attic spaces used to house mechanical or plumbing fixtures and equipment.

R501.2 Requirements. Floor construction shall be capable of accommodating all loads in accordance with Section R301 and of transmitting the resulting loads to the supporting structural elements.

SECTION R502
WOOD FLOOR FRAMING

R502.1 General. Wood and wood-based products used for load-supporting purposes shall conform to the applicable provisions of this section.

R502.1.1 Sawn lumber. Sawn lumber shall be identified by a grade mark of an accredited lumber grading or inspection agency and have design values certified by an accreditation body that complies with DOC PS 20. In lieu of a grade mark, a certificate of inspection issued by a lumber grading or inspection agency meeting the requirements of this section shall be accepted.

Note: See Section R301.1.1.1 for limited-density owner-built rural dwellings.

R502.1.1.1 Preservative-treated lumber. Preservative treated dimension lumber shall be identified as required by Section R317.2.

R502.1.1.2 End-jointed lumber. Approved end-jointed lumber identified by a grade mark conforming to Section R502.1.1 shall be permitted to be used interchangeably with solid-sawn members of the same species and grade. End-jointed lumber used in an assembly required elsewhere in this code to have a fire-resistance rating shall have the designation "Heat-Resistant Adhesive" or "HRA" included in its grade mark.

R502.1.2 Prefabricated wood I-joists. Structural capacities and design provisions for prefabricated wood I-joists shall be established and monitored in accordance with ASTM D5055.

R502.1.3 Structural glued laminated timbers. Glued laminated timbers shall be manufactured and identified as required in ANSI A190.1, ANSI 117 and ASTM D3737.

R502.1.4 Structural log members. Structural log members shall comply with the provisions of ICC 400.

R502.1.5 Structural composite lumber. Structural capacities for structural composite lumber shall be established and monitored in accordance with ASTM D5456.

R502.1.6 Cross-laminated timber. Cross-laminated timber shall be manufactured and identified as required by ANSI/APA PRG 320.

R502.1.7 Engineered wood rim board. Engineered wood rim boards shall conform to ANSI/APA PRR 410 or shall be evaluated in accordance with ASTM D7672. Structural capacities shall be in accordance with ANSI/APA PRR 410 or established in accordance with ASTM D7672. Rim boards conforming to ANSI/APA PRR 410 shall be marked in accordance with that standard.

R502.2 Design and construction. Floors shall be designed and constructed in accordance with the provisions of this chapter, Figure R502.2 and Sections R317 and R318 or in accordance with ANSI AWC NDS.

R502.2.1 Framing at braced wall lines. A load path for lateral forces shall be provided between floor framing and braced wall panels located above or below a floor, as specified in Section R602.10.8.

R502.2.2 Blocking and subflooring. Blocking for fastening panel edges or fixtures shall be not less than utility grade lumber. Subflooring shall be not less than utility grade lumber, No. 4 common grade boards or wood structural panels as specified in Section R503.2. Fireblocking shall be of any grade lumber.

R502.3 Allowable joist spans. Spans for floor joists shall be in accordance with Tables R502.3.1(1) and R502.3.1(2). For other grades and species and for other loading conditions, refer to the AWC STJR.

R502.3.1 Sleeping areas and attic joists. Table R502.3.1(1) shall be used to determine the maximum allowable span of floor joists that support sleeping areas and *attics* that are accessed by means of a fixed stairway in accordance with Section R311.7 provided that the design live load does not exceed 30 pounds per square foot (1.44 kPa) and the design dead load does not exceed 20 pounds per square foot (0.96 kPa). The allowable span of ceiling joists that support attics used for limited storage or no storage shall be determined in accordance with Section R802.5.

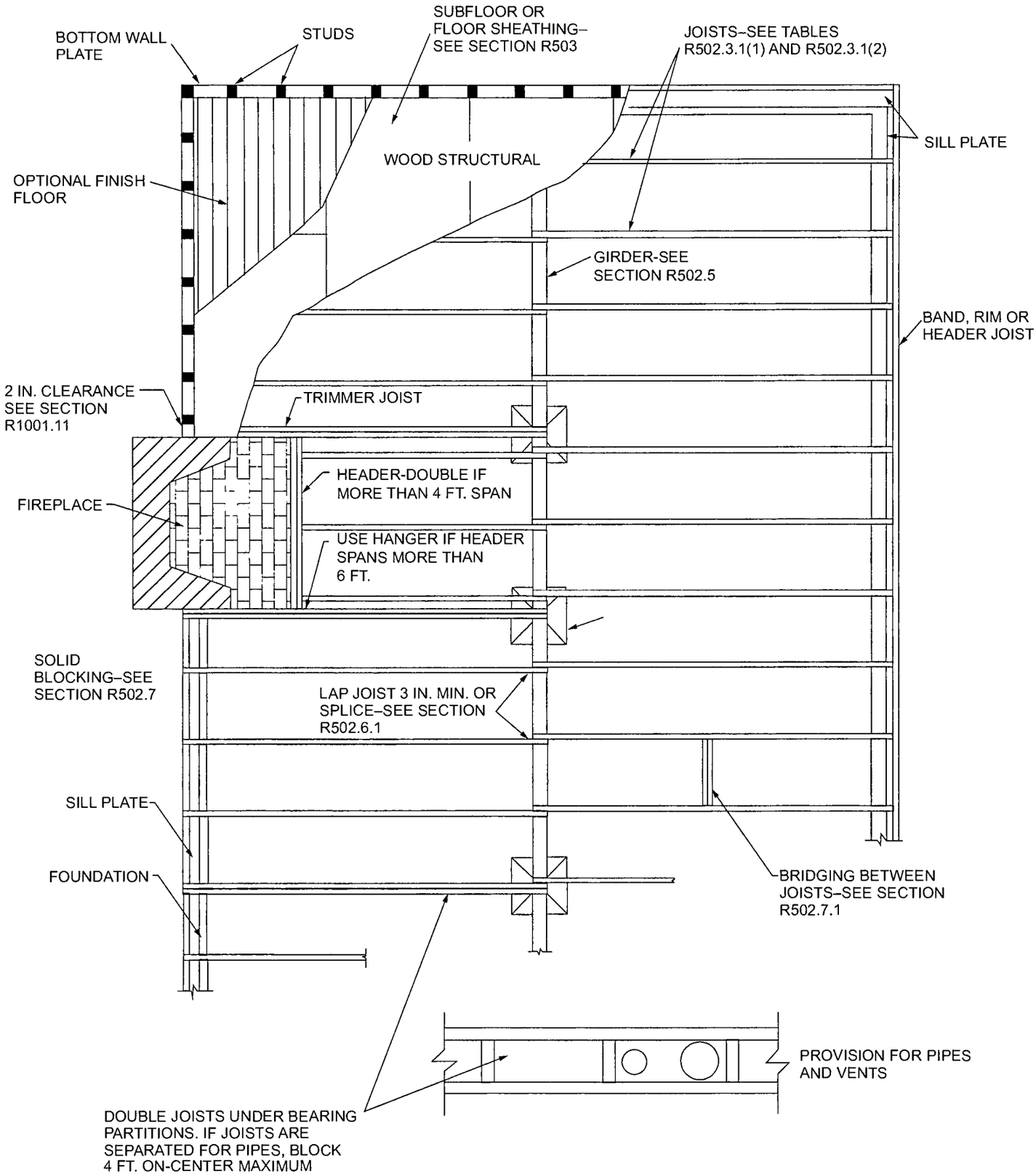

For SI: 1 inch = 25.4 mm, 1 foot = 304.8 mm.

FIGURE R502.2
FLOOR CONSTRUCTION

TABLE R502.3.1(1)
FLOOR JOIST SPANS FOR COMMON LUMBER SPECIES
(Residential sleeping areas, live load = 30 psf, L/Δ = 360)[a]

JOIST SPACING (inches)	SPECIES AND GRADE		DEAD LOAD = 10 psf				DEAD LOAD = 20 psf			
			2 × 6	2 × 8	2 × 10	2 × 12	2 × 6	2 × 8	2 × 10	2 × 12
			Maximum floor joist spans							
			(ft. - in.)	(ft. - in.)	(ft. - in.)	(ft. - in.)	(ft. - in.)	(ft. - in.)	(ft. - in.)	(ft. - in.)
12	Douglas fir-larch	SS	12-6	16-6	21-0	25-7	12-6	16-6	21-0	25-7
	Douglas fir-larch	#1	12-0	15-10	20-3	24-8	12-0	15-7	19-0	22-0
	Douglas fir-larch	#2	11-10	15-7	19-10	23-4	11-8	14-9	18-0	20-11
	Douglas fir-larch	#3	9-11	12-7	15-5	17-10	8-11	11-3	13-9	16-0
	Hem-fir	SS	11-10	15-7	19-10	24-2	11-10	15-7	19-10	24-2
	Hem-fir	#1	11-7	15-3	19-5	23-7	11-7	15-3	18-9	21-9
	Hem-fir	#2	11-0	14-6	18-6	22-6	11-0	14-4	17-6	20-4
	Hem-fir	#3	9-8	12-4	15-0	17-5	8-8	11-0	13-5	15-7
	Southern pine	SS	12-3	16-2	20-8	25-1	12-3	16-2	20-8	25-1
	Southern pine	#1	11-10	15-7	19-10	24-2	11-10	15-7	18-7	22-0
	Southern pine	#2	11-3	14-11	18-1	21-4	10-9	13-8	16-2	19-1
	Southern pine	#3	9-2	11-6	14-0	16-6	8-2	10-3	12-6	14-9
	Spruce-pine-fir	SS	11-7	15-3	19-5	23-7	11-7	15-3	19-5	23-7
	Spruce-pine-fir	#1	11-3	14-11	19-0	23-0	11-3	14-7	17-9	20-7
	Spruce-pine-fir	#2	11-3	14-11	19-0	23-0	11-3	14-7	17-9	20-7
	Spruce-pine-fir	#3	9-8	12-4	15-0	17-5	8-8	11-0	13-5	15-7
16	Douglas fir-larch	SS	11-4	15-0	19-1	23-3	11-4	15-0	19-1	23-3
	Douglas fir-larch	#1	10-11	14-5	18-5	21-4	10-8	13-6	16-5	19-1
	Douglas fir-larch	#2	10-9	14-2	17-5	20-3	10-1	12-9	15-7	18-1
	Douglas fir-larch	#3	8-7	10-11	13-4	15-5	7-8	9-9	11-11	13-10
	Hem-fir	SS	10-9	14-2	18-0	21-11	10-9	14-2	18-0	21-11
	Hem-fir	#1	10-6	13-10	17-8	21-1	10-6	13-4	16-3	18-10
	Hem-fir	#2	10-0	13-2	16-10	19-8	9-10	12-5	15-2	17-7
	Hem-fir	#3	8-5	10-8	13-0	15-1	7-6	9-6	11-8	13-6
	Southern pine	SS	11-2	14-8	18-9	22-10	11-2	14-8	18-9	22-10
	Southern pine	#1	10-9	14-2	18-0	21-4	10-9	13-9	16-1	19-1
	Southern pine	#2	10-3	13-3	15-8	18-6	9-4	11-10	14-0	16-6
	Southern pine	#3	7-11	10-0	11-1	14-4	7-1	8-11	10-10	12-10
	Spruce-pine-fir	SS	10-6	13-10	17-8	21-6	10-6	13-10	17-8	21-4
	Spruce-pine-fir	#1	10-3	13-6	17-2	19-11	9-11	12-7	15-5	17-10
	Spruce-pine-fir	#2	10-3	13-6	17-2	19-11	9-11	12-7	15-5	17-10
	Spruce-pine-fir	#3	8-5	10-8	13-0	15-1	7-6	9-6	11-8	13-6

(continued)

TABLE R502.3.1(1)—continued
FLOOR JOIST SPANS FOR COMMON LUMBER SPECIES
(Residential sleeping areas, live load = 30 psf, L/Δ = 360)[a]

JOIST SPACING (Inches)	SPECIES AND GRADE		DEAD LOAD = 10 psf				DEAD LOAD = 20 psf			
			2 × 6	2 × 8	2 × 10	2 × 12	2 × 6	2 × 8	2 × 10	2 × 12
			Maximum floor joist spans							
			(ft.- in.)	(ft. - in.)	(ft. - in.)	(ft. - in.)	(ft. - in.)	(ft. - in.)	(ft. - in.)	(ft. - in.)
19.2	Douglas fir-larch	SS	10-8	14-1	18-0	21-10	10-8	14-1	18-0	21-4
	Douglas fir-larch	#1	10-4	13-7	16-9	19-6	9-8	12-4	15-0	17-5
	Douglas fir-larch	#2	10-1	13-0	15-11	18-6	9-3	11-8	14-3	16-6
	Douglas fir-larch	#3	7-10	10-0	12-2	14-1	7-0	8-11	10-11	12-7
	Hem-fir	SS	10-1	13-4	17-0	20-8	10-1	13-4	17-0	20-7
	Hem-fir	#1	9-10	13-0	16-7	19-3	9-7	12-2	14-10	17-2
	Hem-fir	#2	9-5	12-5	15-6	17-1	8-11	11-4	13-10	16-1
	Hem-fir	#3	7-8	9-9	11-10	13-9	6-10	8-8	10-7	12-4
	Southern pine	SS	10-6	13-10	17-8	21-6	10-6	13-10	17-8	21-6
	Southern pine	#1	10-1	13-4	16-5	19-6	9-11	12-7	14-8	17-5
	Southern pine	#2	9-6	12-1	14-4	16-10	8-6	10-10	12-10	15-1
	Southern pine	#3	7-3	9-1	11-0	13-1	6-5	8-2	9-10	11-8
	Spruce-pine-fir	SS	9-10	13-0	16-7	20-2	9-10	13-0	16-7	19-6
	Spruce-pine-fir	#1	9-8	12-9	15-8	18-3	9-1	11-6	14-1	16-3
	Spruce-pine-fir	#2	9-8	12-9	15-8	18-3	9-1	11-6	14-1	16-3
	Spruce-pine-fir	#3	7-8	9-9	11-10	13-9	6-10	8-8	10-7	12-4
24	Douglas fir-larch	SS	9-11	13-1	16-8	20-3	9-11	13-1	16-5	19-1
	Douglas fir-larch	#1	9-7	12-4	15-0	17-5	8-8	11-0	13-5	15-7
	Douglas fir-larch	#2	9-3	11-8	14-3	16-6	8-3	10-5	12-9	14-9
	Douglas fir-larch	#3	7-0	8-11	10-11	12-7	6-3	8-0	9-9	11-3
	Hem-fir	SS	9-4	12-4	15-9	19-2	9-4	12-4	15-9	18-5
	Hem-fir	#1	9-2	12-1	14-10	17-2	8-7	10-10	13-3	15-5
	Hem-fir	#2	8-9	11-4	13-10	16-1	8-0	10-2	12-5	14-4
	Hem-fir	#3	6-10	8-8	10-7	12-4	6-2	7-9	9-6	11-0
	Southern pine	SS	9-9	12-10	16-5	19-11	9-9	12-10	16-5	19-8
	Southern pine	#1	9-4	12-4	14-8	17-5	8-10	11-3	13-1	15-7
	Southern pine	#2	8-6	10-10	12-10	15-1	7-7	9-8	11-5	13-6
	Southern pine	#3	6-5	8-2	9-10	11-8	5-9	7-3	8-10	10-5
	Spruce-pine-fir	SS	9-2	12-1	15-5	18-9	9-2	12-1	15-0	17-5
	Spruce-pine-fir	#1	8-11	11-6	14-1	16-3	8-1	10-3	12-7	14-7
	Spruce-pine-fir	#2	8-11	11-6	14-1	16-3	8-1	10-3	12-7	14-7
	Spruce-pine-fir	#3	6-10	8-8	10-7	12-4	6-2	7-9	9-6	11-0

For SI: 1 inch = 25.4 mm. 1 foot = 304.8 mm, 1 pound per square foot = 0.0479 kPa.

Note: Check sources for availability of lumber in lengths greater than 20 feet.

a. Dead load limits for townhouses in Seismic Design Category C and all structures in Seismic Design Categories D_0, D_1 and D_2 shall be determined in accordance with Section R301.2.2.2.

TABLE R502.3.1(2)
FLOOR JOIST SPANS FOR COMMON LUMBER SPECIES
(Residential living areas, live load = 40 psf, L/Δ = 360)[b]

JOIST SPACING (Inches)	SPECIES AND GRADE		DEAD LOAD = 10 psf				DEAD LOAD = 20 psf			
			2 × 6	2 × 8	2 × 10	2 × 12	2 × 6	2 × 8	2 × 10	2 × 12
			Maximum floor joist spans							
			(ft. - in.)	(ft. - in.)	(ft. - in.)	(ft. - in.)	(ft. - in.)	(ft. - in.)	(ft. - in.)	(ft. - in.)
12	Douglas fir-larch	SS	11-4	15-0	19-1	23-3	11-4	15-0	19-1	23-3
	Douglas fir-larch	#1	10-11	14-5	18-5	22-0	10-11	14-2	17-4	20-1
	Douglas fir-larch	#2	10-9	14-2	18-0	20-11	10-8	13-6	16-5	19-1
	Douglas fir-larch	#3	8-11	11-3	13-9	16-0	8-1	10-3	12-7	14-7
	Hem-fir	SS	10-9	14-2	18-0	21-11	10-9	14-2	18-0	21-11
	Hem-fir	#1	10-6	13-10	17-8	21-6	10-6	13-10	17-1	19-10
	Hem-fir	#2	10-0	13-2	16-10	20-4	10-0	13-1	16-0	18-6
	Hem-fir	#3	8-8	11-0	13-5	15-7	7-11	10-0	12-3	14-3
	Southern pine	SS	11-2	14-8	18-9	22-10	11-2	14-8	18-9	22-10
	Southern pine	#1	10-9	14-2	18-0	21-11	10-9	14-2	16-11	20-1
	Southern pine	#2	10-3	13-6	16-2	19-1	9-10	12-6	14-9	17-5
	Southern pine	#3	8-2	10-3	12-6	14-9	7-5	9-5	11-5	13-6
	Spruce-pine-fir	SS	10-6	13-10	17-8	21-6	10-6	13-10	17-8	21-6
	Spruce-pine-fir	#1	10-3	13-6	17-3	20-7	10-3	13-3	16-3	18-10
	Spruce-pine-fir	#2	10-3	13-6	17-3	20-7	10-3	13-3	16-3	18-10
	Spruce-pine-fir	#3	8-8	11-0	13-5	15-7	7-11	10-0	12-3	14-3
16	Douglas fir-larch	SS	10-4	13-7	17-4	21-1	10-4	13-7	17-4	21-1
	Douglas fir-larch	#1	9-11	13-1	16-5	19-1	9-8	12-4	15-0	17-5
	Douglas fir-larch	#2	9-9	12-9	15-7	18-1	9-3	11-8	14-3	16-6
	Douglas fir-larch	#3	7-8	9-9	11-11	13-10	7-0	8-11	10-11	12-7
	Hem-fir	SS	9-9	12-10	16-5	19-11	9-9	12-10	16-5	19-11
	Hem-fir	#1	9-6	12-7	16-0	18-10	9-6	12-2	14-10	17-2
	Hem-fir	#2	9-1	12-0	15-2	17-7	8-11	11-4	13-10	16-1
	Hem-fir	#3	7-6	9-6	11-8	13-6	6-10	8-8	10-7	12-4
	Southern pine	SS	10-2	13-4	17-0	20-9	10-2	13-4	17-0	20-9
	Southern pine	#1	9-9	12-10	16-1	19-1	9-9	12-7	14-8	17-5
	Southern pine	#2	9-4	11-10	14-0	16-6	8-6	10-10	12-10	15-1
	Southern pine	#3	7-1	8-11	10-10	12-10	6-5	8-2	9-10	11-8
	Spruce-pine-fir	SS	9-6	12-7	16-0	19-6	9-6	12-7	16-0	19-6
	Spruce-pine-fir	#1	9-4	12-3	15-5	17-10	9-1	11-6	14-1	16-3
	Spruce-pine-fir	#2	9-4	12-3	15-5	17-10	9-1	11-6	14-1	16-3
	Spruce-pine-fir	#3	7-6	9-6	11-8	13-6	6-10	8-8	10-7	12-4

(continued)

TABLE R502.3.1(2)—continued
FLOOR JOIST SPANS FOR COMMON LUMBER SPECIES
(Residential living areas, live load = 40 psf, L/Δ = 360)[b]

JOIST SPACING (inches)	SPECIES AND GRADE		DEAD LOAD = 10 psf				DEAD LOAD = 20 psf			
			2 × 6	2 × 8	2 × 10	2 × 12	2 × 6	2 × 8	2 × 10	2 × 12
			Maximum floor joist spans							
			(ft. - in.)	(ft. - in.)	(ft. - in.)	(ft. - in.)	(ft. - in.)	(ft. - in.)	(ft. - in.)	(ft. - in.)
19.2	Douglas fir-larch	SS	9-8	12-10	16-4	19-10	9-8	12-10	16-4	19-6
	Douglas fir-larch	#1	9-4	12-4	15-0	17-5	8-10	11-3	13-8	15-11
	Douglas fir-larch	#2	9-2	11-8	14-3	16-6	8-5	10-8	13-0	15-1
	Douglas fir-larch	#3	7-0	8-11	10-11	12-7	6-5	8-2	9-11	11-6
	Hem-fir	SS	9-2	12-1	15-5	18-9	9-2	12-1	15-5	18-9
	Hem-fir	#1	9-0	11-10	14-10	17-2	8-9	11-1	13-6	15-8
	Hem-fir	#2	8-7	11-3	13-10	16-1	8-2	10-4	12-8	14-8
	Hem-fir	#3	6-10	8-8	10-7	12-4	6-3	7-11	9-8	11-3
	Southern pine	SS	9-6	12-7	16-0	19-6	9-6	12-7	16-0	19-6
	Southern pine	#1	9-2	12-1	14-8	17-5	9-0	11-5	13-5	15-11
	Southern pine	#2	8-6	10-10	12-10	15-1	7-9	9-10	11-8	13-9
	Southern pine	#3	6-5	8-2	9-10	11-8	5-11	7-5	9-0	10-8
	Spruce-pine-fir	SS	9-0	11-10	15-1	18-4	9-0	11-10	15-1	17-9
	Spruce-pine-fir	#1	8-9	11-6	14-1	16-3	8-3	10-6	12-10	14-10
	Spruce-pine-fir	#2	8-9	11-6	14-1	16-3	8-3	10-6	12-10	14-10
	Spruce-pine-fir	#3	6-10	8-8	10-7	12-4	6-3	7-11	9-8	11-3
24	Douglas fir-larch	SS	9-0	11-11	15-2	18-5	9-0	11-11	15-0	17-5
	Douglas fir-larch	#1	8-8	11-0	13-5	15-7	7-11	10-0	12-3	14-3
	Douglas fir-larch	#2	8-3	10-5	12-9	14-9	7-6	9-6	11-8	13-6
	Douglas fir-larch	#3	6-3	8-0	9-9	11-3	5-9	7-3	8-11	10-4
	Hem-fir	SS	8-6	11-3	14-4	17-5	8-6	11-3	14-4	16-10[a]
	Hem-fir	#1	8-4	10-10	13-3	15-5	7-10	9-11	12-1	14-0
	Hem-fir	#2	7-11	10-2	12-5	14-4	7-4	9-3	11-4	13-1
	Hem-fir	#3	6-2	7-9	9-6	11-0	5-7	7-1	8-8	10-1
	Southern pine	SS	8-10	11-8	14-11	18-1	8-10	11-8	14-11	18-0
	Southern pine	#1	8-6	11-3	13-1	15-7	8-1	10-3	12-0	14-3
	Southern pine	#2	7-7	9-8	11-5	13-6	7-0	8-10	10-5	12-4
	Southern pine	#3	5-9	7-3	8-10	10-5	5-3	6-8	8-1	9-6
	Spruce-pine-fir	SS	8-4	11-0	14-0	17-0	8-4	11-0	13-8	15-11
	Spruce-pine-fir	#1	8-1	10-3	12-7	14-7	7-5	9-5	11-6	13-4
	Spruce-pine-fir	#2	8-1	10-3	12-7	14-7	7-5	9-5	11-6	13-4
	Spruce-pine-fir	#3	6-2	7-9	9-6	11-0	5-7	7-1	8-8	10-1

For SI: 1 inch = 25.4 mm, 1 foot = 304.8 mm, 1 pound per square foot = 0.0479 kPa.

Note: Check sources for availability of lumber in lengths greater than 20 feet.

a. End bearing length shall be increased to 2 inches.

b. Dead load limits for townhouses in Seismic Design Category C and all structures in Seismic Design Categories D_0, D_1, and D_2 shall be determined in accordance with Section R301.2.2.2.

R502.3.2 Other floor joists. Table R502.3.1(2) shall be used to determine the maximum allowable span of floor joists that support other areas of the building, other than sleeping rooms and attics, provided that the design live load does not exceed 40 pounds per square foot (1.92 kPa) and the design dead load does not exceed 20 pounds per square foot (0.96 kPa).

R502.3.3 Floor cantilevers. Floor cantilever spans shall not exceed the nominal depth of the wood floor joist. Floor cantilevers constructed in accordance with Table R502.3.3(1) shall be permitted where supporting a light-frame bearing wall and roof only. Floor cantilevers supporting an exterior balcony are permitted to be constructed in accordance with Table R502.3.3(2).

R502.4 Joists under bearing partitions. Joists under parallel bearing partitions shall be of adequate size to support the load. Double joists, sized to adequately support the load, that are separated to permit the installation of piping or vents shall be full-depth solid blocked with lumber not less than 2 inches (51 mm) in nominal thickness spaced not more than 4 feet (1219 mm) on center. Bearing partitions perpendicular to joists shall not be offset from supporting girders, walls or partitions more than the joist depth unless such joists are of sufficient size to carry the additional load.

R502.5 Allowable girder and header spans. The allowable spans of girders and headers fabricated of dimension lumber shall not exceed the values set forth in Tables R602.7(1), R602.7(2) and R602.7(3).

R502.6 Bearing. The ends of each joist, beam or girder shall have not less than $1^1/_2$ inches (38 mm) of bearing on wood or metal, have not less than 3 inches of bearing (76 mm) on masonry or concrete or be supported by approved joist hangers. Alternatively, the ends of joists shall be supported on a 1-inch by 4-inch (25 mm by 102 mm) ribbon strip and shall be nailed to the adjacent stud. The bearing on masonry or concrete shall be direct, or a sill plate of 2-inch-minimum (51 mm) nominal thickness shall be provided under the joist, beam or girder. The sill plate shall provide a minimum nominal bearing area of 48 square inches (30 865 mm^2).

R502.6.1 Floor systems. Joists framing from opposite sides over a bearing support shall lap not less than 3 inches (76 mm) and shall be nailed together with a minimum three 10d face nails. A wood or metal splice with strength equal to or greater than that provided by the nailed lap is permitted.

R502.6.2 Joist framing. Joists framing into the side of a wood girder shall be supported by approved framing anchors or on ledger strips not less than nominal 2 inches by 2 inches (51 mm by 51 mm).

R502.7 Lateral restraint at supports. Joists shall be supported laterally at the ends by full-depth solid blocking not less than 2 inches (51 mm) nominal in thickness; or by attachment to a full-depth header, band or rim joist, or to an adjoining stud or shall be otherwise provided with lateral support to prevent rotation.

Exceptions:

1. Trusses, structural composite lumber, structural glued-laminated members and I-joists shall be supported laterally as required by the manufacturer's recommendations.
2. In Seismic Design Categories D_0, D_1 and D_2, lateral restraint shall be provided at each intermediate support.

R502.7.1 Bridging. Joists exceeding a nominal 2 inches by 12 inches (51 mm by 305 mm) shall be supported laterally by solid blocking, diagonal bridging (wood or metal), or a continuous 1-inch by 3-inch (25 mm by 76 mm) strip nailed across the bottom of joists perpendicular to joists at intervals not exceeding 8 feet (2438 mm).

Exception: Trusses, structural composite lumber, structural glued-laminated members and I-joists shall be supported laterally as required by the manufacturer's recommendations.

R502.8 Cutting, drilling and notching. Structural floor members shall not be cut, bored or notched in excess of the limitations specified in this section. See Figure R502.8.

R502.8.1 Sawn lumber. Notches in solid lumber joists, rafters and beams shall not exceed one-sixth of the depth of the member, shall not be longer than one-third of the depth of the member and shall not be located in the middle one-third of the span. Notches at the ends of the member shall not exceed one-fourth the depth of the member. The tension side of members 4 inches (102 mm) or greater in nominal thickness shall not be notched except at the ends of the members. The diameter of holes bored or cut into members shall not exceed one-third the depth of the member. Holes shall not be closer than 2 inches (51 mm) to the top or bottom of the member, or to any other hole located in the member. Where the member is notched, the hole shall not be closer than 2 inches (51 mm) to the notch.

R502.8.2 Engineered wood products. Cuts, notches and holes bored in trusses, structural composite lumber, structural glue-laminated members, cross-laminated timber members or I-joists are prohibited except where permitted by the manufacturer's recommendations or where the effects of such alterations are specifically considered in the design of the member by a registered design professional.

R502.9 Fastening. Floor framing shall be nailed in accordance with Table R602.3(1). Where posts and beam or girder construction is used to support floor framing, positive connections shall be provided to ensure against uplift and lateral displacement.

R502.10 Framing of openings. Openings in floor framing shall be framed with header and trimmer joists. Where the header joist span does not exceed 4 feet (1219 mm), the header joist shall be a single member the same size as the floor joist. Single trimmer joists shall be used to carry a single header joist that is located within 3 feet (914 mm) of the trimmer joist bearing. Where the header joist span exceeds 4 feet (1219 mm), the trimmer joists and the header joist shall be doubled and of sufficient cross section to support the floor joists framing into the header.

R502.11 Wood trusses.

R502.11.1 Design. Wood trusses shall be designed in accordance with approved engineering practice. The design and manufacture of metal-plate-connected wood trusses shall comply with ANSI/TPI 1. The truss design drawings shall be prepared by a registered *design* professional. <

TABLE R502.3.3(1)
CANTILEVER SPANS FOR FLOOR JOISTS SUPPORTING LIGHT-FRAME EXTERIOR BEARING WALL AND ROOF ONLY[a, b, c, f, g, h]
(Floor Live Load ≤ 40 psf, Roof Live Load ≤ 20 psf)

MEMBER & SPACING	MAXIMUM CANTILEVER SPAN (uplift force at backspan support in lbs.)[d, e]											
	Ground Snow Load											
	≤ 20 psf			30 psf			50 psf			70 psf		
	Roof Width			Roof Width			Roof Width			Roof Width		
	24 ft	32 ft	40 ft	24 ft	32 ft	40 ft	24 ft	32 ft	40 ft	24 ft	32 ft	40 ft
2 × 8 @ 12″	20″ (177)	15″ (227)	—	18″ (209)	—	—	—	—	—	—	—	—
2 × 10 @ 16″	29″ (228)	21″ (297)	16″ (364)	26″ (271)	18″ (354)	—	20″ (375)	—	—	—	—	—
2 × 10 @ 12″	36″ (166)	26″ (219)	20″ (270)	34″ (198)	22″ (263)	16″ (324)	26″ (277)	—	—	19″ (356)	—	—
2 × 12 @ 16″	—	32″ (287)	25″ (356)	36″ (263)	29″ (345)	21″ (428)	29″ (367)	20″ (484)	—	23″ (471)	—	—
2 × 12 @ 12″	—	42″ (209)	31″ (263)	—	37″ (253)	27″ (317)	36″ (271)	27″ (358)	17″ (447)	31″ (348)	19″ (462)	—
2 × 12 @ 8″	—	48″ (136)	45″ (169)	—	48″ (164)	38″ (206)	—	40″ (233)	26″ (294)	36″ (230)	29″ (304)	18″ (379)

For SI: 1 inch = 25.4 mm, 1 foot = 304.8 mm, 1 pound per square foot = 0.0479 kPa.

a. Tabulated values are for clear-span roof supported solely by exterior bearing walls.

b. Spans are based on No. 2 Grade lumber of Douglas fir-larch, hem-fir, and spruce-pine-fir for repetitive (three or more) members. No.1 or better shall be used for Southern pine.

c. Ratio of backspan to cantilever span shall be not less than 3:1.

d. Connections capable of resisting the indicated uplift force shall be provided at the backspan support.

e. Uplift force is for a backspan to cantilever span ratio of 3:1. Tabulated uplift values are permitted to be reduced by multiplying by a factor equal to 3 divided by the actual backspan ratio provided (3/backspan ratio).

f. See Section R301.2.2.6, Item 1, for additional limitations on cantilevered floor joists for detached one- and two-family dwellings in Seismic Design Category D_0, D_1, or D_2 and townhouses in Seismic Design Category C, D_0, D_1 or D_2.

g. A full-depth rim joist shall be provided at the unsupported end of the cantilever joists. Solid blocking shall be provided at the supported end. Where the cantilever length is 24 inches or less and the building is assigned to Seismic Design Category A, B or C, solid blocking at the support for the cantilever shall not be required.

h. Linear interpolation shall be permitted for building widths and ground snow loads other than shown.

TABLE R502.3.3(2)
CANTILEVER SPANS FOR FLOOR JOISTS SUPPORTING EXTERIOR BALCONY[a, b, e, f]

MEMBER SIZE	SPACING	MAXIMUM CANTILEVER SPAN (uplift force at backspan support in lbs.)[c, d]		
		Ground Snow Load		
		≤ 30 psf	50 psf	70 psf
2 × 8	12″	42″ (139)	39″ (156)	34″ (165)
2 × 8	16″	36″ (151)	34″ (171)	29″ (180)
2 × 10	12″	61″ (164)	57″ (189)	49″ (201)
2 × 10	16″	53″ (180)	49″ (208)	42″ (220)
2 × 10	24″	43″ (212)	40″ (241)	34″ (255)
2 × 12	16″	72″ (228)	67″ (260)	57″ (268)
2 × 12	24″	58″ (279)	54″ (319)	47″ (330)

For SI: 1 inch = 25.4 mm, 1 pound per square foot = 0.0479 kPa.

a. Spans are based on No. 2 Grade lumber of Douglas fir-larch, hem-fir, and spruce-pine-fir for repetitive (three or more) members. No.1 or better shall be used for Southern pine.

b. Ratio of backspan to cantilever span shall be not less than 2:1.

c. Connections capable of resisting the indicated uplift force shall be provided at the backspan support.

d. Uplift force is for a backspan to cantilever span ratio of 2:1. Tabulated uplift values are permitted to be reduced by multiplying by a factor equal to 2 divided by the actual backspan ratio provided (2/backspan ratio).

e. A full-depth rim joist shall be provided at the unsupported end of the cantilever joists. Solid blocking shall be provided at the supported end. Where the cantilever length is 24 inches or less and the building is assigned to Seismic Design Category A, B or C, solid blocking at the support for the cantilever shall not be required.

f. Linear interpolation shall be permitted for ground snow loads other than shown.

R502.11.2 Bracing. Trusses shall be braced to prevent rotation and provide lateral stability in accordance with the requirements specified in the construction documents for the building and on the individual truss design drawings. In the absence of specific bracing requirements, trusses shall be braced in accordance with accepted industry practices, such as, the SBCA *Building Component Safety Information (BCSI) Guide to Good Practice for Handling, Installing & Bracing of Metal Plate Connected Wood Trusses.*

R502.11.3 Alterations to trusses. Truss members and components shall not be cut, notched, spliced or otherwise altered in any way without the approval of a registered design professional. Alterations resulting in the addition of load that exceeds the design load for the truss, shall not be permitted without verification that the truss is capable of supporting the additional loading.

R502.11.4 Truss design drawings. Truss design drawings, prepared in compliance with Section R502.11.1, shall be submitted to the building official and approved prior to installation. Truss design drawings shall be provided with the shipment of trusses delivered to the job site. Truss design drawings shall include, at a minimum, the information specified as follows:

1. Slope or depth, span and spacing.
2. Location of all joints.
3. Required bearing widths.
4. Design loads as applicable:
   - 4.1. Top chord live load.
   - 4.2. Top chord dead load.
   - 4.3. Bottom chord live load.

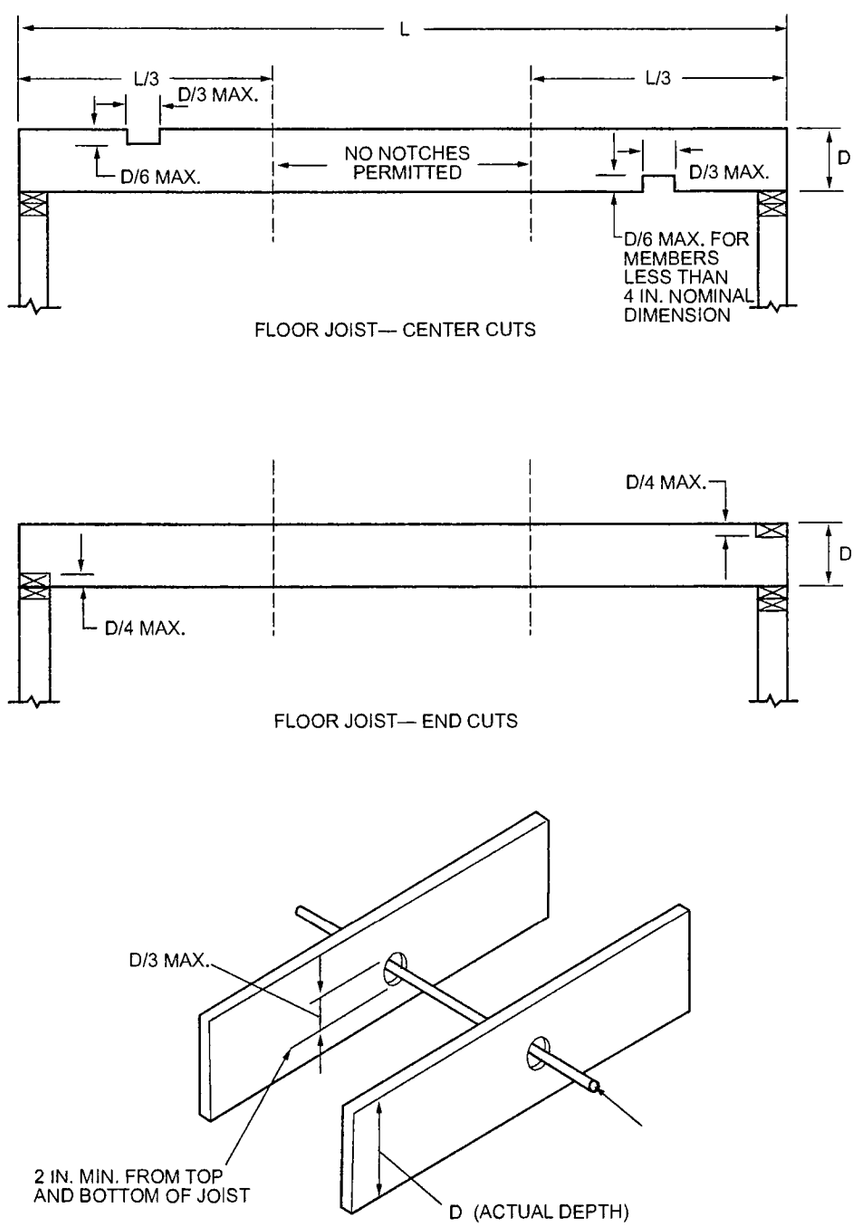

For SI: 1 inch = 25.4 mm.

FIGURE R502.8
CUTTING, NOTCHING AND DRILLING

4.4. Bottom chord dead load.

4.5. Concentrated loads and their points of application.

4.6. Controlling wind and earthquake loads.

5. Adjustments to lumber and joint connector design values for conditions of use.

6. Each reaction force and direction.

7. Joint connector type and description, such as size, thickness or gage, and the dimensioned location of each joint connector except where symmetrically located relative to the joint interface.

8. Lumber size, species and grade for each member.

9. Connection requirements for:

9.1. Truss-to-girder-truss.

9.2. Truss ply-to-ply.

9.3. Field splices.

10. Calculated deflection ratio, maximum description for live and total load, or both.

11. Maximum axial compression forces in the truss members to enable the building designer to design the size, connections and anchorage of the permanent continuous lateral bracing. Forces shall be shown on the truss drawing or on supplemental documents.

12. Required permanent truss member bracing location.

R502.12 Draftstopping required. Draftstopping shall be provided in accordance with Section R302.12.

R502.13 Fireblocking required. Fireblocking shall be provided in accordance with Section R302.11.

SECTION R503
FLOOR SHEATHING

R503.1 Lumber sheathing. Maximum allowable spans for lumber used as floor sheathing shall conform to Tables R503.1, R503.2.1.1(1) and R503.2.1.1(2).

TABLE R503.1
MINIMUM THICKNESS OF LUMBER FLOOR SHEATHING

JOIST OR BEAM SPACING (inches)	MINIMUM NET THICKNESS	
	Perpendicular to joist	Diagonal to joist
24	$^{11}/_{16}$	$^{3}/_{4}$
16	$^{5}/_{8}$	$^{5}/_{8}$
48[a]	$1^{1}/_{2}$ T & G	N/A
54[b]		
60[c]		

For SI: 1 inch = 25.4 mm, 1 pound per square inch = 6.895 kPa.

N/A = Not Applicable.

a. For this support spacing, lumber sheathing shall have a minimum F_b of 675 and minimum E of 1,100,000 (see ANSI AWC NDS).

b. For this support spacing, lumber sheathing shall have a minimum F_b of 765 and minimum E of 1,400,000 (see ANSI AWC NDS).

c. For this support spacing, lumber sheathing shall have a minimum F_b of 855 and minimum E of 1,700,000 (see ANSI AWC NDS).

R503.1.1 End joints. End joints in lumber used as subflooring shall occur over supports unless end-matched lumber is used, in which case each piece shall bear on not less than two joists. Subflooring shall be permitted to be omitted where joist spacing does not exceed 16 inches (406 mm) and a 1-inch (25 mm) nominal tongue-and-groove wood strip flooring is applied perpendicular to the joists.

R503.2 Wood structural panel sheathing.

R503.2.1 Identification and grade. Wood structural panel sheathing used for structural purposes shall conform to CSA O325, CSA O437 DOC PS 1 or DOC PS 2. Panels shall be identified for grade, bond classification and Performance Category by a grade mark or certificate of inspection issued by an approved agency. The Performance Category value shall be used as the "nominal panel thickness" or "panel thickness" wherever referenced in this code.

R503.2.1.1 Subfloor and combined subfloor underlayment. Where used as subflooring or combination subfloor underlayment, wood structural panels shall be of one of the grades specified in Table R503.2.1.1(1). Where sanded plywood is used as combination subfloor underlayment, the grade, bond classification, and Performance Category shall be as specified in Table R503.2.1.1(2).

TABLE R503.2.1.1(2)
ALLOWABLE SPANS FOR SANDED PLYWOOD COMBINATION SUBFLOOR UNDERLAYMENT[a]

IDENTIFICATION	SPACING OF JOISTS (Inches)		
	16	20	24
Species group[b]	—	—	—
1	$^{1}/_{2}$	$^{5}/_{8}$	$^{3}/_{4}$
2, 3	$^{5}/_{8}$	$^{3}/_{4}$	$^{7}/_{8}$
4	$^{3}/_{4}$	$^{7}/_{8}$	1

For SI: 1 inch = 25.4 mm, 1 pound per square foot = 0.0479 kPa.

a. Plywood continuous over two or more spans and face grain perpendicular to supports. Unsupported edges shall be tongue-and-groove or blocked except where nominal $^{1}/_{4}$-inch-thick wood panel-type underlayment, fiber-cement underlayment or $^{3}/_{4}$-inch wood finish floor is used. Fiber-cement underlayment shall comply with ASTM C1288 or ISO 8336 Category C. Allowable uniform live load at maximum span based on deflection of $^{1}/_{360}$ of span is 100 psf.

b. Applicable to all grades of sanded exterior-type plywood.

R503.2.2 Allowable spans. The maximum allowable span for wood structural panels used as subfloor or combination subfloor underlayment shall be as set forth in Table R503.2.1.1(1), or APA E30. The maximum span for sanded plywood combination subfloor underlayment shall be as set forth in Table R503.2.1.1(2).

R503.2.3 Installation. Wood structural panels used as subfloor or combination subfloor underlayment shall be attached to wood framing in accordance with Table R602.3(1) and shall be attached to cold-formed steel framing in accordance with Table R505.3.1(2).

R503.3 Particleboard.

R503.3.1 Identification and grade. Particleboard shall conform to ANSI A208.1 and shall be so identified by a grade mark or certificate of inspection issued by an approved agency.

TABLE R503.2.1.1(1)
ALLOWABLE SPANS AND LOADS FOR WOOD STRUCTURAL PANELS FOR ROOF AND SUBFLOOR SHEATHING AND COMBINATION SUBFLOOR UNDERLAYMENT[a, b, c]

SPAN RATING	MINIMUM NOMINAL PANEL THICKNESS (inch)	ALLOWABLE LIVE LOAD (psf)[h, l]		MAXIMUM SPAN (inches)		LOAD (pounds per square foot, at maximum span)		MAXIMUM SPAN (inches)
		SPAN @ 16″ o.c.	SPAN @ 24″ o.c.	With edge support[d]	Without edge support	Total load	Live load	
Sheathing[e]				Roof[f]				Subfloor[j]
16/0	$^3/_8$	30	—	16	16	40	30	0
20/0	$^3/_8$	50	—	20	20	40	30	0
24/0	$^3/_8$	100	30	24	20[g]	40	30	0
24/16	$^7/_{16}$	100	40	24	24	50	40	16
32/16	$^{15}/_{32}$, $^1/_2$	180	70	32	28	40	30	16[h]
40/20	$^{19}/_{32}$, $^5/_8$	305	130	40	32	40	30	20[h, i]
48/24	$^{23}/_{32}$, $^3/_4$	—	175	48	36	45	35	24
60/32	$^7/_8$	—	305	60	48	45	35	32
Underlayment, C-C plugged, single floor[e]				Roof[f]				Combination subfloor underlayment[k]
16 o.c.	$^{19}/_{32}$, $^5/_8$	100	40	24	24	50	40	16[i]
20 o.c.	$^{19}/_{32}$, $^5/_8$	150	60	32	32	40	30	20[i, j]
24 o.c.	$^{23}/_{32}$, $^3/_4$	240	100	48	36	35	25	24
32 o.c.	$^7/_8$	—	185	48	40	50	40	32
48 o.c.	$1^3/_{32}$, $1^1/_8$	—	290	60	48	50	40	48

For SI: 1 inch = 25.4 mm, 1 pound per square foot = 0.0479 kPa.

a. The allowable total loads were determined using a dead load of 10 psf. If the dead load exceeds 10 psf, then the live load shall be reduced accordingly.

b. Panels continuous over two or more spans with long dimension (strength axis) perpendicular to supports. Spans shall be limited to values shown because of possible effect of concentrated loads.

c. Applies to panels 24 inches or wider.

d. Lumber blocking, panel edge clips (one midway between each support, except two equally spaced between supports where span is 48 inches), tongue-and-groove panel edges, or other approved type of edge support.

e. Includes Structural 1 panels in these grades.

f. Uniform load deflection limitation: $^1/_{180}$ of span under live load plus dead load, $^1/_{240}$ of span under live load only.

g. Maximum span 24 inches for $^{15}/_{32}$- and $^1/_2$-inch panels.

h. Maximum span 24 inches where $^3/_4$-inch wood finish flooring is installed at right angles to joists.

i. Maximum span 24 inches where 1.5 inches of lightweight concrete or approved cellular concrete is placed over the subfloor.

j. Unsupported edges shall have tongue-and-groove joints or shall be supported with blocking unless minimum nominal $^1/_4$-inch-thick wood panel-type underlayment, fiber-cement underlayment with end and edge joints offset not less than 2 inches or $1^1/_2$ inches of lightweight concrete or approved cellular concrete is placed over the subfloor, or $^3/_4$-inch wood finish flooring is installed at right angles to the supports. Fiber-cement underlayment shall comply with ASTM C1288 or ISO 8336 Category C. Allowable uniform live load at maximum span, based on deflection of $^1/_{360}$ of span, is 100 psf.

k. Unsupported edges shall have tongue-and-groove joints or shall be supported by blocking unless nominal $^1/_4$-inch-thick wood panel-type underlayment, fiber-cement underlayment with end and edge joints offset not less than 2 inches or $^3/_4$-inch wood finish flooring is installed at right angles to the supports. Fiber-cement underlayment shall comply with ASTM C1288 or ISO 8336 Category C. Allowable uniform live load at maximum span, based on deflection of $^1/_{360}$ of span, is 100 psf, except panels with a span rating of 48 on center are limited to 65 psf total uniform load at maximum span.

l. Allowable live load values at spans of 16 inches on center and 24 inches on center taken from reference standard APA E30, APA Engineered Wood Construction Guide. Refer to reference standard for allowable spans not listed in the table.

R503.3.2 Floor underlayment. Particleboard floor underlayment shall conform to Type PBU and shall be not less than $^1/_4$ inch (6.4 mm) in thickness.

R503.3.3 Installation. Particleboard underlayment shall be installed in accordance with the recommendations of the manufacturer and attached to framing in accordance with Table R602.3(1).

SECTION R504
PRESSURE PRESERVATIVE-TREATED WOOD FLOORS (ON GROUND)

R504.1 General. Pressure preservative-treated wood basement floors and floors on ground shall be designed to withstand axial forces and bending moments resulting from lateral soil pressures at the base of the exterior walls and floor live and dead loads. Floor framing shall be designed to meet joist deflection requirements in accordance with Section R301.

R504.1.1 Unbalanced soil loads. Unless special provision is made to resist sliding caused by unbalanced lateral soil loads, wood basement floors shall be limited to applications where the differential depth of fill on opposite exterior foundation walls is 2 feet (610 mm) or less.

R504.1.2 Construction. Joists in wood basement floors shall bear tightly against the narrow face of studs in the foundation wall or directly against a band joist that bears on the studs. Plywood subfloor shall be continuous over lapped joists or over butt joints between in-line joists. Sufficient

blocking shall be provided between joists to transfer lateral forces at the base of the end walls into the floor system.

R504.1.3 Uplift and buckling. Where required, resistance to uplift or restraint against buckling shall be provided by interior bearing walls or properly designed stub walls anchored in the supporting soil below.

R504.2 Site preparation. The area within the foundation walls shall have all vegetation, topsoil and foreign material removed, and any fill material that is added shall be free of vegetation and foreign material. The fill shall be compacted to ensure uniform support of the pressure preservative-treated wood floor sleepers.

R504.2.1 Base. A minimum 4-inch-thick (102 mm) granular base of gravel having a maximum size of $^3/_4$ inch (19.1 mm) or crushed stone having a maximum size of $^1/_2$ inch (12.7 mm) shall be placed over the compacted earth.

R504.2.2 Moisture barrier. Polyethylene sheeting of minimum 6-mil (0.15 mm) thickness shall be placed over the granular base. Joints shall be lapped 6 inches (152 mm) and left unsealed. The polyethylene membrane shall be placed over the pressure preservative-treated wood sleepers and shall not extend beneath the footing plates of the exterior walls.

R504.3 Materials. Framing materials, including sleepers, joists, blocking and plywood subflooring, shall be pressure-preservative treated and dried after treatment in accordance with AWPA U1 (Commodity Specification A, Special Requirement 4.2), and shall bear the label of an accredited agency.

SECTION R505
COLD-FORMED STEEL FLOOR FRAMING

R505.1 Cold-formed steel floor framing. Elements shall be straight and free of any defects that would significantly affect structural performance. Cold-formed steel floor framing members shall be in accordance with the requirements of this section.

R505.1.1 Applicability limits. The provisions of this section shall control the construction of cold-formed steel floor framing for buildings not greater than 60 feet (18 288 mm) in length perpendicular to the joist span, not greater than 40 feet (12 192 mm) in width parallel to the joist span and less than or equal to three stories above grade plane. Cold-formed steel floor framing constructed in accordance with the provisions of this section shall be limited to sites where the ultimate design wind speed is less than 140 miles per hour (63 m/s), Exposure Category B or C, and the ground snow load is less than or equal to 70 pounds per square foot (3.35 kPa).

R505.1.2 In-line framing. Where supported by cold-formed steel-framed walls in accordance with Section R603, cold-formed steel floor framing shall be constructed with floor joists located in-line with load-bearing studs located below the joists in accordance with Figure R505.1.2 and the tolerances specified as follows:

1. The maximum tolerance shall be $^3/_4$ inch (19.1 mm) between the centerline of the horizontal framing member and the centerline of the vertical framing member.
2. Where the centerline of the horizontal framing member and bearing stiffener are located to one side of the centerline of the vertical framing member, the maximum tolerance shall be $^1/_8$ inch (3 mm) between the web of the horizontal framing member and the edge of the vertical framing member.

R505.1.3 Floor trusses. Cold-formed steel trusses shall be designed, braced and installed in accordance with AISI S240. In the absence of specific bracing requirements, trusses shall be braced in accordance with accepted industry practices, such as the SBCA *Cold-Formed Steel Building Component Safety Information (CFSBCSI), Guide to Good Practice for Handling, Installing & Bracing of Cold-Formed Steel Trusses*. Truss members shall not be notched, cut or altered in any manner without an approved design.

R505.2 Structural framing. Load-bearing cold-formed steel floor framing members shall be in accordance with this section.

R505.2.1 Material. Load-bearing cold-formed steel framing members shall be cold formed to shape from structural quality sheet steel complying with the requirements of ASTM A1003: Structural Grades 33 Type H and 50 Type H.

R505.2.2 Corrosion protection. Load-bearing cold-formed steel framing shall have a metallic coating complying with ASTM A1003 and one of the following:

1. Not less than G 60 in accordance with ASTM A653.
2. Not less than AZ 50 in accordance with ASTM A792.

R505.2.3 Dimension, thickness and material grade. Load-bearing cold-formed steel floor framing members shall comply with Figure R505.2.3(1) and with the dimensional and thickness requirements specified in Table R505.2.3. Additionally, all C-shaped sections shall have a minimum flange width of 1.625 inches (41 mm) and a maximum flange width of 2 inches (51 mm). The minimum lip size for C-shaped sections shall be $^1/_2$ inch (12.7 mm). Track sections shall comply with Figure R505.2.3(2) and shall have a minimum flange width of $1^1/_4$ inch (32 mm). Minimum Grade 33 ksi stcel shall be used wherever 33 mil and 43 mil thicknesses are specified. Minimum Grade 50 ksi steel shall be used wherever 54 and 68 mil thicknesses are specified.

R505.2.4 Identification. Load-bearing cold-formed steel framing members shall have a legible *label*, stencil, stamp or embossment with the following information as a minimum:

1. Manufacturer's identification.
2. Minimum base steel thickness in inches (mm).
3. Minimum coating designation.
4. Minimum yield strength, in kips per square inch (ksi) (MPa).

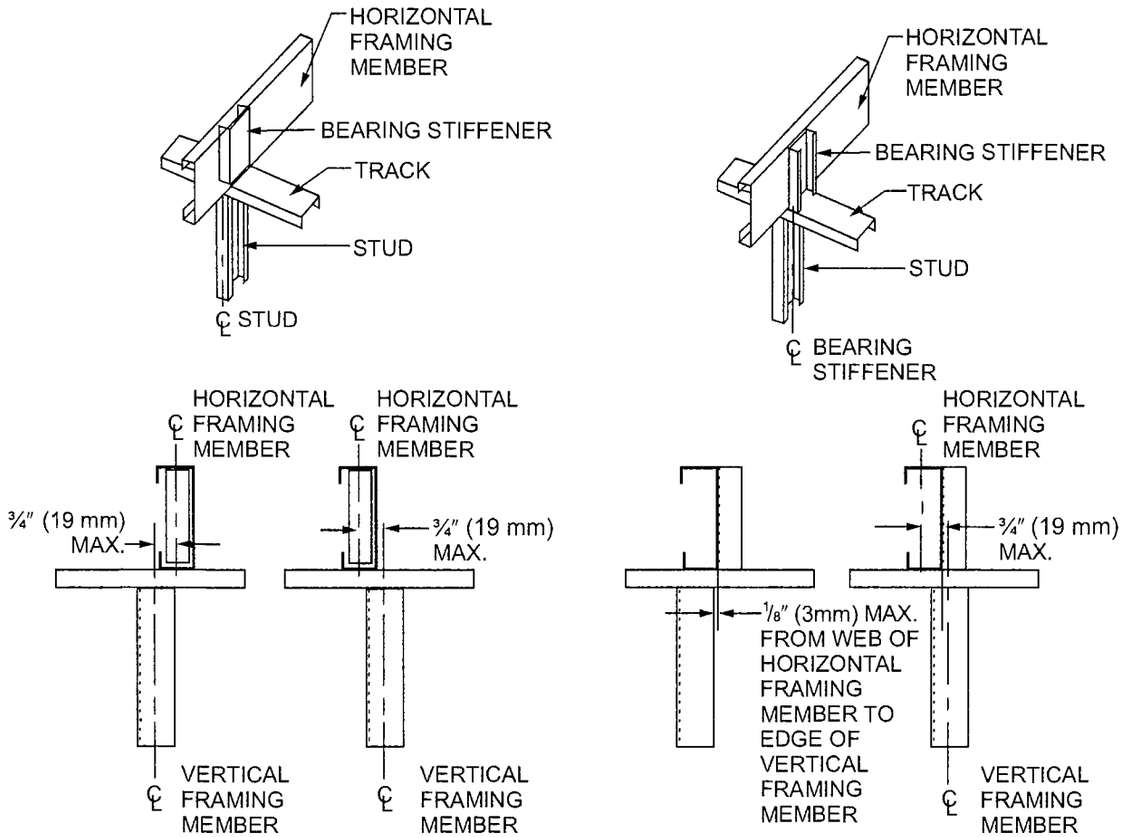

For SI. 1 inch = 25.4 mm.

FIGURE R505.1.2
IN-LINE FRAMING

R505.2.5 Fastening. Screws for steel-to-steel connections shall be installed with a minimum edge distance and center-to-center spacing of $^1/_2$ inch (12.7 mm), shall be self-drilling tapping, and shall conform to ASTM C1513. Floor sheathing shall be attached to cold-formed steel joists with minimum No. 8 self-drilling tapping screws that conform to ASTM C1513. Screws attaching floor sheathing to cold-formed steel joists shall have a minimum head diameter of 0.292 inch (7.4 mm) with countersunk heads and shall be installed with a minimum edge distance of $^3/_8$ inch (9.5 mm). Gypsum board ceilings shall be attached to cold-formed steel joists with minimum No. 6 screws conforming to ASTM C954 or ASTM C1513 with a bugle-head style and shall be installed in accordance with Section R702. For all connections, screws shall extend through the steel not fewer than three exposed threads. Fasteners shall have a rust-inhibitive coating suitable for the installation in which they are being used, or be manufactured from material not susceptible to corrosion.

R505.2.6 Web holes, web hole reinforcing and web hole patching. Web holes, web hole reinforcing, and web hole patching shall be in accordance with this section.

R505.2.6.1 Web holes. Web holes in floor joists shall comply with all of the following conditions:

1. Holes shall conform to Figure R505.2.6.1.
2. Holes shall be permitted only along the centerline of the web of the framing member.
3. Holes shall have a center-to-center spacing of not less than 24 inches (610 mm).
4. Holes shall have a web hole width not greater than 0.5 times the member depth, or $2^1/_2$ inches (64.5 mm).
5. Holes shall have a web hole length not exceeding $4^1/_2$ inches (114 mm).
6. Holes shall have a minimum distance between the edge of the bearing surface and the edge of the web hole of not less than 10 inches (254 mm).

Framing members with web holes not conforming to these requirements shall be reinforced in accordance with Section R505.2.6.2, patched in accordance with Section R505.2.6.3 or designed in accordance with accepted engineering practices.

TABLE R505.2.3
COLD-FORMED STEEL JOIST SIZES AND THICKNESS

MEMBER DESIGNATION[a]	WEB DEPTH (Inches)	MINIMUM BASE STEEL THICKNESS mil (inches)
550S162-t	5.5	33 (0.0329), 43 (0.0428), 54 (0.0538), 68 (0.0677)
800S162-t	8	33 (0.0329), 43 (0.0428), 54 (0.0538), 68 (0.0677)
1000S162-t	10	43 (0.0428), 54 (0.0538), 68 (0.0677)
1200S162-t	12	43 (0.0428), 54 (0.0538), 68 (0.0677)

For SI: 1 inch = 25.4 mm, 1 mil = 0.0254 mm.

a. The member designation is defined by the first number representing the member depth in 0.01 inch, the letter "S" representing a stud or joist member, the second number representing the flange width in 0.01 inch, and the letter "t" shall be a number representing the minimum base metal thickness in mils.

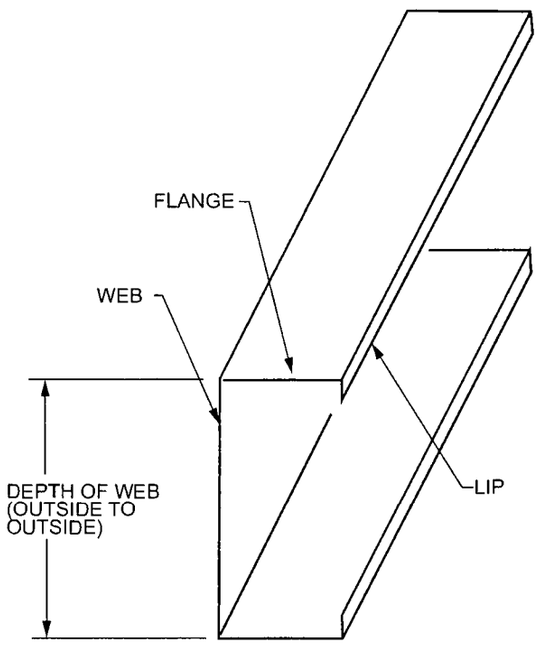

FIGURE R505.2.3(1)
C-SHAPED SECTION

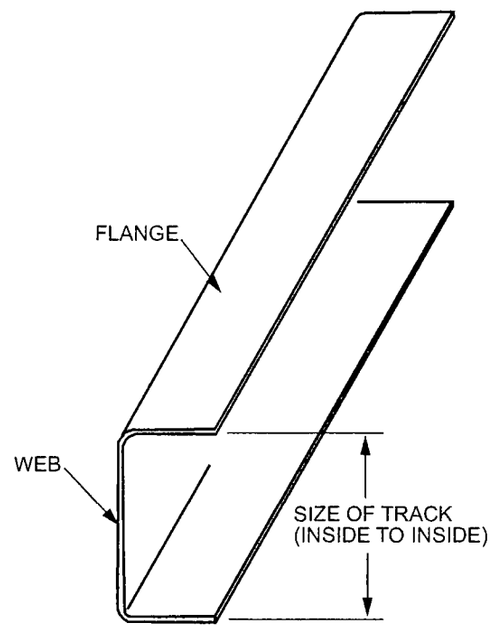

FIGURE R505.2.3(2)
TRACK SECTION

R505.2.6.2 Web hole reinforcing. Reinforcement of web holes in floor joists not conforming to the requirements of Section R505.2.6.1 shall be permitted if the hole is located fully within the center 40 percent of the span and the depth and length of the hole does not exceed 65 percent of the flat width of the web. The reinforcing shall be a steel plate or C-shaped section with a hole that does not exceed the web hole size limitations of Section R505.2.6.1 for the member being reinforced. The steel reinforcing shall be not thinner than the thickness of the receiving member and shall extend not less than 1 inch (25 mm) beyond all edges of the hole. The steel reinforcing shall be fastened to the web of the receiving member with No. 8 screws spaced not more than 1 inch (25 mm) center-to-center along the edges of the patch with minimum edge distance of $^1/_2$ inch (12.7 mm).

R505.2.6.3 Hole patching. Patching of web holes in floor joists not conforming to the requirements in Section R505.2.6.1 shall be permitted in accordance with either of the following methods:

1. Framing members shall be replaced or designed in accordance with accepted engineering practices where web holes exceed the following size limits:
   1.1. The depth of the hole, measured across the web, exceeds 70 percent of the flat width of the web.
   1.2. The length of the hole, measured along the web, exceeds 10 inches (254 mm) or the depth of the web, whichever is greater.
2. Web holes not exceeding the dimensional requirements in Section R505.2.6.3, Item 1, shall be patched with a solid steel plate, stud section or track section in accordance with Figure R505.2.6.3. The steel patch shall, as a minimum, be of the same thickness as the receiving member and shall extend not less than 1 inch (25 mm) beyond all edges of the hole. The steel patch shall be fastened to the web of the receiving member with No. 8 screws spaced not more than 1 inch (25 mm) center-to-center along the edges of the patch with minimum edge distance of $^1/_2$ inch (12.7 mm).

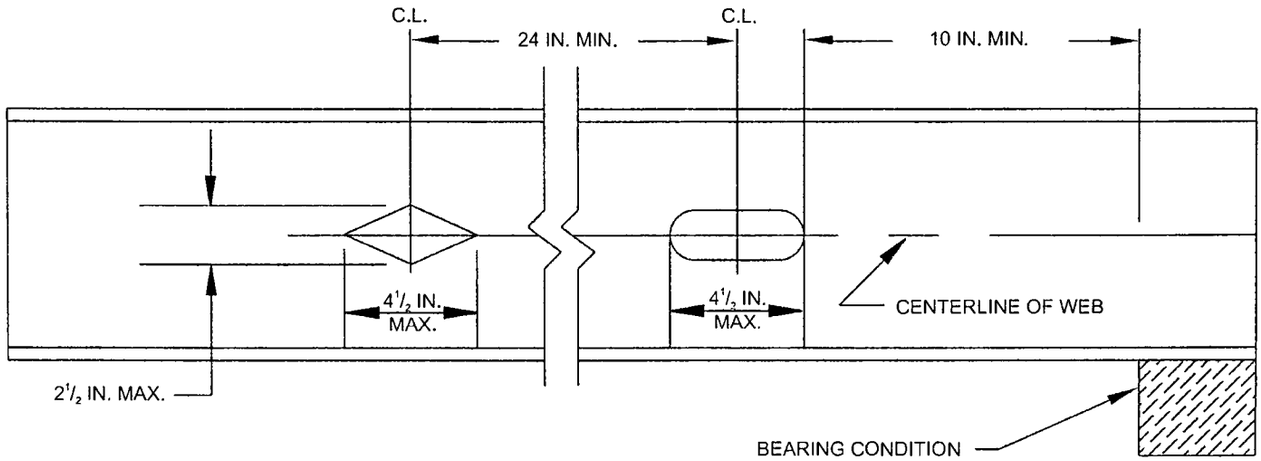

For SI: 1 inch = 25.4 mm.

FIGURE R505.2.6.1
FLOOR JOIST WEB HOLES

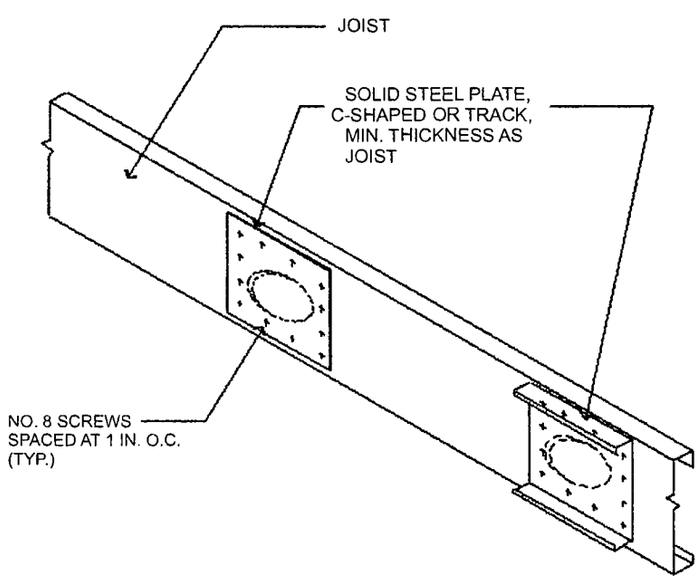

For SI: 1 inch = 25.4 mm.

FIGURE R505.2.6.3
FLOOR JOIST WEB HOLE PATCH

R505.3 Floor construction. Cold-formed steel floors shall be constructed in accordance with this section.

R505.3.1 Floor-to-foundation or load-bearing wall connections. Cold-formed steel-framed floors shall be anchored to foundations, wood sills or load-bearing walls in accordance with Table R505.3.1(1) and Figure R505.3.1(1), R505.3.1(2), R505.3.1(3), R505.3.1(4), R505.3.1(5) or R505.3.1(6). Anchor bolts shall be located not more than 12 inches (305 mm) from corners or the termination of bottom tracks. Continuous cold-formed steel joists supported by interior load-bearing walls shall be constructed in accordance with Figure R505.3.1(7). Lapped cold-formed steel joists shall be constructed in accordance with Figure R505.3.1(8). End floor joists constructed on foundation walls parallel to the joist span shall be doubled unless a C-shaped bearing stiffener, sized in accordance with Section R505.3.4, is installed web-to-web with the floor joist beneath each supported wall stud, as shown in Figure R505.3.1(9). Fastening of cold-formed steel joists to other framing members shall be in accordance with Section R505.2.5 and Table R505.3.1(2).

R505.3.2 Minimum floor joist sizes. Floor joist size and thickness shall be determined in accordance with the limits set forth in Table R505.3.2 for single or continuous spans. Where continuous joist members are used, the interior bearing supports shall be located within 2 feet (610 mm) of midspan of the cold-formed steel joists, and the individual spans shall not exceed the spans in Table R505.3.2. Floor joists shall have a bearing support length of not less than $1^1/_2$ inches (38 mm) for exterior wall supports and $3^1/_2$ inches (89 mm) for interior wall supports. Tracks shall be not less than 33 mils (0.84 mm) thick except where used as part of a floor header or trimmer in accordance with Section R505.3.8. Bearing stiffeners shall be installed in accordance with Section R505.3.4.

R505.3.3 Joist bracing and blocking. Joist bracing and blocking shall be in accordance with this section.

R505.3.3.1 Joist top flange bracing. The top flanges of cold-formed steel joists shall be laterally braced by the application of floor sheathing fastened to the joists in accordance with Section R505.2.5 and Table R505.3.1(2).

TABLE R505.3.1(1)
FLOOR-TO-FOUNDATION OR BEARING WALL CONNECTION REQUIREMENTS[a, b]

FRAMING CONDITION	BASIC ULTIMATE WIND SPEED (mph) AND EXPOSURE	
	110 mph Exposure Category C or less than 139 mph Exposure Category B	Less than 139 mph Exposure Category C
Floor joist to wall track of exterior wall in accordance with Figure R505.3.1(1)	2-No. 8 screws	3-No. 8 screws
Rim track or end joist to load-bearing wall top track in accordance with Figure R505.3.1(1)	1-No. 8 screw at 24 inches o.c.	1-No. 8 screw at 24 inches o.c.
Rim track or end joist to wood sill in accordance with Figure R505.3.1(2)	Steel plate spaced at 4 feet o.c. with 4-No. 8 screws and 4-10d or 6-8d common nails	Steel plate spaced at 2 feet o.c. with 4-No. 8 screws and 4-10d or 6-8d common nails
Rim track or end joist to foundation in accordance with Figure R505.3.1(3)	$^1/_2$-inch minimum diameter anchor bolt and clip angle spaced at 6 feet o.c. with 8-No. 8 screws	$^1/_2$-inch minimum diameter anchor bolt and clip angle spaced at 4 feet o.c. with 8-No. 8 screws
Cantilevered joist to foundation in accordance with Figure R505.3.1(4)	$^1/_2$-inch minimum diameter anchor bolt and clip angle spaced at 6 feet o.c. with 8-No. 8 screws	$^1/_2$-inch minimum diameter anchor bolt and clip angle spaced at 4 feet o.c. with 8-No. 8 screws
Cantilevered joist to wood sill in accordance with Figure R505.3.1(5)	Steel plate spaced at 4 feet o.c. with 4-No. 8 screws and 4-10d or 6-8d common nails	Steel plate spaced at 2 feet o.c. with 4-No. 8 screws and 4-10d or 6-8d common nails
Cantilevered joist to exterior load-bearing wall track in accordance with Figure R505.3.1(6)	2-No. 8 screws	3-No. 8 screws

For SI: 1 inch = 25.4 mm, 1 pound per square foot = 0.0479 kPa, 1 mile per hour = 0.447 m/s, 1 foot = 304.8 mm.

a. Anchor bolts are to be located not more than 12 inches from corners or the termination of bottom tracks such as at door openings or corners. Bolts extend not less than 15 inches into masonry or 7 inches into concrete. Anchor bolts connecting cold-formed steel framing to the foundation structure are to be installed so that the distance from the center of the bolt hole to the edge of the connected member is not less than one and one-half bolt diameters.

b. All screw sizes shown are minimum.

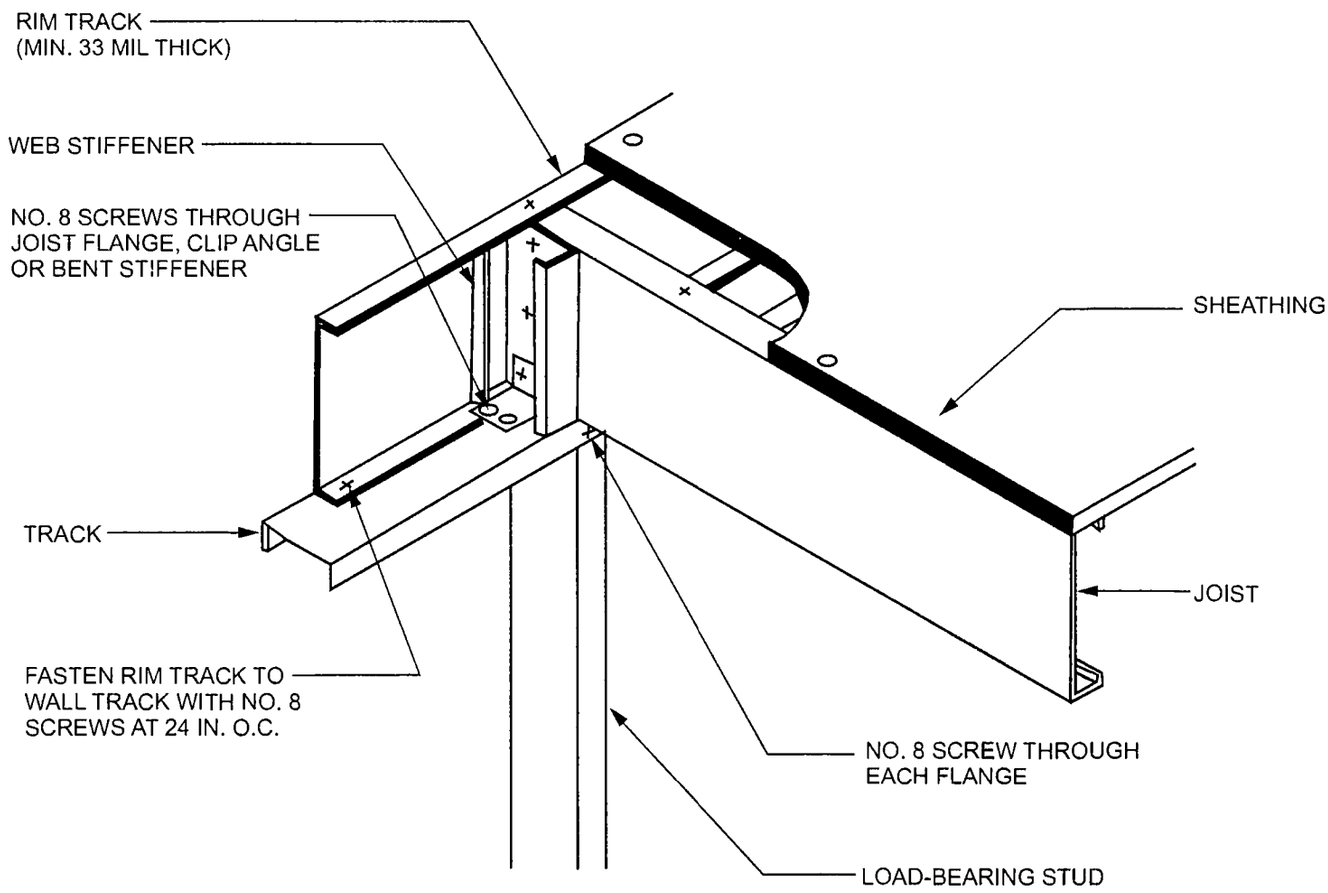

For SI: 1 mil = 0.0254 mm, 1 inch = 25.4 mm.

FIGURE R505.3.1(1)
FLOOR-TO-EXTERIOR LOAD-BEARING WALL STUD CONNECTION

R505.3.3.2 Joist bottom flange bracing/blocking. Floor joists with spans that exceed 12 feet (3658 mm) shall have the bottom flanges laterally braced in accordance with one of the following:

1. Gypsum board installed with minimum No. 6 screws in accordance with Section R702.
2. Continuous steel straps installed in accordance with Figure R505.3.3.2(1). Steel straps shall be spaced at not greater than 12 feet (3658 mm) on center and shall be not less than $1^1/_2$ inches (38 mm) in width and 33 mils (0.84 mm) in thickness. Straps shall be fastened to the bottom flange of each joist with one No. 8 screw, fastened to blocking with two No. 8 screws, and fastened at each end (of strap) with two No. 8 screws. Blocking in accordance with Figure R505.3.3.2(1) or R505.3.3.2(2) shall be installed between joists at each end of the continuous strapping and at a maximum spacing of 12 feet (3658 mm) measured along the continuous strapping (perpendicular to the joist run). Blocking shall also be located at the termination of all straps. As an alternative to blocking at the ends, anchoring the strap to a stable building component with two No. 8 screws shall be permitted.

R505.3.3.3 Blocking at interior bearing supports. Blocking is not required for continuous back-to-back floor joists at bearing supports. Blocking shall be installed between every other joist for single continuous floor joists across bearing supports in accordance with Figure R505.3.1(7). Blocking shall consist of C-shaped or track section with a minimum thickness of 33 mils (0.84 mm). Blocking shall be fastened to each adjacent joist through a 33-mil (0.84 mm) clip angle, bent web of blocking or flanges of web stiffeners with two No. 8 screws on each side. The minimum depth of the blocking shall be equal to the depth of the joist minus 2 inches (51 mm). The minimum length of the angle shall be equal to the depth of the joist minus 2 inches (51 mm).

R505.3.3.4 Blocking at cantilevers. Blocking shall be installed between every other joist over cantilever bearing supports in accordance with Figure R505.3.1(4), R505.3.1(5) or R505.3.1(6). Blocking shall consist of C-shaped or track section with minimum thickness of 33 mils (0.84 mm). Blocking shall be fastened to each adjacent joist through bent web of blocking, 33 mil clip angle or flange of web stiffener with two No. 8 screws at each end. The depth of the blocking shall be equal to the depth of the joist. The minimum length of the angle shall be equal to the depth of the joist minus 2 inches (51 mm). Blocking shall be fastened through the floor sheathing and to the support with three No. 8 screws (top and bottom).

R505.3.4 Bearing stiffeners. Bearing stiffeners shall be installed at each joist bearing location in accordance with this section, except for joists lapped over an interior support not carrying a load-bearing wall above. Floor joists supporting jamb studs with multiple members shall have two bearing stiffeners in accordance with Figure R505.3.4(1). Bearing stiffeners shall be fabricated from a C-shaped, track or clip angle member in accordance with the one of following:

1. C-shaped bearing stiffeners:
   - 1.1. Where the joist is not carrying a load-bearing wall above, the bearing stiffener shall be a minimum 33 mil (0.84 mm) thickness.
   - 1.2. Where the joist is carrying a load-bearing wall above, the bearing stiffener shall be not less than the same designation thickness as the wall stud above.
2. Track bearing stiffeners:
   - 2.1. Where the joist is not carrying a load-bearing wall above, the bearing stiffener shall be a minimum 43 mil (1.09 mm) thickness.
   - 2.2. Where the joist is carrying a load-bearing wall above, the bearing stiffener shall be not less than one designation thickness greater than the wall stud above.

The minimum length of a bearing stiffener shall be the depth of member being stiffened minus $^3/_8$ inch (9.5 mm). Each bearing stiffener shall be fastened to the web of the member it is stiffening as shown in Figure R505.3.4(2).

R505.3.5 Cutting and notching. Flanges and lips of load-bearing cold-formed steel floor framing members shall not be cut or notched.

R505.3.6 Floor cantilevers. Floor cantilevers for the top floor of a two- or three-story building or the first floor of a one-story building shall not exceed 24 inches (610 mm). Cantilevers, not exceeding 24 inches (610 mm) and supporting two stories and roof (first floor of a two-story building), shall be permitted provided that all cantilevered joists are doubled (nested or back-to-back). The doubled cantilevered joists shall extend not less than 6 feet (1829 mm) toward the inside and shall be fastened with not less than two No. 8 screws spaced at 24 inches (610 mm) on center through the webs (for back-to-back) or flanges (for nested joists).

R505.3.7 Splicing. Joists and other structural members shall not be spliced without an approved design. Splicing of tracks shall conform to Figure R505.3.7.

R505.3.8 Framing of floor openings. Openings in floors shall be framed with header and trimmer joists. Header joist spans shall not exceed 6 feet (1829 mm) or 8 feet (2438 mm) in length in accordance with Figure R505.3.8(1) or R505.3.8(2), respectively. Header and trimmer joists shall be fabricated from joist and track members, having a minimum size and thickness at least equivalent to the adjacent floor joists, and shall be installed in accordance with Figures R505.3.8(1), R505.3.8(2), R505.3.8(3) and R505.3.8(4). Each header joist shall be connected to trimmer joists with four 2-inch by 2-inch (51-mm by 51-mm) clip angles. Each clip angle shall be fastened to both the header and trimmer joists with four No. 8 screws, evenly spaced, through each leg of the clip angle. The clip angles shall have a thickness not less than that of the floor joist. Each track section for a built-up header or trimmer joist shall extend the full length of the joist (continuous).

TABLE R505.3.1(2)
FLOOR FASTENING SCHEDULE[a]

DESCRIPTION OF BUILDING ELEMENTS	NUMBER AND SIZE OF FASTENERS	SPACING OF FASTENERS
Floor joist to track of an interior load-bearing wall in accordance with Figures R505.3.1(7) and R505.3.1(8)	2 No. 8 screws	Each joist
Floor joist to track at end of joist	2 No. 8 screws	One per flange or two per bearing stiffener
Subfloor to floor joists	No. 8 screws	6 in. o.c. on edges and 12 in. o.c. at intermediate supports

For SI: 1 inch = 25.4 mm.
a. All screw sizes shown are minimum.

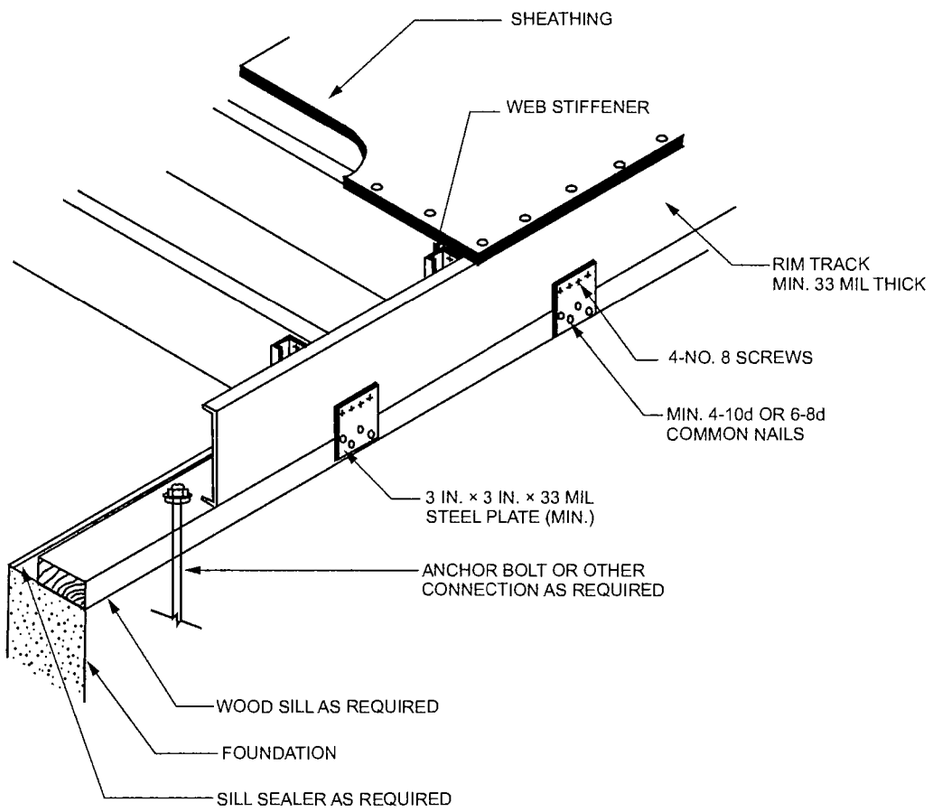

For SI: 1 mil = 0.0254 mm, 1 inch = 25.4 mm.

FIGURE R505.3.1(2)
FLOOR-TO-WOOD-SILL CONNECTION

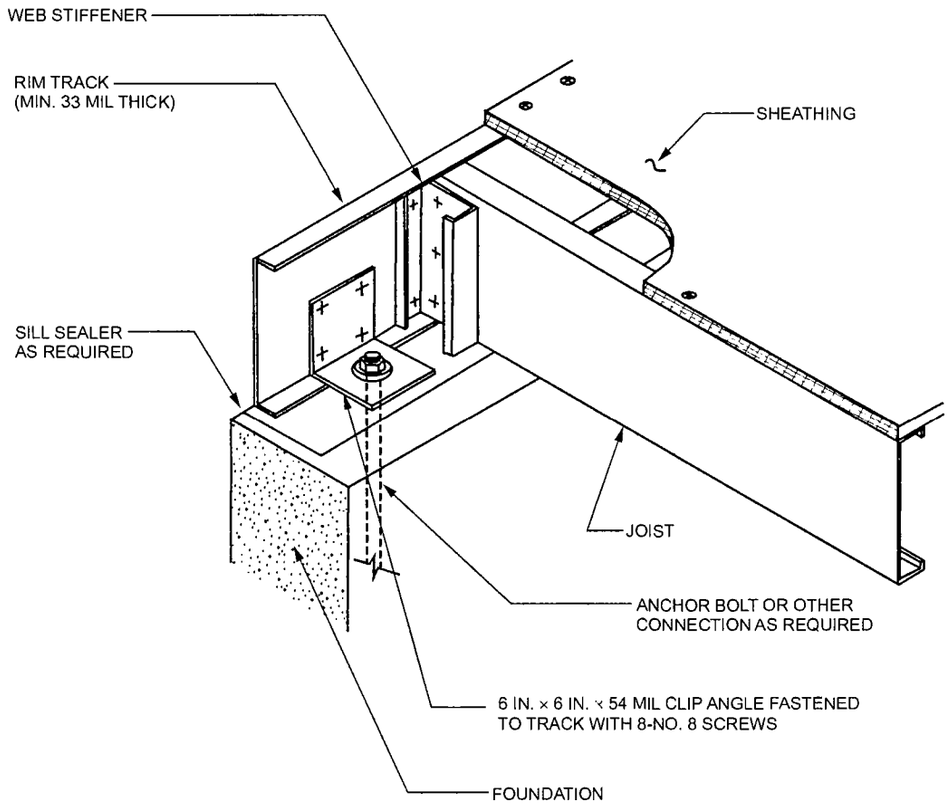

For SI: 1 mil = 0.0254 mm, 1 inch = 25.4 mm.

FIGURE R505.3.1(3)
FLOOR-TO-FOUNDATION CONNECTION

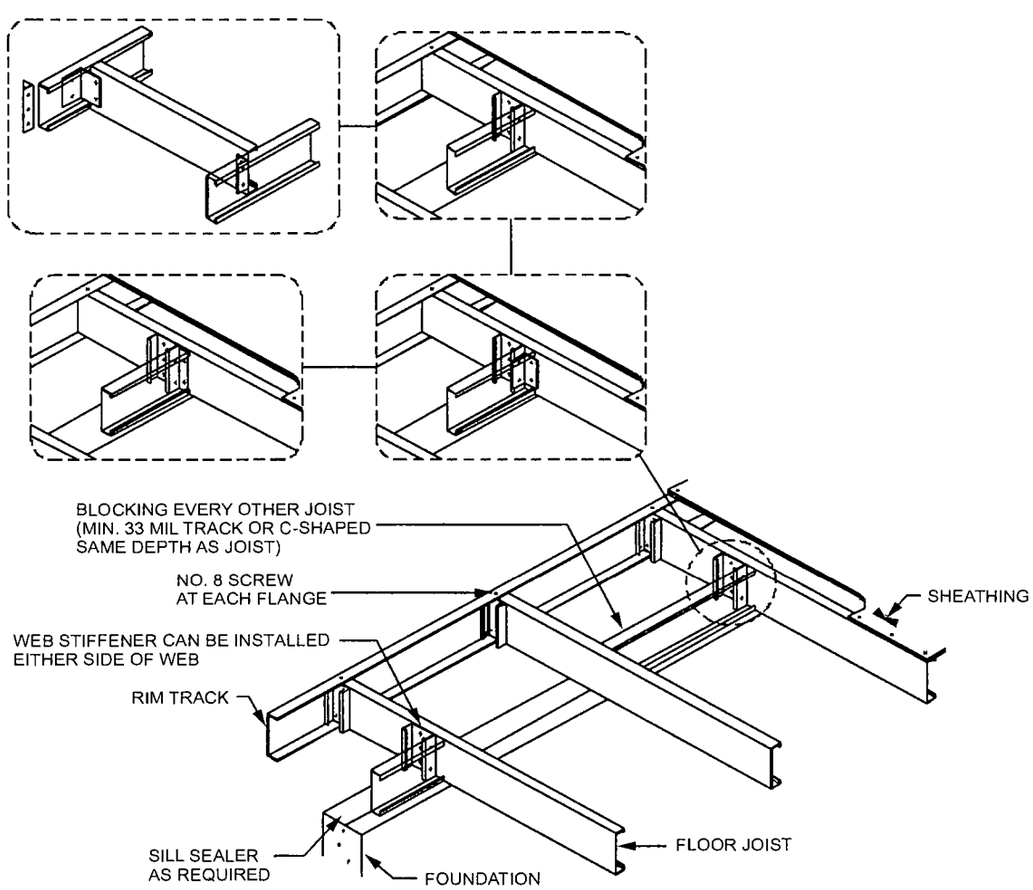

For SI: 1 mil = 0.0254 mm.

FIGURE R505.3.1(4)
CANTILEVERED FLOOR-TO-FOUNDATION CONNECTION

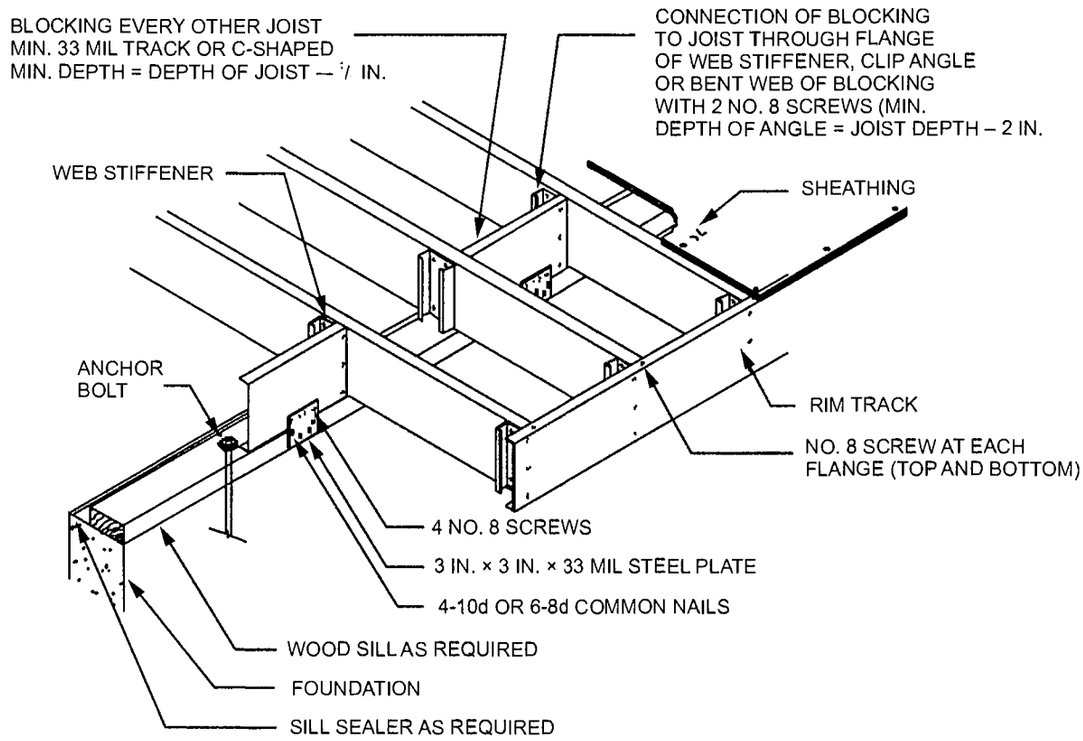

For SI: 1 mil = 0.0254 mm. 1 inch = 25.4 mm.

FIGURE R505.3.1(5)
CANTILEVERED FLOOR-TO-WOOD-SILL CONNECTION

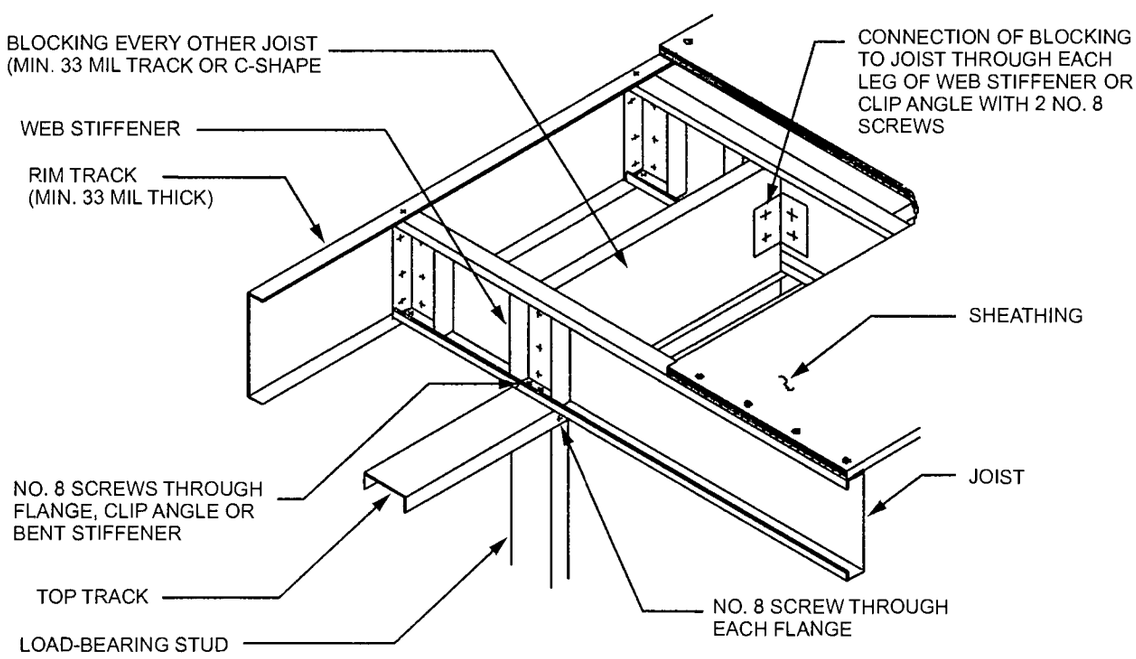

For SI: 1 mil = 0.0254 mm.

FIGURE R505.3.1(6)
CANTILEVERED FLOOR TO EXTERIOR LOAD-BEARING WALL CONNECTION

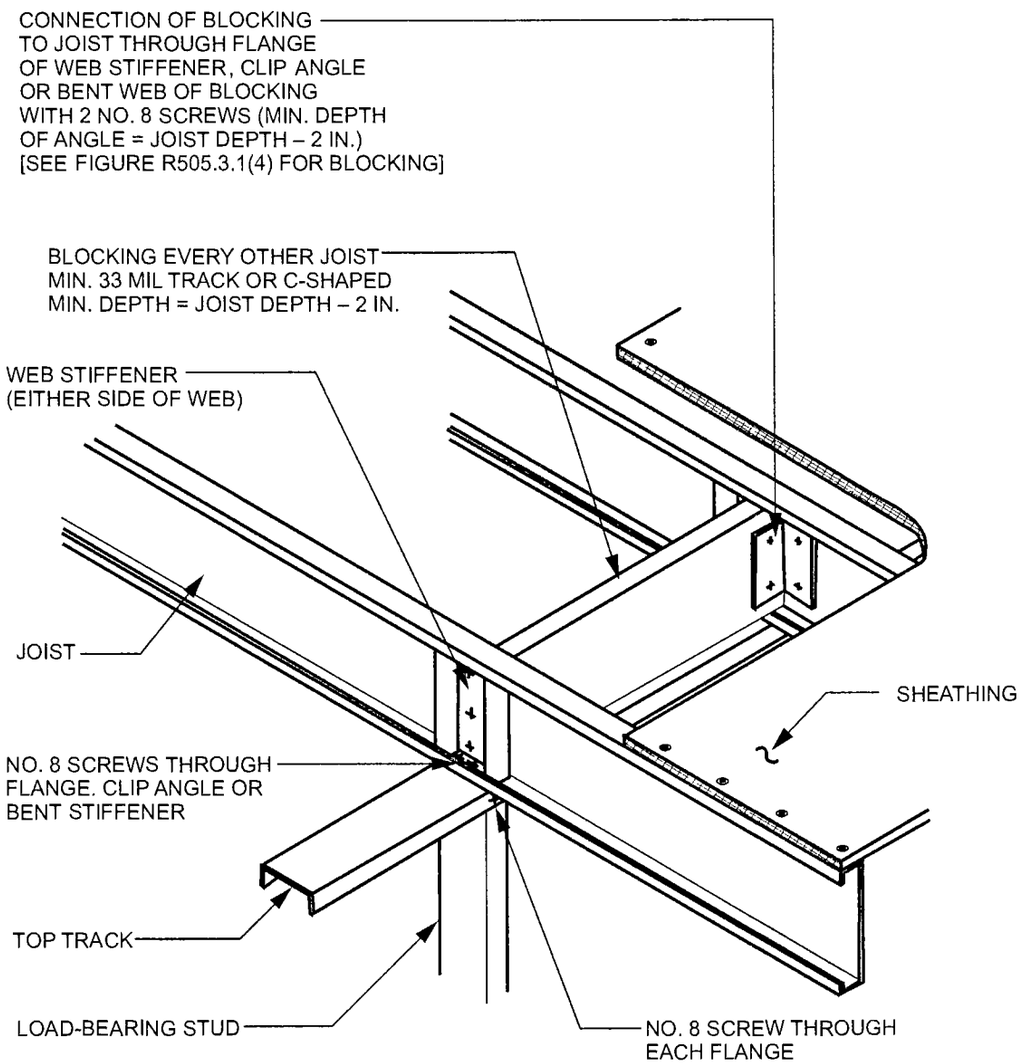

For SI. 1 mil = 0.0254 mm, 1 inch = 25.4 mm.

FIGURE R505.3.1(7)
CONTINUOUS SPAN JOIST SUPPORTED ON INTERIOR LOAD-BEARING WALL

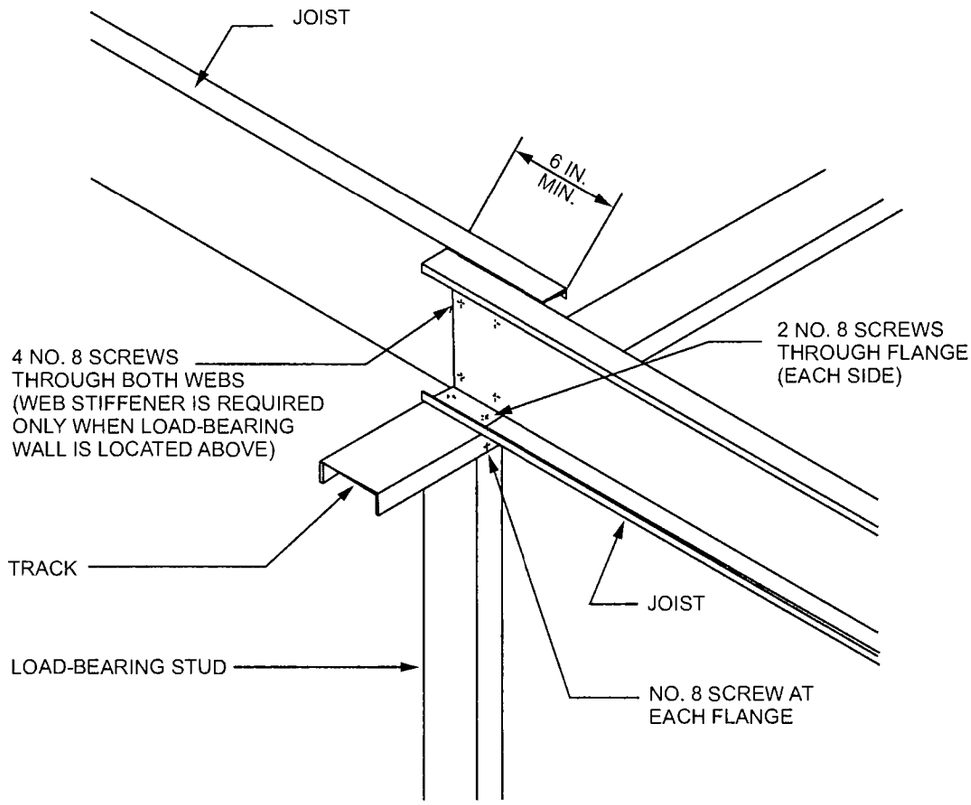

For SI: 1 inch = 25.4 mm.

FIGURE R505.3.1(8)
LAPPED JOISTS SUPPORTED ON INTERIOR LOAD-BEARING WALL

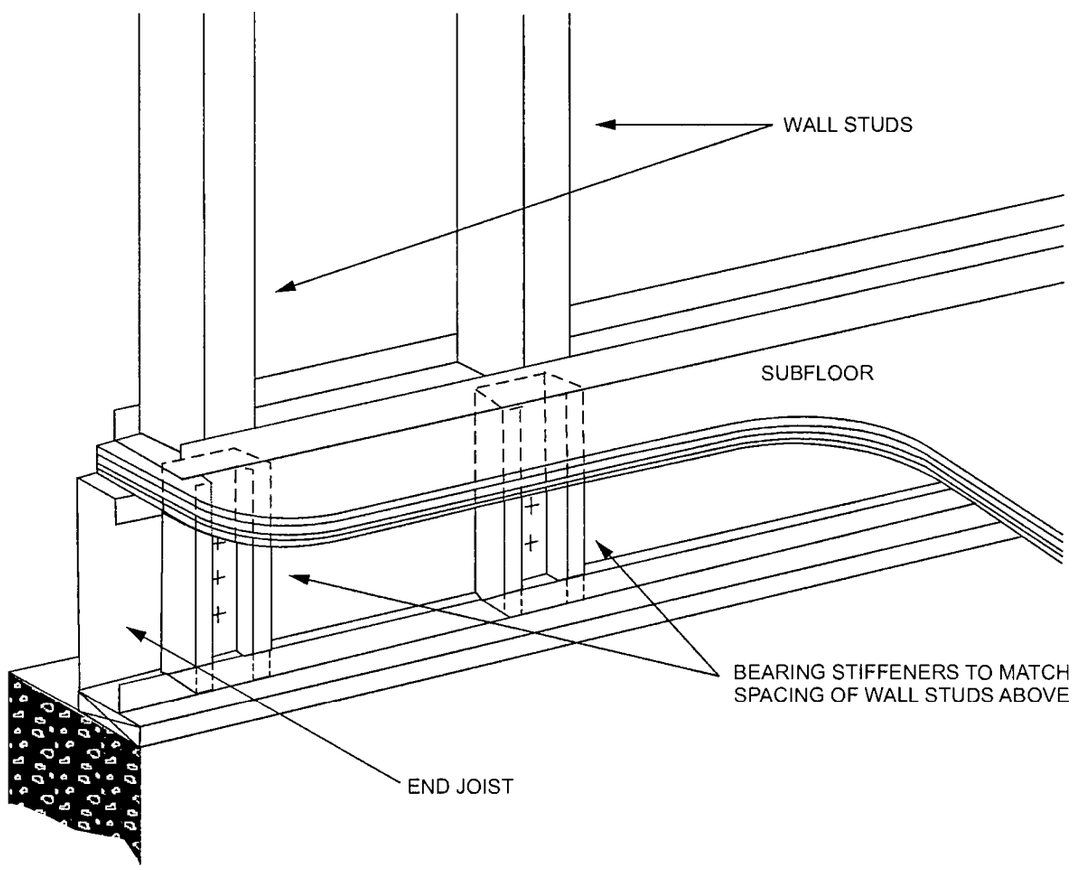

FIGURE R505.3.1(9)
BEARING STIFFENERS FOR END JOISTS

TABLE R505.3.2
ALLOWABLE SPANS FOR COLD-FORMED STEEL JOISTS—SINGLE OR CONTINUOUS SPANS[a, b, c, d, e, f]

JOIST DESIGNATION	30 PSF LIVE LOAD				40 PSF LIVE LOAD			
	Spacing (inches)				Spacing (inches)			
	12	16	19.2	24	12	16	19.2	24
550S162-33	11′-8″	10′-4″	9′-5″	8′-5″	10′-7″	9′-2″	8′-5″	7′-6″
550S162-43	12′-8″	11′-6″	10′-8″	10′-5″	11′-6″	10′-4″	9′-10″	9′-3″
550S162-54	13′-7″	12′-4″	11′-7″	10′-9″	12′-4″	11′-3″	10′-7″	9′-10″
550S162-68	14′-7″	13′-3″	12′-6″	11′-7″	13′-3″	12′-0″	11′-4″	10′-6″
800S162-33	14′-6″	12′-6″	11′-5″	10′-3″	12′-10″	11′-1″	10′-2″	9′-1″
800S162-43	17′-0″	15′-1″	13′-9″	12′-4″	15′-5″	13′-5″	12′-3″	10′-11″
800S162-54	18′-3″	16′-7″	15′-8″	14′-6″	16′-7″	15′-1″	14′-2″	13′-2″
800S162-68	19′-9″	17′-11″	16′-11″	15′-8″	17′-11″	16′-3″	15′-4″	14′-3″
1000S162-43	19′-4″	16′-9″	15′-3″	13′-8″	17′-2″	14′-10″	13′-7″	12′-2″
1000S162-54	21′-9″	19′-9″	18′-7″	17′-3″	19′-9″	18′-0″	16′-11″	15′-8″
1000S162-68	23′-7″	21′-5″	20′-2″	18′-9″	21′-5″	19′-6″	18′-4″	17′-0″
1200S162-54	25′-1″	22′-10″	21′-6″	19′-9″	22′-10″	20′-9″	19′-6″	17′-6″
1200S162-68	27′-3″	24′-9″	23′-4″	21′-8″	24′-9″	22′-6″	21′-2″	19′-8″

For SI: 1 inch = 25.4 mm, 1 foot = 304.8 mm, 1 pound per square foot = 0.0479 kPa, 1 mil = 0.0254 mm.

a. Deflection criteria: *L*/480 for live loads, *L*/240 for total loads.

b. Floor dead load = 10 psf.

c. Table provides the maximum clear span in feet and inches.

d. Bearing stiffeners are to be installed at all support points and concentrated loads.

e. Minimum Grade 33 ksi steel shall be used for 33 mil and 43 mil thickness. Minimum Grade 50 ksi steel shall be used for 54 and 68 mil thickness.

f. Table R505.3.2 is not applicable for 800S162-33 and 1000S162-43 continuous joist members.

SECTION R506
CONCRETE FLOORS (ON GROUND)

R506.1 General. Concrete slab-on-ground floors shall be designed and constructed in accordance with the provisions of this section or ACI 332. Floors shall be a minimum $3^1/_2$ inches (89 mm) thick (for expansive soils, see Section R403.1.8). The specified compressive strength of concrete shall be as set forth in Section R402.2.

R506.2 Site preparation. The area within the foundation walls shall have all vegetation, top soil and foreign material removed.

R506.2.1 Fill. Fill material shall be free of vegetation and foreign material. The fill shall be compacted to ensure uniform support of the slab, and except where approved, the fill depths shall not exceed 24 inches (610 mm) for clean sand or gravel and 8 inches (203 mm) for earth.

R506.2.2 Base. A 4-inch-thick (102 mm) base course consisting of clean graded sand, gravel, crushed stone, crushed concrete or crushed blast-furnace slag passing a 2-inch (51 mm) sieve shall be placed on the prepared subgrade where the slab is below grade.

Exception: A base course is not required where the concrete slab is installed on well-drained or sand-gravel mixture soils classified as Group I according to the United Soil Classification System in accordance with Table R405.1.

R506.2.3 Vapor retarder. A 6-mil (0.006 inch; 152 μm) polyethylene or approved vapor retarder with joints lapped not less than 6 inches (152 mm) shall be placed between the concrete floor slab and the base course or the prepared subgrade where a base course does not exist.

Exception: The vapor retarder is not required for the following:

1. Garages, utility buildings and other unheated accessory structures.
2. For unheated storage rooms having an area of less than 70 square feet (6.5 m^2) and carports.
3. Driveways, walks, patios and other flatwork not likely to be enclosed and heated at a later date.
4. Where approved by the building official, based on local site conditions.

R506.2.3.1 Capillary break. *When a vapor retarder is required, a capillary break shall be installed in accordance with the California Green Building Standards Code, Chapter 4, Division 4.5.*

R506.2.4 Reinforcement support. Where provided in slabs-on-ground, reinforcement shall be supported to remain in place from the center to upper one-third of the slab for the duration of the concrete placement.

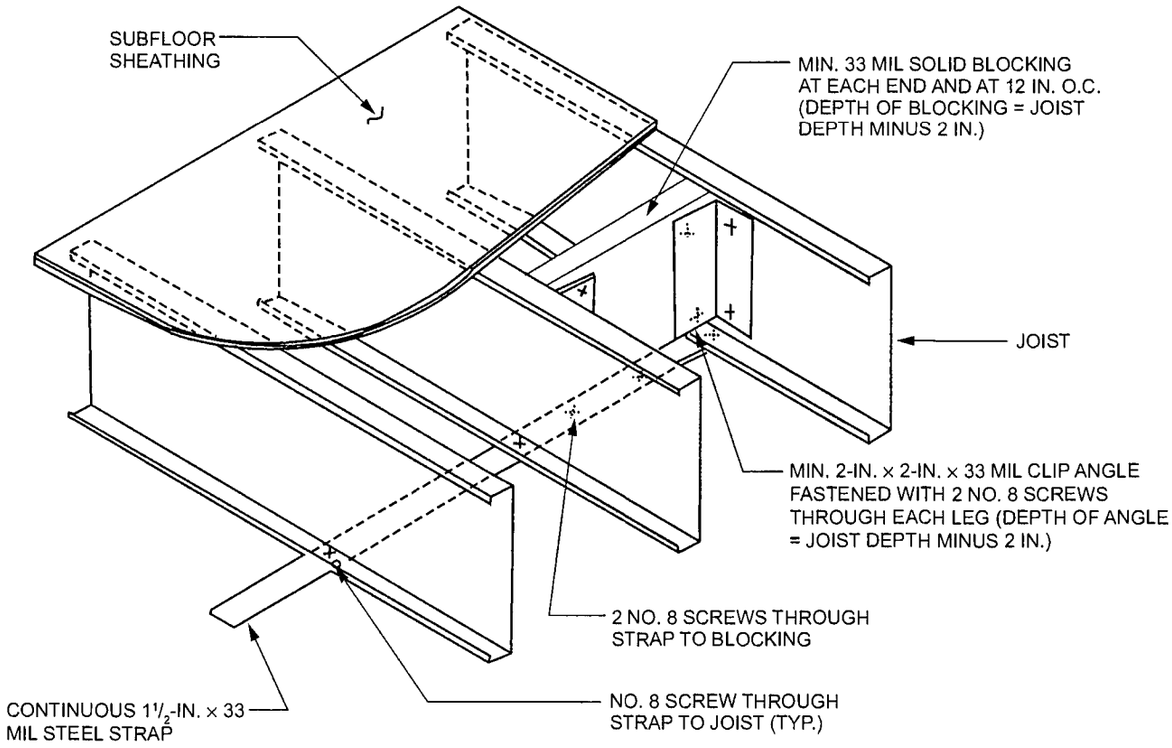

For SI: 1 mil = 0.0254, 1 inch = 25.4 mm.

FIGURE R505.3.3.2(1)
JOIST BLOCKING (SOLID)

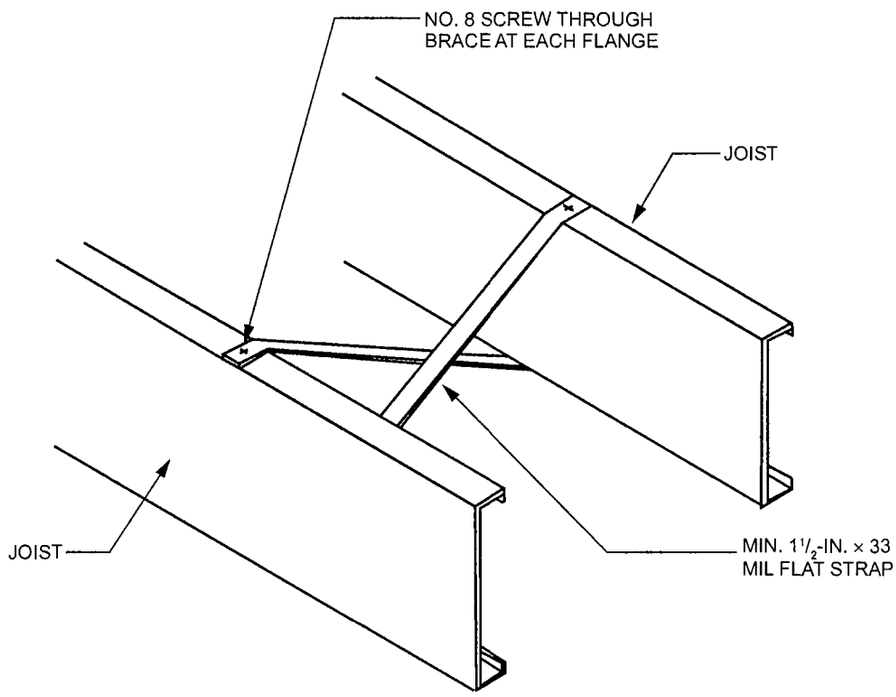

For SI: 1 mil = 0.0254, 1 inch = 25.4 mm.

FIGURE R505.3.3.2(2)
JOIST BLOCKING (STRAP)

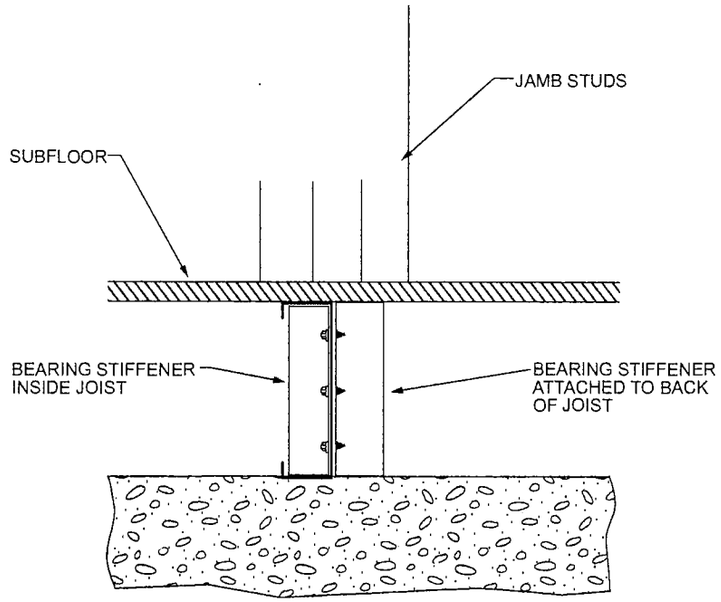

FIGURE R505.3.4(1)
BEARING STIFFENERS UNDER JAMB STUDS

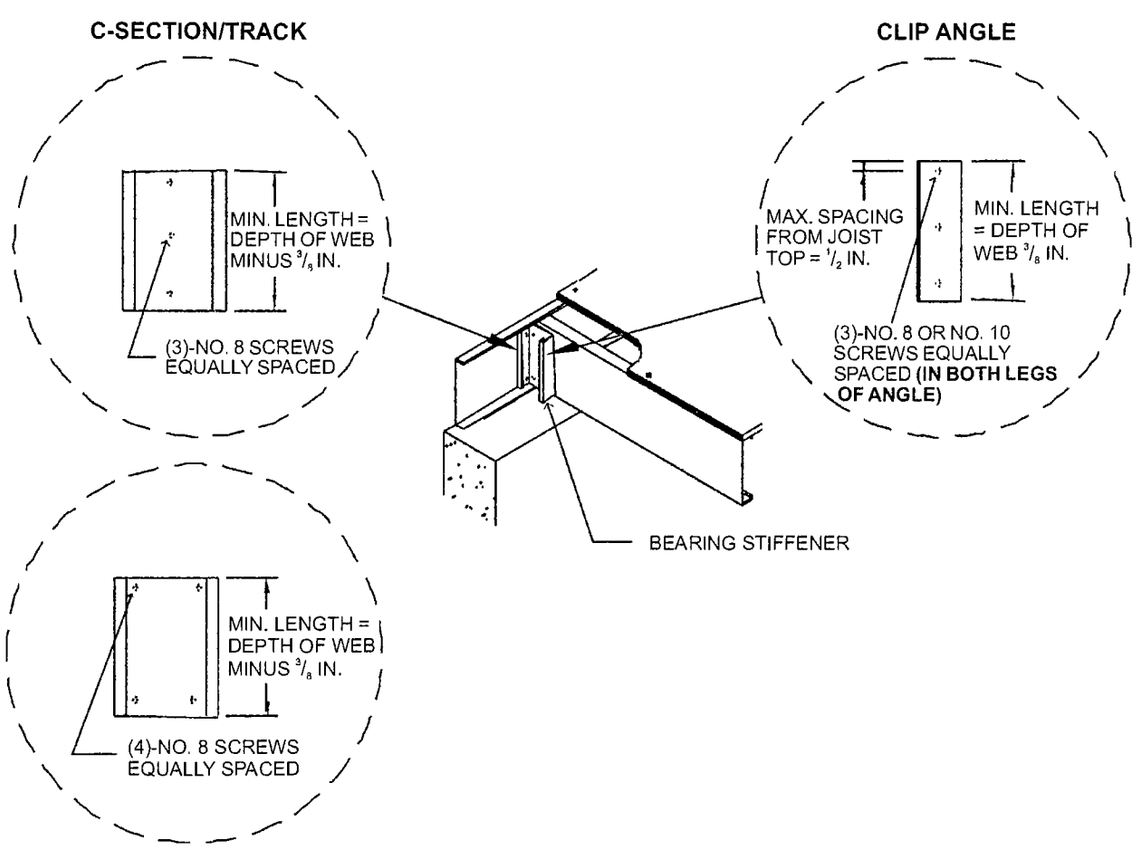

For SI: 1 inch = 25.4 mm.

FIGURE R505.3.4(2)
BEARING STIFFENER

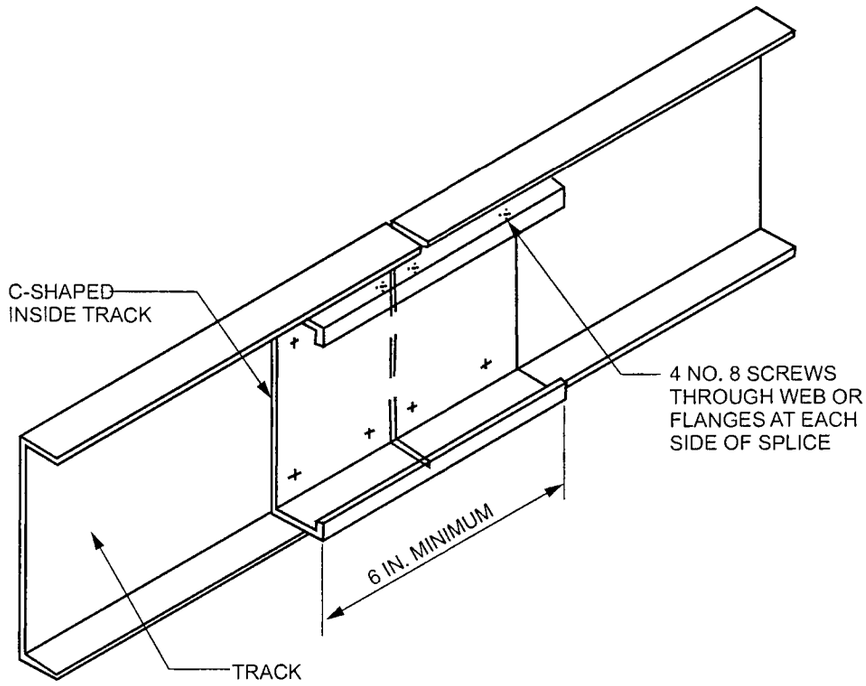

For SI: 1 inch = 25.4 mm.

FIGURE R505.3.7
TRACK SPLICE

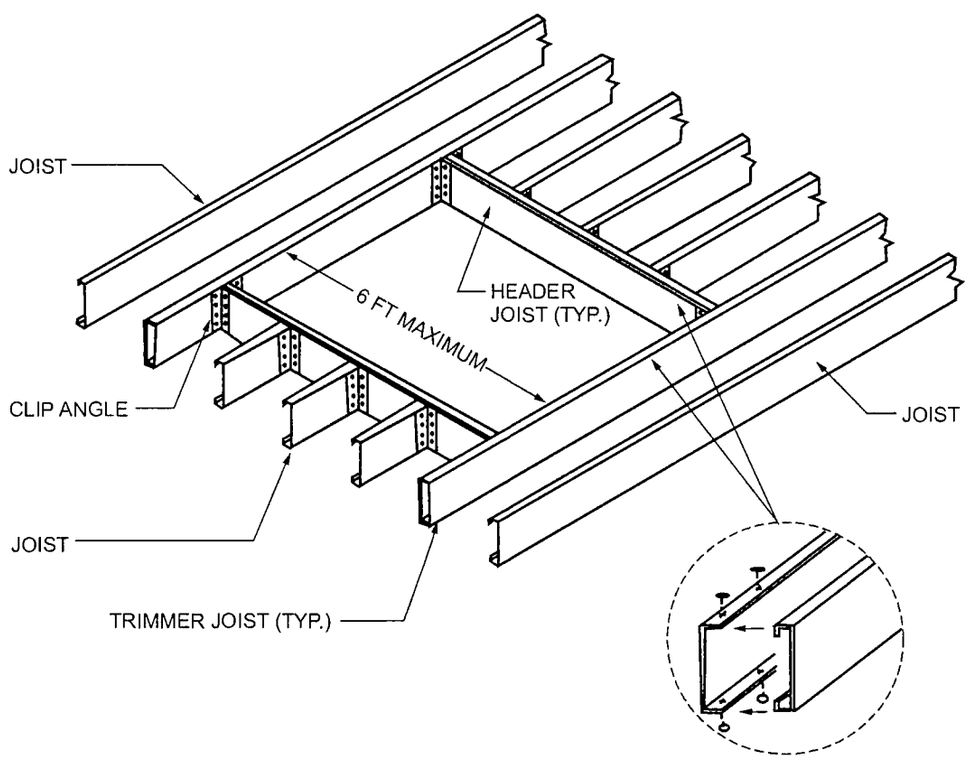

For SI: 1 foot = 304.8 mm.

FIGURE R505.3.8(1)
COLD-FORMED STEEL FLOOR CONSTRUCTION—6-FOOT FLOOR OPENING

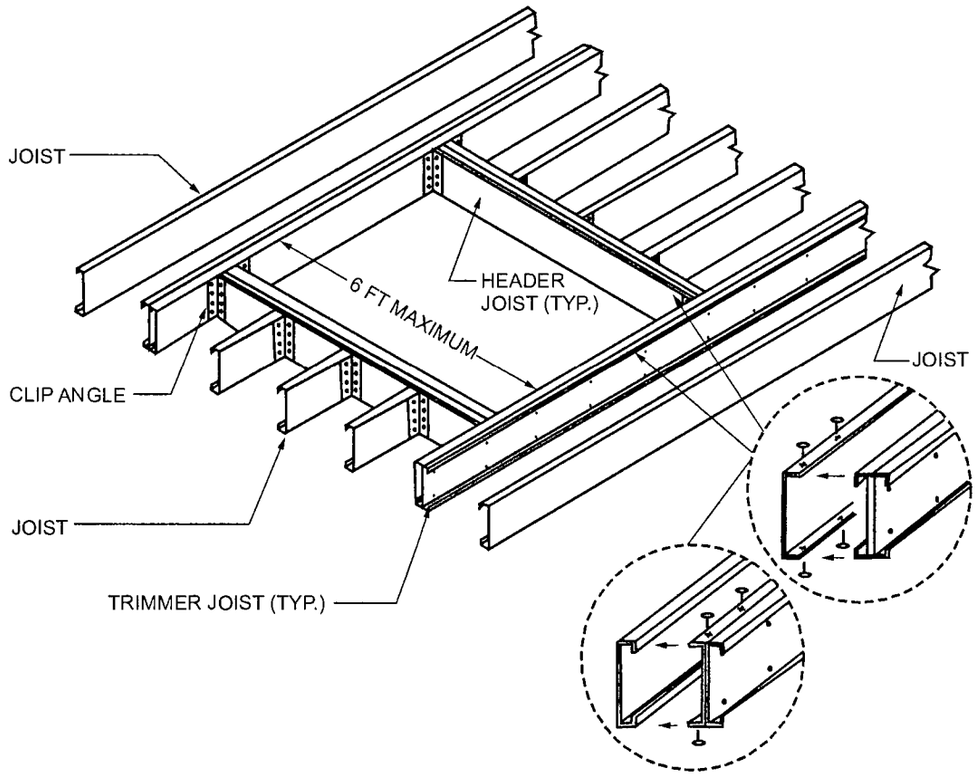

For SI: 1 foot = 304.8 mm.

FIGURE R505.3.8(2)
COLD-FORMED STEEL FLOOR CONSTRUCTION—8-FOOT FLOOR OPENING

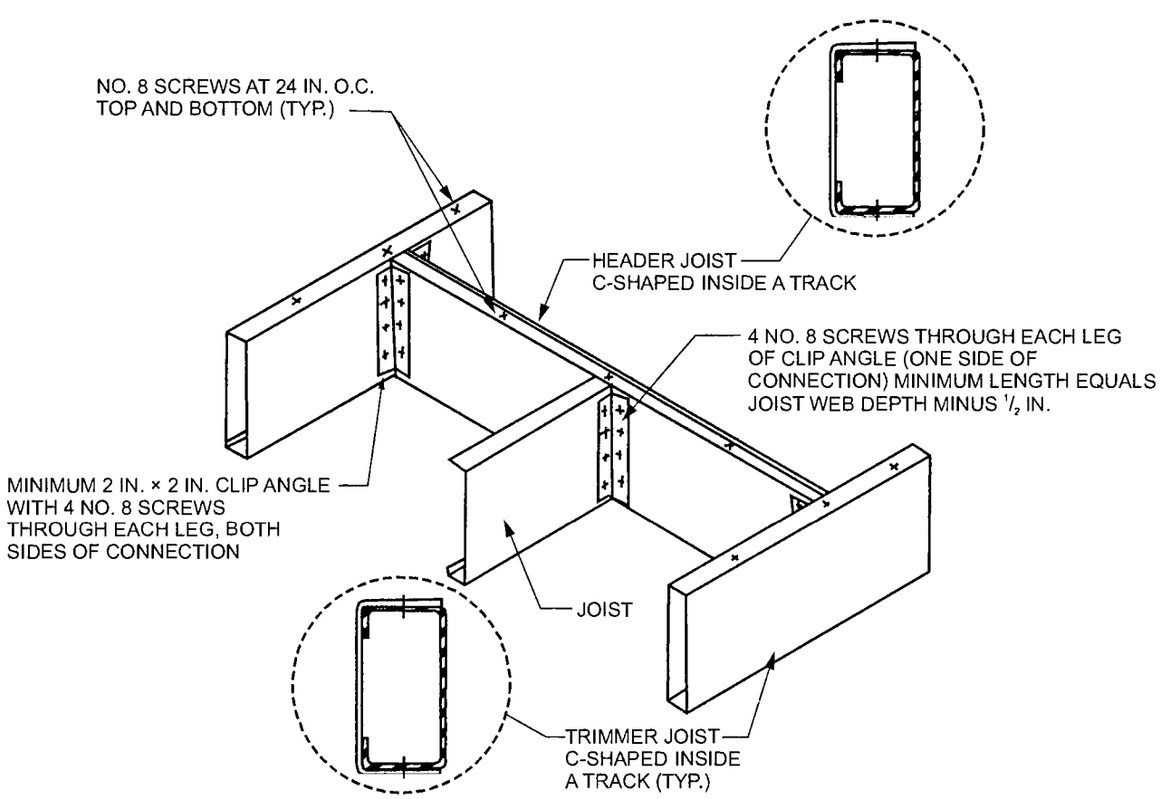

For SI: 1 inch = 25.4 mm, 1 foot = 304.8 mm.

FIGURE R505.3.8(3)
COLD-FORMED STEEL FLOOR CONSTRUCTION: FLOOR HEADER TO TRIMMER CONNECTION—6-FOOT OPENING

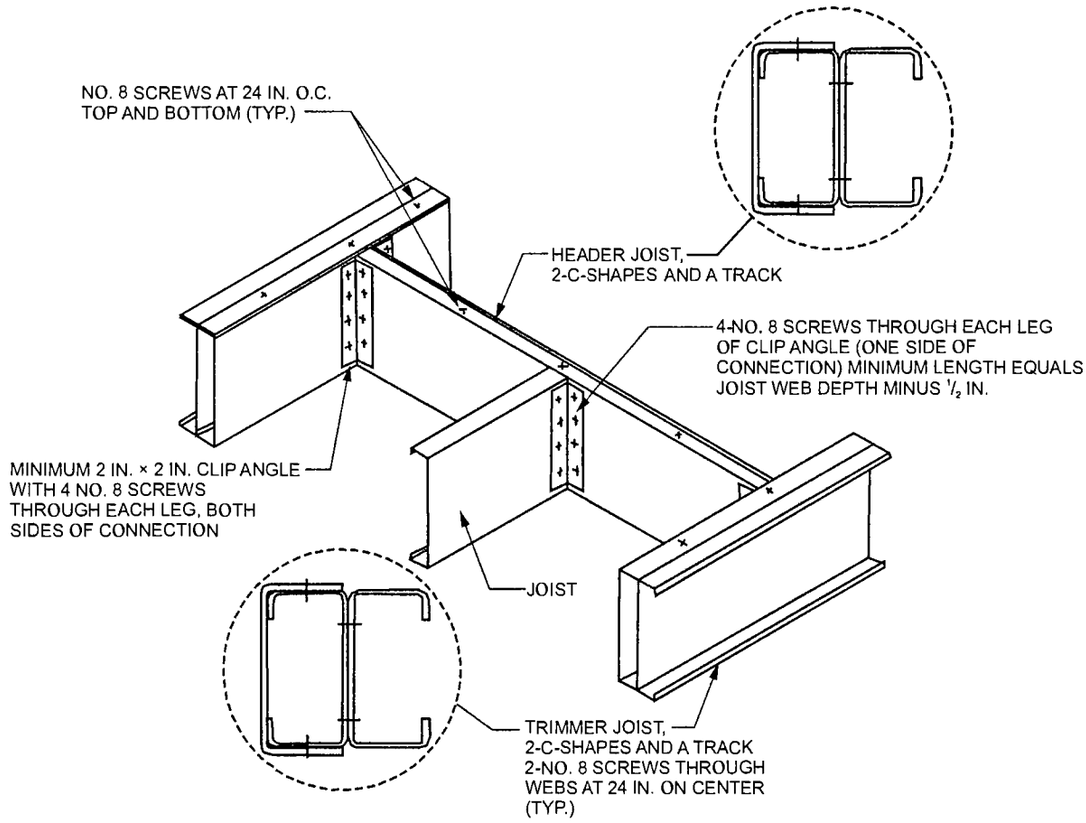

For SI: 1 inch = 25.4 mm, 1 foot = 304.8 mm.

FIGURE R505.3.8(4)
COLD-FORMED STEEL FLOOR CONSTRUCTION: FLOOR HEADER TO TRIMMER CONNECTION—8-FOOT OPENING

SECTION R507
EXTERIOR DECKS

R507.1 Decks. Wood-framed decks shall be in accordance with this section. For decks using materials and conditions not prescribed in this section, refer to Section R301.

R507.2 Materials. Materials used for the construction of decks shall comply with this section.

R507.2.1 Wood materials. Wood materials shall be No. 2 grade or better lumber, preservative-treated in accordance with Section R317, or approved, naturally durable lumber, and termite protected where required in accordance with Section R318. Where design in accordance with Section R301 is provided, wood structural members shall be designed using the wet service factor defined in AWC NDS. Cuts, notches and drilled holes of preservative-treated wood members shall be treated in accordance with Section R317.1.1. All preservative-treated wood products in contact with the ground shall be labeled for such usage.

R507.2.1.1 Engineered wood products. Engineered wood products shall be in accordance with Section R502.

R507.2.2 Plastic composite deck boards, stair treads, guards, or handrails. Plastic composite exterior deck boards, stair treads, guards and handrails shall comply with the requirements of ASTM D7032 and this section.

R507.2.2.1 Labeling. Plastic composite deck boards and stair treads, or their packaging, shall bear a label that indicates compliance with ASTM D7032 and includes the allowable load and maximum allowable span determined in accordance with ASTM D7032. Plastic or composite handrails and guards, or their packaging, shall bear a label that indicates compliance with ASTM D7032 and includes the maximum allowable span determined in accordance with ASTM D7032.

R507.2.2.2 Flame spread index. Plastic composite deck boards, stair treads, guards, and handrails shall exhibit a flame spread index not exceeding 200 when tested in accordance with ASTM E84 or UL 723 with the test specimen remaining in place during the test.

Exception: Plastic composites determined to be noncombustible.

R507.2.2.3 Decay resistance. Plastic composite deck boards, stair treads, guards and handrails containing wood, cellulosic or other biodegradable materials shall be decay resistant in accordance with ASTM D7032.

R507.2.2.4 Termite resistance. Where required by Section 318, plastic composite deck boards, stair treads, guards and handrails containing wood, cellulosic or other biodegradable materials shall be termite resistant in accordance with ASTM D7032.

R507.2.2.5 Installation of plastic composites. Plastic composite deck boards, stair treads, guards and handrails shall be installed in accordance with this code and the manufacturer's instructions.

R507.2.3 Fasteners and connectors. Metal fasteners and connectors used for all decks shall be in accordance with Section R317.3 and Table R507.2.3.

R507.2.4 Flashing. Flashing shall be corrosion-resistant metal of nominal thickness not less than 0.019 inch (0.48 mm) or approved nonmetallic material that is compatible with the substrate of the structure and the decking materials.

R507.2.5 Alternate materials. Alternative materials, including glass and metals, shall be permitted.

R507.3 Footings. Decks shall be supported on concrete footings or other approved structural systems designed to accommodate all loads in accordance with Section R301. Deck footings shall be sized to carry the imposed loads from the deck structure to the ground as shown in Figure R507.3. The footing depth shall be in accordance with Section R403.1.4.

Exception: Free-standing decks consisting of joists directly supported on grade over their entire length.

R507.3.1 Minimum size. The minimum size of concrete footings shall be in accordance with Table R507.3.1, based on the tributary area and allowable soil-bearing pressure in accordance with Table R401.4.1.

R507.3.2 Minimum depth. Deck footings shall extend below the frost line specified in Table R301.2(1) in accordance with Section R403.1.4.1.

Exceptions:

1. Free-standing decks that meet all of the following criteria:
   1.1. The joists bear directly on precast concrete pier blocks at grade without support by beams or posts.
   1.2. The area of the deck does not exceed 200 square feet (18.9 m^2).
   1.3. The walking surface is not more than 20 inches (616 mm) above grade at any point within 36 inches (914 mm) measured horizontally from the edge.
2. Free-standing decks need not be provided with footings that extend below the frost line.

R507.4 Deck posts. For single-level wood-framed decks with beams sized in accordance with Table R507.5, deck post size shall be in accordance with Table R507.4.

TABLE R507.4
DECK POST HEIGHT[a]

DECK POST SIZE	MAXIMUM HEIGHT[a, b] (feet-inches)
4 × 4	6-9[c]
4 × 6	8
6 × 6	14
8 × 8	14

For SI: 1 inch = 25.4 mm, 1 foot = 304.8 mm, 1 pound per square foot = 0.0479 kPa.

a. Measured to the underside of the beam.

b. Based on 40 psf live load.

c. The maximum permitted height is 8 feet for one-ply and two-ply beams. The maximum permitted height for three-ply beams on post cap is 6 feet 9 inches.

R507.4.1 Deck post to deck footing connection. Where posts bear on concrete footings in accordance with Section R403 and Figure R507.4.1, lateral restraint shall be provided by manufactured connectors or a minimum post embedment of 12 inches (305 mm) in surrounding soils or concrete piers. Other footing systems shall be permitted.

Exception: Where expansive, compressible, shifting or other questionable soils are present, surrounding soils shall not be relied on for lateral support.

R507.5 Deck Beams. Maximum allowable spans for wood deck beams, as shown in Figure R507.5, shall be in accordance with Table R507.5. Beam plies shall be fastened with two rows of 10d (3-inch × 0.128-inch) nails minimum at 16 inches (406 mm) on center along each edge. Beams shall be

TABLE R507.2.3
FASTENER AND CONNECTOR SPECIFICATIONS FOR DECKS[a, b]

ITEM	MATERIAL	MINIMUM FINISH/COATING	ALTERNATE FINISH/COATING[e]
Nails and timber rivets	In accordance with ASTM F1667	Hot-dipped galvanized per ASTM A153	Stainless steel, silicon bronze or copper
Bolts[c] Lag screws[d] (including nuts and washers)	In accordance with ASTM A307 (bolts), ASTM A563 (nuts), ASTM F844 (washers)	Hot-dipped galvanized per ASTM A153, Class C (Class D for $^3/_8$-inch diameter and less) or mechanically galvanized per ASTM B695, Class 55 or 410 stainless steel	Stainless steel, silicon bronze or copper
Metal connectors	Per manufacturer's specification	ASTM A653 type G185 zinc coated galvanized steel or post hot-dipped galvanized per ASTM A123 providing a minimum average coating weight of 2.0 oz./ft^2 (total both sides)	Stainless steel

For SI: 1 inch = 25.4 mm, 1 foot = 304.8 mm.

a. Equivalent materials, coatings and finishes shall be permitted.

b. Fasteners and connectors exposed to salt water or located within 300 feet of a salt water shoreline shall be stainless steel.

c. Holes for bolts shall be drilled a minimum $^1/_{32}$ inch and a maximum $^1/_{16}$ inch larger than the bolt.

d. Lag screws $^1/_2$ inch and larger shall be predrilled to avoid wood splitting per the National Design Specification (NDS) for Wood Construction.

e. Stainless-steel-driven fasteners shall be in accordance with ASTM F1667.

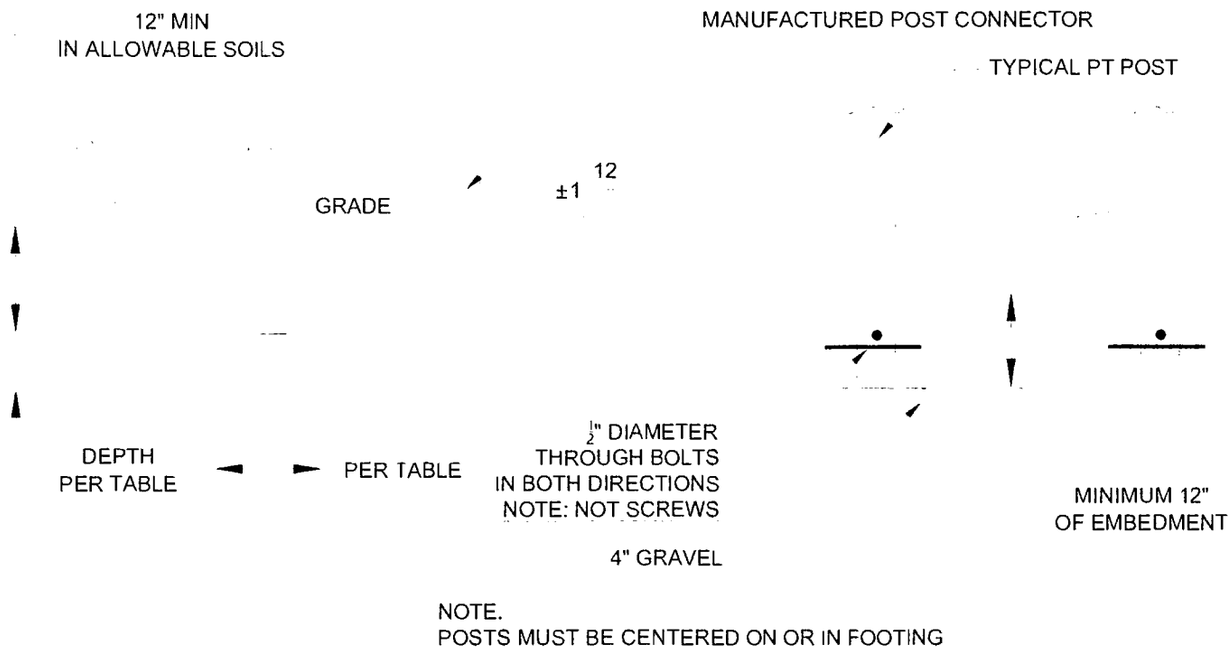

For SI: 1 inch = 25.4 mm.

FIGURE R507.3
DECK POSTS TO DECK FOOTING CONNECTION

permitted to cantilever at each end up to one-fourth of the allowable beam span. Deck beams of other materials shall be permitted where designed in accordance with accepted engineering practices.

R507.5.1 Deck beam bearing. The ends of beams shall have not less than $1^1/_2$ inches (38 mm) of bearing on wood or metal and not less than 3 inches (76 mm) of bearing on concrete or masonry for the entire width of the beam. Where multiple-span beams bear on intermediate posts, each ply must have full bearing on the post in accordance with Figures R507.5.1(1) and R507.5.1(2).

R507.5.2 Deck beam connection to supports. Deck beams shall be attached to supports in a manner capable of transferring vertical loads and resisting horizontal displacement. Deck beam connections to wood posts shall be in accordance with Figures R507.5.1(1) and R507.5.1(2). Manufactured post-to-beam connectors shall be sized for the post and beam sizes. Bolts shall have washers under the head and nut.

R507.6 Deck joists. Maximum allowable spans for wood deck joists, as shown in Figure R507.6, shall be in accordance with Table R507.6. The maximum joist spacing shall be limited by the decking materials in accordance with Table R507.7. The maximum joist cantilever shall be limited to one-fourth of the joist span or the maximum cantilever length specified in Table R507.6, whichever is less.

R507.6.1 Deck joist bearing. The ends of joists shall have not less than $1^1/_2$ inches (38 mm) of bearing on wood or metal and not less than 3 inches (76 mm) of bearing on concrete or masonry over its entire width. Joists bearing on top of a multiple-ply beam or ledger shall be fastened in accordance with Table R602.3(1). Joists bearing on top of a single-ply beam or ledger shall be attached by a mechanical connector. Joist framing into the side of a beam or ledger board shall be supported by approved joist hangers.

R507.6.2 Deck joist lateral restraint. Joist ends and bearing locations shall be provided with lateral resistance to prevent rotation. Where lateral restraint is provided by joist hangers or blocking between joists, their depth shall equal not less than 60 percent of the joist depth. Where lateral restraint is provided by rim joists, they shall be secured to the end of each joist with not fewer than three 10d (3-inch by 0.128-inch) (76 mm by 3.3 mm) nails or three No. 10x 3-inch (76 mm) long wood screws.

R507.7 Decking. Maximum allowable spacing for joists supporting decking shall be in accordance with Table R507.7. Wood decking shall be attached to each supporting member with not less than two 8d threaded nails or two No. 8 wood screws. Other approved decking or fastener systems shall be installed in accordance with the manufacturer's installation requirements.

TABLE R507.3.1
MINIMUM FOOTING SIZE FOR DECKS

LIVE OR GROUND SNOW LOAD[b] (psf)	TRIBUTARY AREA (sq. ft.)	LOAD BEARING VALUE OF SOILS [a, c, d] (psf)											
		1500[e]			2000[e]			2500[e]			≥ 3000[e]		
		Side of a square footing (inches)	Diameter of a round footing (inches)	Thickness (inches)	Side of a square footing (inches)	Diameter of a round footing (inches)	Thickness (inches)	Side of a square footing (inches)	Diameter of a round footing (inches)	Thickness (inches)	Side of a square footing (inches)	Diameter of a round footing (inches)	Thickness (inches)
40	20	12	14	6	12	14	6	12	14	6	12	14	6
	40	14	16	6	12	14	6	12	14	6	12	14	6
	60	17	19	6	15	17	6	13	15	6	12	14	6
	80	20	22	7	17	19	6	15	17	6	14	16	6
	100	22	25	8	19	21	6	17	19	6	15	17	6
	120	24	27	9	21	23	7	19	21	6	17	19	6
	140	26	29	10	22	25	8	20	23	7	18	21	6
	160	28	31	11	24	27	9	21	24	8	20	22	7
50	20	12	14	6	12	14	6	12	14	6	12	14	6
	40	15	17	6	13	15	6	12	14	6	12	14	6
	60	19	21	6	16	18	6	14	16	6	13	15	6
	80	21	24	8	19	21	6	17	19	6	15	17	6
	100	24	27	9	21	23	7	19	21	6	17	19	6
	120	26	30	10	23	26	8	20	23	7	19	21	6
	140	28	32	11	25	28	9	22	25	8	20	23	7
	160	30	34	12	26	30	10	24	27	9	21	24	8
60	20	12	14	6	12	14	6	12	14	6	12	14	6
	40	16	19	6	14	16	6	13	14	6	12	14	6
	60	20	23	7	17	20	6	16	18	6	14	16	6
	80	23	26	9	20	23	7	18	20	6	16	19	6
	100	26	29	10	22	25	8	20	23	7	18	21	6
	120	28	32	11	25	28	9	22	25	8	20	23	7
	140	31	35	12	27	30	10	24	27	9	22	24	8
	160	33	37	13	28	32	11	25	29	10	23	26	9
70	20	12	14	6	12	14	6	12	14	6	12	14	6
	40	18	20	6	15	17	6	14	15	6	12	14	6
	60	21	24	8	19	21	6	17	19	6	15	17	6
	80	25	28	9	21	24	8	19	22	7	18	20	6
	100	28	31	11	24	27	9	21	24	8	20	22	7
	120	30	34	12	26	30	10	24	27	9	21	24	8
	140	33	37	13	28	32	11	25	29	10	23	26	9
	160	35	40	15	30	34	12	27	31	11	25	28	9

For SI: 1 inch = 25.4 mm, 1 square foot = 0.0929 m^2, 1 pound per square foot = 0.0479 kPa.

a. Interpolation permitted, extrapolation not permitted.

b. Based on highest load case: Dead + Live or Dead + Snow.

c. Assumes minimum square footing to be 12 inches x 12 inches x 6 inches for 6 x 6 post.

d. If the support is a brick or CMU pier, the footing shall have a minimum 2-inch projection on all sides.

e. Area, in square feet, of deck surface supported by post and footings.

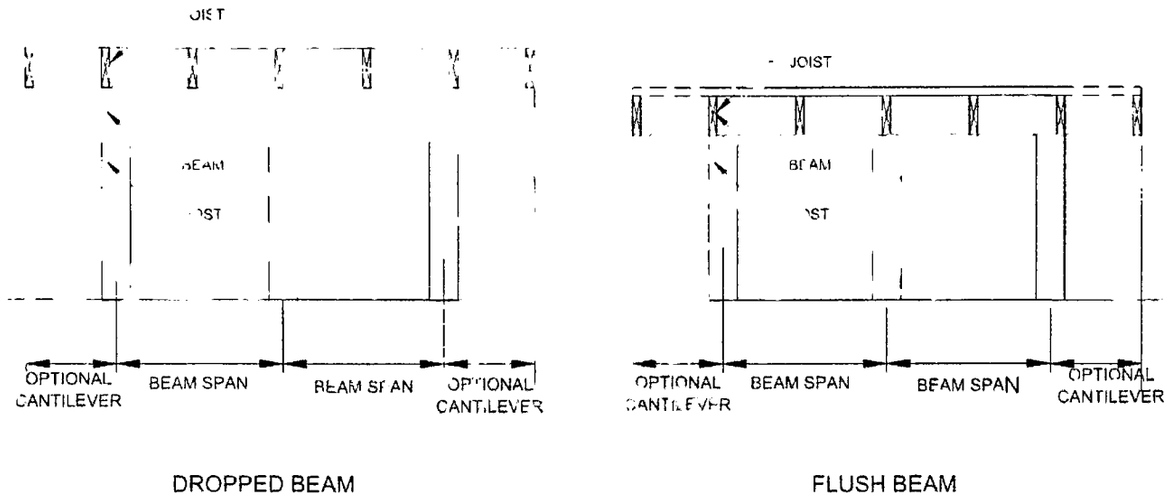

FIGURE R507.5
TYPICAL DECK JOIST SPANS

TABLE R507.5
DECK BEAM SPAN LENGTHS[a, b, g] (feet - inches)

SPECIES[c]	SIZE[d]	DECK JOIST SPAN LESS THAN OR EQUAL TO: (feet)						
		6	8	10	12	14	16	18
Southern pine	1 – 2 × 6	4-11	4-0	3-7	3-3	3-0	2-10	2-8
	1 – 2 × 8	5-11	5-1	4-7	4-2	2-10	3-7	3-5
	1 – 2 × 10	7-0	6-0	5-5	4-11	4-7	4-3	4-0
	1 – 2 × 12	8-3	7-1	6-4	5-10	5-5	5-0	4-9
	2 – 2 × 6	6-11	5-11	5-4	4-10	4-6	4-3	4-0
	2 – 2 × 8	8-9	7-7	6-9	6-2	5-9	5-4	5-0
	2 – 2 × 10	10-4	9-0	8-0	7-4	6-9	6-4	6-0
	2 – 2 × 12	12-2	10-7	9-5	8-7	8-0	7-6	7-0
	3 – 2 × 6	8-2	7-5	6-8	6-1	5-8	5-3	5-0
	3 – 2 × 8	10-10	9-6	8-6	7-9	7-2	6-8	6-4
	3 – 2 × 10	13-0	11-3	10-0	9-2	8-6	7-11	7-6
	3 – 2 × 12	15-3	13-3	11-10	10-9	10-0	9-4	8-10
Douglas fir-larch[e], hem-fir[e], spruce-pine-fir[e], redwood, western cedars, ponderosa pine[f], red pine[f]	3 × 6 or 2 – 2 x 6	5-5	4-8	4-2	3-10	3-6	3-1	2-9
	3 × 8 or 2 – 2 × 8	6-10	5-11	5-4	4-10	4-6	4-1	3-8
	3 × 10 or 2 – 2 × 10	8-4	7-3	6-6	5-11	5-6	5-1	4-8
	3 × 12 or 2 – 2 × 12	9-8	8-5	7-6	6-10	6-4	5-11	5-7
	4 × 6	6-5	5-6	4-11	4-6	4-2	3-11	3-8
	4 × 8	8-5	7-3	6-6	5-11	5-6	5-2	4-10
	4 × 10	9-11	8-7	7-8	7-0	6-6	6-1	5-8
	4 × 12	11-5	9-11	8-10	8-1	7-6	7-0	6-7
	3 – 2 × 6	7-4	6-8	6-0	5-6	5-1	4-9	4-6
	3 – 2 × 8	9-8	8-6	7-7	6-11	6-5	6-0	5-8
	3 – 2 × 10	12-0	10-5	9-4	8-6	7-10	7-4	6-11
	3 – 2 × 12	13-11	12-1	10-9	9-10	9-1	8-6	8-1

For SI: 1 inch = 25.4 mm, 1 foot = 304.8 mm, 1 pound per square foot = 0.0479 kPa, 1 pound = 0.454 kg.

a. Ground snow load, live load = 40 psf, dead load = 10 psf, L/Δ = 360 at main span, L/Δ = 180 at cantilever with a 220-pound point load applied at the end.

b. Beams supporting deck joists from one side only.

c. No. 2 grade, wet service factor.

d. Beam depth shall be greater than or equal to depth of joists with a flush beam condition.

e. Includes incising factor.

f. Northern species. Incising factor not included.

g. Beam cantilevers are limited to the adjacent beam's span divided by 4.

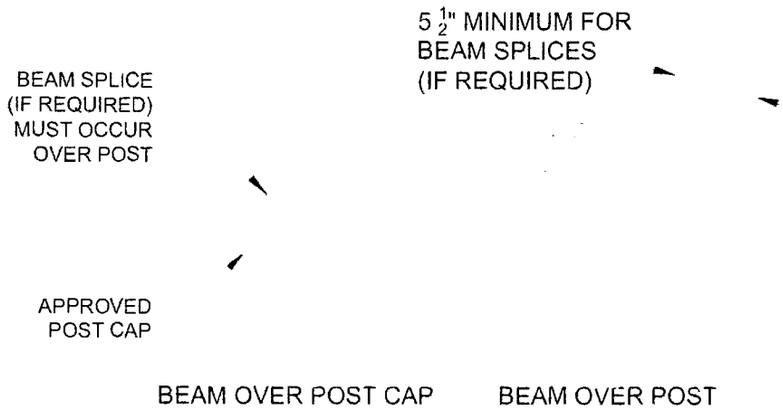

For SI: 1 inch = 25.4 mm.

FIGURE R507.5.1(1)
DECK BEAM TO DECK POST

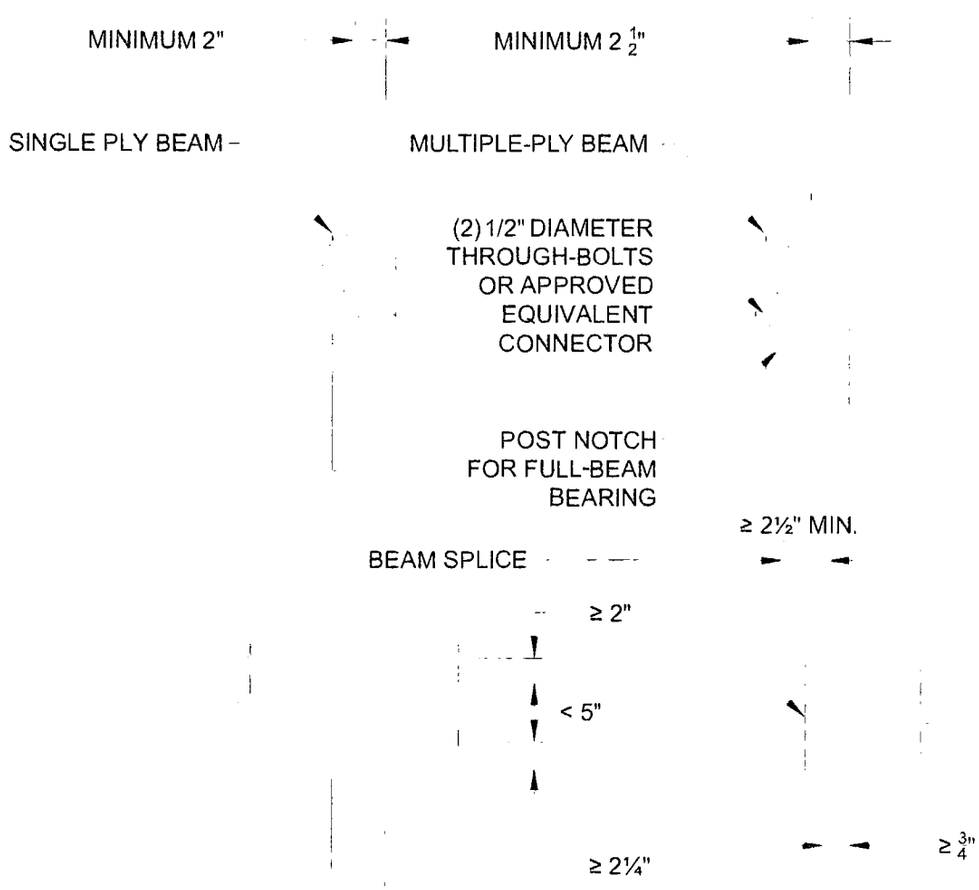

For SI: 1 inch = 25.4 mm.

FIGURE R507.5.1(2)
NOTCHED POST-TO-BEAM CONNECTION

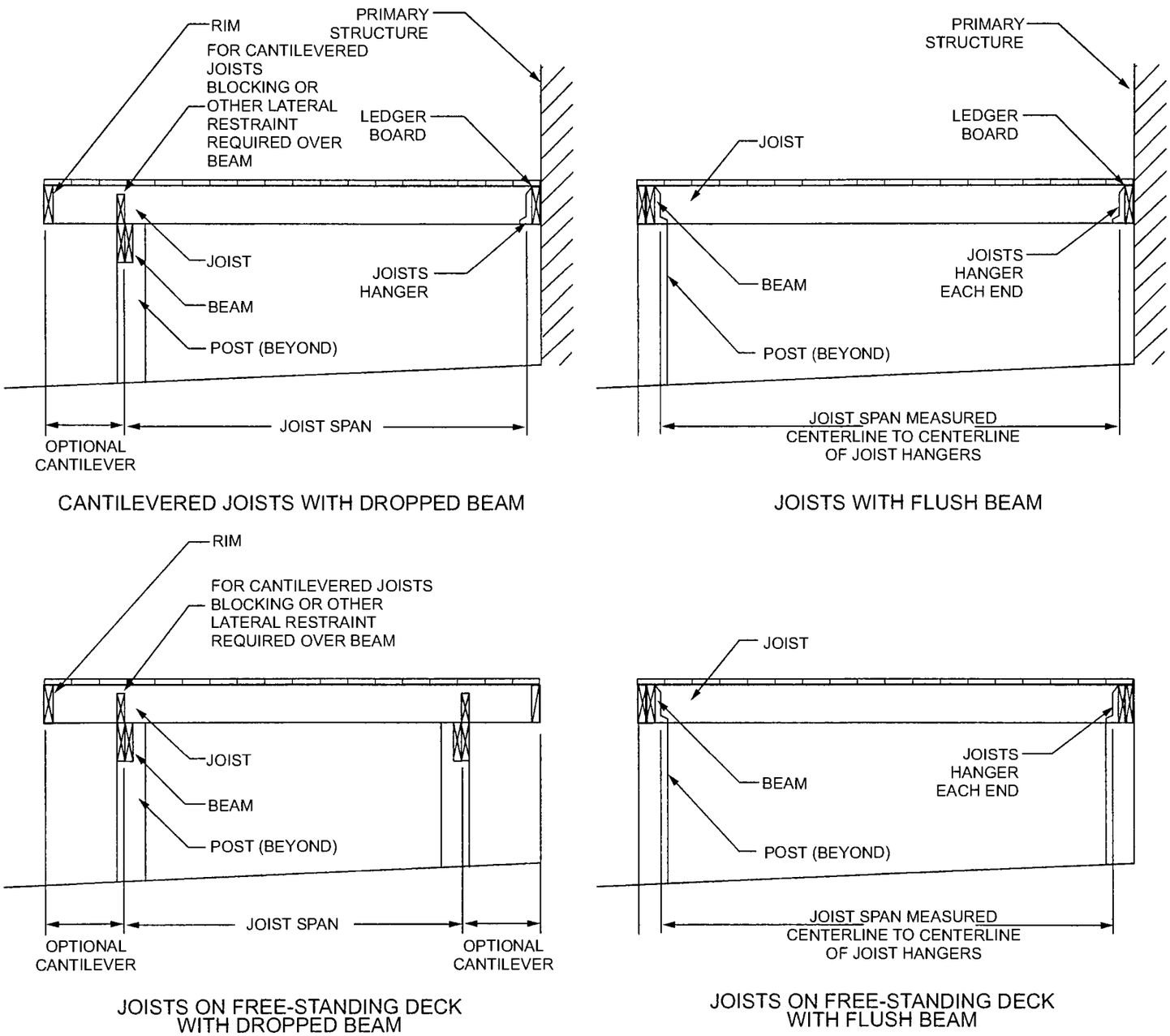

FIGURE R507.6
TYPICAL DECK JOIST SPANS

TABLE R507.6
DECK JOIST SPANS FOR COMMON LUMBER SPECIES (ft. - in.)

SPECIES[a]	SIZE	ALLOWABLE JOIST SPAN[b]			MAXIMUM CANTILEVER[c, f]		
		SPACING OF DECK JOISTS (inches)			SPACING OF DECK JOISTS WITH CANTILEVERS[c] (inches)		
		12	16	24	12	16	24
Southern pine	2 × 6	9-11	9-0	7-7	1-3	1-4	1-6
	2 × 8	13-1	11-10	9-8	2-1	2-3	2-5
	2 × 10	16-2	14-0	11-5	3-4	3-6	2-10
	2 × 12	18-0	16-6	13-6	4-6	4-2	3-4
Douglas fir-larch[d], hem-fir[d] spruce-pine-fir[d],	2 × 6	9-6	8-8	7-2	1-2	1-3	1-5
	2 × 8	12-6	11-1	9-1	1-11	2-1	2-3
	2 × 10	15-8	13-7	11-1	3-1	3-5	2-9
	2 × 12	18-0	15-9	12-10	4-6	3-11	3-3
Redwood, western cedars, ponderosa pine[e], red pine[e]	2 × 6	8-10	8-0	7-0	1-0	1-1	1-2
	2 × 8	11-8	10-7	8-8	1-8	1-10	2-0
	2 × 10	14-11	13-0	10-7	2-8	2-10	2-8
	2 × 12	17-5	15-1	12-4	3-10	3-9	3-1

For SI: 1 inch = 25.4 mm, 1 foot = 304.8 mm, 1 pound per square foot = 0.0479 kPa, 1 pound = 0.454 kg.

a. No. 2 grade with wet service factor.

b. Ground snow load, live load = 40 psf, dead load = 10 psf, $L/\Delta = 360$.

c. Ground snow load, live load = 40 psf, dead load = 10 psf, $L/\Delta = 360$ at main span, $L/\Delta = 180$ at cantilever with a 220-pound point load applied to end.

d. Includes incising factor.

e. Northern species with no incising factor.

f. Cantilevered spans not exceeding the nominal depth of the joist are permitted.

TABLE R507.7
MAXIMUM JOIST SPACING FOR DECKING

DECKING MATERIAL TYPE AND NOMINAL SIZE	MAXIMUM ON-CENTER JOIST SPACING	
	Decking perpendicular to joist	Decking diagonal to joist[a]
$1^1/_4$-inch-thick wood	16 inches	12 inches
2-inch-thick wood	24 inches	16 inches
Plastic composite	In accordance with Section R507.2	In accordance with Section R507.2

For SI: 1 inch = 25.4 mm, 1 foot = 304.8 mm, 1 degree = 0.01745 rad.

a. Maximum angle of 45 degrees from perpendicular for wood deck boards.

R507.8 Vertical and lateral supports. Where supported by attachment to an exterior wall, decks shall be positively anchored to the primary structure and designed for both vertical and lateral loads. Such attachment shall not be accomplished by the use of toenails or nails subject to withdrawal. For decks with cantilevered framing members, connection to exterior walls or other framing members shall be designed and constructed to resist uplift resulting from the full live load specified in Table R301.5 acting on the cantilevered portion of the deck. Where positive connection to the primary building structure cannot be verified during inspection, decks shall be self-supporting.

R507.9 Vertical and lateral supports at band joist. Vertical and lateral supports for decks shall comply with this section.

R507.9.1 Vertical supports. Vertical loads shall be transferred to band joists with ledgers in accordance with this section.

R507.9.1.1 Ledger details. Deck ledgers shall be a minimum 2-inch by 8-inch (51 mm by 203 mm) nominal, pressure-preservative-treated Southern pine, incised pressure-preservative-treated hem-fir, or approved, naturally durable, No. 2 grade or better lumber. Deck ledgers shall not support concentrated loads from beams or girders. Deck ledgers shall not be supported on stone or masonry veneer.

R507.9.1.2 Band joist details. Band joists supporting a ledger shall be a minimum 2-inch-nominal (51 mm), solid-sawn, spruce-pine-fir or better lumber or a minimum 1-inch by $9^1/_2$-inch (25 mm × 241 mm) dimensional, Douglas fir or better, laminated veneer lumber. Band joists shall bear fully on the primary structure capable of supporting all required loads.

R507.9.1.3 Ledger to band joist details. Fasteners used in deck ledger connections in accordance with Table R507.9.1.3(1) shall be hot-dipped galvanized or stainless steel and shall be installed in accordance with Table R507.9.1.3(2) and Figures R507.9.1.3(1) and R507.9.1.3(2).

R507.9.1.4 Alternate ledger details. Alternate framing configurations supporting a ledger constructed to meet the load requirements of Section R301.5 shall be permitted.

R507.9.2 Lateral connection. Lateral loads shall be transfered to the ground or to a structure capable of transmitting them to the ground. Where the lateral load connection is provided in accordance with Figure R507.9.2(1), hold-down tension devices shall be installed in not less than two locations per deck, within 24 inches (610 mm) of each end of the deck. Each device shall have an allowable stress design capacity of not less than 1,500 pounds (6672 N). Where the lateral load connections are provided in accordance with Figure R507.9.2(2), the hold-down tension devices shall be installed in not less than four locations per deck, and each device shall have an allowable stress design capacity of not less than 750 pounds (3336 N).

TABLE R507.9.1.3(1)
DECK LEDGER CONNECTION TO BAND JOIST[a, b]
(Deck live load = 40 psf, deck dead load = 10 psf, snow load ≤ 40 psf)

CONNECTION DETAILS	JOIST SPAN						
	6′ and less	6′1″ to 8′	8′1″ to 10′	10′1″ to 12′	12′1″ to 14′	14′1″ to 16′	16′1″ to 18′
	On-center spacing of fasteners						
$^1/_2$-inch diameter lag screw with $^1/_2$-inch maximum sheathing[c, d]	30	23	18	15	13	11	10
$^1/_2$-inch diameter bolt with $^1/_2$-inch maximum sheathing[d]	36	36	34	29	24	21	19
$^1/_2$-inch diameter bolt with 1-inch maximum sheathing[e]	36	36	29	24	21	18	16

For SI: 1 inch = 25.4 mm, 1 foot = 304.8 mm, 1 pound per square foot = 0.0479 kPa.

a. Ledgers shall be flashed in accordance with Section R703.4 to prevent water from contacting the house band joist.

b. Snow load shall not be assumed to act concurrently with live load.

c. The tip of the lag screw shall fully extend beyond the inside face of the band joist.

d. Sheathing shall be wood structural panel or solid sawn lumber.

e. Sheathing shall be permitted to be wood structural panel, gypsum board, fiberboard, lumber or foam sheathing. Up to $^1/_2$-inch thickness of stacked washers shall be permitted to substitute for up to $^1/_2$ inch of allowable sheathing thickness where combined with wood structural panel or lumber sheathing.

TABLE R507.9.1.3(2)
PLACEMENT OF LAG SCREWS AND BOLTS IN DECK LEDGERS AND BAND JOISTS

MINIMUM END AND EDGE DISTANCES AND SPACING BETWEEN ROWS				
	TOP EDGE	BOTTOM EDGE	ENDS	ROW SPACING
Ledger[a]	2 inches[d]	$^3/_4$ inch	2 inches[b]	$1^5/_8$ inches[b]
Band Joist[c]	$^3/_4$ inch	2 inches	2 inches[b]	$1^5/_8$ inches[b]

For SI: 1 inch = 25.4 mm.

a. Lag screws or bolts shall be staggered from the top to the bottom along the horizontal run of the deck ledger in accordance with Figure R507.9.1.3(1).

b. Maximum 5 inches.

c. For engineered rim joists, the manufacturer's recommendations shall govern.

d. The minimum distance from bottom row of lag screws or bolts to the top edge of the ledger shall be in accordance with Figure R507.9.1.3(1).

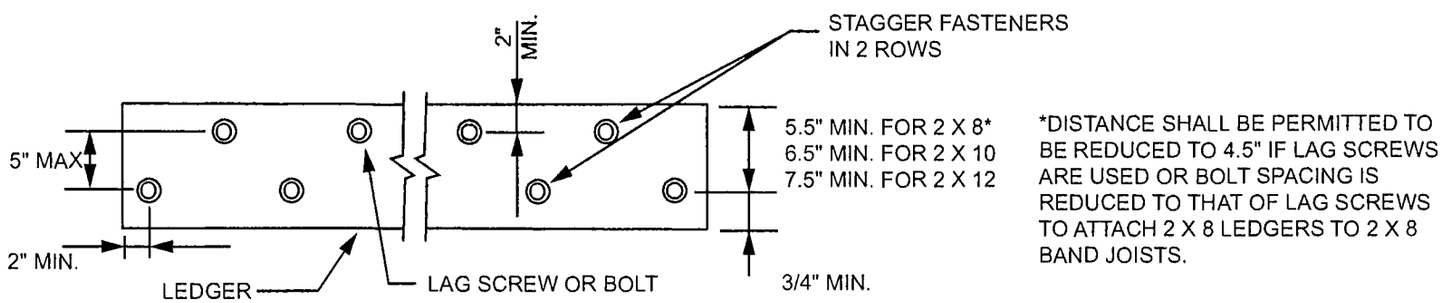

For SI: 1 inch = 25.4 mm.

FIGURE R507.9.1.3(1)
PLACEMENT OF LAG SCREWS AND BOLTS IN LEDGERS

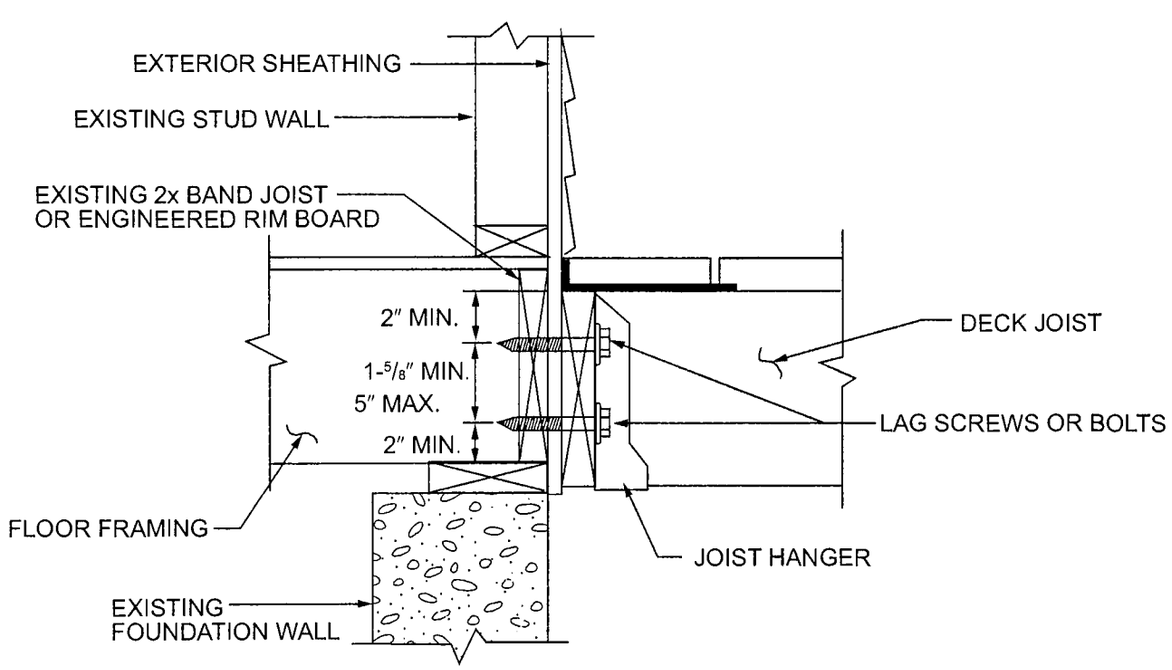

For SI: 1 inch = 25.4 mm.

FIGURE R507.9.1.3(2)
PLACEMENT OF LAG SCREWS AND BOLTS IN BAND JOISTS

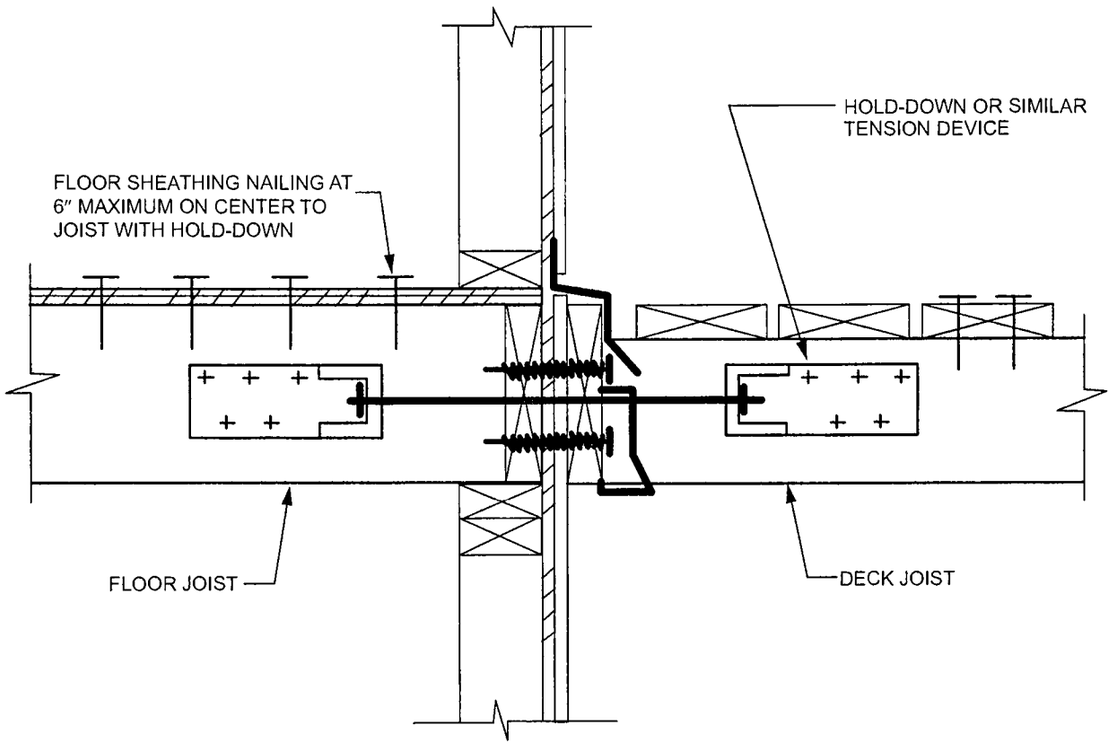

For SI: 1 inch = 25.4 mm.

FIGURE R507.9.2(1)
DECK ATTACHMENT FOR LATERAL LOADS

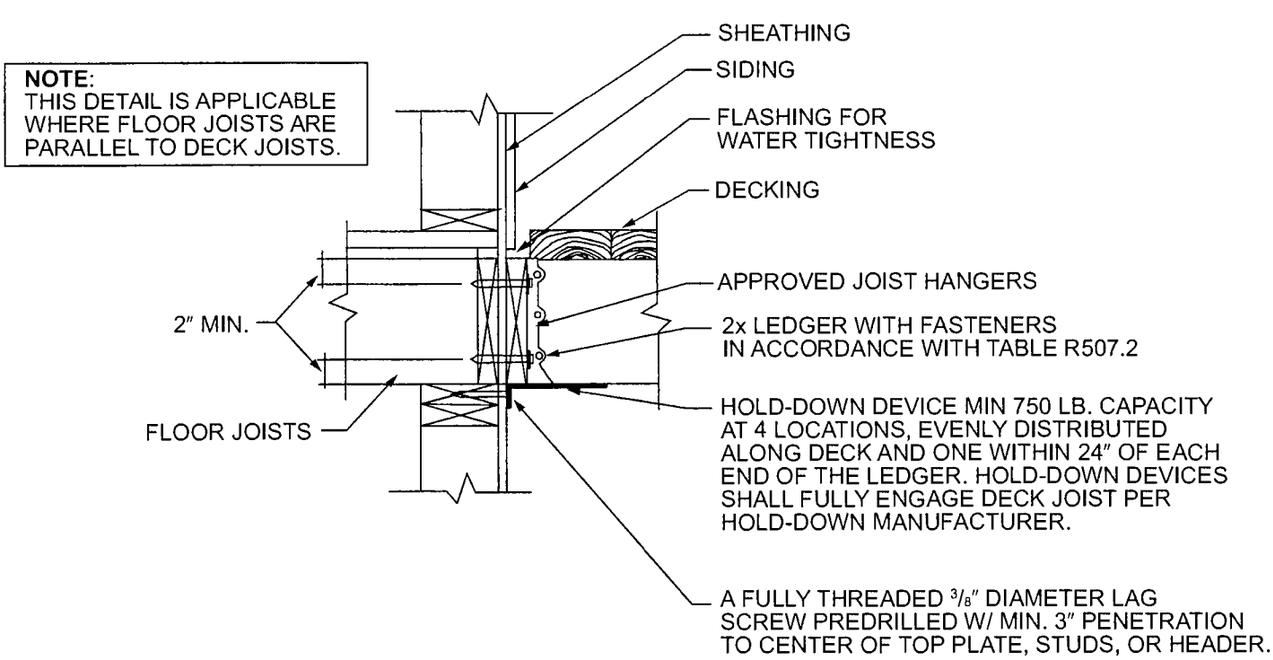

For SI: 1 inch = 25.4 mm, 1 foot = 304.8 mm.

FIGURE R507.9.2(2)
DECK ATTACHMENT FOR LATERAL LOADS

CALIFORNIA RESIDENTIAL CODE – MATRIX ADOPTION TABLE
CHAPTER 6 – WALL CONSTRUCTION

(Matrix Adoption Tables are nonregulatory, intended only as an aid to the code user. See Chapter 1 for state agency authority and building applications.)

Adopting agency	BSC	BSC-CG	SFM	HCD			DSA			OSHPD						BSCC	DPH	AGR	DWR	CEC	CA	SL	SLC
				1	2	1/AC	AC	SS	SS/CC	1	1R	2	3	4	5								
Adopt entire chapter																							
Adopt entire chapter as amended (amended sections listed below)				X	X																		
Adopt only those sections that are listed below																							
Chapter / Section																							
R602.1.1				X																			
R602.3.4.1				X																			
R606.1.1				X																			
R608.1				X																			
R610.1				X																			
R610.4 *Note*				X	X																		

CHAPTER 6

WALL CONSTRUCTION

User note:

About this chapter: *Chapter 6 contains prescriptive provisions for the design and construction of walls. The wall construction covered in Chapter 6 consists of five different types: wood framed, cold-formed steel framed, masonry, concrete and structural insulated panel (SIP). The primary concern of this chapter is the structural integrity of wall construction and transfer of all imposed loads to the supporting structure.*

SECTION R601
GENERAL

R601.1 Application. The provisions of this chapter shall control the design and construction of walls and partitions for buildings.

R601.2 Requirements. Wall construction shall be capable of accommodating all loads imposed in accordance with Section R301 and of transmitting the resulting loads to the supporting structural elements.

R601.2.1 Compressible floor-covering materials. Compressible floor-covering materials that compress more than $^1/_{32}$ inch (0.8 mm) when subjected to 50 pounds (23 kg) applied over 1 inch square (645 mm) of material and are greater than $^1/_8$ inch (3.2 mm) in thickness in the uncompressed state shall not extend beneath walls, partitions or columns, which are fastened to the floor.

SECTION R602
WOOD WALL FRAMING

R602.1 General. Wood and wood-based products used for load-supporting purposes shall conform to the applicable provisions of this section.

R602.1.1 Sawn lumber. Sawn lumber shall be identified by a grade mark of an accredited lumber grading or inspection agency and have design values certified by an accreditation body that complies with DOC PS 20. In lieu of a grade mark, a certification of inspection issued by a lumber grading or inspection agency meeting the requirements of this section shall be accepted.

Note: See Section R301.1.1.1 for limited-density owner-built rural dwellings.

R602.1.2 End-jointed lumber. Approved end-jointed lumber identified by a grade mark conforming to Section R602.1 shall be permitted to be used interchangeably with solid-sawn members of the same species and grade. End-jointed lumber used in an assembly required elsewhere in this code to have a fire-resistance rating shall have the designation "Heat Resistant Adhesive" or "HRA" included in its grade mark.

R602.1.3 Structural glued-laminated timbers. Glued-laminated timbers shall be manufactured and identified as required in ANSI A190.1, ANSI 117 and ASTM D3737.

R602.1.4 Structural log members. Structural log members shall comply with the provisions of ICC 400.

R602.1.5 Structural composite lumber. Structural capacities for structural composite lumber shall be established and monitored in accordance with ASTM D5456.

R602.1.6 Cross-laminated timber. Cross-laminated timber shall be manufactured and identified as required by ANSI/APA PRG 320.

R602.1.7 Engineered wood rim board. Engineered wood rim boards shall conform to ANSI/APA PRR 410 or shall be evaluated in accordance with ASTM D7672. Structural capacities shall be in accordance with either ANSI/APA PRR 410 or established in accordance with ASTM D7672. Rim boards conforming to ANSI/APA PRR 410 shall be marked in accordance with that standard.

R602.1.8 Wood structural panels. Wood structural panel sheathing shall conform to DOC PS 1, DOC PS 2 or, when manufactured in Canada, CSA O325 or CSA O437. Panels shall be identified for grade, bond classification, and performance category by a grade mark or certificate of inspection issued by an approved agency.

R602.1.9 Particleboard. Particleboard shall conform to ANSI A208.1. Particleboard shall be identified by the grade mark or certificate of inspection issued by an approved agency.

R602.1.10 Fiberboard. Fiberboard shall conform to ASTM C208. Fiberboard sheathing, where used structurally, shall be identified by an approved agency as conforming to ASTM C208.

R602.1.11 Structural insulated panels. Structural insulated panels shall be manufactured and identified in accordance with ANSI/APA PRS 610.1.

R602.2 Grade. Studs shall be a minimum No. 3, standard or stud grade lumber.

Exception: Bearing studs not supporting floors and nonbearing studs shall be permitted to be utility grade lumber, provided that the studs are spaced in accordance with Table R602.3(5).

TABLE R602.3(1)
FASTENING SCHEDULE

ITEM	DESCRIPTION OF BUILDING ELEMENTS	NUMBER AND TYPE OF FASTENER[a, b, c]	SPACING AND LOCATION
		Roof	
1	Blocking between ceiling joists or rafters to top plate	4-8d box ($2^1/_2$″ × 0.113″) or 3-8d common ($2^1/_2$″ × 0.131″); or 3-10d box (3″ × 0.128″); or 3-3″ × 0.131″ nails	Toe nail
2	Ceiling joists to top plate	4-8d box ($2^1/_2$″ × 0.113″); or 3-8d common ($2^1/_2$″ × 0.131″); or 3-10d box (3″ × 0.128″); or 3-3″ × 0.131″ nails	Per joist, toe nail
3	Ceiling joist not attached to parallel rafter, laps over partitions (see Section R802.5.2 and Table R802.5.2)	4-10d box (3″ × 0.128″); or 3-16d common ($3^1/_2$″ × 0.162″); or 4-3″ × 0.131″ nails	Face nail
4	Ceiling joist attached to parallel rafter (heel joint) (see Section R802.5.2 and Table R802.5.2)	Table R802.5.2	Face nail
5	Collar tie to rafter, face nail or $1^1/_4$″ × 20 ga. ridge strap to rafter	4-10d box (3″ × 0.128″); or 3-10d common (3″ × 0.148″); or 4-3″ × 0.131″ nails	Face nail each rafter
6	Rafter or roof truss to plate	3-16d box nails ($3^1/_2$″ × 0.135″); or 3-10d common nails (3″ × 0.148″); or 4-10d box (3″ × 0.128″); or 4-3″ × 0.131″ nails	2 toe nails on one side and 1 toe nail on opposite side of each rafter or truss[i]
7	Roof rafters to ridge, valley or hip rafters or roof rafter to minimum 2″ ridge beam	4-16d ($3^1/_2$″ × 0.135″); or 3-10d common (3″ × 0.148″); or 4-10d box (3″ × 0.128″); or 4-3″ × 0.131″ nails	Toe nail
		3-16d box $3^1/_2$″ × 0.135″); or 2-16d common ($3^1/_2$″ × 0.162″); or 3-10d box (3″ × 0.128″); or 3-3″ × 0.131″ nails	End nail
		Wall	
8	Stud to stud (not at braced wall panels)	16d common ($3^1/_2$″ × 0.162″)	24″ o.c. face nail
		10d box (3″ × 0.128″); or 3″ × 0.131″ nails	16″ o.c. face nail
9	Stud to stud and abutting studs at intersecting wall corners (at braced wall panels)	16d box ($3^1/_2$″ × 0.135″); or 3″ × 0.131″ nails	12″ o.c. face nail
		16d common ($3^1/_2$″ × 0.162″)	16″ o.c. face nail
10	Built-up header (2″ to 2″ header with $^1/_2$″ spacer)	16d common ($3^1/_2$″ × 0.162″)	16″ o.c. each edge face nail
		16d box ($3^1/_2$″ × 0.135″)	12″ o.c. each edge face nail
11	Continuous header to stud	5-8d box ($2^1/_2$″ × 0.113″); or 4-8d common ($2^1/_2$″ × 0.131″); or 4-10d box (3″ × 0.128″)	Toe nail
12	Top plate to top plate	16d common ($3^1/_2$″ × 0.162″)	16″ o.c. face nail
		10d box (3″ × 0.128″); or 3″ × 0.131″ nails	12″ o.c. face nail
13	Double top plate splice	8-16d common ($3^1/_2$″ × 0.162″); or 12-16d box ($3^1/_2$″ × 0.135″); or 12-10d box (3″ × 0.128″); or 12-3″ × 0.131″ nails	Face nail on each side of end joint (minimum 24″ lap splice length each side of end joint)

(continued)

TABLE R602.3(1)—continued
FASTENING SCHEDULE

ITEM	DESCRIPTION OF BUILDING ELEMENTS	NUMBER AND TYPE OF FASTENER[a, b, c]	SPACING AND LOCATION
14	Bottom plate to joist, rim joist, band joist or blocking (not at braced wall panels)	16d common ($3^1/_2$″ × 0.162″)	16″ o.c. face nail
		16d box ($3^1/_2$″ × 0.135″); or 3″ × 0.131″ nails	12″ o.c. face nail
15	Bottom plate to joist, rim joist, band joist or blocking (at braced wall panel)	3-16d box ($3^1/_2$″ × 0.135″); or 2-16d common ($3^1/_2$″ × 0.162″); or 4-3″ × 0.131″ nails	3 each 16″ o.c. face nail 2 each 16″ o.c. face nail 4 each 16″ o.c. face nail
16	Top or bottom plate to stud	4-8d box ($2^1/_2$″ × 0.113″); or 3-16d box ($3^1/_2$″ × 0.135″); or 4-8d common ($2^1/_2$″ × 0.131″); or 4-10d box (3″ × 0.128″); or 4-3″ × 0.131″ nails	Toe nail
		3-16d box ($3^1/_2$″ × 0.135″); or 2-16d common ($3^1/_2$″ × 0.162″); or 3-10d box (3″ × 0.128″); or 3-3″ × 0.131″ nails	End nail
17	Top plates, laps at corners and intersections	3-10d box (3″ × 0.128″); or 2-16d common ($3^1/_2$″ × 0.162″); or 3-3″ × 0.131″ nails	Face nail
18	1″ brace to each stud and plate	3-8d box ($2^1/_2$″ × 0.113″); or 2-8d common ($2^1/_2$″ × 0.131″); or 2-10d box (3″ × 0.128″); or 2 staples $1^3/_4$″	Face nail
19	1″ × 6″ sheathing to each bearing	3-8d box ($2^1/_2$″ × 0.113″); or 2-8d common ($2^1/_2$″ × 0.131″); or 2-10d box (3″ × 0.128″); or 2 staples, 1″ crown, 16 ga., $1^3/_4$″ long	Face nail
20	1″ × 8″ and wider sheathing to each bearing	3-8d box ($2^1/_2$″ × 0.113″); or 3-8d common ($2^1/_2$″ × 0.131″); or 3-10d box (3″ × 0.128″); or 3 staples, 1″ crown, 16 ga., $1^3/_4$″ long	Face nail
		Wider than 1″ × 8″ 4-8d box ($2^1/_2$″ × 0.113″); or 3-8d common ($2^1/_2$″ × 0.131″); or 3-10d box (3″ × 0.128″); or 4 staples, 1″ crown, 16 ga., $1^3/_4$″ long	
		Floor	
21	Joist to sill, top plate or girder	4-8d box ($2^1/_2$″ × 0.113″); or 3-8d common ($2^1/_2$″ × 0.131″); or 3-10d box (3″ × 0.128″); or 3-3″ × 0.131″ nails	Toe nail
22	Rim joist, band joist or blocking to sill or top plate (roof applications also)	8d box ($2^1/_2$″ × 0.113″)	4″ o.c. toe nail
		8d common ($2^1/_2$″ × 0.131″); or 10d box (3″ × 0.128″); or 3″ × 0.131″ nails	6″ o.c. toe nail
23	1″ × 6″ subfloor or less to each joist	3-8d box ($2^1/_2$″ × 0.113″); or 2-8d common ($2^1/_2$″ × 0.131″); or 3-10d box (3″ × 0.128″); or 2 staples, 1″ crown, 16 ga., $1^3/_4$″ long	Face nail

(continued)

TABLE 602.3(1)
FASTENING SCHEDULE—continued

ITEM	DESCRIPTION OF BUILDING ELEMENTS	NUMBER AND TYPE OF FASTENER[a, b, c]	SPACING AND LOCATION
		Floor	
24	2″ subfloor to joist or girder	3-16d box ($3^1/_2$″ × 0.135″); or 2-16d common ($3^1/_2$″ × 0.162″)	Blind and face nail
25	2″ planks (plank & beam—floor & roof)	3-16d box ($3^1/_2$″ × 0.135″); or 2-16d common ($3^1/_2$″ × 0.162″)	At each bearing, face nail
26	Band or rim joist to joist	3-16d common ($3^1/_2$″ × 0.162″) 4-10 box (3″ × 0.128″), or 4-3″ × 0.131″ nails; or 4-3″ × 14 ga. staples, $^7/_{16}$″ crown	End nail
27	Built-up girders and beams, 2-inch lumber layers	20d common (4″ × 0.192″); or	Nail each layer as follows: 32″ o.c. at top and bottom and staggered.
		10d box (3″ × 0.128″); or 3″ × 0.131″ nails	24″ o.c. face nail at top and bottom staggered on opposite sides
		And: 2-20d common (4″ × 0.192″); or 3-10d box (3″ × 0.128″); or 3-3″ × 0.131″ nails	Face nail at ends and at each splice
28	Ledger strip supporting joists or rafters	4-16d box ($3^1/_2$″ × 0.135″); or 3-16d common ($3^1/_2$″ × 0.162″); or 4-10d box (3″ × 0.128″); or 4-3″ × 0.131″ nails	At each joist or rafter, face nail
29	Bridging or blocking to joist	2-10d box (3″ × 0.128″), or 2-8d common ($2^1/_2$″ × 0.131″; or 2-3″ × 0.131″) nails	Each end, toe nail

ITEM	DESCRIPTION OF BUILDING ELEMENTS	NUMBER AND TYPE OF FASTENER[a, b, c]	SPACING OF FASTENERS	
			Edges (inches)[h]	Intermediate supports[c, e] (Inches)
	Wood structural panels, subfloor, roof and interior wall sheathing to framing and particleboard wall sheathing to framing [see Table R602.3(3) for wood structural panel *exterior* wall sheathing to wall framing]			
30	$^3/_8$″ – $^1/_2$″	6d common (2″ × 0.113″) nail (subfloor, wall)[j] 8d common ($2^1/_2$″ × 0.131″) nail (roof); or RSRS-01 ($2^3/_8$″ × 0.113″) nail (roof)[j]	6	12[f]
31	$^{19}/_{32}$″ – 1″	8d common nail ($2^1/_2$″ × 0.131″); or RSRS-01; ($2^3/_8$″ × 0.113″) nail (roof)[j]	6	12[f]
32	$1^1/_8$″ – $1^1/_4$″	10d common (3″ × 0.148″) nail; or 8d ($2^1/_2$″ × 0.131″) deformed nail	6	12
		Other wall sheathing[g]		
33	$^1/_2$″ structural cellulosic fiberboard sheathing	$1^1/_2$″ galvanized roofing nail, $^7/_{16}$″ head diameter, or $1^1/_4$″ long 16 ga. staple with $^7/_{16}$″ or 1″ crown	3	6
34	$^{25}/_{32}$″ structural cellulosic fiberboard sheathing	$1^3/_4$″ galvanized roofing nail, $^7/_{16}$″ head diameter, or $1^1/_2$″ long 16 ga. staple with $^7/_{16}$″ or 1″ crown	3	6
35	$^1/_2$″ gypsum sheathing[d]	$1^1/_2$″ galvanized roofing nail; staple galvanized, $1^1/_2$″ long; $1^1/_4$″ screws, Type W or S	7	7
36	$^5/_8$″ gypsum sheathing[d]	$1^3/_4$″ galvanized roofing nail; staple galvanized, $1^5/_8$″ long; $1^5/_8$″ screws, Type W or S	7	7
		Wood structural panels, combination subfloor underlayment to framing		
37	$^3/_4$″ and less	6d deformed (2″ × 0.120″) nail; or 8d common ($2^1/_2$″ × 0.131″) nail	6	12
38	$^7/_8$″ – 1″	8d common ($2^1/_2$″ × 0.131″) nail; or 8d deformed ($2^1/_2$″ × 0.120″) nail	6	12
39	$1^1/_8$″ – $1^1/_4$″	10d common (3″ × 0.148″) nail; or 8d deformed ($2^1/_2$″ × 0.120″) nail	6	12

For SI: 1 inch = 25.4 mm, 1 foot = 304.8 mm, 1 mile per hour = 0.447 m/s, 1 ksi = 6.895 MPa.

(continued)

TABLE R602.3(1)—continued
FASTENING SCHEDULE

a. Nails are smooth-common, box or deformed shanks except where otherwise stated. Nails used for framing and sheathing connections shall have minimum average bending yield strengths as shown: 80 ksi for shank diameter of 0.192 inch (20d common nail), 90 ksi for shank diameters larger than 0.142 inch but not larger than 0.177 inch, and 100 ksi for shank diameters of 0.142 inch or less.
b. Staples are 16 gage wire and have a minimum $^{7}/_{16}$-inch on diameter crown width.
c. Nails shall be spaced at not more than 6 inches on center at all supports where spans are 48 inches or greater.
d. Four-foot by 8-foot or 4-foot by 9-foot panels shall be applied vertically.
e. Spacing of fasteners not included in this table shall be based on Table R602.3(2).
f. For wood structural panel roof sheathing attached to gable end roof framing and to intermediate supports within 48 inches of roof edges and ridges, nails shall be spaced at 6 inches on center where the ultimate design wind speed is less than 130 mph and shall be spaced 4 inches on center where the ultimate design wind speed is 130 mph or greater but less than 140 mph.
g. Gypsum sheathing shall conform to ASTM C1396 and shall be installed in accordance with GA 253. Fiberboard sheathing shall conform to ASTM C208.
h. Spacing of fasteners on floor sheathing panel edges applies to panel edges supported by framing members and required blocking and at floor perimeters only. Spacing of fasteners on roof sheathing panel edges applies to panel edges supported by framing members and required blocking. Blocking of roof or floor sheathing panel edges perpendicular to the framing members need not be provided except as required by other provisions of this code. Floor perimeter shall be supported by framing members or solid blocking.
i. Where a rafter is fastened to an adjacent parallel ceiling joist in accordance with this schedule, provide two toe nails on one side of the rafter and toe nails from the ceiling joist to top plate in accordance with this schedule. The toe nail on the opposite side of the rafter shall not be required.
j. RSRS-01 is a Roof Sheathing Ring Shank nail meeting the specifications in ASTM F1667.

R602.3 Design and construction. Exterior walls of wood-frame construction shall be designed and constructed in accordance with the provisions of this chapter and Figures R602.3(1) and R602.3(2), or in accordance with AWC NDS. Components of exterior walls shall be fastened in accordance with Tables R602.3(1) through R602.3(4). Wall sheathing shall be fastened directly to framing members and, where placed on the exterior side of an exterior wall, shall be capable of resisting the wind pressures listed in Table R301.2(2) adjusted for height and exposure using Table R301.2(3) and shall conform to the requirements of Table R602.3(3). Wall sheathing used only for exterior wall covering purposes shall comply with Section R703.

Studs shall be continuous from support at the sole plate to a support at the top plate to resist loads perpendicular to the wall. The support shall be a foundation or floor, ceiling or roof diaphragm or shall be designed in accordance with accepted engineering practice.

Exception: Jack studs, trimmer studs and cripple studs at openings in walls that comply with Tables R602.7(1) and R602.7(2).

R602.3.1 Stud size, height and spacing. The size, height and spacing of studs shall be in accordance with Table R602.3(5).

Exceptions:

1. Utility grade studs shall not be spaced more than 16 inches (406 mm) on center, shall not support more than a roof and ceiling, and shall not exceed 8 feet (2438 mm) in height for exterior walls and load-bearing walls or 10 feet (3048 mm) for interior nonload-bearing walls.
2. Where snow loads are less than or equal to 25 pounds per square foot (1.2 kPa), and the ultimate design wind speed is less than or equal to 130 mph (58.1 m/s), 2-inch by 6-inch (38 mm by 140 mm) studs supporting a roof load with not more than 6 feet (1829 mm) of tributary length shall have a maximum height of 18 feet (5486 mm) where spaced at 16 inches (406 mm) on center, or 20 feet (6096 mm) where spaced at 12 inches (305 mm) on center. Studs shall be No. 2 grade lumber or better.
3. Exterior load-bearing studs not exceeding 12 feet (3658 mm) in height provided in accordance with Table R602.3(6). The minimum number of full-height studs adjacent to openings shall be in accordance with Section R602.7.5. The building shall be located in Exposure B, the roof live load shall not exceed 20 psf (0.96 kPa), and the ground snow load shall not exceed 30 psf (1.4 kPa). Studs and plates shall be No. 2 grade lumber or better.

R602.3.2 Top plate. Wood stud walls shall be capped with a double top plate installed to provide overlapping at corners and intersections with bearing partitions. End joints in top plates shall be offset not less than 24 inches (610 mm). Joints in plates need not occur over studs. Plates shall be not less than 2-inches (51 mm) nominal thickness and have a width not less than the width of the studs.

Exception: A single top plate used as an alternative to a double top plate shall comply with the following:

1. The single top plate shall be tied at corners, intersecting walls, and at in-line splices in straight wall lines in accordance with Table R602.3.2.
2. The rafters or joists shall be centered over the studs with a tolerance of not more than 1 inch (25 mm).
3. Omission of the top plate is permitted over headers where the headers are adequately tied to adjacent wall sections in accordance with Table R602.3.2.

R602.3.3 Bearing studs. Where joists, trusses or rafters are spaced more than 16 inches (406 mm) on center and the bearing studs below are spaced 24 inches (610 mm) on center, such members shall bear within 5 inches (127 mm) of the studs beneath.

Exceptions:

1. The top plates are two 2-inch by 6-inch (38 mm by 140 mm) or two 3-inch by 4-inch (64 mm by 89 mm) members.

2. A third top plate is installed.
3. Solid blocking equal in size to the studs is installed to reinforce the double top plate.

R602.3.4 Bottom (sole) plate. Studs shall have full bearing on a nominal 2-by (51 mm) or larger plate or sill having a width not less than to the width of the studs.

R602.3.4.1 Rodent proofing. *Annular spaces around pipes, electric cables, conduits or other openings in bottom/sole plates at exterior walls shall be protected against the passage of rodents by closing such openings in accordance with the California Green Building Standards Code, Chapter 4, Division 4.4.*

R602.3.5 Braced wall panel uplift load path. Braced wall panels located at exterior walls that support roof rafters or trusses (including stories below top story) shall have the framing members connected in accordance with one of the following:

1. Fastening in accordance with Table R602.3(1) where:
   1.1. The ultimate design wind speed does not exceed 115 mph (51 m/s), the wind exposure category is B, the roof pitch is 5:12 or greater, and the roof span is 32 feet (9754 mm) or less.
   1.2. The net uplift value at the top of a wall does not exceed 100 plf (146 N/mm). The net uplift value shall be determined in accordance with Section R802.11 and shall be permitted to be reduced by 60 plf (86 N/mm) for each full wall above.
2. Where the net uplift value at the top of a wall exceeds 100 plf (146 N/mm), installing approved uplift framing connectors to provide a continuous load path from the top of the wall to the foundation or to a point where the uplift force is 100 plf (146 N/mm) or less. The net uplift value shall be as determined in Item 1.2.
3. Wall sheathing and fasteners designed to resist combined uplift and shear forces in accordance with accepted engineering practice.

R602.4 Interior load-bearing walls. Interior load-bearing walls shall be constructed, framed and fireblocked as specified for exterior walls.

R602.5 Interior nonbearing walls. Interior nonbearing walls shall be permitted to be constructed with 2-inch by 3-inch (51 mm by 76 mm) studs spaced 24 inches (610 mm) on center or, where not part of a braced wall line, 2-inch by 4-inch (51 mm by 102 mm) flat studs spaced at 16 inches (406 mm) on center. Interior nonbearing walls shall be capped with not less than a single top plate. Interior nonbearing walls shall be fireblocked in accordance with Section R602.8.

R602.6 Drilling and notching of studs. Drilling and notching of studs shall be in accordance with the following:

1. Notching. Any stud in an exterior wall or bearing partition shall be permitted to be cut or notched to a depth not exceeding 25 percent of its width. Studs in nonbearing partitions shall be permitted to be notched to a depth not to exceed 40 percent of a single stud width.
2. Drilling. Any stud shall be permitted to be bored or drilled, provided that the diameter of the resulting hole is not more than 60 percent of the stud width, the edge of the hole is not more than $^5/_8$ inch (16 mm) to the edge of the stud, and the hole is not located in the same section as a cut or notch. Studs located in exterior walls or bearing partitions drilled over 40 percent and up to 60 percent shall be doubled with not more than two successive doubled studs bored. See Figures R602.6(1) and R602.6(2).

   Exception: Use of approved stud shoes is permitted where they are installed in accordance with the manufacturer's recommendations.

R602.6.1 Drilling and notching of top plate. Where piping or ductwork is placed in or partly in an exterior wall or interior load-bearing wall, necessitating cutting, drilling or notching of the top plate by more than 50 percent of its width, a galvanized metal tie not less than 0.054 inch thick (1.37 mm) (16 ga) and $1^1/_2$ inches (38 mm) wide shall be fastened across and to the plate at each side of the opening with not less than eight 10d (0.148 inch diameter) nails having a minimum length of $1^1/_2$ inches (38 mm) at each side or equivalent. The metal tie must extend not less than 6 inches past the opening. See Figure R602.6.1.

Exception: Where the entire side of the wall with the notch or cut is covered by wood structural panel sheathing.

TABLE R602.3.2
SINGLE TOP-PLATE SPLICE CONNECTION DETAILS

CONDITION	TOP-PLATE SPLICE LOCATION			
	Corners and intersecting walls		Butt joints in straight walls	
	Splice plate size	Minimum nails each side of joint	Splice plate size	Minimum nails each side of joint
Structures in SDC A-C; and in SDC D_0, D_1 and D_2 with braced wall line spacing less than 25 feet	3″ × 6″ × 0.036″ galvanized steel plate or equivalent	(6) 8d box ($2^1/_2$″ × 0.113″) nails	3′ × 12″ × 0.036″ galvanized steel plate or equivalent	(12) 8d box ($2^1/_2$″ × 0.113″) nails
Structures in SDC D_0, D_1 and D_2, with braced wall line spacing greater than or equal to 25 feet	3″ × 8″ by 0.036″ galvanized steel plate or equivalent	(9) 8d box ($2^1/_2$″ × 0.113″) nails	3′ × 16″ × 0.036″ galvanized steel plate or equivalent	(18) 8d box ($2^1/_2$″ × 0.113″) nails

For SI: 1 inch = 25.4 mm, 1 foot = 304.8 mm.

TABLE R602.3(2)
ALTERNATE ATTACHMENTS TO TABLE R602.3(1)

NOMINAL MATERIAL THICKNESS (Inches)	DESCRIPTION[a, b] OF FASTENER AND LENGTH (Inches)	SPACING[c] OF FASTENERS	
		Edges (Inches)	Intermediate supports (inches)
Wood structural panels subfloor, roof[g] and wall sheathing to framing and particleboard wall sheathing to framing[f]			
Up to $^1/_2$	Staple 15 ga. $1^3/_4$	4	8
	0.097 - 0.099 Nail $2^1/_4$	3	6
	Staple 16 ga. $1^3/_4$	3	6
$^{19}/_{32}$ and $^5/_8$	0.113 Nail 2	3	6
	Staple 15 and 16 ga. 2	4	8
	0.097 - 0.099 Nail $2^1/_4$	4	8
$^{23}/_{32}$ and $^3/_4$	Staple 14 ga. 2	4	8
	Staple 15 ga. $1^3/_4$	3	6
	0.097 - 0.099 Nail $2^1/_4$	4	8
	Staple 16 ga. 2	4	8
1	Staple 14 ga. $2^1/_4$	4	8
	0.113 Nail $2^1/_4$	3	6
	Staple 15 ga. $2^1/_4$	4	8
	0.097 - 0.099 Nail $2^1/_2$	4	8
NOMINAL MATERIAL THICKNESS (Inches)	**DESCRIPTION[a, b] OF FASTENER AND LENGTH (inches)**	**SPACING[c] OF FASTENERS**	
		Edges (inches)	**Body of panel[d] (inches)**
Floor underlayment; plywood-hardboard-particleboard[f]-fiber-cement[h]			
Fiber-cement			
$^1/_4$	3d, corrosion-resistant, ring shank nails (finished flooring other than tile)	3	6
	Staple 18 ga., $^7/_8$ long, $^1/_4$ crown (finished flooring other than tile)	3	6
	$1^1/_4$ long × .121 shank × .375 head diameter corrosion-resistant (galvanized or stainless steel) roofing nails (for tile finish)	8	8
	$1^1/_4$ long, No. 8 × .375 head diameter, ribbed wafer-head screws (for tile finish)	8	8
Plywood			
$^1/_4$ and $^5/_{16}$	$1^1/_4$ ring or screw shank nail-minimum $12^1/_2$ ga. (0.099″) shank diameter	3	6
	Staple 18 ga., $^7/_8$, $^3/_{16}$ crown width	2	5
$^{11}/_{32}$, $^3/_8$, $^{15}/_{32}$, and $^1/_2$	$1^1/_4$ ring or screw shank nail-minimum $12^1/_2$ ga. (0.099″) shank diameter	6	8[e]
$^{19}/_{32}$, $^5/_8$, $^{23}/_{32}$ and $^3/_4$	$1^1/_2$ ring or screw shank nail-minimum $12^1/_2$ ga. (0.099″) shank diameter	6	8
	Staple 16 ga. $1^1/_2$	6	8
Hardboard[f]			
0.200	$1^1/_2$ long ring-grooved underlayment nail	6	6
	4d cement-coated sinker nail	6	6
	Staple 18 ga., $^7/_8$ long (plastic coated)	3	6
Particleboard			
$^1/_4$	4d ring-grooved underlayment nail	3	6
	Staple 18 ga., $^7/_8$ long, $^3/_{16}$ crown	3	6
$^3/_8$	6d ring-grooved underlayment nail	6	10
	Staple 16 ga., $1^1/_8$ long, $^3/_8$ crown	3	6
$^1/_2$, $^5/_8$	6d ring-grooved underlayment nail	6	10
	Staple 16 ga., $1^5/_8$ long, $^3/_8$ crown	3	6

(continued)

TABLE R602.3(2)—continued
ALTERNATE ATTACHMENTS TO TABLE R602.3(1)

For SI: 1 inch = 25.4 mm.

a. Nail is a general description and shall be permitted to be T-head, modified round head or round head.

b. Staples shall have a minimum crown width of $^{7}/_{16}$-inch on diameter except as noted.

c. Nails or staples shall be spaced at not more than 6 inches on center at all supports where spans are 48 inches or greater. Nails or staples shall be spaced at not more than 12 inches on center at intermediate supports for floors.

d. Fasteners shall be placed in a grid pattern throughout the body of the panel.

e. For 5-ply panels, intermediate nails shall be spaced not more than 12 inches on center each way.

f. Hardboard underlayment shall conform to CPA/ANSI A135.4

g. Specified alternate attachments for roof sheathing shall be permitted where the ultimate design wind speed is less than 130 mph. Fasteners attaching wood structural panel roof sheathing to gable end wall framing shall be installed using the spacing listed for panel edges.

h. Fiber-cement underlayment shall conform to ASTM C1288 or ISO 8336, Category C.

TABLE R602.3(3)
REQUIREMENTS FOR WOOD STRUCTURAL PANEL WALL SHEATHING USED TO RESIST WIND PRESSURES[a, b, c]

MINIMUM NAIL		MINIMUM WOOD STRUCTURAL PANEL SPAN RATING	MINIMUM NOMINAL PANEL THICKNESS (inches)	MAXIMUM WALL STUD SPACING (Inches)	PANEL NAIL SPACING		ULTIMATE DESIGN WIND SPEED V_{ult} (mph)		
							Wind exposure category		
Size	Penetration (Inches)				Edges (Inches o.c.)	Field (inches o.c.)	B	C	D
6d Common (2.0″ × 0.113″)	1.5	24/0	$^{3}/_{8}$	16	6	12	140	115	110
8d Common (2.5″ × 0.131″)	1.75	24/16	$^{7}/_{16}$	16	6	12	170	140	135
				24	6	12	140	115	110

For SI: 1 inch = 25.4 mm, 1 mile per hour = 0.447 m/s.

a. Panel strength axis parallel or perpendicular to supports. Three-ply plywood sheathing with studs spaced more than 16 inches on center shall be applied with panel strength axis perpendicular to supports.

b. Table is based on wind pressures acting toward and away from building surfaces in accordance with Section R301.2. Lateral bracing requirements shall be in accordance with Section R602.10.

c. Wood structural panels with span ratings of Wall-16 or Wall-24 shall be permitted as an alternate to panels with a 24/0 span rating. Plywood siding rated 16 o.c. or 24 o.c. shall be permitted as an alternate to panels with a 24/16 span rating. Wall-16 and Plywood siding 16 o.c. shall be used with studs spaced not more than 16 inches on center.

TABLE R602.3(4)
ALLOWABLE SPANS FOR PARTICLEBOARD WALL SHEATHING[a]

THICKNESS (Inch)	GRADE	STUD SPACING (inches)	
		Where siding is nailed to studs	Where siding is nailed to sheathing
$^{3}/_{8}$	M-1 Exterior glue	16	—
$^{1}/_{2}$	M-2 Exterior glue	16	16

For SI: 1 inch = 25.4 mm.

a. Wall sheathing not exposed to the weather. If the panels are applied horizontally, the end joints of the panel shall be offset so that four panel corners will not meet. Panel edges must be supported. Leave a $^{1}/_{16}$-inch gap between panels and nail not less than $^{3}/_{8}$ inch from panel edges.

R602.7 Headers. For header spans, see Tables R602.7(1), R602.7(2) and R602.7(3).

R602.7.1 Single member headers. Single headers shall be framed with a single flat 2-inch-nominal (51 mm) member or wall plate not less in width than the wall studs on the top and bottom of the header in accordance with Figures R602.7.1(1) and R602.7.1(2) and face nailed to the top and bottom of the header with 10d box nails (3 inches × 0.128 inches) spaced 12 inches on center.

R602.7.2 Rim board headers. Rim board header size, material and span shall be in accordance with Table R602.7(1). Rim board headers shall be constructed in accordance with Figure R602.7.2 and shall be supported at each end by full-height studs. The number of full-height studs at each end shall be not less than the number of studs displaced by half of the header span based on the maximum stud spacing in accordance with Table R602.3(5). Rim board headers supporting concentrated loads shall be designed in accordance with accepted engineering practice.

R602.7.3 Wood structural panel box headers. Wood structural panel box headers shall be constructed in accordance with Figure R602.7.3 and Table R602.7.3.

TABLE R602.3(5)
SIZE, HEIGHT AND SPACING OF WOOD STUDS[a]

STUD SIZE (Inches)	BEARING WALLS					NONBEARING WALLS	
	Laterally unsupported stud height[a] (feet)	Maximum spacing where supporting a roof-ceiling assembly or a habitable attic assembly, only (Inches)	Maximum spacing where supporting one floor, plus a roof-ceiling assembly or a habitable attic assembly (Inches)	Maximum spacing where supporting two floors, plus a roof-ceiling assembly or a habitable attic assembly (inches)	Maximum spacing where supporting one floor height[a] (Inches)	Laterally unsupported stud height[a] (feet)	Maximum spacing (Inches)
		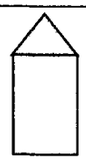	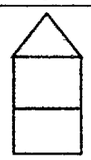	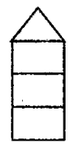	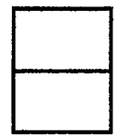		
2 × 3[b]	—	—	—	—	—	10	16
2 × 4	10	24[c]	16[c]	—	24	14	24
3 × 4	10	24	24	16	24	14	24
2 × 5	10	24	24	—	24	16	24
2 × 6	10	24	24	16	24	20	24

For SI: 1 inch = 25.4 mm, 1 foot = 304.8 mm.

a. Listed heights are distances between points of lateral support placed perpendicular to the plane of the wall. Bearing walls shall be sheathed on not less than one side or bridging shall be installed not greater than 4 feet apart measured vertically from either end of the stud. Increases in unsupported height are permitted where in compliance with Exception 2 of Section R602.3.1 or designed in accordance with accepted engineering practice.

b. Shall not be used in exterior walls.

c. A habitable attic assembly supported by 2 × 4 studs is limited to a roof span of 32 feet. Where the roof span exceeds 32 feet, the wall studs shall be increased to 2 × 6 or the studs shall be designed in accordance with accepted engineering practice.

TABLE R602.3(6)
ALTERNATE WOOD BEARING WALL STUD SIZE, HEIGHT AND SPACING

STUD HEIGHT	SUPPORTING	STUD SPACING[a]	ULTIMATE DESIGN WIND SPEED					
			115 mph		130 mph[b]		140 mph[b]	
			Maximum roof/floor span[c]		Maximum roof/floor span[c]		Maximum roof/floor span[c]	
			12 ft.	24 ft.	12 ft.	24 ft.	12 ft.	24 ft.
11 ft.	Roof Only	12 in.	2 × 4	2 × 4	2 × 4	2 × 4	2 × 4	2 × 4
		16 in.	2 × 4	2 × 4	2 × 4	2 × 6	2 × 4	2 × 6
		24 in.	2 × 6	2 × 6	2 × 6	2 × 6	2 × 6	2 × 6
	Roof and One Floor	12 in.	2 × 4	2 × 6	2 × 4	2 × 6	2 × 4	2 × 6
		16 in.	2 × 6	2 × 6	2 × 6	2 × 6	2 × 6	2 × 6
		24 in.	2 × 6	2 × 6	2 × 6	2 × 6	2 × 6	2 × 6
12 ft.	Roof Only	12 in	2 × 4	2 × 4	2 × 4	2 × 6	2 × 4	2 × 6
		16 in.	2 × 4	2 × 6	2 × 6	2 × 6	2 × 6	2 × 6
		24 in.	2 × 6	2 × 6	2 × 6	2 × 6	2 × 6	2 × 6
	Roof and One Floor	12 in	2 × 4	2 × 6	2 × 6	2 × 6	2 × 6	2 × 6
		16 in.	2 × 6	2 × 6	2 × 6	2 × 6	2 × 6	2 × 6
		24 in.	2 × 6	2 × 6	2 × 6	2 × 6	2 × 6	DR

For SI: 1 inch = 25.4mm, 1 foot = 304.8 mm, 1 mph = 0.447 m/s, 1 pound = 4.448 N.

DR = Design Required.

a. Wall studs not exceeding 16 inches on center shall be sheathed with minimum $^1/_2$-inch gypsum board on the interior and $^3/_8$-inch wood structural panel sheathing on the exterior. Wood structural panel sheathing shall be attached with 8d (2.5" x 0.131") nails not greater than 6 inches on center along panel edges and 12 inches on center at intermediate supports, and all panel joints shall occur over studs or blocking.

b. Where the ultimate design wind speed exceeds 115 mph, studs shall be attached to top and bottom plates with connectors having a minimum 300-pound lateral capacity.

c. The maximum span is applicable to both single- and multiple-span roof and floor conditions. The roof assembly shall not contain a habitable attic.

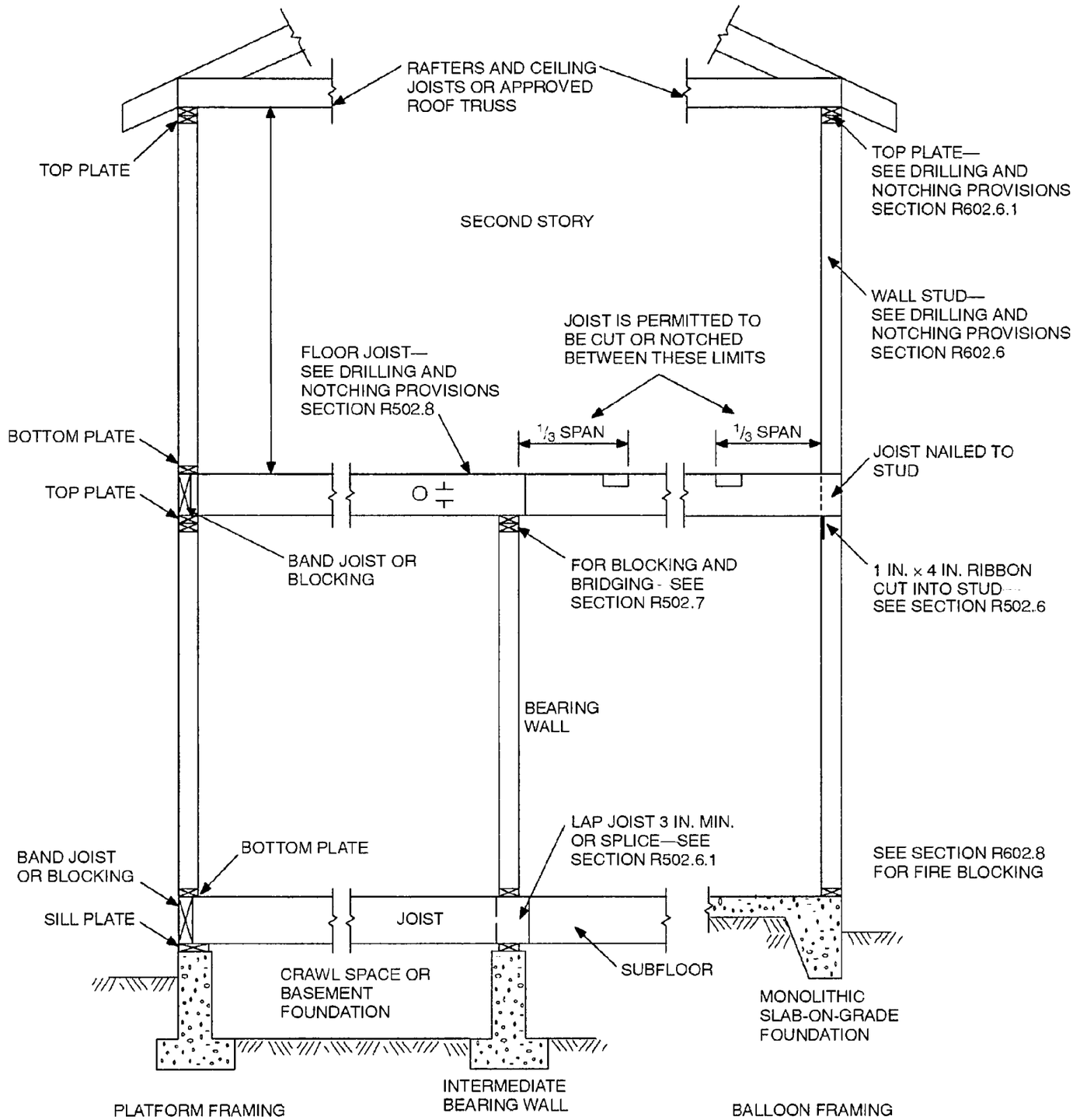

For SI: 1 inch = 25.4 mm, 1 foot = 304.8 mm.

FIGURE R602.3(1)
TYPICAL WALL, FLOOR AND ROOF FRAMING

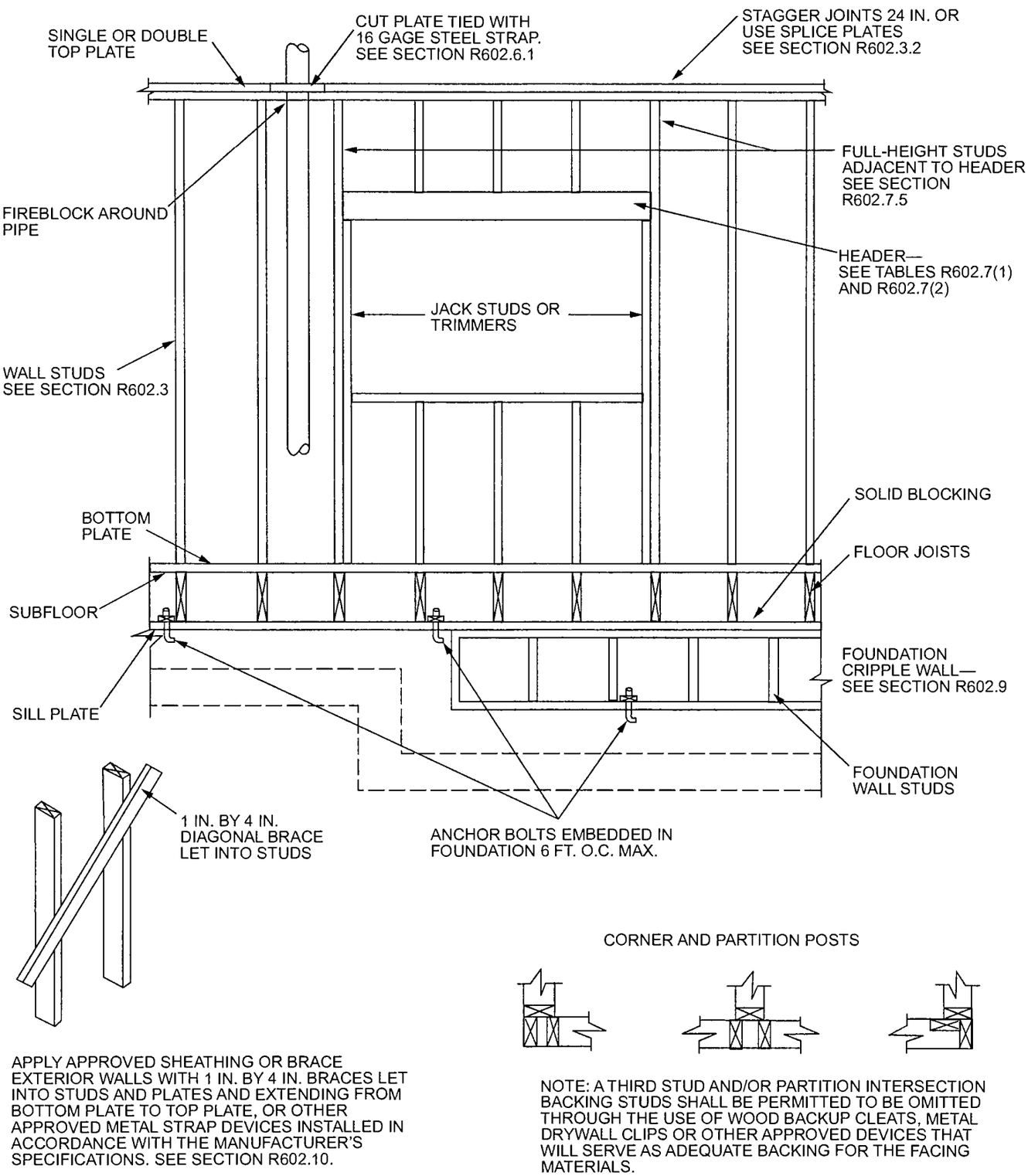

For SI: 1 inch = 25.4 mm, 1 foot = 304.8 mm.

FIGURE R602.3(2)
FRAMING DETAILS

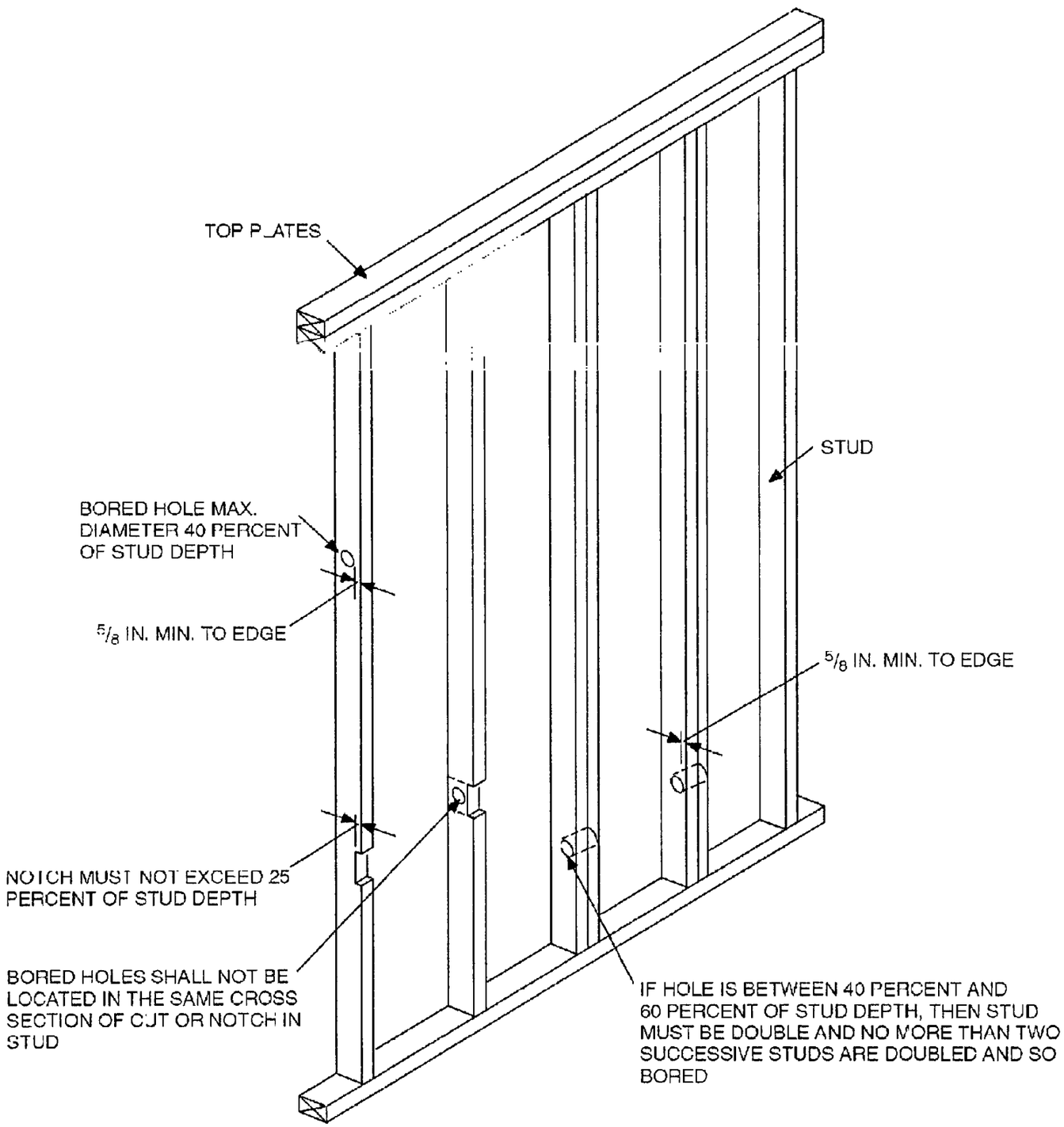

For SI: 1 inch = 25.4 mm.
Note: Condition for exterior and bearing walls.

FIGURE R602.6(1)
NOTCHING AND BORED HOLE LIMITATIONS FOR EXTERIOR WALLS AND BEARING WALLS

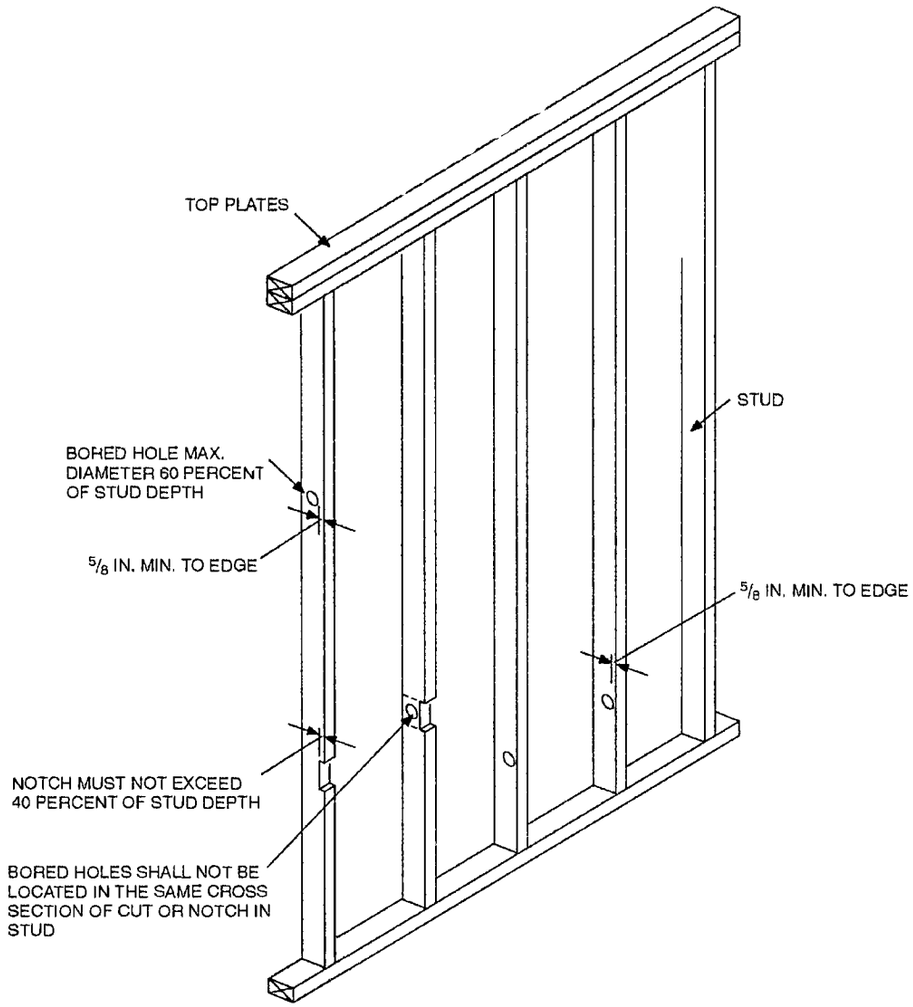

For SI: 1 inch = 25.4 mm.

FIGURE R602.6(2)
NOTCHING AND BORED HOLE LIMITATIONS FOR INTERIOR NONBEARING WALLS

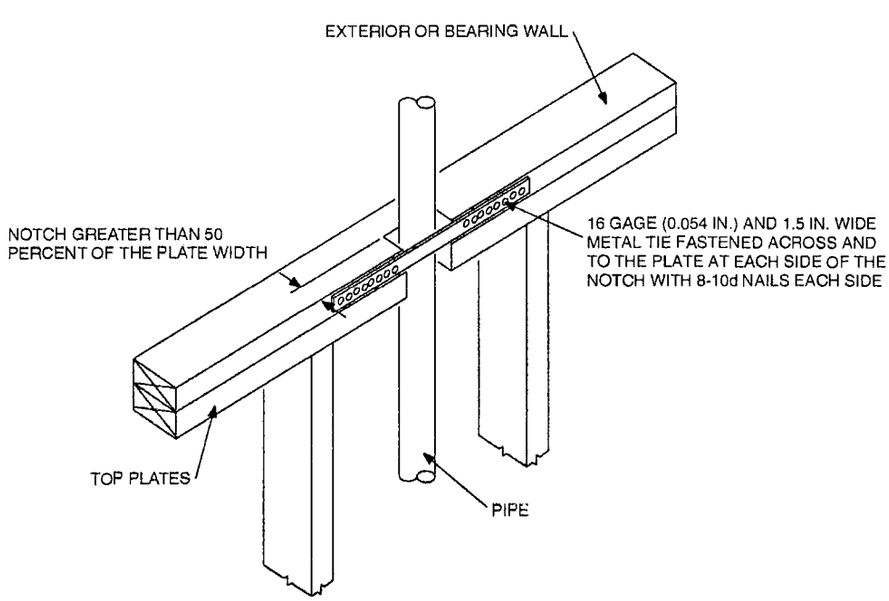

For SI: 1 inch = 25.4 mm

FIGURE R602.6.1
TOP PLATE FRAMING TO ACCOMMODATE PIPING

TABLE R602.7(1)
GIRDER SPANS[a] AND HEADER SPANS[a] FOR EXTERIOR BEARING WALLS
(Maximum spans for Douglas fir-larch, hem-fir, Southern pine and spruce-pine-fir[b] and required number of jack studs)

GIRDERS AND HEADERS SUPPORTING	SIZE	GROUND SNOW LOAD (psf)[e]																	
		30						50						70					
		Building width[c] (feet)																	
		12		24		36		12		24		36		12		24		36	
		Span[f]	NJ[d]	Span[f]	NJ[d]	Span[f]	NJ[d]	Span[f]	NJ[d]	Span[f]	NJ[d]	Span[f]	NJ[d]	Span[f]	NJ[d]	Span[f]	NJ[d]	Span[f]	NJ[d]
Roof and ceiling ROOF AND CEILING	1-2 × 6	4-0	1	3-1	2	2-7	2	3-5	1	2-8	2	2-3	2	3-0	2	2-4	2	2-0	2
	1-2 × 8	5-1	2	3-11	2	3-3	2	4-4	2	3-4	2	2-10	2	3-10	2	3-0	2	2-6	3
	1-2 × 10	6-0	2	4-8	2	3-11	2	5-2	2	4-0	2	3-4	3	4-7	2	3-6	3	3-0	3
	1-2 × 12	7-1	2	5-5	2	4-7	3	6-1	2	4-8	3	3-11	3	5-5	2	4-2	3	3-6	3
	2-2 × 4	4-0	1	3-1	1	2-7	1	3-5	1	2-7	1	2-2	1	3-0	1	2-4	1	2-0	1
	2-2 × 6	6-0	1	4-7	1	3-10	1	5-1	1	3-11	1	3-3	2	4-6	1	3-6	2	2-11	2
	2-2 × 8	7-7	1	5-9	1	4-10	2	6-5	1	5-0	2	4-2	2	5-9	1	4-5	2	3-9	2
	2-2 × 10	9-0	1	6-10	2	5-9	2	7-8	2	5-11	2	4-11	2	6-9	2	5-3	2	4-5	2
	2-2 × 12	10-7	2	8-1	2	6-10	2	9-0	2	6-11	2	5-10	2	8-0	2	6-2	2	5-2	3
	3-2 × 8	9-5	1	7-3	1	6-1	1	8-1	1	6-3	1	5-3	2	7-2	1	5-6	2	4-8	2
	3-2 × 10	11-3	1	8-7	1	7-3	2	9-7	1	7-4	2	6-2	2	8-6	1	6-7	2	5-6	2
	3-2 × 12	13-2	1	10-1	2	8-6	2	11-3	2	8-8	2	7-4	2	10-0	2	7-9	2	6-6	2
	4-2 × 8	10-11	1	8-4	1	7-0	1	9-4	1	7-2	1	6-0	1	8-3	1	6-4	1	5-4	2
	4-2 × 10	12-11	1	9-11	1	8-4	1	11-1	1	8-6	1	7-2	2	9-10	1	7-7	2	6-4	2
	4-2 × 12	15-3	1	11-8	1	9-10	2	13-0	1	10-0	2	8-5	2	11-7	1	8-11	2	7-6	2
Roof, ceiling and one center-bearing floor 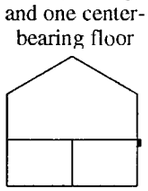 ROOF, CEILING AND ONE FLOOR (CENTER BEARING)	1-2 × 6	3-3	1	2-7	2	2-2	2	3-0	2	2-4	2	2-0	2	2-9	2	2-2	2	1-10	2
	1-2 × 8	4-1	2	3-3	2	2-9	2	3-9	2	3-0	2	2-6	3	3-6	2	2-9	2	2-4	3
	1-2 × 10	4-11	2	3-10	2	3-3	3	4-6	2	3-6	3	3-0	3	4-1	2	3-3	3	2-9	3
	1-2 × 12	5-9	2	4-6	3	3-10	3	5-3	2	4-2	3	3-6	3	4-10	3	3-10	3	3-3	4
	2-2 × 4	3-3	1	2-6	1	2-2	1	3-0	1	2-4	1	2-0	1	2-8	1	2-2	1	1-10	1
	2-2 × 6	4-10	1	3-9	1	3-3	2	4-5	1	3-6	2	3-0	2	4-1	1	3-3	2	2-9	2
	2-2 × 8	6-1	1	4-10	2	4-1	2	5-7	2	4-5	2	3-9	2	5-2	2	4-1	2	3-6	2
	2-2 × 10	7-3	2	5-8	2	4-10	2	6-8	2	5-3	2	4-5	2	6-1	2	4-10	2	4-1	2
	2-2 × 12	8-6	2	6-8	2	5-8	2	7-10	2	6-2	2	5-3	3	7-2	2	5-8	2	4-10	3
	3-2 × 8	7-8	1	6-0	1	5-1	2	7-0	1	5-6	2	4-8	2	6-5	1	5-1	2	4-4	2
	3-2 × 10	9-1	1	7-2	2	6-1	2	8-4	1	6-7	2	5-7	2	7-8	2	6-1	2	5-2	2
	3-2 × 12	10-8	2	8-5	2	7-2	2	9-10	2	7-8	2	6-7	2	9-0	2	7-1	2	6-1	2
	4-2 × 8	8-10	1	6-11	1	5-11	1	8-1	1	6-4	1	5-5	2	7-5	1	5-11	1	5-0	2
	4-2 × 10	10-6	1	8-3	2	7-0	2	9-8	1	7-7	2	6-5	2	8-10	1	7-0	2	6-0	2
	4-2 × 12	12-4	1	9-8	2	8-3	2	11-4	2	8-11	2	7-7	2	10-4	2	8-3	2	7-0	2
Roof, ceiling and one clear-span floor 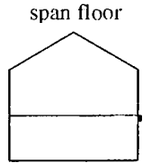 ROOF, CEILING AND ONE FLOOR (CLEAR SPAN)	1-2 × 6	2-11	2	2-3	2	1-11	2	2-9	2	2-1	2	1-9	2	2-7	2	2-0	2	1-8	2
	1-2 × 8	3-9	2	2-10	2	2-5	3	3-6	2	2-8	2	2-3	3	3-3	2	2-6	3	2-2	3
	1-2 × 10	4-5	2	3-5	3	2-10	3	4-2	2	3-2	3	2-8	3	3-11	2	3-0	3	2-6	3
	1-2 × 12	5-2	2	4-0	3	3-4	3	4-10	3	3-9	3	3-2	4	4-7	3	3-6	3	3-0	4
	2-2 × 4	2-11	1	2-3	1	1-10	1	2-9	1	2-1	1	1-9	1	2-7	1	2-0	1	1-8	1
	2-2 × 6	4-4	1	3-4	2	2-10	2	4-1	1	3-2	2	2-8	2	3-10	1	3-0	2	2-6	2
	2-2 × 8	5-6	2	4-3	2	3-7	2	5-2	2	4-0	2	3-4	2	4-10	2	3-9	2	3-2	2
	2-2 × 10	6-7	2	5-0	2	4-2	2	6-1	2	4-9	2	4-0	2	5-9	2	4-5	2	3-9	3
	2-2 × 12	7-9	2	5-11	2	4-11	3	7-2	2	5-7	2	4-8	3	6-9	2	5-3	3	4-5	3
	3-2 × 8	6-11	1	5-3	2	4-5	2	6-5	1	5-0	2	4-2	2	6-1	1	4-8	2	4-0	2
	3-2 × 10	8-3	2	6-3	2	5-3	2	7-8	2	5-11	2	5-0	2	7-3	2	5-7	2	4-8	2
	3-2 × 12	9-8	2	7-5	2	6-2	2	9-0	2	7-0	2	5-10	2	8-6	2	6-7	2	5-6	3
	4-2 × 8	8-0	1	6-1	1	5-1	2	7-5	1	5-9	2	4-10	2	7-0	1	5-5	2	4-7	2
	4-2 × 10	9-6	1	7-3	2	6-1	2	8-10	1	6-10	2	5-9	2	8-4	1	6-5	2	5-5	2
	4-2 × 12	11-2	2	8-6	2	7-2	2	10-5	2	8-0	2	6-9	2	9-10	2	7-7	2	6-5	2

(continued)

TABLE R602.7(1)—continued
GIRDER SPANS[a] AND HEADER SPANS[a] FOR EXTERIOR BEARING WALLS
(Maximum spans for Douglas fir-larch, hem-fir, Southern pine and spruce-pine-fir[b] and required number of jack studs)

GIRDERS AND HEADERS SUPPORTING	SIZE	GROUND SNOW LOAD (psf)[e]																	
		30						50						70					
		Building width[c] (feet)																	
		20		24		36		20		24		36		20		24		36	
		Span[f]	NJ[d]	Span[f]	NJ[d]	Span[f]	NJ[d]	Span[f]	NJ[d]	Span[f]	NJ[d]	Span[f]	NJ[d]	Span[f]	NJ[d]	Span[f]	NJ[d]	Span[f]	NJ[d]
Roof, ceiling and two center-bearing floors 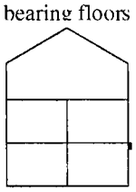 ROOF, CEILING AND TWO FLOORS (CENTER BEARING)	1-2 × 6	2-8	2	2-1	2	1-10	2	2-7	2	2-0	2	1-9	2	2-5	2	1-11	2	1-8	2
	1-2 × 8	3-5	2	2-8	2	2-4	3	3-3	2	2-7	2	2-2	3	3-1	2	2-5	3	2-1	3
	1-2 × 10	4-0	2	3-2	3	2-9	3	3-10	2	3-1	3	2-7	3	3-8	2	2-11	3	2-5	3
	1-2 × 12	4-9	3	3-9	3	3-2	4	4-6	3	3-7	3	3-1	4	4-3	3	3-5	3	2-11	4
	2-2 × 4	2-8	1	2-1	1	1-9	1	2-6	1	2-0	1	1-8	1	2-5	1	1-11	1	1-7	1
	2-2 × 6	4-0	1	3-2	2	2-8	2	3-9	1	3-0	2	2-7	2	3-7	1	2-10	2	2-5	2
	2-2 × 8	5-0	2	4-0	2	3-5	2	4-10	2	3-10	2	3-3	2	4-7	2	3-7	2	3-1	2
	2-2 × 10	6-0	2	4-9	2	4-0	2	5-8	2	4-6	2	3-10	3	5-5	2	4-3	2	3-8	3
	2-2 × 12	7-0	2	5-7	2	4-9	3	6-8	2	5-4	3	4-6	3	6-4	2	5-0	3	4-3	3
	3-2 × 8	6-4	1	5-0	2	4-3	2	6-0	1	4-9	2	4-1	2	5-8	2	4-6	2	3-10	2
	3-2 × 10	7-6	2	5-11	2	5-1	2	7-1	2	5-8	2	4-10	2	6-9	2	5-4	2	4-7	2
	3-2 × 12	8-10	2	7-0	2	5-11	2	8-5	2	6-8	2	5-8	3	8-0	2	6-4	2	5-4	3
	4-2 × 8	7-3	1	5-9	1	4-11	2	6-11	1	5-6	2	4-8	2	6-7	1	5-2	2	4-5	2
	4-2 × 10	8-8	1	6-10	2	5-10	2	8-3	2	6-6	2	5-7	2	7-10	2	6-2	2	5-3	2
	4-2 × 12	10-2	2	8-1	2	6-10	2	9-8	2	7-8	2	6-7	2	9-2	2	7-3	2	6-2	2
Roof, ceiling, and two clear-span floors 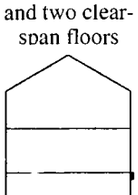 ROOF, CEILING AND TWO FLOORS (CLEAR SPAN)	1-2 × 6	2-3	2	1-9	2	1-5	2	2-3	2	1-9	2	1-5	3	2-2	2	1-8	2	1-5	3
	1-2 × 8	2-10	2	2-2	3	1-10	3	2-10	2	2-2	3	1-10	3	2-9	2	2-1	3	1-10	3
	1-2 × 10	3-4	2	2-7	3	2-2	3	3-4	3	2-7	3	2-2	4	3-3	3	2-6	3	2-2	4
	1-2 × 12	4-0	3	3-0	3	2-7	4	4-0	3	3-0	4	2-7	4	3-10	3	3-0	4	2-6	4
	2-2 × 4	2-3	1	1-8	1	1-4	1	2-3	1	1-8	1	1-4	1	2-2	1	1-8	1	1-4	2
	2-2 × 6	3-4	1	2-6	2	2-2	2	3-4	2	2-6	2	2-2	2	3-3	2	2-6	2	2-1	2
	2-2 × 8	4-3	2	3-3	2	2-8	2	4-3	2	3-3	2	2-8	2	4-1	2	3-2	2	2-8	3
	2-2 × 10	5-0	2	3-10	2	3-2	3	5-0	2	3-10	2	3-2	3	4-10	2	3-9	3	3-2	3
	2-2 × 12	5-11	2	4-6	3	3-9	3	5-11	2	4-6	3	3-9	3	5-8	2	4-5	3	3-9	3
	3-2 × 8	5-3	1	4-0	2	3-5	2	5-3	2	4-0	2	3-5	2	5-1	2	3-11	2	3-4	2
	3-2 × 10	6-3	2	4-9	2	4-0	2	6-3	2	4-9	2	4-0	2	6-1	2	4-8	2	4-0	3
	3-2 × 12	7-5	2	5-8	2	4-9	3	7-5	2	5-8	2	4-9	3	7-2	2	5-6	3	4-8	3
	4-2 × 8	6-1	1	4-8	2	3-11	2	6-1	1	4-8	2	3-11	2	5-11	1	4-7	2	3-10	2
	4-2 × 10	7-3	2	5-6	2	4-8	2	7-3	2	5-6	2	4-8	2	7-0	2	5-5	2	4-7	2
	4-2 × 12	8-6	2	6-6	2	5-6	2	8-6	2	6-6	2	5-6	2	8-3	2	6-4	2	5-4	3

For SI: 1 inch = 25.4 mm, 1 pound per square foot = 0.0479 kPa.

a. Spans are given in feet and inches.

b. Spans are based on minimum design properties for No. 2 grade lumber of Douglas fir-larch, hem-fir, Southern pine, and spruce-pine-fir.

c. Building width is measured perpendicular to the ridge. For widths between those shown, spans are permitted to be interpolated.

d. NJ = Number of jack studs required to support each end. Where the number of required jack studs equals one, the header is permitted to be supported by an approved framing anchor attached to the full-height wall stud and to the header.

e. Use 30 psf ground snow load for cases in which ground snow load is less than 30 psf and the roof live load is equal to or less than 20 psf.

f. Spans are calculated assuming the top of the header or girder is laterally braced by perpendicular framing. Where the top of the header or girder is not laterally braced (for example, cripple studs bearing on the header), tabulated spans for headers consisting of 2 × 8, 2 × 10, or 2 × 12 sizes shall be multiplied by 0.70 or the header or girder shall be designed.

TABLE R602.7(2)
GIRDER SPANS[a] AND HEADER SPANS[a] FOR INTERIOR BEARING WALLS
(Maximum spans for Douglas fir-larch, hem-fir, southern pine and spruce-pine-fir[b] and required number of jack studs)

HEADERS AND GIRDERS SUPPORTING	SIZE	BUILDING Width[c] (feet)					
		12		24		36	
		Span[e]	NJ[d]	Span[e]	NJ[d]	Span[e]	NJ[d]
One floor only	2-2 × 4	4-1	1	2-10	1	2-4	1
	2-2 × 6	6-1	1	4-4	1	3-6	1
	2-2 × 8	7-9	1	5-5	1	4-5	2
	2-2 × 10	9-2	1	6-6	2	5-3	2
	2-2 × 12	10-9	1	7-7	2	6-3	2
	3-2 × 8	9-8	1	6-10	1	5-7	1
	3-2 × 10	11-5	1	8-1	1	6-7	2
	3-2 × 12	13-6	1	9-6	2	7-9	2
	4-2 × 8	11-2	1	7-11	1	6-5	1
	4-2 × 10	13-3	1	9-4	1	7-8	1
	4-2 × 12	15-7	1	11-0	1	9-0	2
Two floors	2-2 × 4	2-7	1	1-11	1	1-7	1
	2-2 × 6	3-11	1	2-11	2	2-5	2
	2-2 × 8	5-0	1	3-8	2	3-1	2
	2-2 × 10	5-11	2	4-4	2	3-7	2
	2-2 × 12	6-11	2	5-2	2	4-3	3
	3-2 × 8	6-3	1	4-7	2	3-10	2
	3-2 × 10	7-5	1	5-6	2	4-6	2
	3-2 × 12	8-8	2	6-5	2	5-4	2
	4-2 × 8	7-2	1	5-4	1	4-5	2
	4-2 × 10	8-6	1	6-4	2	5-3	2
	4-2 × 12	10-1	1	7-5	2	6-2	2

For SI: 1 inch = 25.4 mm, 1 foot = 304.8 mm.

a. Spans are given in feet and inches.

b. Spans are based on minimum design properties for No. 2 grade lumber of Douglas fir-larch, hem-fir, Southern pine, and spruce-pine-fir.

c. Building width is measured perpendicular to the ridge. For widths between those shown, spans are permitted to be interpolated.

d. NJ = Number of jack studs required to support each end. Where the number of required jack studs equals one, the header is permitted to be supported by an approved framing anchor attached to the full-height wall stud and to the header.

e. Spans are calculated assuming the top of the header or girder is laterally braced by perpendicular framing. Where the top of the header or girder is not laterally braced (for example, cripple studs bearing on the header), tabulated spans for headers consisting of 2 × 8, 2 × 10, or 2 × 12 sizes shall be multiplied by 0.70 or the header or girder shall be designed.

TABLE R602.7(3)
GIRDER AND HEADER SPANS[a] FOR OPEN PORCHES
(Maximum span for Douglas fir-larch, hem-fir, Southern pine and spruce-pine-fir[b])

SIZE	SUPPORTING ROOF						SUPPORTING FLOOR	
	GROUND SNOW LOAD (psf)							
	30		50		70			
	DEPTH OF PORCH[c] (feet)							
	8	14	8	14	8	14	8	14
2-2 × 6	7-6	5-8	6-2	4-8	5-4	4-0	6-4	4-9
2-2 × 8	10-1	7-7	8-3	6-2	7-1	5-4	8-5	6-4
2-2 × 10	12-4	9-4	10-1	7-7	8-9	6-7	10-4	7-9
2-2 × 12	14-4	10-10	11-8	8-10	10-1	7-8	11-11	9-0

For SI: 1 inch = 25.4 mm, 1 foot = 304.8 mm, 1 pound per square foot = 0.0479 kPa.

a. Spans are given in feet and inches.

b. Tabulated values assume No. 2 grade lumber, wet service and incising for refractory species. Use 30 psf ground snow load for cases in which ground snow load is less than 30 psf and the roof live load is equal to or less than 20 psf.

c. Porch depth is measured horizontally from building face to centerline of the header. For depths between those shown, spans are permitted to be interpolated.

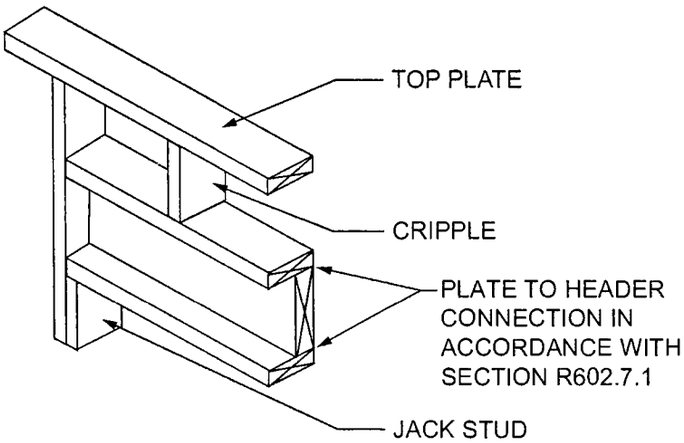

FIGURE R602.7.1(1)
SINGLE-MEMBER HEADER IN EXTERIOR BEARING WALL

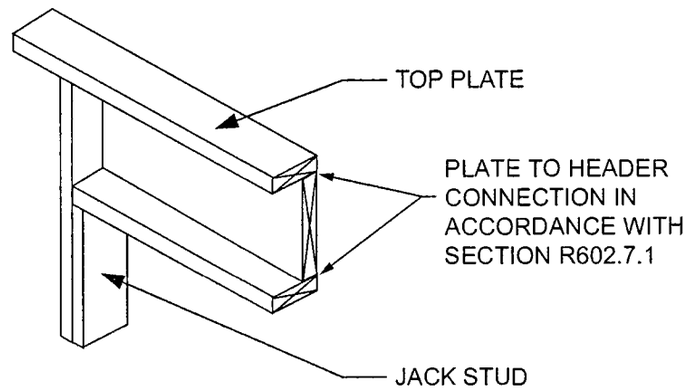

FIGURE R602.7.1(2)
ALTERNATIVE SINGLE-MEMBER HEADER WITHOUT CRIPPLE

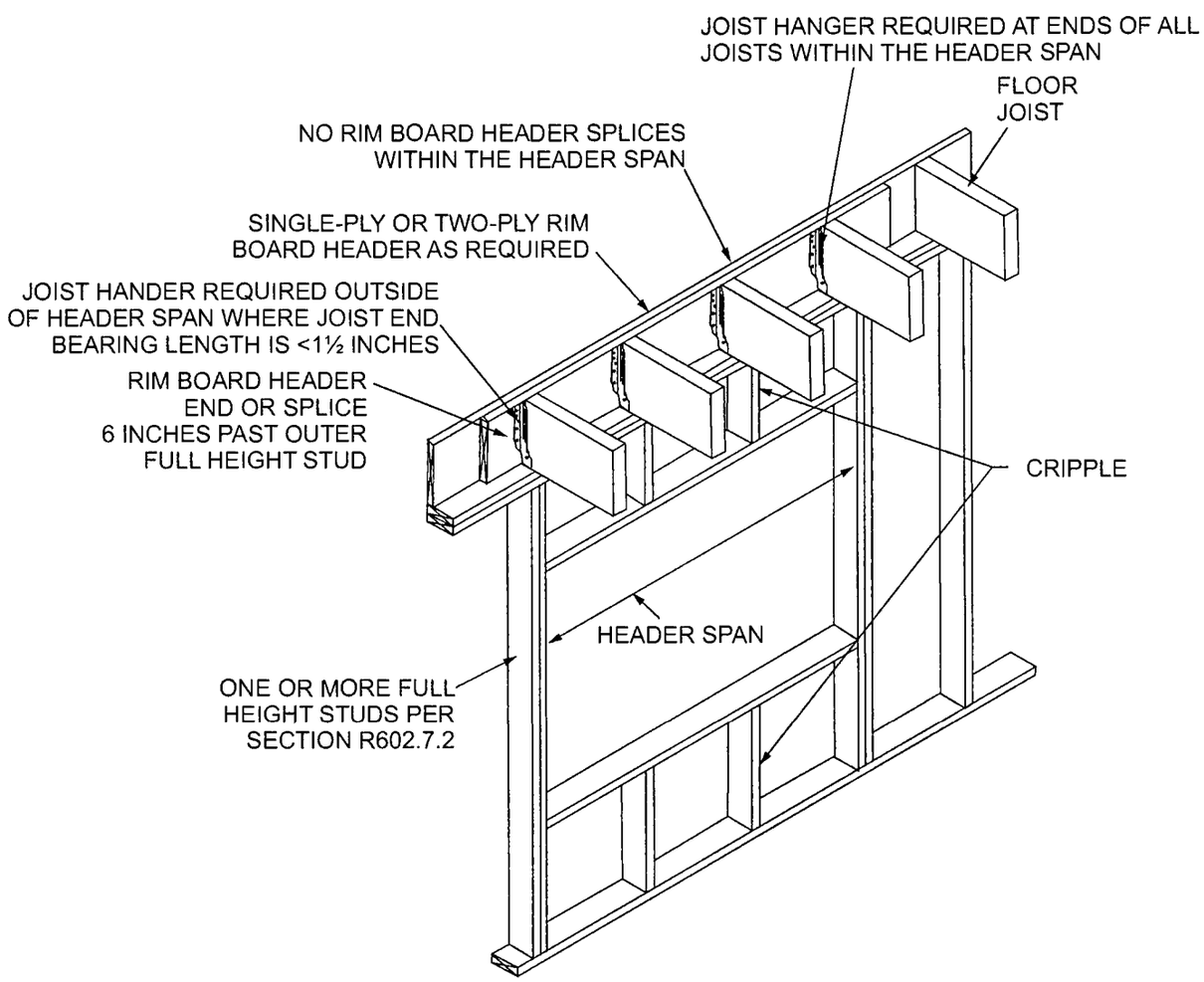

For SI: 25.4 mm = 1 inch.

FIGURE R602.7.2
RIM BOARD HEADER CONSTRUCTION

R602.7.4 Nonbearing walls. Load-bearing headers are not required in interior or exterior nonbearing walls. A single flat 2-inch by 4-inch (51 mm by 102 mm) member shall be permitted to be used as a header in interior or exterior nonbearing walls for openings up to 8 feet (2438 mm) in width if the vertical distance to the parallel nailing surface above is not more than 24 inches (610 mm). For such nonbearing headers, cripples or blocking are not required above the header.

R602.7.5 Supports for headers. Headers shall be supported on each end with one or more jack studs or with approved framing anchors in accordance with Table R602.7(1) or R602.7(2). The full-height stud adjacent to each end of the header shall be end nailed to each end of the header with four-16d nails (3.5 inches × 0.135 inches). The minimum number of full-height studs at each end of a header shall be in accordance with Table R602.7.5.

TABLE R602.7.5
MINIMUM NUMBER OF FULL-HEIGHT STUDS AT EACH END OF HEADERS IN EXTERIOR WALLS[a]

MAXIMUM HEADER SPAN (feet)	ULTIMATE DESIGN WIND SPEED AND EXPOSURE CATEGORY	
	< 140 mph, Exposure B or < 130 mph, Exposure C	≤ 115 mph, Exposure B[b]
4	1	1
6	2	1
8	2	1
10	3	2
12	3	2
14	3	2
16	4	2
18	4	2

For SI: 1 foot = 304.8 mm, 1 mile per hour = 0.447 m/s.

a. For header spans between those given, use the minimum number of full-height studs associated with the larger header span.

b. The tabulated minimum number of full-height studs is applicable where jack studs are provided to support the header at each end in accordance with Table R602.7(1). Where a framing anchor is used to support the header in lieu of a jack stud in accordance with Note d of Table R602.7(1), the minimum number of full-height studs at each end of a header shall be in accordance with requirements for wind speed < 140 mph, Exposure B.

R602.8 Fireblocking required. Fireblocking shall be provided in accordance with Section R302.11.

R602.9 Cripple walls. Foundation cripple walls shall be framed of studs not smaller than the studding above. Where exceeding 4 feet (1219 mm) in height, such walls shall be framed of studs having the size required for an additional story.

Cripple walls with a stud height less than 14 inches (356 mm) shall be continuously sheathed on one side with wood structural panels fastened to both the top and bottom plates in accordance with Table R602.3(1), or the cripple walls shall be constructed of solid blocking.

Cripple walls shall be supported on continuous foundations.

R602.10 Wall bracing. Buildings shall be braced in accordance with this section or, when applicable, Section R602.12. Where a building, or portion thereof, does not comply with one or more of the bracing requirements in this section, those portions shall be designed and constructed in accordance with Section R301.1.

R602.10.1 Braced wall lines. For the purpose of determining the amount and location of bracing required in each story level of a building, braced wall lines shall be designated as straight lines in the building plan placed in accordance with this section.

R602.10.1.1 Length of a braced wall line. The length of a braced wall line shall be the distance between its ends. The end of a braced wall line shall be the intersection with a perpendicular braced wall line, an angled braced wall line as permitted in Section R602.10.1.4 or an exterior wall as shown in Figure R602.10.1.1.

R602.10.1.2 Offsets along a braced wall line. Exterior walls parallel to a braced wall line shall be offset not more than 4 feet (1219 mm) from the designated braced wall line location as shown in Figure R602.10.1.1. Interior walls used as bracing shall be offset not more than 4 feet (1219 mm) from a braced wall line through the interior of the building as shown in Figure R602.10.1.1.

R602.10.1.3 Spacing of braced wall lines. The spacing between parallel braced wall lines shall be in accordance with Table R602.10.1.3. Intermediate braced wall lines through the interior of the building shall be permitted.

R602.10.1.4 Angled walls. Any portion of a wall along a braced wall line shall be permitted to angle out of plane for a maximum diagonal length of 8 feet (2438 mm). Where the angled wall occurs at a corner, the length of the braced wall line shall be measured from the projected corner as shown in Figure R602.10.1.4. Where the diagonal length is greater than 8 feet (2438 mm), it shall be considered to be a separate braced wall line and shall be braced in accordance with Section R602.10.1.

R602.10.2 Braced wall panels. Braced wall panels shall be full-height sections of wall that shall not have vertical or horizontal offsets. Braced wall panels shall be constructed and placed along a braced wall line in accordance with this section and the bracing methods specified in Section R602.10.4.

R602.10.2.1 Braced wall panel uplift load path. The bracing lengths in Table R602.10.3(1) apply only when uplift loads are resisted in accordance with Section R602.3.5.

R602.10.2.2 Locations of braced wall panels. A braced wall panel shall begin within 10 feet (3810 mm) from each end of a braced wall line as determined in Section R602.10.1.1. The distance between adjacent edges of braced wall panels along a braced wall line shall be not greater than 20 feet (6096 mm) as shown in Figure R602.10.2.2.

TABLE R602.7.3
MAXIMUM SPANS FOR WOOD STRUCTURAL PANEL BOX HEADERS[a]

HEADER CONSTRUCTION[b]	HEADER DEPTH (inches)	HOUSE DEPTH (feet)				
		24	26	28	30	32
Wood structural panel–one side	9	4	4	3	3	—
	15	5	5	4	3	3
Wood structural panel–both sides	9	7	5	5	4	3
	15	8	8	7	7	6

For SI: 1 inch = 25.4 mm, 1 foot = 304.8 mm.

a. Spans are based on single story with clear-span trussed roof or two story with floor and roof supported by interior-bearing walls.

b. See Figure R602.7.3 for construction details.

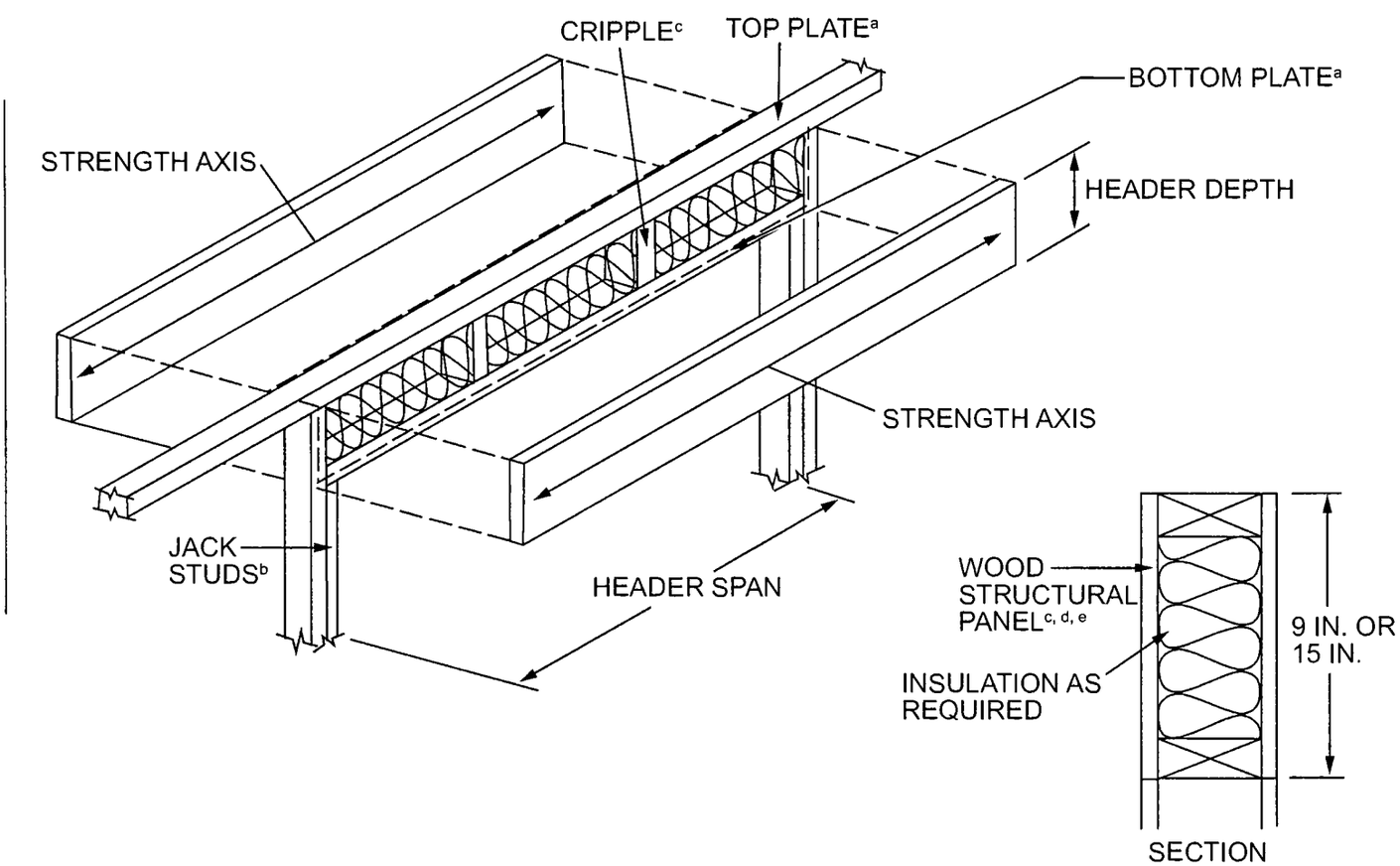

For SI: 1 inch = 25.4 mm, 1 foot = 304.8 mm.

NOTES:

a. The top and bottom plates shall be continuous at header location.

b. Jack studs shall be used for spans over 4 feet.

c. Cripple spacing shall be the same as for studs.

d. Wood structural panel faces shall be single pieces of $^{15}/_{32}$-inch-thick Exposure 1 (exterior glue) or thicker, installed on the interior or exterior or both sides of the header.

e. Wood structural panel faces shall be nailed to framing and cripples with 8d common or galvanized box nails spaced 3 inches on center, staggering alternate nails $^{1}/_{2}$ inch. Galvanized nails shall be hot-dipped or tumbled.

FIGURE R602.7.3
TYPICAL WOOD STRUCTURAL PANEL BOX HEADER CONSTRUCTION

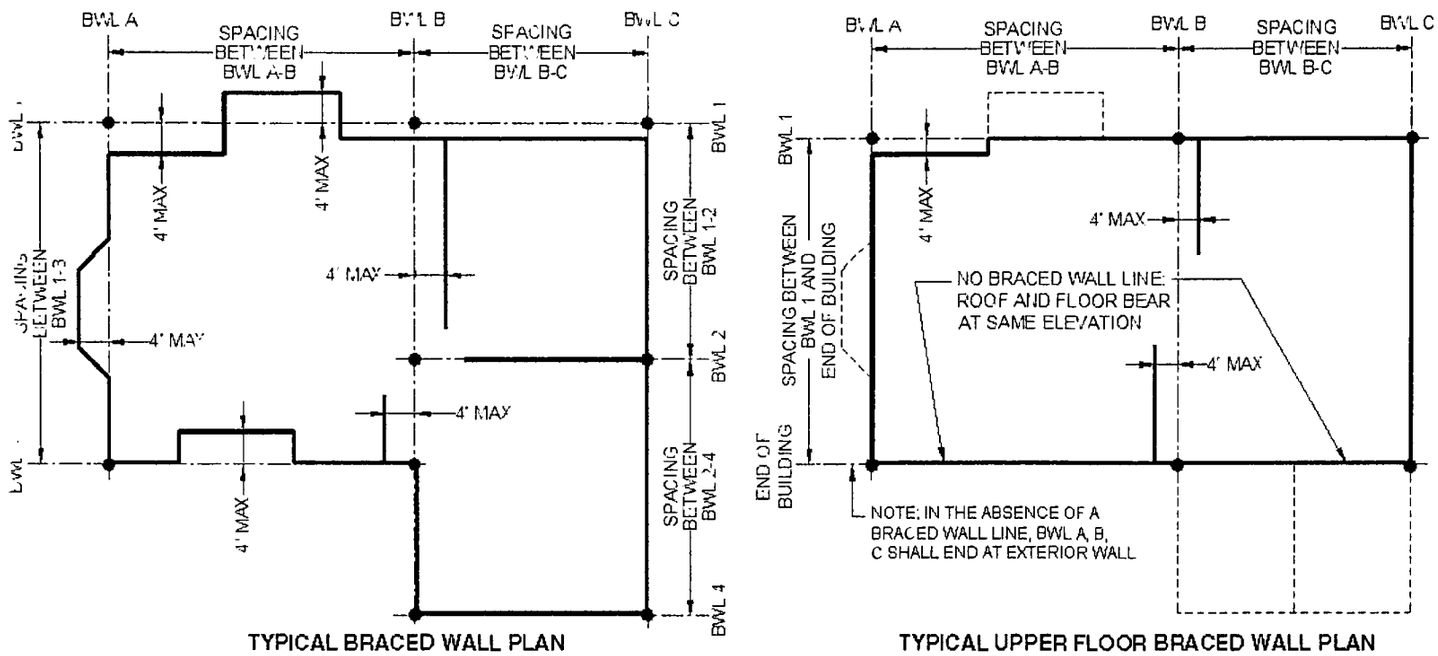

For SI: 1 foot = 304.8 mm.

FIGURE R602.10.1.1
BRACED WALL LINES

TABLE R602.10.1.3
BRACED WALL LINE SPACING

APPLICATION	CONDITION	BUILDING TYPE	BRACED WALL LINE SPACING CRITERIA	
			Maximum Spacing	Exception to Maximum Spacing
Wind bracing	Ultimate design wind speed 100 mph to < 140 mph	Detached, townhouse	60 feet	None
Seismic bracing	SDC A – C	Detached	Use wind bracing	
	SDC A – B	Townhouse	Use wind bracing	
	SDC C	Townhouse	35 feet	Up to 50 feet when length of required bracing per Table R602.10.3(3) is adjusted in accordance with Table R602.10.3(4).
	SDC D_0, D_1, D_2	Detached, townhouses, one- and two-story only	25 feet	Up to 35 feet to allow for a single room not to exceed 900 square feet. Spacing of all other braced wall lines shall not exceed 25 feet.
	SDC D_0, D_1, D_2	Detached, townhouse	25 feet	Up to 35 feet when length of required bracing per Table R602.10.3(3) is adjusted in accordance with Table R602.10.3(4).

For SI: 1 foot = 304.8 mm, 1 square foot = 0.0929 m^2, 1 mile per hour = 0.447 m/s.

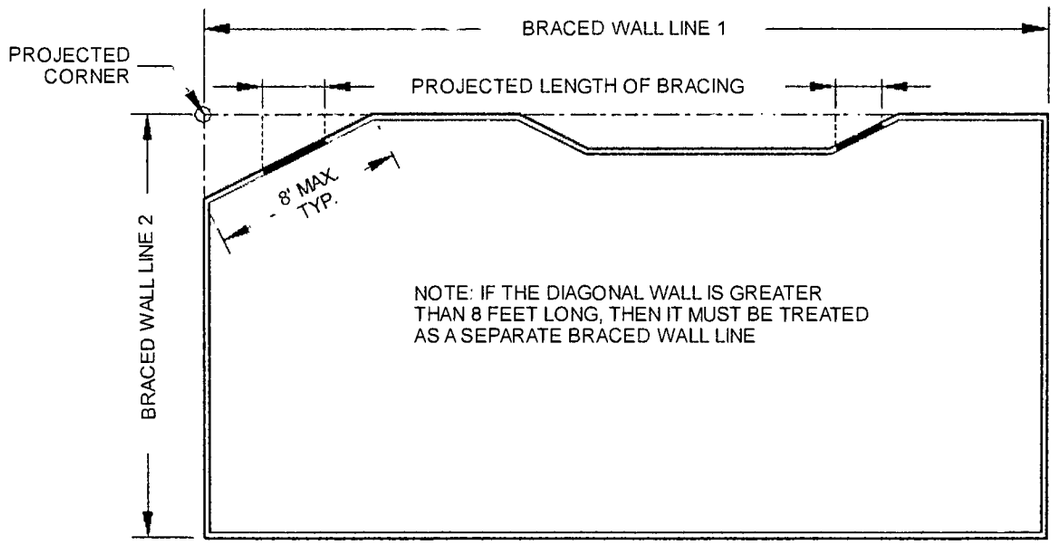

For SI: 1 foot = 304.8 mm.

FIGURE R602.10.1.4
ANGLED WALLS

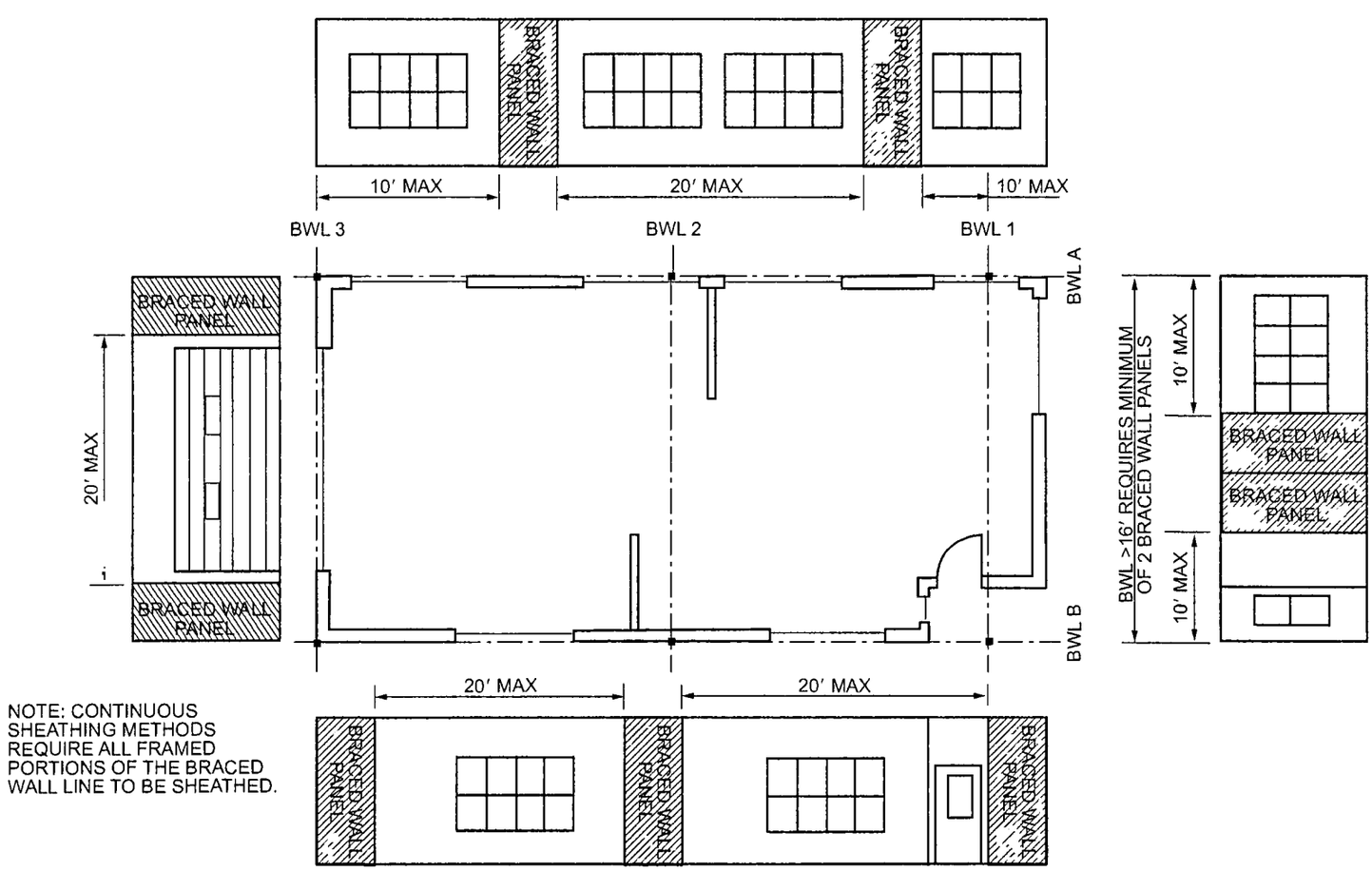

For SI: 1 foot = 304.8 mm.

FIGURE R602.10.2.2
LOCATION OF BRACED WALL PANELS

R602.10.2.2.1 Location of braced wall panels in Seismic Design Categories D_0, D_1 and D_2. Braced wall panels shall be located at each end of a braced wall line.

Exception: Braced wall panels constructed of Method WSP or BV-WSP and continuous sheathing methods as specified in Section R602.10.4 shall be permitted to begin not more than 10 feet (3048 mm) from each end of a braced wall line provided that each end complies with one of the following:

1. A minimum 24-inch-wide (610 mm) panel for Methods WSP, CS-WSP, CS-G and CS-PF is applied to each side of the building corner as shown in End Condition 4 of Figure R602.10.7.
2. The end of each braced wall panel closest to the end of the braced wall line shall have an 1,800 lb (8 kN) hold-down device fastened to the stud at the edge of the braced wall panel closest to the corner and to the foundation or framing below as shown in End Condition 5 of Figure R602.10.7.

R602.10.2.3 Minimum number of braced wall panels. Braced wall lines with a length of 16 feet (4877 mm) or less shall have not less than two braced wall panels of any length or one braced wall panel equal to 48 inches (1219 mm) or more. Braced wall lines greater than 16 feet (4877 mm) shall have not less than two braced wall panels.

R602.10.3 Required length of bracing. The required length of bracing along each braced wall line shall be determined as follows:

1. All buildings in Seismic Design Categories A and B shall use Table R602.10.3(1) and the applicable adjustment factors in Table R602.10.3(2).
2. Detached buildings in Seismic Design Category C shall use Table R602.10.3(1) and the applicable adjustment factors in Table R602.10.3(2).
3. Townhouses in Seismic Design Category C shall use the greater value determined from Table R602.10.3(1) or R602.10.3(3) and the applicable adjustment factors in Table R602.10.3(2) or R602.10.3(4), respectively.
4. All buildings in Seismic Design Categories D_0, D_1 and D_2 shall use the greater value determined from Table R602.10.3(1) or R602.10.3(3) and the applicable adjustment factors in Table R602.10.3(2) or R602.10.3(4), respectively.

Only braced wall panels parallel to the braced wall line shall contribute toward the required length of bracing of that braced wall line. Braced wall panels along an angled wall meeting the minimum length requirements of Tables R602.10.5 and R602.10.5.2 shall be permitted to contribute its projected length toward the minimum required length of bracing for the braced wall line as shown in Figure R602.10.1.4. Any braced wall panel on an angled wall at the end of a braced wall line shall contribute its projected length for only one of the braced wall lines at the projected corner.

Exception: The length of wall bracing for dwellings in Seismic Design Categories D_0, D_1 and D_2 with stone or masonry veneer installed in accordance with Section R703.8 and exceeding the first-story height shall be in accordance with Section R602.10.6.5.

R602.10.4 Construction methods for braced wall panels. Intermittent and continuously sheathed braced wall panels shall be constructed in accordance with this section and the methods listed in Table R602.10.4.

R602.10.4.1 Mixing methods. Mixing of bracing methods shall be permitted as follows:

1. Mixing intermittent bracing and continuous sheathing methods from story to story shall be permitted.
2. Mixing intermittent bracing methods from braced wall line to braced wall line within a story shall be permitted. In regions within Seismic Design Categories A, B and C where the ultimate design wind speed is less than or equal to 130 mph (58m/s), mixing of intermittent bracing and continuous sheathing methods from braced wall line to braced wall line within a story shall be permitted.
3. Mixing intermittent bracing methods along a braced wall line shall be permitted in Seismic Design Categories A and B, and detached dwellings in Seismic Design Category C, provided that the length of required bracing in accordance with Table R602.10.3(1) or R602.10.3(3) is the highest value of all intermittent bracing methods used.
4. Mixing of continuous sheathing methods CS-WSP, CS-G and CS-PF along a braced wall line shall be permitted. Intermittent methods ABW, PFH and PFG shall be permitted to be used along a braced wall line with continuous sheathed methods, provided that the length of required bracing for that braced wall line is determined in accordance with Table R602.10.3(1) or R602.10.3(3) using the highest value of the bracing methods used.
5. In Seismic Design Categories A and B, and for detached one- and two-family dwellings in Seismic Design Category C, mixing of intermittent bracing methods along the interior portion of a braced wall line with continuous sheathing methods CS-WSP, CS-G and CS-PF along the exterior portion of the same braced wall line shall be permitted. The length of required bracing shall be the highest value of all intermittent bracing methods used in accordance with Table R602.10.3(1) or R602.10.3(3) as adjusted by Tables R602.10.3(2) and R602.10.3(4), respectively. The requirements of Section R602.10.7 shall apply to each end of the continuously sheathed portion of the braced wall line.

TABLE R602.10.3(1)
BRACING REQUIREMENTS BASED ON WIND SPEED

• EXPOSURE CATEGORY B • 30-FOOT MEAN ROOF HEIGHT • 10-FOOT WALL HEIGHT • 2 BRACED WALL LINES			MINIMUM TOTAL LENGTH (FEET) OF BRACED WALL PANELS REQUIRED ALONG EACH BRACED WALL LINE[a]			
Ultimate Design Wind Speed (mph)	Story Location	Braced Wall Line Spacing[c] (feet)	Method LIB[b]	Method GB	Methods DWB, WSP, SFB, PBS, PCP, HPS, BV-WSP, ABW, PFH, PFC, CS-SFB	Methods CS-WSP, CS-G, CS-PF
≤ 110	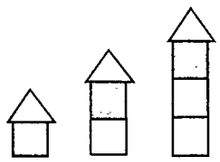	10	3.5	3.5	2.0	1.5
		20	6.0	6.0	3.5	3.0
		30	8.5	8.5	5.0	4.5
		40	11.5	11.5	6.5	5.5
		50	14.0	14.0	8.0	7.0
		60	16.5	16.5	9.5	8.0
	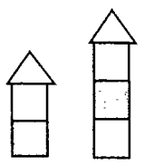	10	6.5	6.5	3.5	3.0
		20	11.5	11.5	6.5	5.5
		30	16.5	16.5	9.5	8.0
		40	21.5	21.5	12.5	10.5
		50	26.5	26.5	15.5	13.0
		60	31.5	31.5	18.0	15.5
	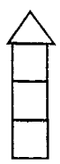	10	NP	9.5	5.5	4.5
		20	NP	17.0	10.0	8.5
		30	NP	24.5	14.0	12.0
		40	NP	32.0	18.5	15.5
		50	NP	39.5	22.5	19.0
		60	NP	46.5	26.5	23.0
≤ 115	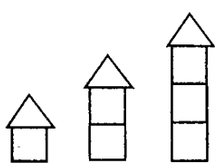	10	3.5	3.5	2.0	2.0
		20	6.5	6.5	3.5	3.5
		30	9.5	9.5	5.5	4.5
		40	12.5	12.5	7.0	6.0
		50	15.0	15.0	9.0	7.5
		60	18.0	18.0	10.5	9.0
	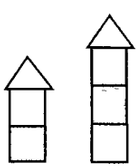	10	7.0	7.0	4.0	3.5
		20	12.5	12.5	7.5	6.5
		30	18.0	18.0	10.5	9.0
		40	23.5	23.5	13.5	11.5
		50	29.0	29.0	16.5	14.0
		60	34.5	34.5	20.0	17.0
	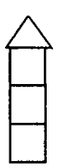	10	NP	10.0	6.0	5.0
		20	NP	18.5	11.0	9.0
		30	NP	27.0	15.5	13.0
		40	NP	35.0	20.0	17.0
		50	NP	43.0	24.5	21.0
		60	NP	51.0	29.0	25.0

(continued)

TABLE R602.10.3(1)—continued
BRACING REQUIREMENTS BASED ON WIND SPEED

• EXPOSURE CATEGORY B • 30-FOOT MEAN ROOF HEIGHT • 10-FOOT WALL HEIGHT • 2 BRACED WALL LINES			MINIMUM TOTAL LENGTH (FEET) OF BRACED WALL PANELS REQUIRED ALONG EACH BRACED WALL LINE[a]			
Ultimate Design Wind Speed (mph)	Story Location	Braced Wall Line Spacing[c] (feet)	Method LIB[b]	Method GB	Methods DWB, WSP, SFB, PBS, PCP, HPS, BV-WSP, ABW, PFH, PFG, CS-SFB	Methods CS-WSP, CS-G, CS-PF
≤ 120	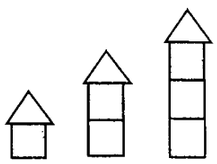	10	4.0	4.0	2.5	2.0
		20	7.0	7.0	4.0	3.5
		30	10.5	10.5	6.0	5.0
		40	13.5	13.5	8.0	6.5
		50	16.5	16.5	9.5	8.0
		60	19.5	19.5	11.5	9.5
	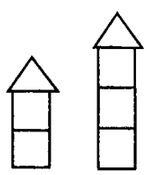	10	7.5	7.5	4.5	3.5
		20	14.0	14.0	8.0	7.0
		30	20.0	20.0	11.5	9.5
		40	25.5	25.5	15.0	12.5
		50	31.5	31.5	18.0	15.5
		60	37.5	37.5	21.5	18.5
	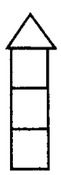	10	NP	11.0	6.5	5.5
		20	NP	20.5	11.5	10.0
		30	NP	29.0	17.0	14.5
		40	NP	38.0	22.0	18.5
		50	NP	47.0	27.0	23.0
		60	NP	55.5	32.0	27.0
≤ 130	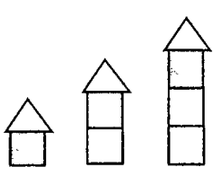	10	4.5	4.5	2.5	2.5
		20	8.5	8.5	5.0	4.0
		30	12.0	12.0	7.0	6.0
		40	15.5	15.5	9.0	7.5
		50	19.5	19.5	11.0	9.5
		60	23.0	23.0	13.0	11.0
	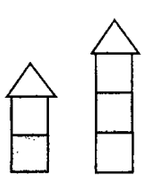	10	8.5	8.5	5.0	4.5
		20	16.0	16.0	9.5	8.0
		30	23.0	23.0	13.5	11.5
		40	30.0	30.0	17.5	15.0
		50	37.0	37.0	21.5	18.0
		60	44.0	44.0	25.0	21.5
	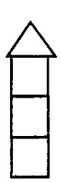	10	NP	13.0	7.5	6.5
		20	NP	24.0	13.5	11.5
		30	NP	34.5	19.5	17.0
		40	NP	44.5	25.5	22.0
		50	NP	55.0	31.5	26.5
		60	NP	65.0	37.5	31.5

(continued)

TABLE R602.10.3(1)—continued
BRACING REQUIREMENTS BASED ON WIND SPEED

• EXPOSURE CATEGORY B • 30-FOOT MEAN ROOF HEIGHT • 10-FOOT WALL HEIGHT • 2 BRACED WALL LINES			MINIMUM TOTAL LENGTH (FEET) OF BRACED WALL PANELS REQUIRED ALONG EACH BRACED WALL LINE[a]			
Ultimate Design Wind Speed (mph)	Story Location	Braced Wall Line Spacing[c] (feet)	Method LIB[b]	Method GB	Methods DWB, WSP, SFB, PBS, PCP, HPS, BV-WSP, ABW, PFH, PFG, CS-SFB	Methods CS-WSP, CS-G, CS-PF
< 140	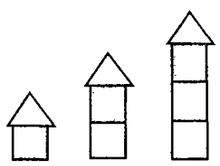	10	5.5	5.5	3.0	2.5
		20	10.0	10.0	5.5	5.0
		30	14.0	14.0	8.0	7.0
		40	18.0	18.0	10.5	9.0
		50	22.5	22.5	13.0	11.0
		60	26.5	26.5	15.0	13.0
	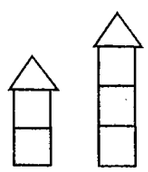	10	10.0	10.0	6.0	5.0
		20	18.5	18.5	11.0	9.0
		30	27.0	27.0	15.5	13.0
		40	35.0	35.0	20.0	17.0
		50	43.0	43.0	24.5	21.0
		60	51.0	51.0	29.0	25.0
	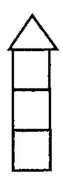	10	NP	15.0	8.5	7.5
		20	NP	27.5	16.0	13.5
		30	NP	39.5	23.0	19.5
		40	NP	51.5	29.5	25.0
		50	NP	63.5	36.5	31.0
		60	NP	75.5	43.0	36.5

For SI: 1 inch = 25.4 mm, 1 foot = 304.8 mm, 1 mile per hour = 0.447 m/s.

NP = Not Permitted.

a. Linear interpolation shall be permitted.

b. Method LIB shall have gypsum board fastened to not less than one side with nails or screws in accordance with Table R602.3(1) for exterior sheathing or Table R702.3.5 for interior gypsum board. Spacing of fasteners at panel edges shall not exceed 8 inches.

c. Where three or more parallel braced wall lines are present and the distances between adjacent braced wall lines are different, the average dimension shall be permitted to be used for braced wall line spacing.

TABLE R602.10.3(2)
WIND ADJUSTMENT FACTORS TO THE REQUIRED LENGTH OF WALL BRACING

ITEM NUMBER	ADJUSTMENT BASED ON	STORY/SUPPORTING	CONDITION	ADJUSTMENT FACTOR[a, b] [multiply length from Table R602.10.3(1) by this factor]	APPLICABLE METHODS
1	Exposure category[d]	One-story structure	B	1.00	All methods
			C	1.20	
			D	1.50	
		Two-story structure	B	1.00	
			C	1.30	
			D	1.60	
		Three-story structure	B	1.00	
			C	1.40	
			D	1.70	
2	Roof eave-to-ridge height	Roof only	≤ 5 feet	0.70	
			10 feet	1.00	
			15 feet	1.30	
			20 feet	1.60	
		Roof + 1 floor	≤ 5 feet	0.85	
			10 feet	1.00	
			15 feet	1.15	
			20 feet	1.30	
		Roof + 2 floors	≤ 5 feet	0.90	
			10 feet	1.00	
			15 feet	1.10	
			20 feet	Not permitted	
3	Story height (Section R301.3)	Any story	8 feet	0.90	
			9 feet	0.95	
			10 feet	1.00	
			11 feet	1.05	
			12 feet	1.10	
4	Number of braced wall lines (per plan direction)[c]	Any story	2	1.00	
			3	1.30	
			4	1.45	
			≥ 5	1.60	
5	Additional 800-pound hold-down device	Top story only	Fastened to the end studs of each braced wall panel and to the foundation or framing below	0.80	DWB, WSP, SFB, PBS, PCP, HPS
6	Interior gypsum board finish (or equivalent)	Any story	Omitted from inside face of braced wall panels	1.40	DWB, WSP, SFB, PBS, PCP, HPS, CS-WSP, CS-G, CS-SFB
7	Gypsum board fastening	Any story	4 inches o.c. at panel edges, including top and bottom plates, and all horizontal joints blocked	0.7	GB
8	Horizontal blocking	Any story	Horizontal block is omitted	2.0	WSP, CS-WSP

For SI: 1 inch = 25.4 mm, 1 foot = 304.8 mm, 1 pound = 4.48 N.

a. Linear interpolation shall be permitted.

b. The total adjustment factor is the product of all applicable adjustment factors.

c. The adjustment factor is permitted to be 1.0 when determining bracing amounts for intermediate braced wall lines provided the bracing amounts on adjacent braced wall lines are based on a spacing and number that neglects the intermediate braced wall line.

d. The same adjustment factor shall be applied to all braced wall lines on all floors of the structure, based on the worst-case exposure category.

TABLE R602.10.3(3)
BRACING REQUIREMENTS BASED ON SEISMIC DESIGN CATEGORY

• SOIL CLASS D[b] • WALL HEIGHT = 10 FEET • 10 PSF FLOOR DEAD LOAD • 15 PSF ROOF/CEILING DEAD LOAD • BRACED WALL LINE SPACING ≤ 25 FEET			MINIMUM TOTAL LENGTH (FEET) OF BRACED WALL PANELS REQUIRED ALONG EACH BRACED WALL LINE[a,f]				
Seismic Design Category	Story Location	Braced Wall Line Length (feet)[c]	Method LIB[d]	Method GB	Methods DWB, SFB, PBS, PCP, HPS, CS-SFB[e]	Method WSP	Methods CS-WSP, CS-G, CS-PF
C (townhouses only)	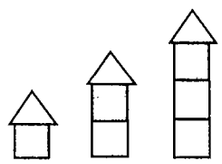	10	2.5	2.5	2.5	1.6	1.4
		20	5.0	5.0	5.0	3.2	2.7
		30	7.5	7.5	7.5	4.8	4.1
		40	10.0	10.0	10.0	6.4	5.4
		50	12.5	12.5	12.5	8.0	6.8
	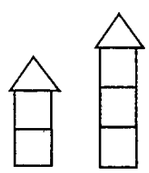	10	NP	4.5	4.5	3.0	2.6
		20	NP	9.0	9.0	6.0	5.1
		30	NP	13.5	13.5	9.0	7.7
		40	NP	18.0	18.0	12.0	10.2
		50	NP	22.5	22.5	15.0	12.8
	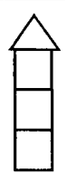	10	NP	6.0	6.0	4.5	3.8
		20	NP	12.0	12.0	9.0	7.7
		30	NP	18.0	18.0	13.5	11.5
		40	NP	24.0	24.0	18.0	15.3
		50	NP	30.0	30.0	22.5	19.1
D_0	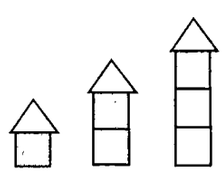	10	NP	2.8	2.8	1.8	1.6
		20	NP	5.5	5.5	3.6	3.1
		30	NP	8.3	8.3	5.4	4.6
		40	NP	11.0	11.0	7.2	6.1
		50	NP	13.8	13.8	9.0	7.7
	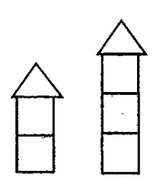	10	NP	5.3	5.3	3.8	3.2
		20	NP	10.5	10.5	7.5	6.4
		30	NP	15.8	15.8	11.3	9.6
		40	NP	21.0	21.0	15.0	12.8
		50	NP	26.3	26.3	18.8	16.0
	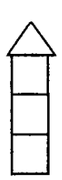	10	NP	7.3	7.3	5.3	4.5
		20	NP	14.5	14.5	10.5	9.0
		30	NP	21.8	21.8	15.8	13.4
		40	NP	29.0	29.0	21.0	17.9
		50	NP	36.3	36.3	26.3	22.3

(continued)

TABLE R602.10.3(3)—continued
BRACING REQUIREMENTS BASED ON SEISMIC DESIGN CATEGORY

• SOIL CLASS D[b] • WALL HEIGHT = 10 FEET • 10 PSF FLOOR DEAD LOAD • 15 PSF ROOF/CEILING DEAD LOAD • BRACED WALL LINE SPACING ≤ 25 FEET			MINIMUM TOTAL LENGTH (FEET) OF BRACED WALL PANELS REQUIRED ALONG EACH BRACED WALL LINE[a, f]				
Seismic Design Category	Story Location	Braced Wall Line Length (feet)[c]	Method LIB[d]	Method GB	Methods DWB, SFB, PBS, PCP, HPS, CS-SFB[e]	Method WSP	Methods CS-WSP, CS-G, CS-PF
D_1	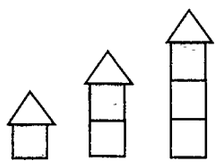	10	NP	3.0	3.0	2.0	1.7
		20	NP	6.0	6.0	4.0	3.4
		30	NP	9.0	9.0	6.0	5.1
		40	NP	12.0	12.0	8.0	6.8
		50	NP	15.0	15.0	10.0	8.5
	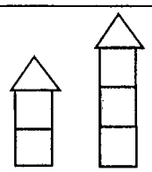	10	NP	6.0	6.0	4.5	3.8
		20	NP	12.0	12.0	9.0	7.7
		30	NP	18.0	18.0	13.5	11.5
		40	NP	24.0	24.0	18.0	15.3
		50	NP	30.0	30.0	22.5	19.1
	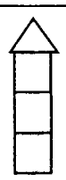	10	NP	8.5	8.5	6.0	5.1
		20	NP	17.0	17.0	12.0	10.2
		30	NP	25.5	25.5	18.0	15.3
		40	NP	34.0	34.0	24.0	20.4
		50	NP	42.5	42.5	30.0	25.5
D_2	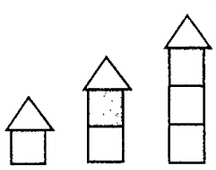	10	NP	4.0	4.0	2.5	2.1
		20	NP	8.0	8.0	5.0	4.3
		30	NP	12.0	12.0	7.5	6.4
		40	NP	16.0	16.0	10.0	8.5
		50	NP	20.0	20.0	12.5	10.6
	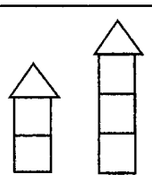	10	NP	7.5	7.5	5.5	4.7
		20	NP	15.0	15.0	11.0	9.4
		30	NP	22.5	22.5	16.5	14.0
		40	NP	30.0	30.0	22.0	18.7
		50	NP	37.5	37.5	27.5	23.4
	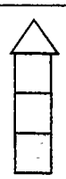	10	NP	NP	NP	NP	NP
		20	NP	NP	NP	NP	NP
		30	NP	NP	NP	NP	NP
		40	NP	NP	NP	NP	NP
		50	NP	NP	NP	NP	NP
	Cripple wall below one- or two-story dwelling	10	NP	NP	NP	7.5	6.4
		20	NP	NP	NP	15.0	12.8
		30	NP	NP	NP	22.5	19.1
		40	NP	NP	NP	30.0	25.5
		50	NP	NP	NP	37.5	31.9

For SI: 1 inch = 25.4 mm, 1 foot = 304.8 mm, 1 pound per square foot = 0.0479 kPa.

NP = Not Permitted.

a. Linear interpolation shall be permitted.

b. Wall bracing lengths are based on a soil site class "D." Interpolation of bracing length between the S_{ds} values associated with the seismic design categories shall be permitted when a site-specific S_{ds} value is determined in accordance with Section 1613.2 of the *California Building Code*.

c. Where the braced wall line length is greater than 50 feet, braced wall lines shall be permitted to be divided into shorter segments having lengths of 50 feet or less, and the amount of bracing within each segment shall be in accordance with this table.

d. Method LIB shall have gypsum board fastened to not less than one side with nails or screws in accordance with Table R602.3(1) for exterior sheathing or Table R702.3.5 for interior gypsum board. Spacing of fasteners at panel edges shall not exceed 8 inches.

e. Methods PFG and CS-SFB do not apply in Seismic Design Categories D_0, D_1 and D_2.

f. Where more than one bracing method is used, mixing methods shall be in accordance with Section R602.10.4.1.

TABLE R602.10.3(4)
SEISMIC ADJUSTMENT FACTORS TO THE REQUIRED LENGTH OF WALL BRACING

ITEM NUMBER	ADJUSTMENT BASED ON	STORY	CONDITION	ADJUSTMENT FACTOR[a, b] [Multiply length from Table R602.10.3(3) by this factor]	APPLICABLE METHODS
1	Story height (Section 301.3)	Any story	≤ 10 feet	1.0	All methods
			> 10 feet and ≤ 12 feet	1.2	
2	Braced wall line spacing, townhouses in SDC C	Any story	≤ 35 feet	1.0	
			> 35 feet and ≤ 50 feet	1.43	
3	Braced wall line spacing, in SDC D_0, D_1, D_2[c]	Any story	> 25 feet and ≤ 30 feet	1.2	
			> 30 feet and ≤ 35 feet	1.4	
4	Wall dead load	Any story	> 8 psf and < 15 psf	1.0	
			< 8 psf	0.85	
5	Roof/ceiling dead load for wall supporting	1-, 2- or 3-story building	≤15 psf	1.0	
		2- or 3-story building	> 15 psf and ≤ 25 psf	1.1	
		1-story building or top story	> 15 psf and ≤ 25 psf	1.2	
6	Walls with stone or masonry veneer, townhouses in SDC C[d, e]	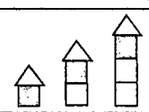	1.0		All methods
		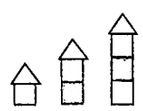	1.5		
		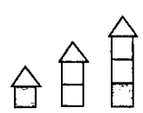	1.5		
7	Walls with stone or masonry veneer, detached one- and two-family dwellings in SDC $D_0 - D_2$[d, f]	Any story	See Table R602.10.6.5		BV-WSP
8	Walls with stone or masonry veneer, detached one- and two-family dwellings in SDC $D_0 - D_2$[d, f]	First and second story of two-story dwelling	See Table R602.10.6.5	1.2	WSP, CS-WSP
9	Interior gypsum board finish (or equivalent)	Any story	Omitted from inside face of braced wall panels	1.5	DWB, WSP, SFB, PBS, PCP, HPS, CS-WSP, CS-G, CS-SFB
10	Horizontal blocking	Any story	Horizontal blocking omitted	2.0	WSP, CS-WSP

For SI: 1 foot = 304.8 mm, 1 pound per square foot = 0.0479 kPa.

a. Linear interpolation shall be permitted.

b. The total length of bracing required for a given wall line is the product of all applicable adjustment factors.

c. The length-to-width ratio for the floor/roof diaphragm shall not exceed 3:1.

d. Applies to stone or masonry veneer exceeding the first story height.

e. The adjustment factor for stone or masonry veneer shall be applied to all exterior braced wall lines and all braced wall lines on the interior of the building, backing or perpendicular to and laterally supporting veneered walls.

f. See Section R602.10.6.5 for requirements where stone or masonry veneer does not exceed the first-story height.

TABLE R602.10.4
BRACING METHODS

METHODS, MATERIAL		MINIMUM THICKNESS	FIGURE	CONNECTION CRITERIA[a]	
				Fasteners	Spacing
Intermittent Bracing Methods	**LIB** Let-in-bracing	1 × 4 wood or approved metal straps at 45° to 60° angles for maximum 16″ stud spacing		Wood: 2-8d common nails or 3-8d ($2^1/_2$″ long x 0.113″ dia.) nails	Wood: per stud and top and bottom plates
				Metal strap: per manufacturer	Metal: per manufacturer
	DWB Diagonal wood boards	$^3/_4$″ (1″ nominal) for maximum 24″ stud spacing	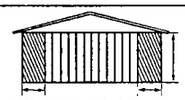	2-8d ($2^1/_2$″ long × 0.113″ dia.) nails or 2 - $1^3/_4$″ long staples	Per stud
	WSP Wood structural panel (See Section R604)	$^3/_8$″	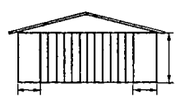	Exterior sheathing per Table R602.3(3)	6″ edges 12″ field
				Interior sheathing per Table R602.3(1) or R602.3(2)	Varies by fastener
	BV-WSP[e] Wood structural panels with stone or masonry veneer (See Section R602.10.6.5)	$^7/_{16}$″	See Figure R602.10.6.5	8d common ($2^1/_2$″ × 0.131) nails	4″ at panel edges 12″ at intermediate supports 4″ at braced wall panel end posts
	SFB Structural fiberboard sheathing	$^1/_2$″ or $^{25}/_{32}$″ for maximum 16″ stud spacing	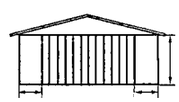	$1^1/_2$″ long × 0.12″ dia. (for $^1/_2$″ thick sheathing) $1^3/_4$″ long × 0.12″ dia. (for $^{25}/_{32}$″ thick sheathing) galvanized roofing nails	3″ edges 6″ field
	GB Gypsum board	$^1/_2$″	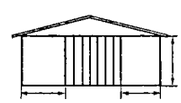	Nails or screws per Table R602.3(1) for exterior locations	For all braced wall panel locations: 7″ edges (including top and bottom plates) 7″ field
				Nails or screws per Table R702.3.5 for interior locations	
	PBS Particleboard sheathing (See Section R605)	$^3/_8$″ or $^1/_2$″ for maximum 16″ stud spacing	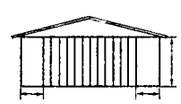	For $^3/_8$″, 6d common (2″ long × 0.113″ dia.) nails For $^1/_2$″, 8d common ($2^1/_2$″ long × 0.131″ dia.) nails	3″ edges 6″ field
	PCP Portland cement plaster	See Section R703.7 for maximum 16″ stud spacing	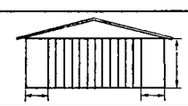	$1^1/_2$″ long, 11 gage, $^7/_{16}$″ dia. head nails or $^7/_8$″ long, 16 gage staples	6″ o.c. on all framing members
	HPS Hardboard panel siding	$^7/_{16}$″ for maximum 16″ stud spacing	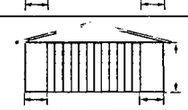	0.092″ dia., 0.225″ dia. head nails with length to accommodate $1^1/_2$″ penetration into studs	4″ edges 8″ field
	ABW Alternate braced wall	$^7/_8$″	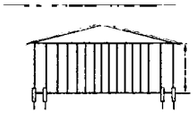	See Section R602.10.6.1	See Section R602.10.6.1

(continued)

TABLE R602.10.4—continued
BRACING METHODS

METHODS, MATERIAL		MINIMUM THICKNESS	FIGURE	CONNECTION CRITERIA[a]	
				Fasteners	Spacing
Intermittent Bracing Methods	**PFH** Portal frame with hold-downs	$^{3}/_{8}$"	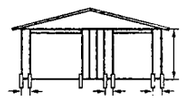	See Section R602.10.6.2	See Section R602.10.6.2
	PFG Portal frame at garage	$^{7}/_{16}$"	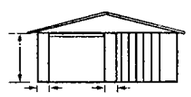	See Section R602.10.6.3	See Section R602.10.6.3
Continuous Sheathing Methods	**CS-WSP** Continuously sheathed wood structural panel	$^{3}/_{8}$"	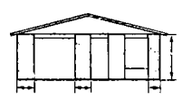	Exterior sheathing per Table R602.3(3)	6" edges 12" field
				Interior sheathing per Table R602.3(1) or R602.3(2)	Varies by fastener
	CS-G[b, c] Continuously sheathed wood structural panel adjacent to garage openings	$^{3}/_{8}$"		See Method CS-WSP	See Method CS-WSP
	CS-PF Continuously sheathed portal frame	$^{7}/_{16}$"	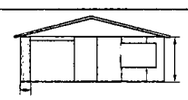	See Section R602.10.6.4	See Section R602.10.6.4
	CS-SFB[d] Continuously sheathed structural fiberboard	$^{1}/_{2}$" or $^{25}/_{32}$" for maximum 16" stud spacing	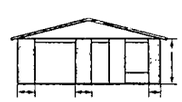	$1^{1}/_{2}$" long × 0.12" dia. (for $^{1}/_{2}$" thick sheathing) $1^{3}/_{4}$" long × 0.12" dia. (for $^{25}/_{32}$" thick sheathing) galvanized roofing nails	3" edges 6" field

For SI: 1 inch = 25.4 mm, 1 foot = 304.8 mm, 1 degree = 0.0175 rad, 1 pound per square foot = 47.8 N/m^2, 1 mile per hour = 0.447 m/s.

a. Adhesive attachment of wall sheathing, including Method GB, shall not be permitted in Seismic Design Categories C, D_0, D_1 and D_2.

b. Applies to panels next to garage door opening where supporting gable end wall or roof load only. Shall only be used on one wall of the garage. In Seismic Design Categories D_0, D_1 and D_2, roof covering dead load shall not exceed 3 psf.

c. Garage openings adjacent to a Method CS-G panel shall be provided with a header in accordance with Table R602.7(1). A full-height clear opening shall not be permitted adjacent to a Method CS-G panel.

d. Method CS-SFB does not apply in Seismic Design Categories D_0, D_1 and D_2.

e. Method applies to detached one- and two-family dwellings in Seismic Design Categories D_0 through D_2 only.

R602.10.4.2 Continuous sheathing methods. Continuous sheathing methods require structural panel sheathing to be used on all sheathable surfaces on one side of a braced wall line including areas above and below openings and gable end walls and shall meet the requirements of Section R602.10.7.

R602.10.4.3 Braced wall panel interior finish material. Braced wall panels shall have gypsum wall board installed on the side of the wall opposite the bracing material. Gypsum wall board shall be not less than $^1/_2$ inch (12.7 mm) in thickness and be fastened with nails or screws in accordance with Table R602.3(1) for exterior sheathing or Table R702.3.5 for interior gypsum wall board. Spacing of fasteners at panel edges for gypsum wall board opposite Method LIB bracing shall not exceed 8 inches (203 mm). Interior finish material shall not be glued in Seismic Design Categories D_0, D_1 and D_2.

Exceptions:

1. Interior finish material is not required opposite wall panels that are braced in accordance with Methods GB, BV-WSP, ABW, PFH, PFG and CS-PF, unless otherwise required by Section R302.6.
2. An approved interior finish material with an in-plane shear resistance equivalent to gypsum board shall be permitted to be substituted, unless otherwise required by Section R302.6.
3. Except for Method LIB, gypsum wall board is permitted to be omitted provided that the required length of bracing in Tables R602.10.3(1) and R602.10.3(3) is multiplied by the appropriate adjustment factor in Tables R602.10.3(2) and R602.10.3(4), respectively, unless otherwise required by Section R302.6.

R602.10.4.4 Panel joints. Vertical joints of panel sheathing shall occur over and be fastened to common studs. Horizontal joints of panel sheathing in braced wall panels shall occur over and be fastened to common blocking of a thickness of $1^1/_2$ inches (38 mm) or greater.

Exceptions:

1. For methods WSP and CS-WSP, blocking of horizontal joints is permitted to be omitted when adjustment factor No. 8 of Table R602.10.3(2) or No. 9 of Table R602.10.3(4) is applied.
2. Vertical joints of panel sheathing shall be permitted to occur over double studs, where adjoining panel edges are attached to separate studs with the required panel edge fastening schedule, and the adjacent studs are attached together with two rows of 10d box nails [3 inches by 0.128 inch (76.2 mm by 3.25 mm)] at 10 inches o.c. (254 mm).
3. Blocking at horizontal joints shall not be required in wall segments that are not counted as braced wall panels.
4. Where Method GB panels are installed horizontally, blocking of horizontal joints is not required.

R602.10.5 Minimum length of a braced wall panel. The minimum length of a braced wall panel shall comply with Table R602.10.5. For Methods CS-WSP and CS-SFB, the minimum panel length shall be based on the adjacent clear opening height in accordance with Table R602.10.5 and Figure R602.10.5. Where a panel has an opening on either side of differing heights, the taller opening height shall be used to determine the panel length.

R602.10.5.1 Contributing length. For purposes of computing the required length of bracing in Tables R602.10.3(1) and R602.10.3(3), the contributing length of each braced wall panel shall be as specified in Table R602.10.5.

R602.10.5.2 Partial credit. For Methods DWB, WSP, SFB, PBS, PCP and HPS in Seismic Design Categories A, B and C, panels between 36 inches and 48 inches (914 mm and 1219 mm) in length shall be considered a braced wall panel and shall be permitted to partially contribute toward the required length of bracing in Tables R602.10.3(1) and R602.10.3(3), and the contributing length shall be determined from Table R602.10.5.2.

R602.10.6 Construction of Methods ABW, PFH, PFG, CS-PF and BV-WSP. Methods ABW, PFH, PFG, CS-PF and BV-WSP shall be constructed as specified in Sections R602.10.6.1 through R602.10.6.5.

R602.10.6.1 Method ABW: Alternate braced wall panels. Method ABW braced wall panels shall be constructed in accordance with Figure R602.10.6.1. The hold-down force shall be in accordance with Table R602.10.6.1.

R602.10.6.2 Method PFH: Portal frame with hold-downs. Method PFH braced wall panels shall be constructed in accordance with Figure R602.10.6.2.

R602.10.6.3 Method PFG: Portal frame at garage door openings in Seismic Design Categories A, B and C. Where supporting a roof or one story and a roof, a Method PFG braced wall panel constructed in accordance with Figure R602.10.6.3 shall be permitted on either side of garage door openings.

R602.10.6.4 Method CS-PF: Continuously sheathed portal frame. Continuously sheathed portal frame braced wall panels shall be constructed in accordance with Figure R602.10.6.4 and Table R602.10.6.4. The number of continuously sheathed portal frame panels in a single braced wall line shall not exceed four.

TABLE R602.10.5
MINIMUM LENGTH OF BRACED WALL PANELS

METHOD (See Table R602.10.4)		MINIMUM LENGTH[a] (Inches) Wall Height 8 feet	9 feet	10 feet	11 feet	12 feet	CONTRIBUTING LENGTH (Inches)
DWB, WSP, SFB, PBS, PCP, HPS, BV-WSP		48	48	48	53	58	Actual[b]
GB		48	48	48	53	58	Double sided = Actual Single sided = 0.5 × Actual
LIB		55	62	69	NP	NP	Actual[b]
ABW	SDC A, B and C, ultimate design wind speed < 140 mph	28	32	34	38	42	48
	SDC D_0, D_1 and D_2, ultimate design wind speed < 140 mph	32	32	34	NP	NP	
CS-G		24	27	30	33	36	Actual[b]
CS-WSP, CS-SFB	Adjacent clear opening height (inches)						
	≤ 64	24	27	30	33	36	Actual[b]
	68	26	27	30	33	36	
	72	27	27	30	33	36	
	76	30	29	30	33	36	
	80	32	30	30	33	36	
	84	35	32	32	33	36	
	88	38	35	33	33	36	
	92	43	37	35	35	36	
	96	48	41	38	36	36	
	100	—	44	40	38	38	
	104	—	49	43	40	39	
	108	—	54	46	43	41	
	112	—	—	50	45	43	
	116	—	—	55	48	45	
	120	—	—	60	52	48	
	124	—	—	—	56	51	
	128	—	—	—	61	54	
	132	—	—	—	66	58	
	136	—	—	—	—	62	
	140	—	—	—	—	66	
	144	—	—	—	—	72	
METHOD (See Table R602.10.4)		Portal header height 8 feet	9 feet	10 feet	11 feet	12 feet	
PFH	Supporting roof only	16	16	16	Note c	Note c	48
	Supporting one story and roof	24	24	24	Note c	Note c	
PFG		24	27	30	Note d	Note d	1.5 × Actual[b]
CS-PF	SDC A, B and C	16	18	20	Note e	Note e	1.5 × Actual[b]
	SDC D_0, D_1 and D_2	16	18	20	Note e	Note e	Actual[b]

For SI: 1 inch = 25.4 mm, 1 foot = 304.8 mm, 1 mile per hour = 0.447 m/s.
NP = Not Permitted.
a. Linear interpolation shall be permitted.
b. Use the actual length where it is greater than or equal to the minimum length.
c. Maximum header height for PFH is 10 feet in accordance with Figure R602.10.6.2, but wall height shall be permitted to be increased to 12 feet with pony wall.
d. Maximum header height for PFG is 10 feet in accordance with Figure R602.10.6.3, but wall height shall be permitted to be increased to 12 feet with pony wall.
e. Maximum header height for CS-PF is 10 feet in accordance with Figure R602.10.6.4, but wall height shall be permitted to be increased to 12 feet with pony wall.

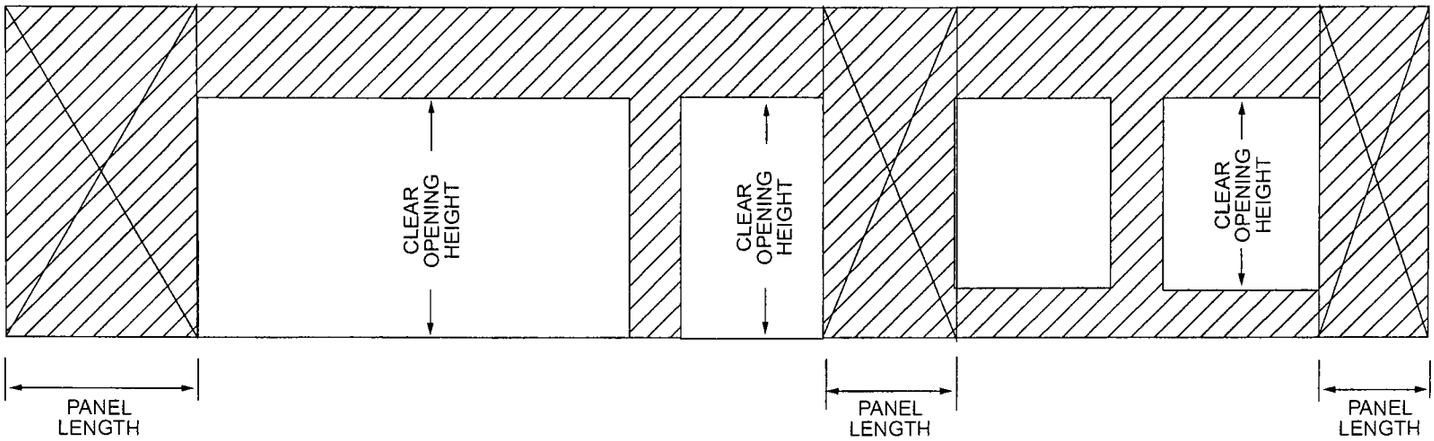

FIGURE R602.10.5
BRACED WALL PANELS WITH CONTINUOUS SHEATHING

TABLE R602.10.5.2
PARTIAL CREDIT FOR BRACED WALL PANELS LESS THAN 48 INCHES IN ACTUAL LENGTH

ACTUAL LENGTH OF BRACED WALL PANEL (inches)	CONTRIBUTING LENGTH OF BRACED WALL PANEL (inches)[a]	
	8-foot Wall Height	9-foot Wall Height
48	48	48
42	36	36
36	27	NA

For SI: 1 inch = 25.4 mm, 1 foot = 304.8 mm.
NA = Not Applicable.
a. Linear interpolation shall be permitted.

TABLE R602.10.6.1
MINIMUM HOLD-DOWN FORCES FOR METHOD ABW BRACED WALL PANELS

SEISMIC DESIGN CATEGORY AND WIND SPEED	SUPPORTING/STORY	HOLD-DOWN FORCE (pounds)				
		Height of Braced Wall Panel				
		8 feet	9 feet	10 feet	11 feet	12 feet
SDC A, B and C Ultimate design wind speed < 140 mph	One story	1,800	1,800	1,800	2,000	2,200
	First of two stories	3,000	3,000	3,000	3,300	3,600
SDC D_0, D_1 and D_2 Ultimate design wind speed <140 mph	One story	1,800	1,800	1,800	NP	NP
	First of two stories	3,000	3,000	3,000	NP	NP

For SI: 1 inch = 25.4 mm, 1 foot = 304.8 mm, 1 pound = 4.45 N, 1 mile per hour = 0.447 m/s.
NP = Not Permitted.

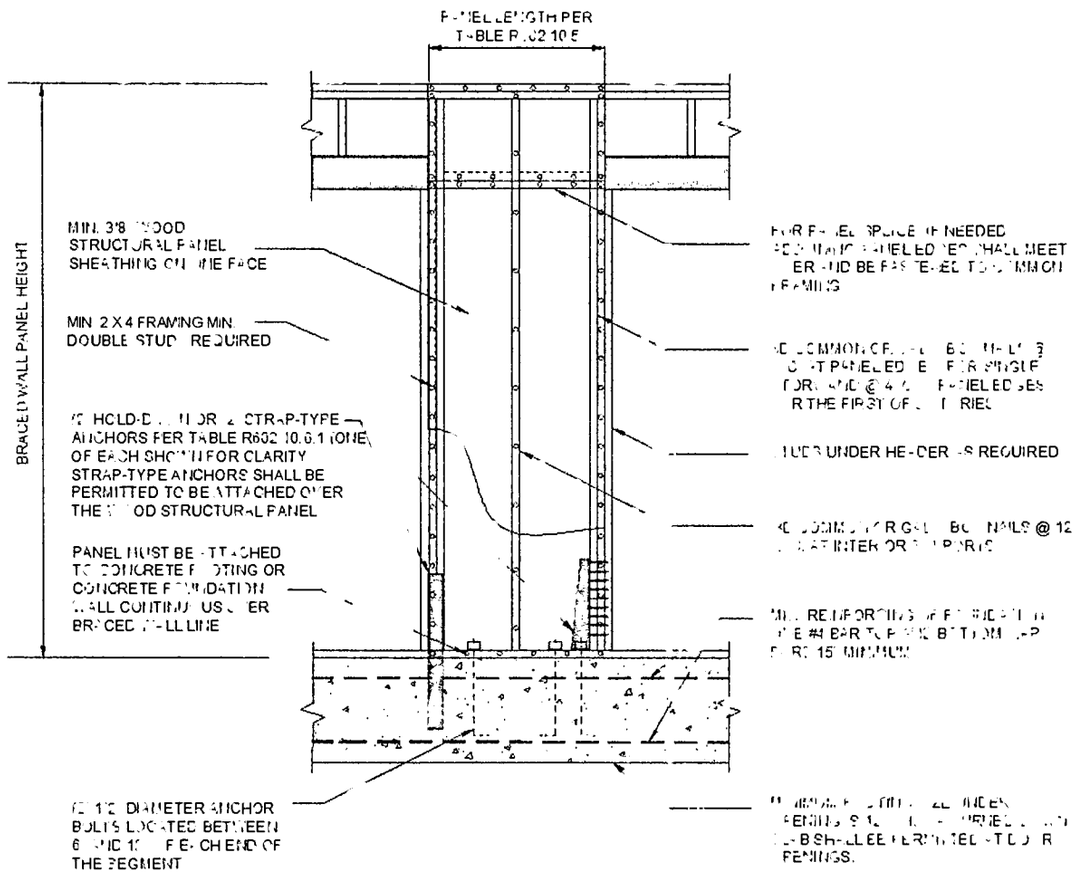

For SI: 1 inch = 25.4 mm.

FIGURE R602.10.6.1
METHOD ABW—ALTERNATE BRACED WALL PANEL

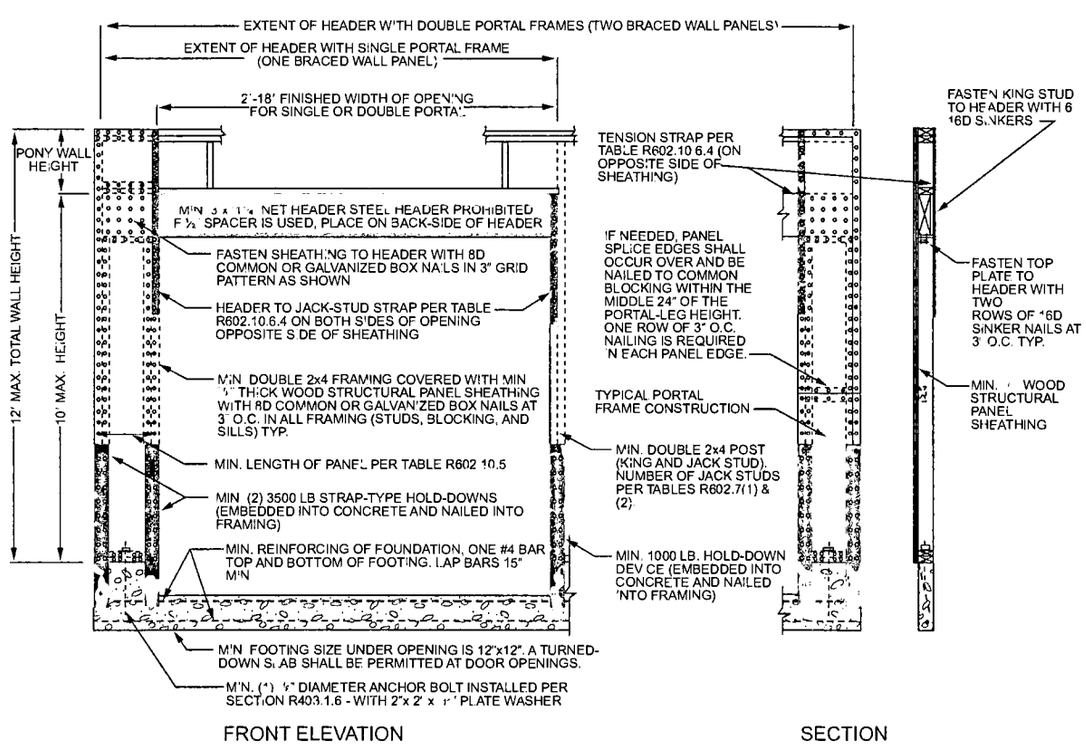

For SI: 1 inch = 25.4 mm, 1 foot = 304.8 mm.

FIGURE R602.10.6.2
METHOD PFH—PORTAL FRAME WITH HOLD-DOWNS

R602.10.6.5 Wall bracing for dwellings with stone and masonry veneer in Seismic Design Categories D_0, D_1 and D_2. Where stone and masonry veneer are installed in accordance with Section R703.8, wall bracing on exterior braced wall lines and braced wall lines on the interior of the building, backing or perpendicular to and laterally supporting veneered walls shall comply with this section.

Where dwellings in Seismic Design Categories D_0, D_1 and D_2 have stone or masonry veneer installed in accordance with Section R703.8, and the veneer does not exceed the first-story height, wall bracing shall be in accordance with Section R602.10.3.

Where detached one- or two-family dwellings in Seismic Design Categories D_0, D_1 and D_2 have stone or masonry veneer installed in accordance with Section R703.8, and the veneer exceeds the first-story height, wall bracing at exterior braced wall lines and braced wall lines on the interior of the building shall be constructed using Method BV-WSP in accordance with this section and Figure R602.10.6.5. Cripple walls shall not be permitted, and required interior braced wall lines shall be supported on continuous foundations.

Where detached one- or two-family dwellings in Seismic Design Categories D_0, D_1 and D_2 have exterior veneer installed in accordance with Section R703.8 and are braced in accordance with Method WSP or CS-WSP, veneer shall be permitted in the second story in accordance with Item 1 or 2, provided that the dwelling does not extend more than two stories above grade plane, the veneer does not exceed 5 inches (127 mm) in thickness, the height of veneer on gable-end walls does not extend more than 8 feet (2438 mm) above the bearing wall top plate elevation, and the total length of braced wall panel specified by Table R602.10.3(3) is multiplied by 1.2 for each first- and second-story braced wall line.

1. The total area of the veneer on the second-story exterior walls shall be permitted to extend up to 25 percent of the occupied second floor area.
2. The veneer on the second-story exterior walls shall be permitted to cover one side of the dwelling, including walls on bay windows and similar appurtenances within the one dwelling side.

Townhouses in Seismic Design Categories D_0, D_1 and D_2 with stone or masonry veneer exceeding the first-story height shall be designed in accordance with accepted engineering practice.

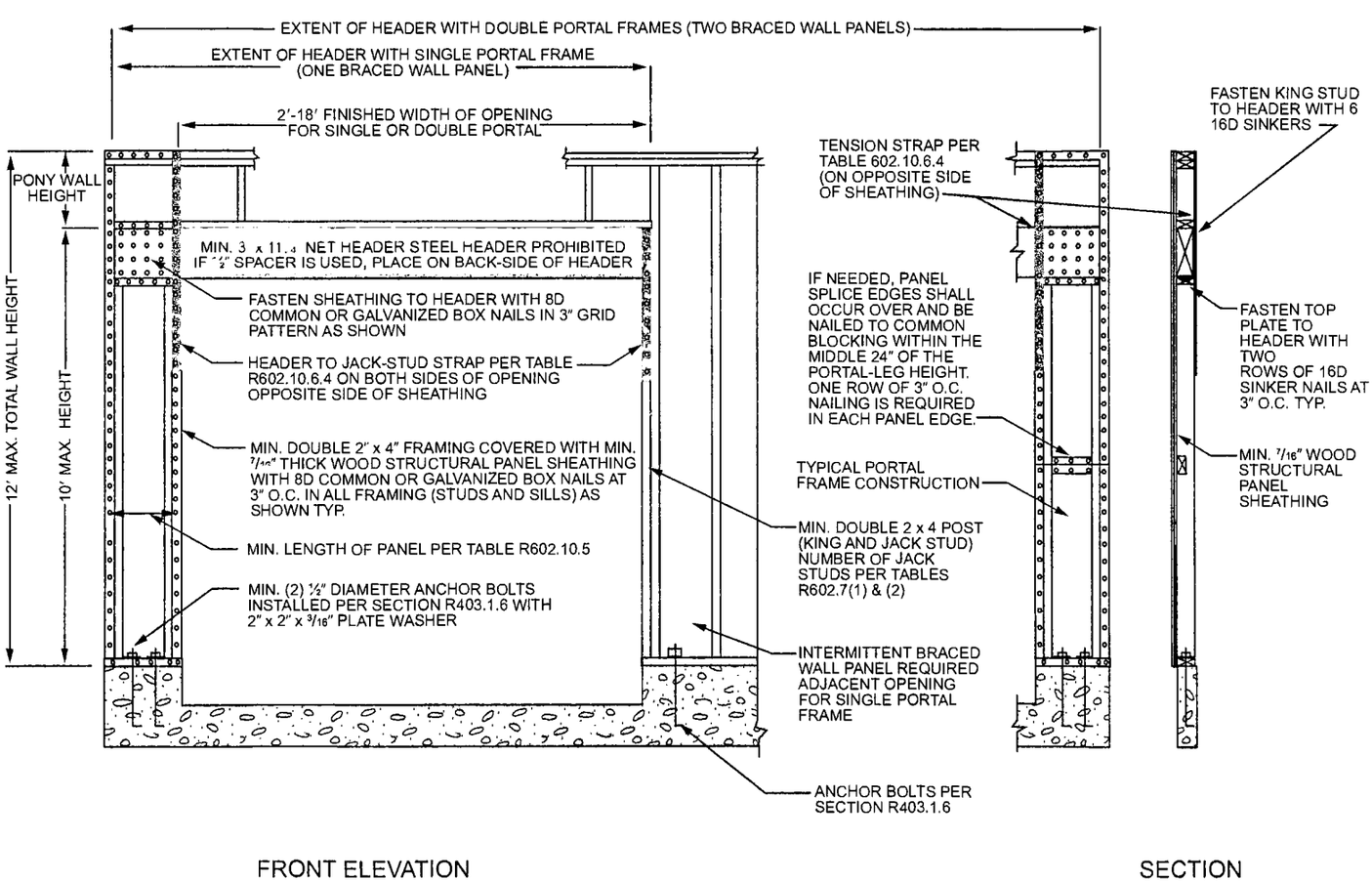

For SI: 1 inch = 25.4 mm, 1 foot = 304.8 mm.

FIGURE R602.10.6.3
METHOD PFG—PORTAL FRAME AT GARAGE DOOR OPENINGS IN SEISMIC DESIGN CATEGORIES A, B AND C

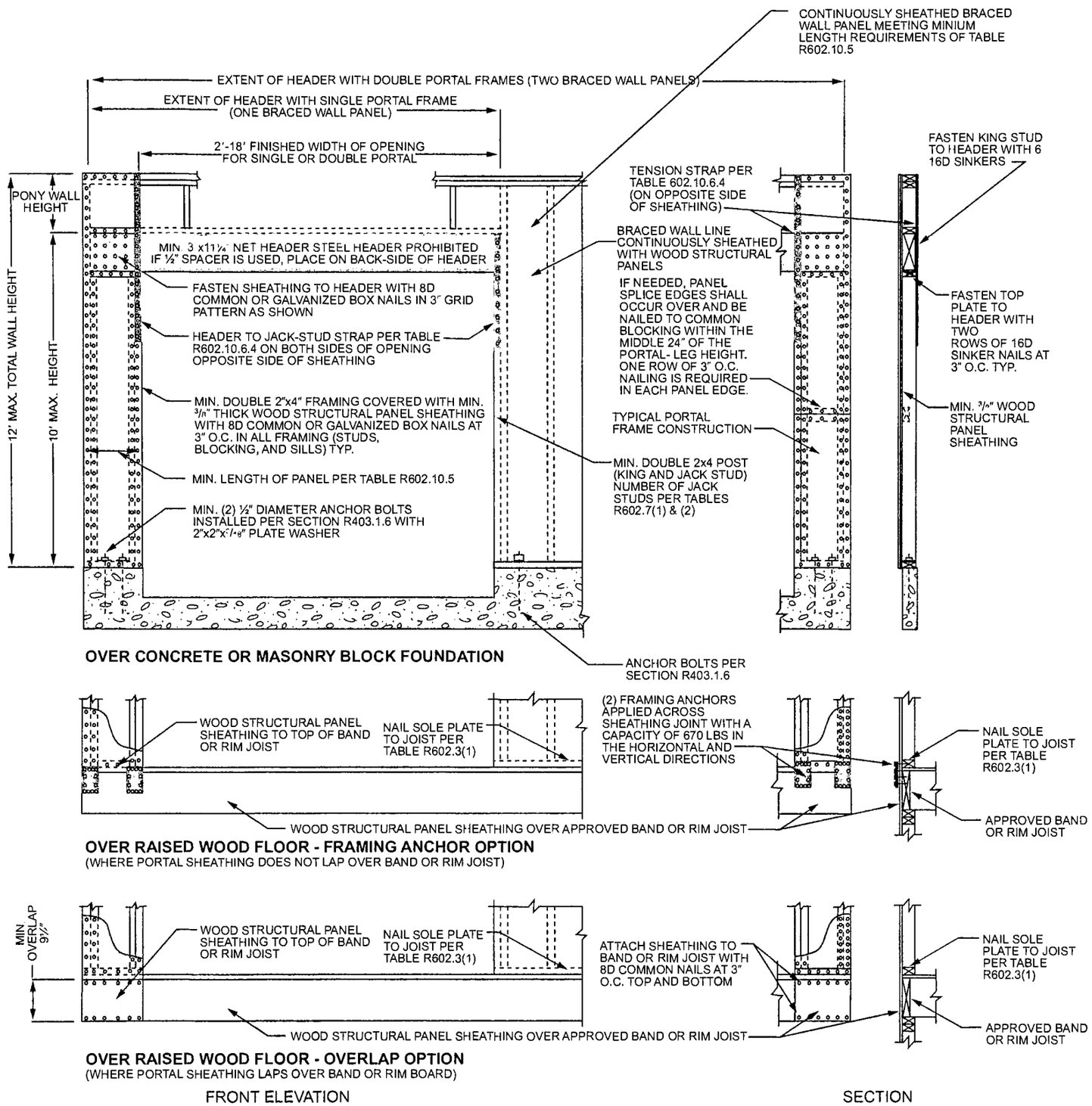

For SI: 1 inch = 25.4 mm, 1 foot = 304.8 mm.

FIGURE R602.10.6.4
METHOD CS-PF—CONTINUOUSLY SHEATHED PORTAL FRAME PANEL CONSTRUCTION

TABLE R602.10.6.4
TENSION STRAP CAPACITY FOR RESISTING WIND PRESSURES PERPENDICULAR TO METHODS PFH, PFG AND CS-PF BRACED WALL PANELS[a]

MINIMUM WALL STUD FRAMING NOMINAL SIZE AND GRADE	MAXIMUM PONY WALL HEIGHT (feet)	MAXIMUM TOTAL WALL HEIGHT (feet)	MAXIMUM OPENING WIDTH (feet)	TENSION STRAP CAPACITY REQUIRED (pounds)[a]					
				Ultimate Design Wind Speed V_{ult} (mph)					
				110	115	130	110	115	130
				Exposure B			Exposure C		
2 × 4 No. 2 Grade	0	10	18	1,000	1,000	1,000	1,000	1,000	1,050
	1	10	9	1,000	1,000	1,000	1,000	1,000	1,750
			16	1,000	1,025	2,050	2,075	2,500	3,950
			18	1,000	1,275	2,375	2,400	2,850	DR
	2	10	9	1,000	1,000	1,475	1,500	1,875	3,125
			16	1,775	2,175	3,525	3,550	4,125	DR
			18	2,075	2,500	3,950	3,975	DR	DR
	2	12	9	1,150	1,500	2,650	2,675	3,175	DR
			16	2,875	3,375	DR	DR	DR	DR
			18	3,425	3,975	DR	DR	DR	DR
	4	12	9	2,275	2,750	DR	DR	DR	DR
			12	3,225	3,775	DR	DR	DR	DR
2 × 6 Stud Grade	2	12	9	1,000	1,000	1,700	1,700	2,025	3,050
			16	1,825	2,150	3,225	3,225	3,675	DR
			18	2,200	2,550	3,725	3,750	DR	DR
	4	12	9	1,450	1,750	2,700	2,725	3,125	DR
			16	2,050	2,400	DR	DR	DR	DR
			18	3,350	3,800	DR	DR	DR	DR

For SI: 1 inch = 25.4 mm, 1 foot = 304.8 mm, 1 mile per hour = 0.447 m/s.
DR = Design Required.
a. Straps shall be installed in accordance with manufacturer's recommendations.

TABLE R602.10.6.5
METHOD BV-WSP WALL BRACING REQUIREMENTS

SEISMIC DESIGN CATEGORY	STORY	BRACED WALL LINE LENGTH (FEET)					SINGLE-STORY HOLD-DOWN FORCE (pounds)[a]	CUMULATIVE HOLD-DOWN FORCE (pounds)[b]
		10	20	30	40	50		
		Minimum Total Length (feet) of Braced Wall Panels Required Along each Braced Wall Line						
D_0		4.0	7.0	10.5	14.0	17.5	NA	—
	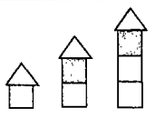	4.0	7.0	10.5	14.0	17.5	1900	—
	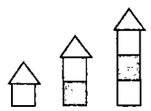	4.5	9.0	13.5	18.0	22.5	3500	5400
	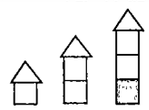	6.0	12.0	18.0	24.0	30.0	3500	8900
D_1	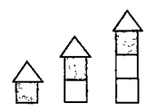	4.5	9.0	13.5	18.0	22.5	2100	—
	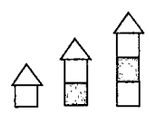	4.5	9.0	13.5	18.0	22.5	3700	5800
	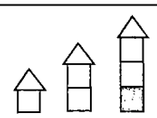	6.0	12.0	18.0	24.0	30.0	3700	9500
D_2	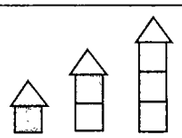	5.5	11.0	16.5	22.0	27.5	2300	—
	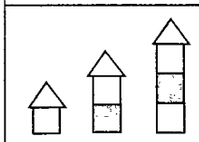	5.5	11.0	16.5	22.0	27.5	3900	6200
	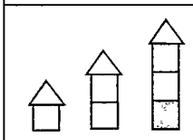	NP	NP	NP	NP	NP	NA	NA

For SI: 1 inch = 25.4 mm, 1 foot = 304.8 mm, 1 pound per square foot = 0.479 kPa, 1 pound-force = 4.448 N.

NP = Not Permitted.

NA = Not Applicable.

a. Hold-down force is minimum allowable stress design load for connector providing uplift tie from wall framing at end of braced wall panel at the noted story to wall framing at end of braced wall panel at the story below, or to foundation or foundation wall. Use single-story hold-down force where edges of braced wall panels do not align; a continuous load path to the foundation shall be maintained.

b. Where hold-down connectors from stories above align with stories below, use cumulative hold-down force to size middle- and bottom-story hold-down connectors.

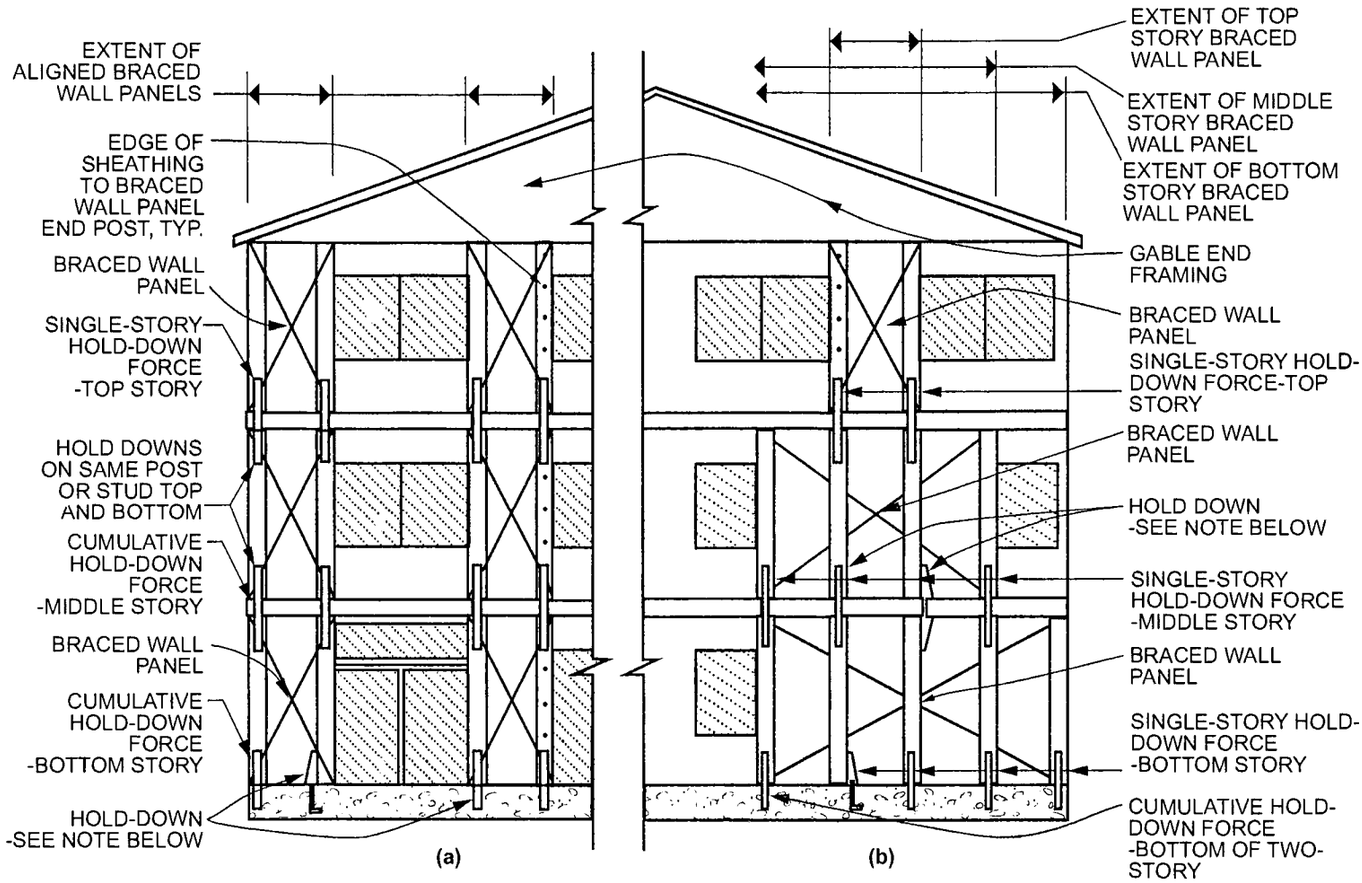

(a) Braced wall panels stacked (aligned story to story). Use cumulative hold-down force.

(b) Braced wall panels mixed stacked and not stacked. Use hold-down force as noted.

Note: Hold downs should be strap ties, tension ties, or other approved hold-down devices and shall be installed in accordance with the manufacturer's Instructions.

FIGURE R602.10.6.5
METHOD BV-WSP—WALL BRACING FOR DWELLINGS WITH STONE AND MASONRY VENEER IN SEISMIC DESIGN CATEGORIES D_0, D_1 and D_2

R602.10.6.5.1 Length of bracing. The length of bracing along each braced wall line shall be the greater of that required by the ultimate design wind speed and braced wall line spacing in accordance with Table R602.10.3(1) as adjusted by the factors in Table R602.10.3(2) or the seismic design category and braced wall line length in accordance with Table R602.10.6.5. Angled walls shall be permitted to be counted in accordance with Section R602.10.1.4, and braced wall panel location shall be in accordance with Section R602.10.2.2. Spacing between braced wall lines shall be in accordance with Table R602.10.1.3. The seismic adjustment factors in Table R602.10.3(4) shall not be applied to the length of bracing determined using Table R602.10.6.5, except that the bracing amount increase for braced wall line spacing greater than 25 feet (7620 mm) in accordance with Table R602.10.1.3 shall be required. The minimum total length of bracing in a braced wall line, after all adjustments have been taken, shall be not less than 48 inches (1219 mm) total.

R602.10.7 Ends of braced wall lines with continuous sheathing. Each end of a braced wall line with continuous sheathing shall have one of the conditions shown in Figure R602.10.7.

R602.10.8 Braced wall panel connections. Braced wall panels shall be connected to floor framing or foundations as follows:

1. Where joists are perpendicular to a braced wall panel above or below, a rim joist, band joist or blocking shall be provided along the entire length of the braced wall panel in accordance with Figure R602.10.8(1). Fastening of top and bottom wall plates to framing, rim joist, band joist or blocking shall be in accordance with Table R602.3(1).
2. Where joists are parallel to a braced wall panel above or below, a rim joist, end joist or other parallel framing member shall be provided directly above and below the braced wall panel in accordance with Figure R602.10.8(2). Where a parallel framing member cannot be located directly above and below

the panel, full-depth blocking at 16-inch (406 mm) spacing shall be provided between the parallel framing members to each side of the braced wall panel in accordance with Figure R602.10.8(2). Fastening of blocking and wall plates shall be in accordance with Table R602.3(1) and Figure R602.10.8(2).

3. Connections of braced wall panels to concrete or masonry shall be in accordance with Section R403.1.6.

R602.10.8.1 Braced wall panel connections for Seismic Design Categories D_0, D_1 and D_2. Braced wall panels shall be fastened to required foundations in accordance with Section R602.11.1, and top plate lap splices shall be face-nailed with not less than eight 16d nails on each side of the splice.

R602.10.8.2 Connections to roof framing. Top plates of exterior braced wall panels shall be attached to rafters or roof trusses above in accordance with Table R602.3(1) and this section. Where required by this section, blocking between rafters or roof trusses shall be attached to top plates of braced wall panels and to rafters and roof trusses in accordance with Table R602.3(1). A continuous band, rim or header joist or roof truss parallel to the braced wall panels shall be permitted to replace the blocking required by this section. Blocking shall not be required over openings in continuously sheathed braced wall lines. In addition to the

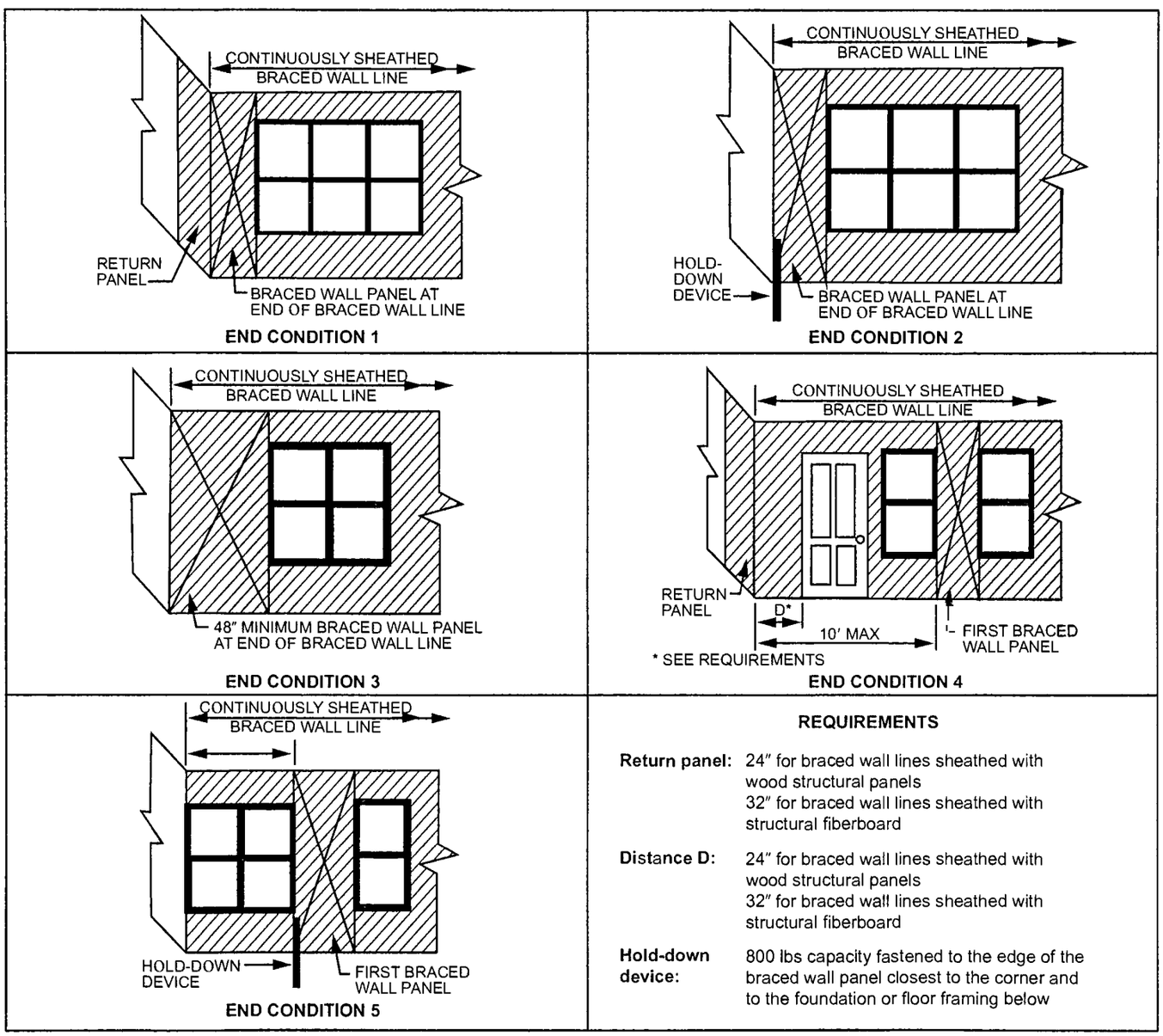

For SI: 1 inch = 25.4 mm, 1 foot = 304.8 mm, 1 pound = 4.45 N.

FIGURE R602.10.7
END CONDITIONS FOR BRACED WALL LINES WITH CONTINUOUS SHEATHING

requirements of this section, lateral support shall be provided for rafters and ceiling joists in accordance with Section R802.8 and for trusses in accordance with Section R802.10.3. Roof ventilation shall be provided in accordance with Section R806.1.

1. For Seismic Design Categories A, B and C where the distance from the top of the braced wall panel to the top of the rafters or roof trusses above is $9^1/_4$ inches (235 mm) or less, blocking between rafters or roof trusses shall not be required. Where the distance from the top of the braced wall panel to the top of the rafters or roof trusses above is between $9^1/_4$ inches (235 mm) and $15^1/_4$ inches (387 mm), blocking between rafters or roof trusses shall be provided above the braced wall panel in accordance with Figure R602.10.8.2(1).

   Exception: Where the outside edge of truss vertical web members aligns with the outside face of the wall studs below, wood structural panel sheathing extending above the top plate as shown in Figure R602.10.8.2(3) shall be permitted to be fastened to each truss web with three-8d nails ($2^1/_2$ inches × 0.131 inch) and blocking between the trusses shall not be required.

2. For Seismic Design Categories D_0, D_1 and D_2, where the distance from the top of the braced wall panel to the top of the rafters or roof trusses is $15^1/_4$ inches (387 mm) or less, blocking between rafters or roof trusses shall be provided above the braced wall panel in accordance with Figure R602.10.8.2(1).

3. Where the distance from the top of the braced wall panel to the top of rafters or roof trusses exceeds $15^1/_4$ inches (387 mm), the top plates of the braced wall panel shall be connected to perpendicular rafters or roof trusses above in accordance with one or more of the following methods:

   3.1. Soffit blocking panels constructed in accordance with Figure R602.10.8.2(2).

   3.2. Vertical blocking panels constructed in accordance with Figure R602.10.8.2(3).

   3.3. Blocking panels provided by the roof truss manufacturer and designed in accordance with Section R802.

   3.4. Blocking, blocking panels or other methods of lateral load transfer designed in accordance with the AWC WFCM or accepted engineering practice.

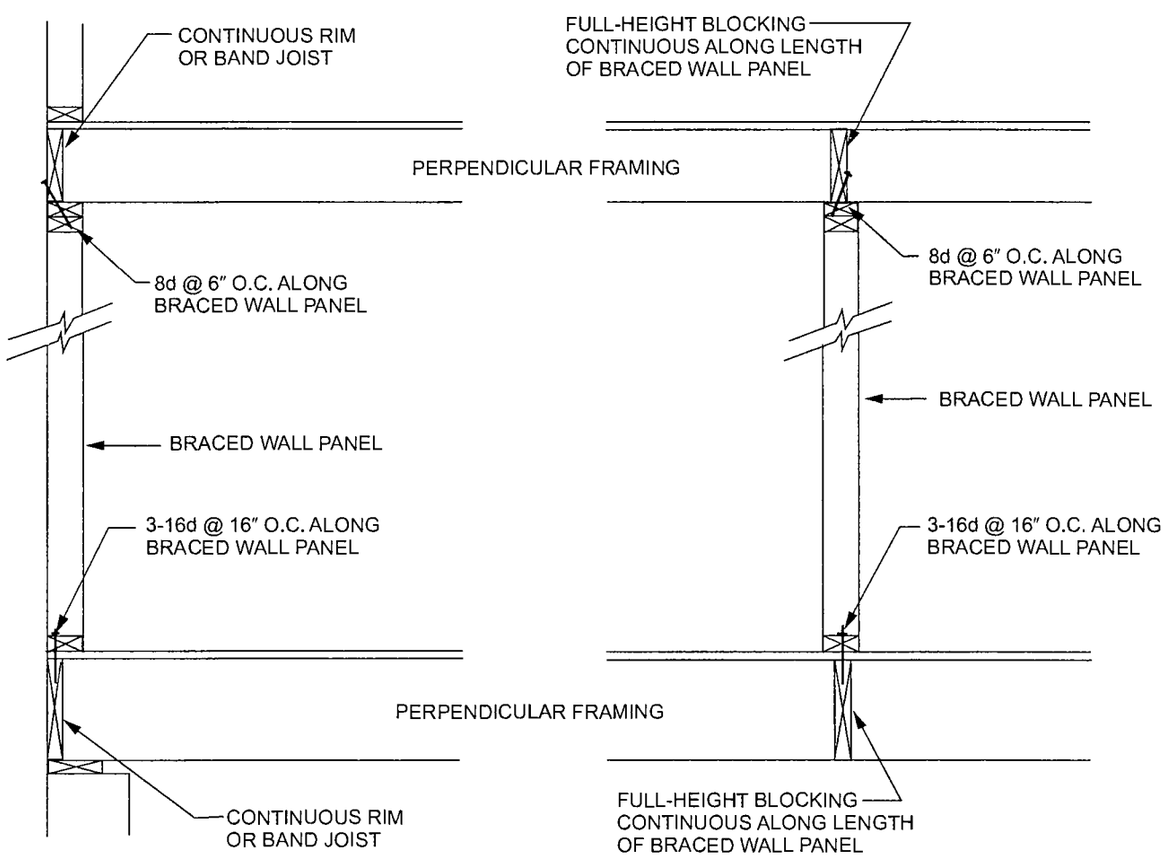

For SI: 1 inch = 25.4 mm.

FIGURE R602.10.8(1)
BRACED WALL PANEL CONNECTION WHEN PERPENDICULAR TO FLOOR/CEILING FRAMING

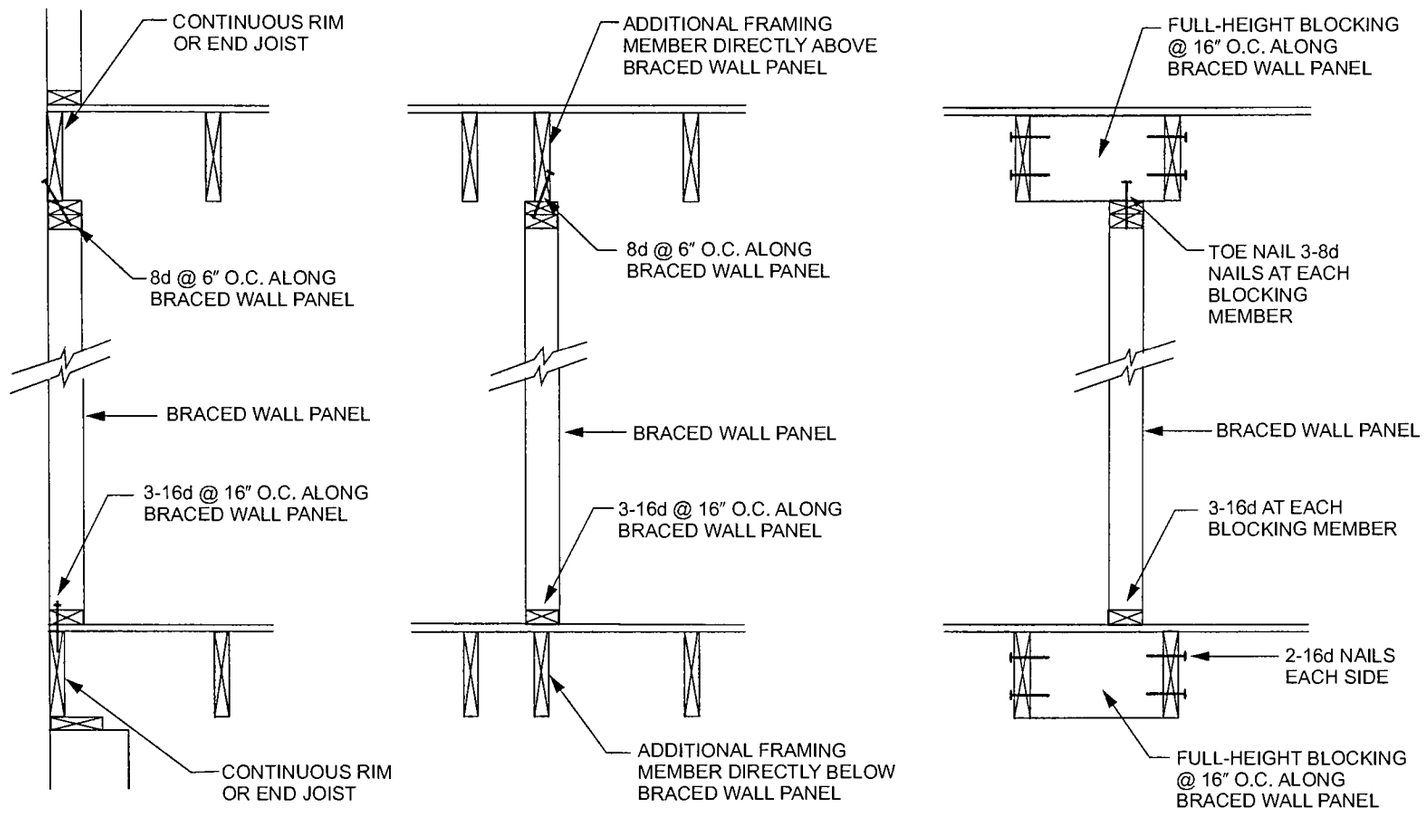

For SI: 1 inch = 25.4 mm.

FIGURE R602.10.8(2)
BRACED WALL PANEL CONNECTION WHEN PARALLEL TO FLOOR/CEILING FRAMING

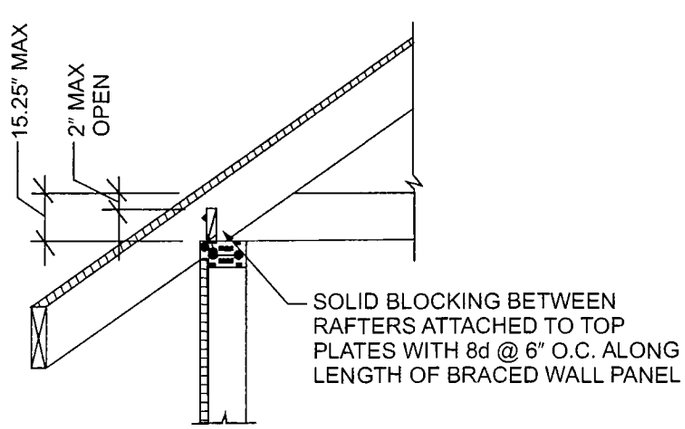

For SI: 1 inch = 25.4 mm.

FIGURE R602.10.8.2(1)
BRACED WALL PANEL CONNECTION TO PERPENDICULAR RAFTERS

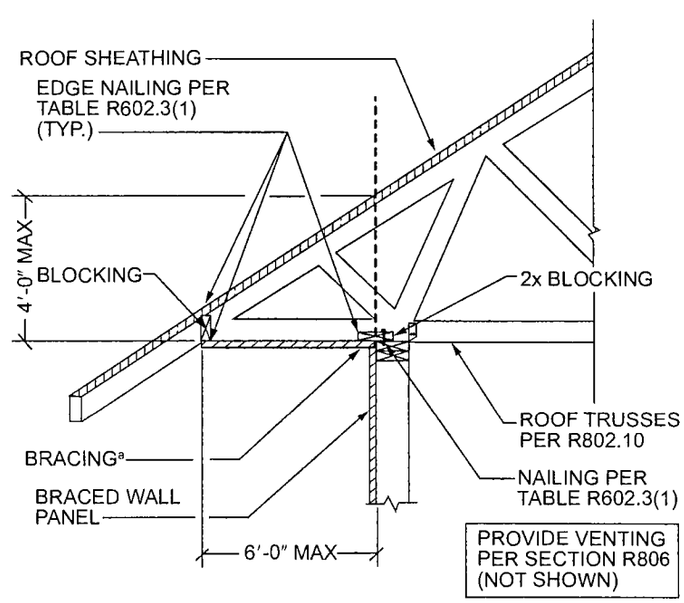

For SI: 1 inch = 25.4 mm, 1 foot = 304.8 mm.
a. Methods of bracing shall be as described in Section R602.10.4.

FIGURE R602.10.8.2(2)
BRACED WALL PANEL CONNECTION OPTION TO PERPENDICULAR RAFTERS OR ROOF TRUSSES

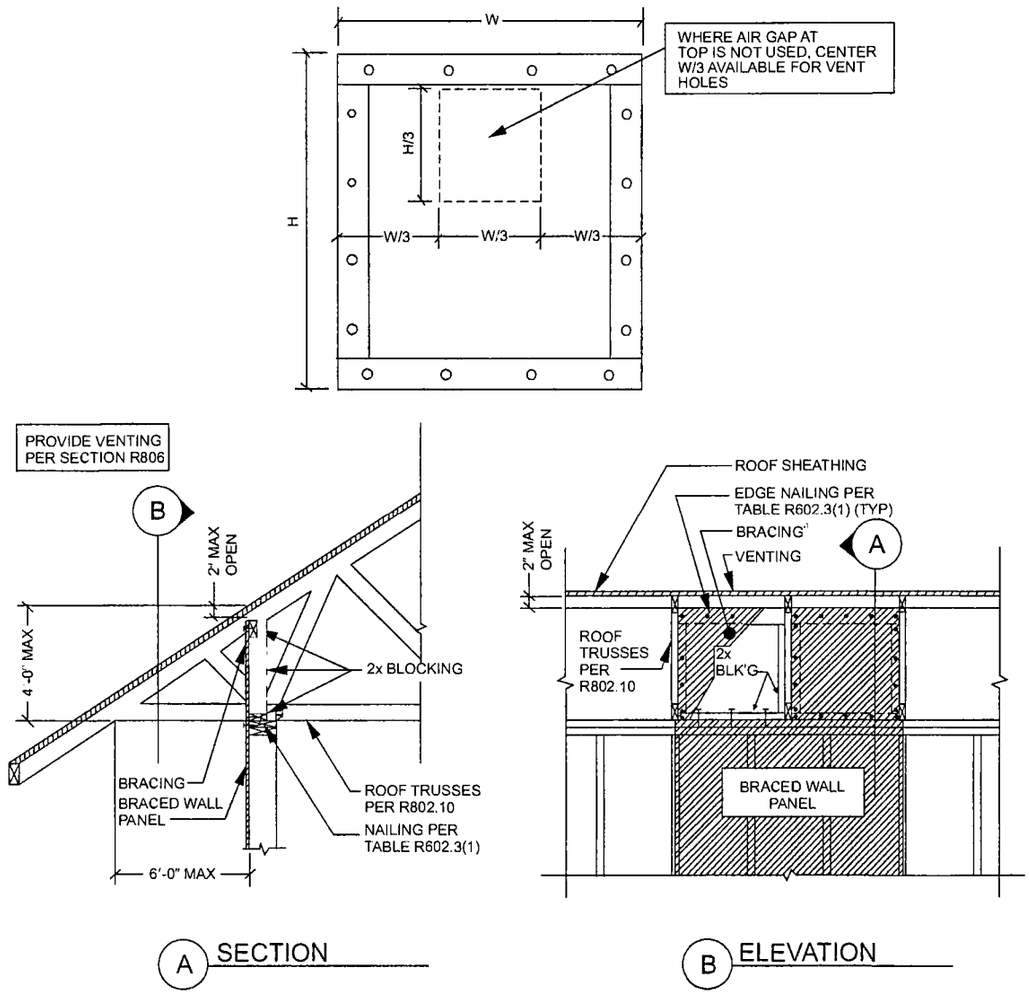

For SI: 1 inch = 25.4 mm, 1 foot =304.8 mm

a. Methods of bracing shall be as described in Section R602.10.4.

FIGURE R602.10.8.2(3)
BRACED WALL PANEL CONNECTION OPTION TO PERPENDICULAR RAFTERS OR ROOF TRUSSES

R602.10.9 Braced wall panel support. Braced wall panel support shall be provided as follows:

1. Cantilevered floor joists complying with Section R502.3.3 shall be permitted to support braced wall panels.
2. Raised floor system post or pier foundations supporting braced wall panels shall be designed in accordance with accepted engineering practice.
3. Masonry stem walls with a length of 48 inches (1219 mm) or less supporting braced wall panels shall be reinforced in accordance with Figure R602.10.9. Masonry stem walls with a length greater than 48 inches (1219 mm) supporting braced wall panels shall be constructed in accordance with Section R403.1 Methods ABW and PFH shall not be permitted to attach to masonry stem walls.
4. Concrete stem walls with a length of 48 inches (1219 mm) or less, greater than 12 inches (305 mm) tall and less than 6 inches (152 mm) thick shall have reinforcement sized and located in accordance with Figure R602.10.9.

R602.10.9.1 Braced wall panel support for Seismic Design Categories D_0, D_1 and D_2. In Seismic Design Categories D_0, D_1 and D_2, braced wall panel footings shall be as specified in Section R403.1.2.

R602.10.10 Cripple wall bracing. Cripple walls shall be constructed in accordance with Section R602.9 and braced in accordance with this section. Cripple walls shall be braced with the length and method of bracing used for the wall above in accordance with Tables R602.10.3(1) and R602.10.3(3), and the applicable adjustment factors in Table R602.10.3(2) or R602.10.3(4), respectively, except that the length of cripple wall bracing shall be multiplied by a factor of 1.15. Where gypsum wall board is not used on the inside of the cripple wall bracing, the length adjustments for the elimination of the gypsum wallboard, or equivalent, shall be applied as directed in Tables R602.10.3(2) and R602.10.3(4) to the length of cripple wall bracing required. This adjustment shall be taken in addition to the 1.15 increase.

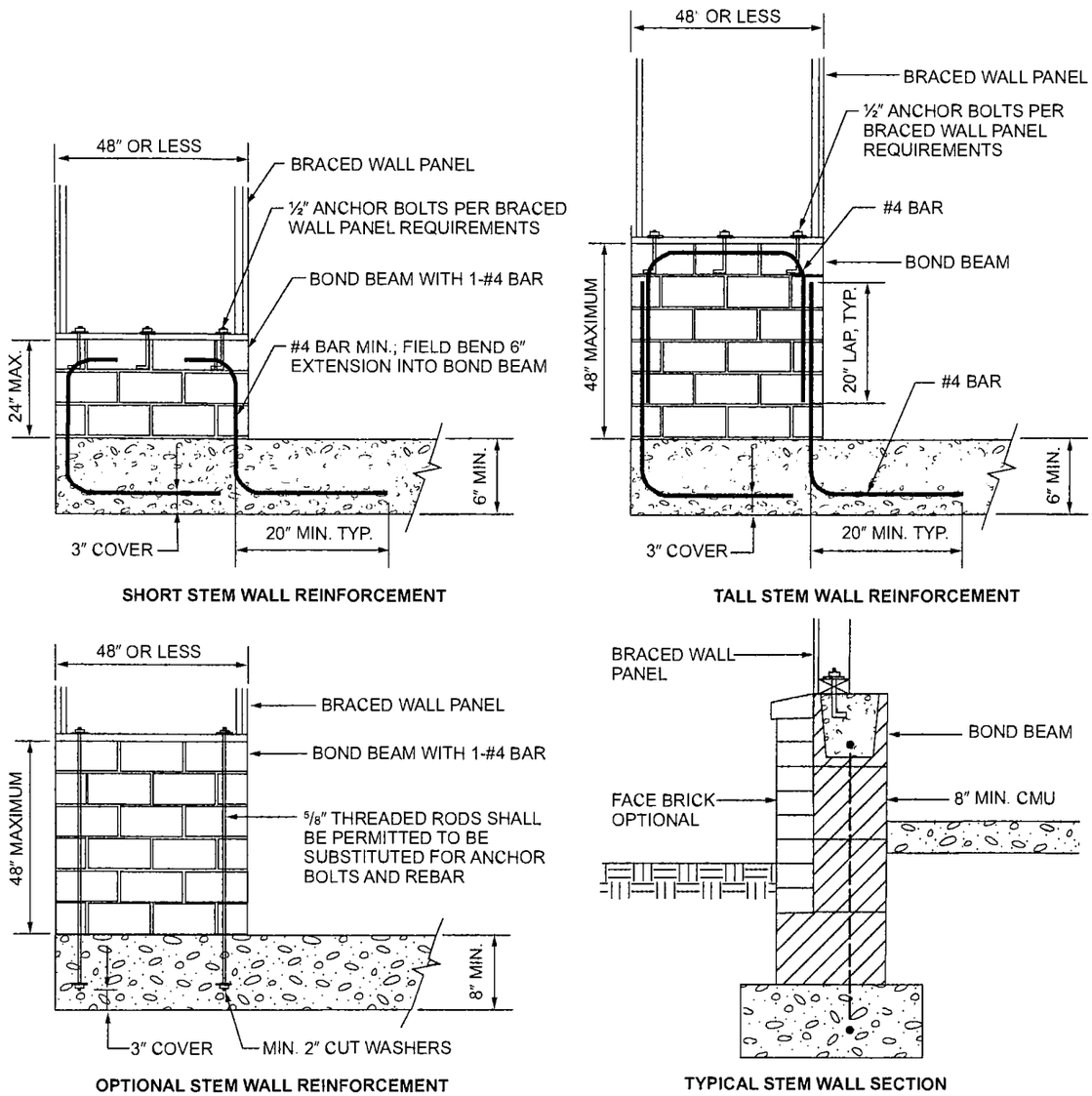

For SI: 1 inch = 25.4 mm.

FIGURE R602.10.9
MASONRY STEM WALLS SUPPORTING BRACED WALL PANELS

R602.10.10.1 Cripple wall bracing for Seismic Design Categories D_0 and D_1 and townhouses in Seismic Design Category C. In addition to the requirements in Section R602.10.10, the distance between adjacent edges of braced wall panels for cripple walls along a braced wall line shall be 14 feet (4267 mm) maximum.

Where braced wall lines at interior walls are not supported on a continuous foundation below, the adjacent parallel cripple walls, where provided, shall be braced with Method WSP or Method CS-WSP in accordance with Section R602.10.4. The length of bracing required in accordance with Table R602.10.3(3) for the cripple walls shall be multiplied by 1.5. Where the cripple walls do not have sufficient length to provide the required bracing, the spacing of panel edge fasteners shall be reduced to 4 inches (102 mm) on center and the required bracing length adjusted by 0.7. If the required length can still not be provided, the cripple wall shall be designed in accordance with accepted enginecring practice.

R602.10.10.2 Cripple wall bracing for Seismic Design Category D_2. In Seismic Design Category D_2, cripple walls shall be braced in accordance with Tables R602.10.3(3) and R602.10.3(4).

R602.10.10.3 Redesignation of cripple walls. Where all cripple wall segments along a braced wall line do not exceed 48 inches (1219 mm) in height, the cripple walls shall be permitted to be redesignated as a first-story wall for purposes of determining wall bracing requirements. Where any cripple wall segment in a braced wall line exceeds 48 inches (1219 mm) in height, the entire cripple wall shall be counted as an

additional story. If the cripple walls are redesignated, the stories above the redesignated story shall be counted as the second and third stories, respectively.

R602.11 Wall anchorage. Braced wall line sills shall be anchored to concrete or masonry foundations in accordance with Sections R403.1.6 and R602.11.1.

R602.11.1 Wall anchorage for all buildings in Seismic Design Categories D_0, D_1 and D_2 and townhouses in Seismic Design Category C. Plate washers, not less than 0.229 inch by 3 inches by 3 inches (5.8 mm by 76 mm by 76 mm) in size, shall be provided between the foundation sill plate and the nut except where approved anchor straps are used. The hole in the plate washer is permitted to be diagonally slotted with a width of up to $^3/_{16}$ inch (5 mm) larger than the bolt diameter and a slot length not to exceed $1^3/_4$ inches (44 mm), provided a standard cut washer is placed between the plate washer and the nut.

R602.11.2 Stepped foundations in Seismic Design Categories D_0, D_1 and D_2. In all buildings located in Seismic Design Categories D_0, D_1 or D_2, where the height of a required braced wall line that extends from foundation to floor above varies more than 4 feet (1219 mm), the braced wall line shall be constructed in accordance with the following:

1. Where the lowest floor framing rests directly on a sill bolted to a foundation not less than 8 feet (2440 mm) in length along a line of bracing, the line shall be considered as braced. The double plate of the cripple stud wall beyond the segment of footing that extends to the lowest framed floor shall be spliced by extending the upper top plate not less than 4 feet (1219 mm) along the foundation. Anchor bolts shall be located not more than 1 foot and 3 feet (305 and 914 mm) from the step in the foundation. See Figure R602.11.2.
2. Where cripple walls occur between the top of the foundation and the lowest floor framing, the bracing requirements of Sections R602.10.10, R602.10.10.1 and R602.10.10.2 shall apply.
3. Where only the bottom of the foundation is stepped and the lowest floor framing rests directly on a sill bolted to the foundations, the requirements of Sections R403.1.6 and R602.11.1 shall apply.

R602.12 Simplified wall bracing. Buildings meeting all of the following conditions shall be permitted to be braced in accordance with this section as an alternative to the requirements of Section R602.10. The entire building shall be braced in accordance with this section; the use of other bracing provisions of Section R602.10, except as specified herein, shall not be permitted.

1. There shall be not more than three stories above the top of a concrete or masonry foundation or basement wall. Permanent wood foundations shall not be permitted.
2. Floors shall not cantilever more than 24 inches (607 mm) beyond the foundation or bearing wall below.
3. Wall height shall not be greater than 10 feet (3048 mm).
4. The building shall have a roof eave-to-ridge height of 15 feet (4572 mm) or less.
5. Exterior walls shall have gypsum board with a minimum thickness of $^1/_2$ inch (12.7 mm) installed on the interior side fastened in accordance with Table R702.3.5.

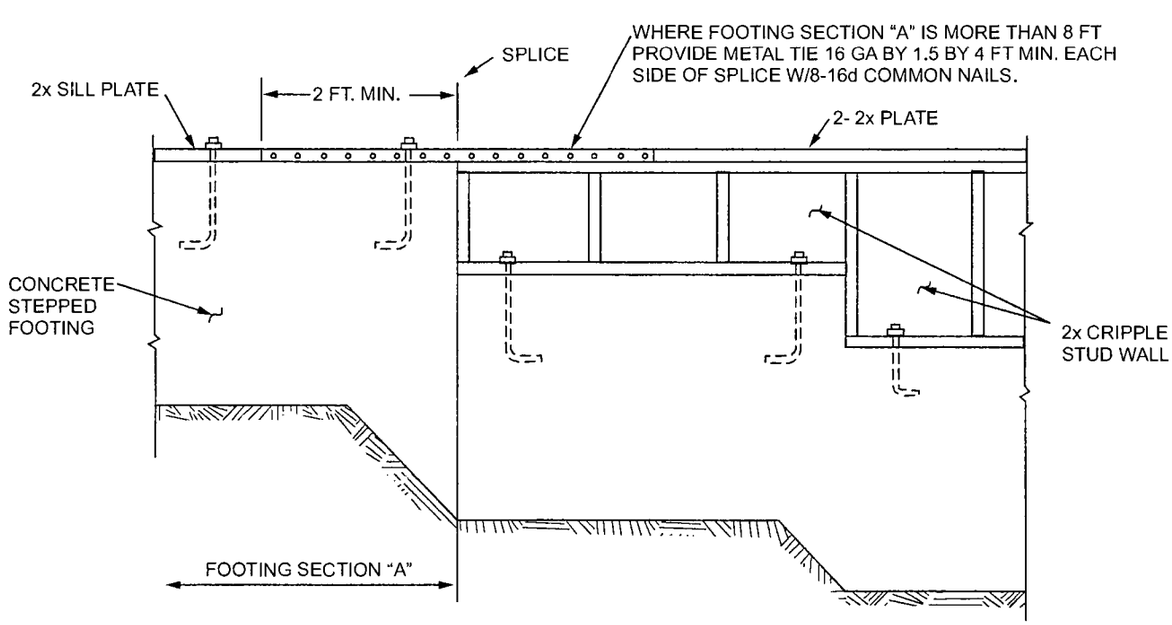

For SI. 1 inch = 25.4 mm, 1 foot = 304.8 mm.
Note: Where footing Section "A" is less than 8 feet long in a 25-foot-long wall, install bracing at cripple stud wall.

FIGURE R602.11.2
STEPPED FOUNDATION CONSTRUCTION

6. The structure shall be located where the ultimate design wind speed is less than or equal to 130 mph (58 m/s), and the exposure category is B or C.
7. The structure shall be located in Seismic Design Category A, B or C for detached one- and two-family dwellings or Seismic Design Category A or B for townhouses.
8. Cripple walls shall not be permitted in three-story buildings.

R602.12.1 Circumscribed rectangle. The bracing required for each building shall be determined by circumscribing a rectangle around the entire building on each floor as shown in Figure R602.12.1. The rectangle shall surround all enclosed offsets and projections such as sunrooms and attached garages. Open structures, such as carports and decks, shall be permitted to be excluded. The rectangle shall not have a side greater than 60 feet (18 288 mm), and the ratio between the long side and short side shall be not greater than 3:1.

R602.12.2 Sheathing materials. The following sheathing materials installed on the exterior side of exterior walls shall be used to construct a bracing unit as defined in Section R602.12.3. Mixing materials is prohibited.

1. Wood structural panels with a minimum thickness of $^3/_8$ inch (9.5 mm) fastened in accordance with Table R602.3(3).
2. Structural fiberboard sheathing with a minimum thickness of $^1/_2$ inch (12.7 mm) fastened in accordance with Table R602.3(1).

R602.12.3 Bracing unit. A bracing unit shall be a full-height sheathed segment of the exterior wall without openings or vertical or horizontal offsets and a minimum length as specified herein. Interior walls shall not contribute toward the amount of required bracing. Mixing of Items 1 and 2 is prohibited on the same story.

1. Where all framed portions of all exterior walls are sheathed in accordance with Section R602.12.2, including wall areas between bracing units, above and below openings and on gable end walls, the minimum length of a bracing unit shall be 3 feet (914 mm).
2. Where the exterior walls are braced with sheathing panels in accordance with Section R602.12.2 and areas between bracing units are covered with other materials, the minimum length of a bracing unit shall be 4 feet (1219 mm).

R602.12.3.1 Multiple bracing units. Segments of wall compliant with Section R602.12.3 and longer than the minimum bracing unit length shall be considered as multiple bracing units. The number of bracing units shall be determined by dividing the wall segment length by the minimum bracing unit length. Full-height sheathed segments of wall narrower than the minimum bracing unit length shall not contribute toward a bracing unit except as specified in Section R602.12.6.

R602.12.4 Number of bracing units. Each side of the circumscribed rectangle, as shown in Figure R602.12.1, shall have, at a minimum, the number of bracing units in accordance with Table R602.12.4 placed on the parallel exterior walls facing the side of the rectangle. Bracing units shall then be placed using the distribution requirements specified in Section R602.12.5.

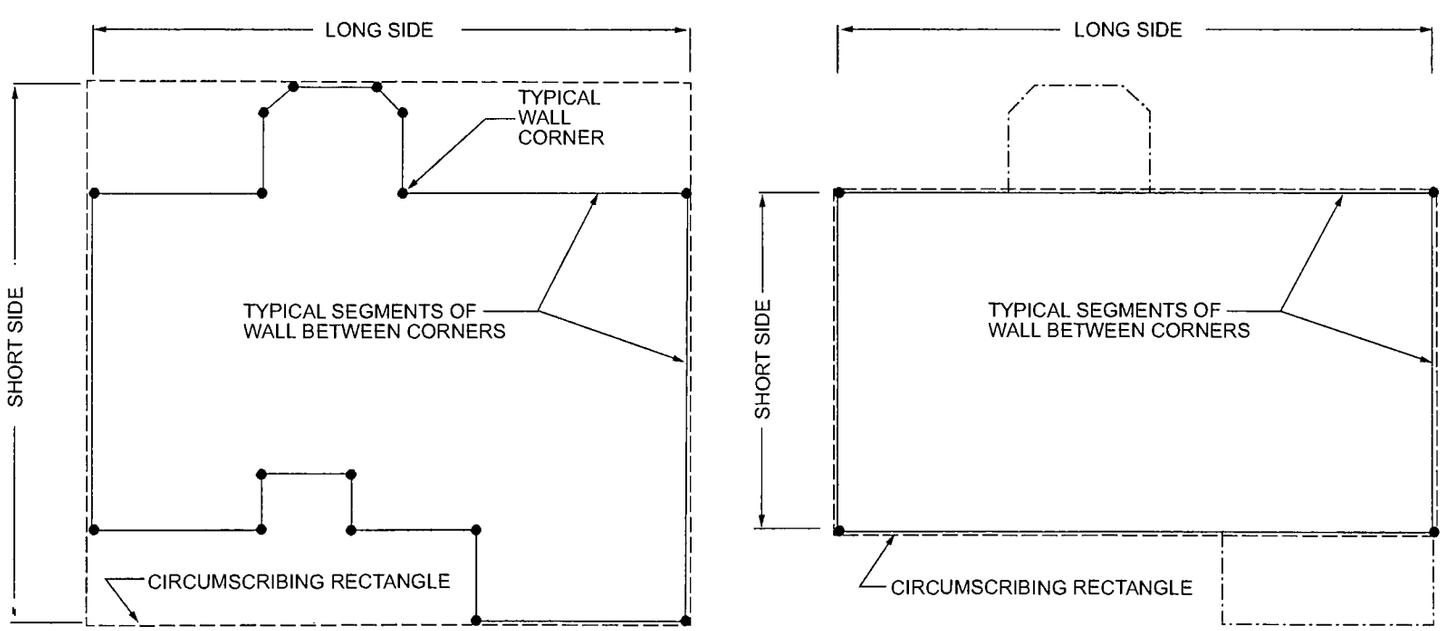

FIGURE R602.12.1
RECTANGLE CIRCUMSCRIBING AN ENCLOSED BUILDING

TABLE R602.12.4
MINIMUM NUMBER OF BRACING UNITS ON EACH SIDE OF THE CIRCUMSCRIBED RECTANGLE

ULTIMATE DESIGN WIND SPEED (mph)	STORY LEVEL	EAVE-TO-RIDGE HEIGHT (feet)	MINIMUM NUMBER OF BRACING UNITS ON EACH LONG SIDE[a, b, d]						MINIMUM NUMBER OF BRACING UNITS ON EACH SHORT SIDE[a, b, d]					
			Length of short side (feet)[c]						Length of long side (feet)[c]					
			10	20	30	40	50	60	10	20	30	40	50	60
115		10	1	2	2	2	3	3	1	2	2	2	3	3
			2	3	3	4	5	6	2	3	3	4	5	6
			2	3	4	6	7	8	2	3	4	6	7	8
		15	1	2	3	3	4	4	1	2	3	3	4	4
			2	3	4	5	6	7	2	3	4	5	6	7
			2	4	5	6	7	9	2	4	5	6	7	9
130		10	1	2	2	3	3	4	1	2	2	3	3	4
			2	3	4	5	6	7	2	3	4	5	6	7
			2	4	5	7	8	10	2	4	5	7	8	10
		15	2	3	3	4	4	6	2	3	3	4	4	6
			3	4	6	7	8	10	3	4	6	7	8	10
			3	6	7	10	11	13	3	6	7	10	11	13

For SI: 1 inch = 25.4 mm, 1 foot = 304.8 mm, 1 mile per hour = 0.447m/s.

a. Interpolation shall not be permitted.

b. Cripple walls or wood-framed basement walls in a walk-out condition shall be designated as the first story and the stories above shall be redesignated as the second and third stories, respectively, and shall be prohibited in a three-story structure.

c. Actual lengths of the sides of the circumscribed rectangle shall be rounded to the next highest unit of 10 when using this table.

d. For Exposure Category C, multiply bracing units by a factor of 1.20 for a one-story building, 1.30 for a two-story building and 1.40 for a three-story building.

R602.12.5 Distribution of bracing units. The placement of bracing units on exterior walls shall meet all of the following requirements as shown in Figure R602.12.5.

1. A bracing unit shall begin not more than 12 feet (3658 mm) from any wall corner.
2. The distance between adjacent edges of bracing units shall be not greater than 20 feet (6096 mm).
3. Segments of wall greater than 8 feet (2438 mm) in length shall have not less than one bracing unit.

R602.12.6 Narrow panels. The bracing methods referenced in Section R602.10 and specified in Sections R602.12.6.1 through R602.12.6.3 shall be permitted where using simplified wall bracing.

R602.12.6.1 Method CS-G. Braced wall panels constructed as Method CS-G in accordance with Tables R602.10.4 and R602.10.5 shall be permitted for one-story garages where all framed portions of all exterior walls are sheathed with wood structural panels. Each CS-G panel shall be equivalent to 0.5 of a bracing unit. Segments of wall that include a Method CS-G panel shall meet the requirements of Section R602.10.4.2.

R602.12.6.2 Method CS-PF. Braced wall panels constructed as Method CS-PF in accordance with Section R602.10.6.4 shall be permitted where all framed portions of all exterior walls are sheathed with wood structural panels. Each CS-PF panel shall equal 0.75 bracing units. Not more than four CS-PF panels shall be permitted on all segments of walls parallel to each side of the circumscribed rectangle. Segments of wall that include a Method CS-PF panel shall meet the requirements of Section R602.10.4.2.

R602.12.6.3 Methods ABW, PFH and PFG. Braced wall panels constructed as Method ABW, PFH and PFG shall be permitted where bracing units are constructed using wood structural panels applied either continuously or intermittently. Each ABW and PFH panel shall equal one bracing unit and each PFG panel shall be equal to 0.75 bracing unit.

R602.12.7 Lateral support. For bracing units located along the eaves, the vertical distance from the outside edge of the top wall plate to the roof sheathing above shall not exceed 9.25 inches (235 mm) at the location of a bracing unit unless lateral support is provided in accordance with Section R602.10.8.2.

R602.12.8 Stem walls. Masonry stem walls with a height and length of 48 inches (1219 mm) or less supporting a bracing unit or a Method CS-G, CS-PF or PFG braced wall panel shall be constructed in accordance with Figure R602.10.9. Concrete stem walls with a length of 48 inches (1219 mm) or less, greater than 12 inches (305 mm) tall and less than 6 inches (152 mm) thick shall be reinforced sized and located in accordance with Figure R602.10.9.

SECTION R603
COLD-FORMED STEEL WALL FRAMING

R603.1 General. Elements shall be straight and free of any defects that would significantly affect structural performance. Cold-formed steel wall framing members shall be in accordance with the requirements of this section.

R603.1.1 Applicability limits. The provisions of this section shall control the construction of exterior cold-formed steel wall framing and interior load-bearing cold-formed steel wall framing for buildings not more than 60 feet (18 288 mm) long perpendicular to the joist or truss span, not more than 40 feet (12 192 mm) wide parallel to the joist or truss span, and less than or equal to three stories above grade plane. Exterior walls installed in accordance with the provisions of this section shall be considered as load-bearing walls. Cold-formed steel walls constructed in accordance with the provisions of this section shall be limited to sites where the ultimate design wind speed is less than 140 miles per hour (63 m/s), Exposure Category B or C, and the ground snow load is less than or equal to 70 pounds per square foot (3.35 kPa).

R603.1.2 In-line framing. Load-bearing cold-formed steel studs constructed in accordance with Section R603 shall be located in-line with joists, trusses and rafters in accordance with Figure R603.1.2 and the tolerances specified as follows:

1. The maximum tolerance shall be $^3/_4$ inch (19 mm) between the centerline of the horizontal framing member and the centerline of the vertical framing member.

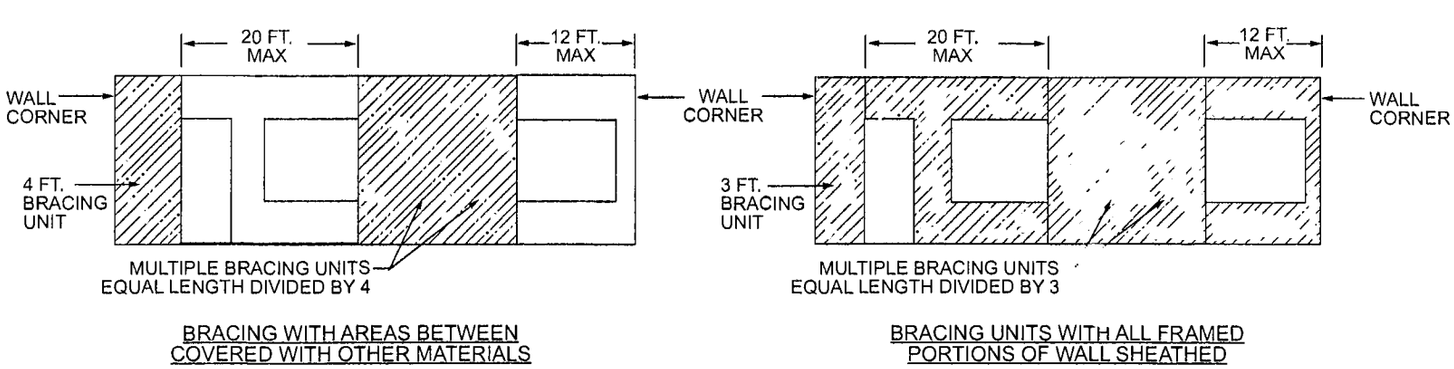

For SI: 1 foot = 304.8 mm.

FIGURE R602.12.5
BRACING UNIT DISTRIBUTION

2. Where the centerline of the horizontal framing member and bearing stiffener is located to one side of the centerline of the vertical framing member, the maximum tolerance shall be $^1/_8$ inch (3 mm) between the web of the horizontal framing member and the edge of the vertical framing member.

R603.2 Structural framing. Load-bearing cold-formed steel wall framing members shall be in accordance with this section.

R603.2.1 Material. Load-bearing cold-formed steel framing members shall be cold formed to shape from structural-quality sheet steel complying with the requirements of ASTM A1003: Structural Grades 33 Type H and 50 Type H.

R603.2.2 Corrosion protection. Load-bearing cold-formed steel framing shall have a metallic coating complying with ASTM A1003 and one of the following:

1. Not less than G 60 in accordance with ASTM A653.
2. Not less than AZ 50 in accordance with ASTM A792.

R603.2.3 Dimension, thickness and material grade. Load-bearing cold-formed steel wall framing members shall comply with Figure R603.2.3(1) and with the dimensional and thickness requirements specified in Table R603.2.3. Additionally, C-shaped sections shall have a minimum flange width of $1^5/_8$ inches (41 mm) and a maximum flange width of 2 inches (51 mm). The minimum lip size for C-shaped sections shall be $^1/_2$ inch (12.7 mm). Track sections shall comply with Figure R603.2.3(2) and shall have a minimum flange width of $1^1/_4$ inches (32 mm). Minimum Grade 33 ksi steel shall be used wherever 33 mil and 43 mil thicknesses are specified. Minimum Grade 50 ksi steel shall be used wherever 54 and 68 mil thicknesses are specified.

R603.2.4 Identification. Load-bearing cold-formed steel framing members shall have a legible label, stencil, stamp or embossment with the following information as a minimum:

1. Manufacturer's identification.
2. Minimum base steel thickness in inches (mm).
3. Minimum coating designation.
4. Minimum yield strength, in kips per square inch (ksi) (MPa).

R603.2.5 Fastening. Screws for steel-to-steel connections shall be installed with a minimum edge distance and center-to-center spacing of $^1/_2$ inch (12.7 mm), shall be self-drilling tapping and shall conform to ASTM C1513. Structural sheathing shall be attached to cold-formed steel studs with minimum No. 8 self-drilling tapping screws that conform to ASTM C1513. Screws for attaching structural sheathing to cold-formed steel wall framing shall have a minimum head diameter of 0.292 inch (7.4 mm) with countersunk heads and shall be installed with a minimum edge distance of $^3/_8$ inch (9.5

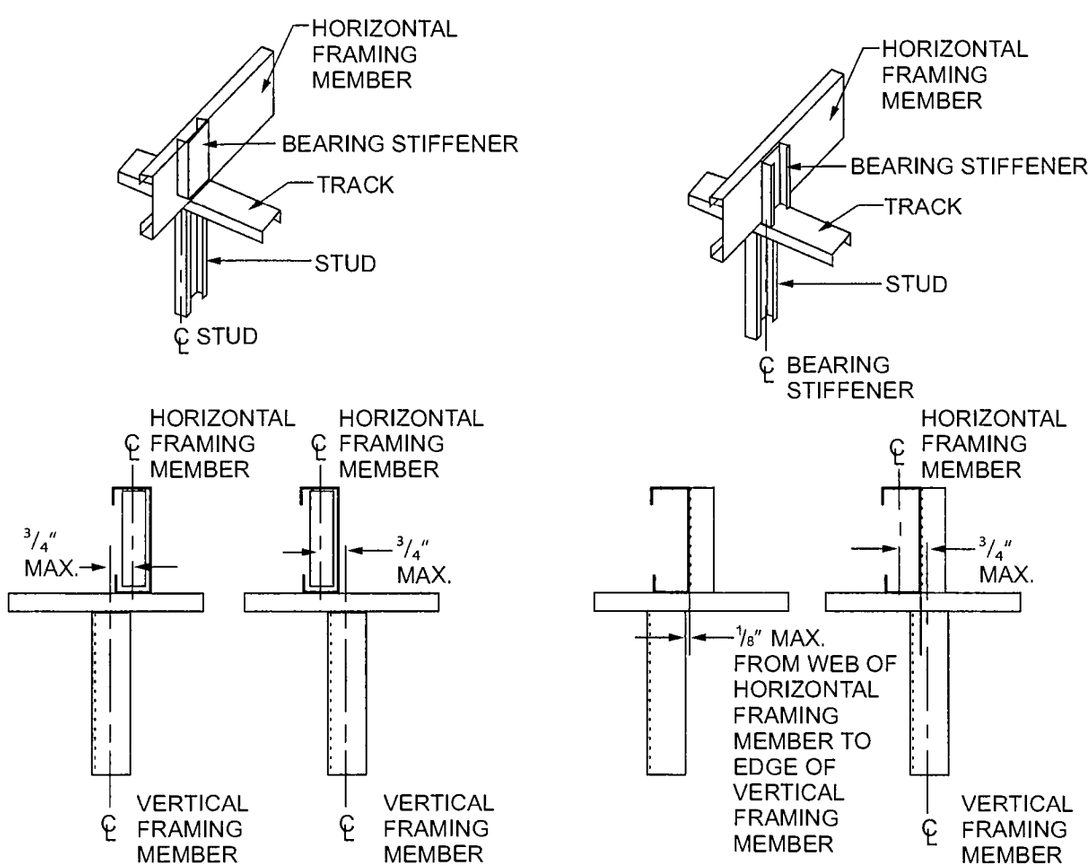

For SI: 1 inch = 25.4 mm.

FIGURE R603.1.2
IN-LINE FRAMING

mm). Gypsum board shall be attached to cold-formed steel wall framing with minimum No. 6 screws conforming to ASTM C954 or ASTM C1513 with a bugle-head style and shall be installed in accordance with Section R702. For connections, screws shall extend through the steel not fewer than three exposed threads. Fasteners shall have rust-inhibitive coating suitable for the installation in which they are being used, or be manufactured from material not susceptible to corrosion.

R603.2.6 Web holes, web hole reinforcing and web hole patching. Web holes, web hole reinforcing and web hole patching shall be in accordance with this section.

R603.2.6.1 Web holes. Web holes in wall studs and other structural members shall comply with all of the following conditions:

1. Holes shall conform to Figure R603.2.6.1.
2. Holes shall be permitted only along the centerline of the web of the framing member.
3. Holes shall have a center-to-center spacing of not less than 24 inches (610 mm).
4. Holes shall have a web hole width not greater than 0.5 times the member depth, or $1^1/_2$ inches (38 mm).
5. Holes shall have a web hole length not exceeding $4^1/_2$ inches (114 mm).
6. Holes shall have a minimum distance between the edge of the bearing surface and the edge of the web hole of not less than 10 inches (254 mm).

Framing members with web holes not conforming to the above requirements shall be reinforced in accordance with Section R603.2.6.2, patched in accordance with Section R603.2.6.3 or designed in accordance with accepted engineering practice.

R603.2.6.2 Web hole reinforcing. Web holes in gable endwall studs not conforming to the requirements of Section R603.2.6.1 shall be permitted to be reinforced if the hole is located fully within the center 40 percent of the span and the depth and length of the hole does not exceed 65 percent of the flat width of the web. The reinforcing shall be a steel plate or C-shaped section with a hole that does not exceed the web hole size limitations of Section R603.2.6.1 for the member being reinforced. The steel reinforcing shall be the same thickness as the receiving member and shall extend not less than 1 inch (25 mm) beyond all edges of the hole. The steel reinforcing shall be fastened to the web of the receiving member with No. 8 screws spaced not more than 1 inch (25 mm) center-to-center along the edges of the patch with minimum edge distance of $^1/_2$ inch (12.7 mm).

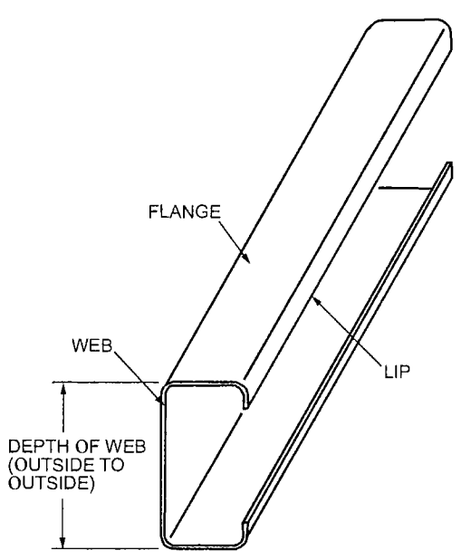

FIGURE R603.2.3(1)
C-SHAPED SECTION

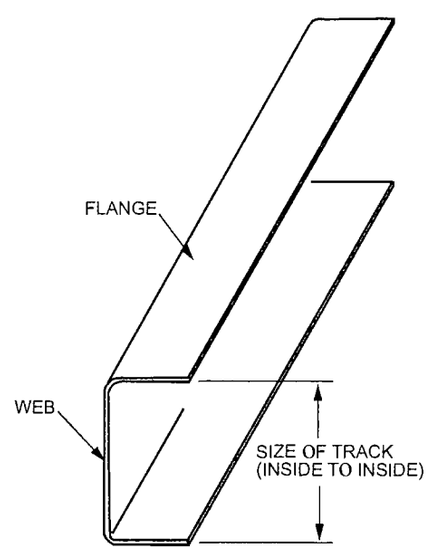

FIGURE R603.2.3(2)
TRACK SECTION

TABLE R603.2.3
LOAD-BEARING COLD-FORMED STEEL STUD SIZES AND THICKNESSES

MEMBER DESIGNATION[a]	WEB DEPTH (inches)	MINIMUM BASE STEEL THICKNESS mil (inches)
350S162-t	3.5	33 (0.0329), 43 (0.0428), 54 (0.0538)
550S162-t	5.5	33 (0.0329), 43 (0.0428), 54 (0.0538), 68 (0.0677)

For SI: 1 inch = 25.4 mm; 1 mil = 0.0254 mm.

a. The member designation is defined by the first number representing the member depth in hundredths of an inch, "S" representing a stud or joist member, the second number representing the flange width in hundredths of an inch, and the letter "t" shall be a number representing the minimum base metal thickness in mils.

R603.2.6.3 Hole patching. Web holes in wall studs and other structural members not conforming to the requirements in Section R603.2.6.1 shall be permitted to be patched in accordance with either of the following methods:

1. Framing members shall be replaced or designed in accordance with accepted engineering practice where web holes exceed the following size limits:
   1.1. The depth of the hole, measured across the web, exceeds 70 percent of the flat width of the web.
   1.2. The length of the hole measured along the web exceeds 10 inches (254 mm) or the depth of the web, whichever is greater.
2. Web holes not exceeding the dimensional requirements in Section R603.2.6.3, Item 1, shall be patched with a solid steel plate, stud section or track section in accordance with Figure R603.2.6.3. The steel patch shall, as a minimum, be the same thickness as the receiving member and shall extend not less than 1 inch (25 mm) beyond all edges of the hole. The steel patch shall be fastened to the web of the receiving member with No. 8 screws spaced not more than 1 inch (25 mm) center-to-center along the edges of the patch with a minimum edge distance of $^1/_2$ inch (12.7 mm).

R603.3 Wall construction. Exterior cold-formed steel framed walls and interior load-bearing cold-formed steel framed walls shall be constructed in accordance with the provisions of this section.

R603.3.1 Wall to foundation or floor connection. Cold-formed steel framed walls shall be anchored to foundations or floors in accordance with Table R603.3.1 and Figure R603.3.1(1), R603.3.1(2), R603.3.1(3) or R603.3.1(4). Anchor bolts shall be located not more than 12 inches (305 mm) from corners or the termination of bottom tracks. Anchor bolts shall extend not less than 15 inches (381 mm) into masonry or 7 inches (178 mm) into concrete. Foundation anchor straps shall be permitted, in lieu of anchor bolts, if spaced as required to provide equivalent anchorage to the required anchor bolts and installed in accordance with manufacturer's requirements.

R603.3.1.1 Gable endwalls. Gable endwalls with heights greater than 10 feet (3048 mm) shall be anchored to foundations or floors in accordance with Table R603.3.1.1(1) or R603.3.1.1(2).

R603.3.2 Minimum stud sizes. Cold-formed steel walls shall be constructed in accordance with Figure R603.3.1(1), R603.3.1(2) or R603.3.1(3), as applicable. Exterior wall stud size and thickness shall be determined in accordance with the limits set forth in Tables R603.3.2(2) through R603.3.2(16). Interior load-bearing wall stud size and thickness shall be determined in accordance with the limits set forth in Tables R603.3.2(2) through R603.3.2(16) based on an ultimate design wind speed of 115 miles per hour (51 m/s), Exposure Category B, and the building width, stud spacing and snow load, as appropriate. Fastening requirements shall be in accordance with Section R603.2.5 and Table R603.3.2(1). Top and bottom tracks shall have the same minimum thickness as the wall studs.

Exterior wall studs shall be permitted to be reduced to the next thinner size, as shown in Tables R603.3.2(2) through R603.3.2(16), but not less than 33 mils (0.84 mm), where both of the following conditions exist:

1. Minimum of $^1/_2$-inch (12.7 mm) gypsum board is installed and fastened on the interior surface in accordance with Section R702.
2. Wood structural sheathing panels of minimum $^7/_{16}$-inch-thick (11.1 mm) oriented strand board or $^{15}/_{32}$-

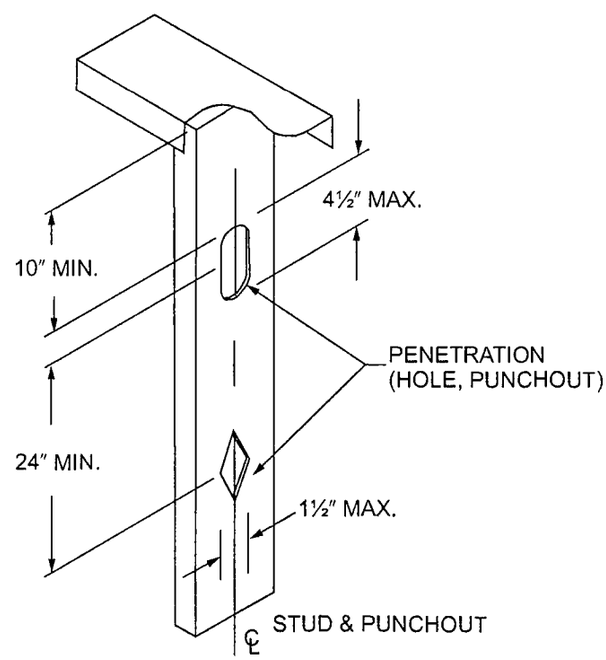

For SI: 1 inch = 25.4 mm.

FIGURE R603.2.6.1
WALL STUD WEB HOLES

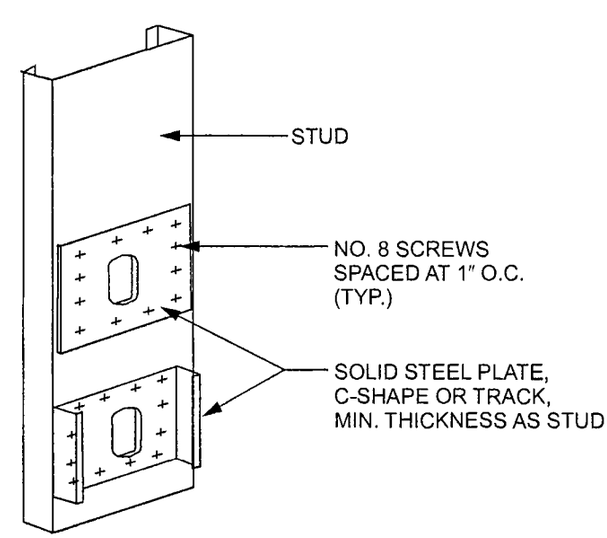

For SI: 1 inch = 25.4 mm.

FIGURE R603.2.6.3
WALL STUD WEB HOLE PATCH

inch-thick (12 mm) plywood are installed and fastened in accordance with Section R603.9.1 and Table R603.3.2(1) on the outside surface.

Interior load-bearing walls shall be permitted to be reduced to the next thinner size, as shown in Tables R603.3.2(2) through R603.3.2(16), but not less than 33 mils (0.84 mm), where not less than $^1/_2$-inch (12.7 mm) gypsum board is installed and fastened in accordance with Section R702 on both sides of the wall. The tabulated stud thickness for load-bearing walls shall be used where the attic load is 10 pounds per square foot (480 Pa) or less. A limited attic storage load of 20 pounds per square foot (960 Pa) shall be permitted provided that the next higher snow load column is used to select the stud size from Tables R603.3.2(2) through R603.3.2(16).

For two-story buildings, the tabulated stud thickness for walls supporting one floor, roof and ceiling shall be used where the second-floor live load is 30 pounds per square foot (1440 Pa). Second-floor live loads of 40 psf (1920 Pa) shall be permitted provided that the next higher snow load column is used to select the stud size from Tables R603.3.2(2) through R603.3.2(11).

For three-story buildings, the tabulated stud thickness for walls supporting one or two floors, roof and ceiling shall be used where the third-floor live load is 30 pounds per square foot (1440 Pa). Third-floor live loads of 40 pounds per square foot (1920 Pa) shall be permitted provided that the next higher snow load column is used to select the stud size from Tables R603.3.2(12) through R603.3.2(16).

R603.3.2.1 Gable endwalls. The size and thickness of gable endwall studs with heights less than or equal to 10 feet (3048 mm) shall be permitted in accordance with the limits set forth in Table R603.3.2.1(1). The size and thickness of gable endwall studs with heights greater than 10 feet (3048 mm) shall be determined in accordance with the limits set forth in Table R603.3.2.1(2).

TABLE R603.3.1
WALL TO FOUNDATION OR FLOOR CONNECTION REQUIREMENTS[a, b]

FRAMING CONDITION			ULTIMATE WIND SPEED AND EXPOSURE CATEGORY (mph)					
			115 B	120 B	130 B or 115 C	< 140 B or 120 C	130 C	< 140 C
Wall bottom track to floor per Figure R603.3.1(1)			1-No. 8 screw at 12″ o.c.	1-No. 8 screw at 8″ o.c.	2-No. 8 screws at 8″ o.c.	2-No. 8 screws at 6″ o.c.	3-No. 8 screws at 8″ o.c.	3-No. 8 screws at 6″ o.c.
Wall bottom track to foundation per Figure R603.3.1(2)[d]			$^1/_2$″ minimum diameter anchor bolt at 6′ o.c.	$^1/_2$″ minimum diameter anchor bolt at 6′ o.c.	$^1/_2$″ minimum diameter anchor bolt at 4′ o.c.	$^1/_2$″ minimum diameter anchor bolt at 4′ o.c.	$^1/_2$″ minimum diameter anchor bolt at 3′-4″ o.c.	$^1/_2$″ minimum diameter anchor bolt at 2′-8″ o.c.
Wall bottom track to wood sill per Figure R603.3.1(3)			Steel plate spaced at 4′ o.c., with 4-No. 8 screws and 4-10d or 6-8d common nails	Steel plate spaced at 4′ o.c., with 4-No. 8 screws and 4-10d or 6-8d common nails	Steel plate spaced at 3′ o.c., with 4-No. 8 screws and 4-10d or 6-8d common nails	Steel plate spaced at 3′ o.c., with 4-No. 8 screws and 4-10d or 6-8d common nails	Steel plate spaced at 2′ o.c., with 4-No. 8 screws and 4-10d or 6-8d common nails	Steel plate spaced at 1′-4″ o.c., with 4-No. 8 screws and 4-10d or 6-8d common nails
Wind uplift connector strength (lbs)[c, e]	Stud Spacing (inches)	Roof Span (feet)						
	16	24	NR	NR	NR	NR	NR	NR
		28	NR	NR	NR	NR	NR	339
		32	NR	NR	NR	NR	NR	382
		36	NR	NR	NR	NR	333	426
		40	NR	NR	NR	NR	368	470
	24	24	NR	NR	NR	NR	343	443
		28	NR	NR	NR	NR	395	508
		32	NR	NR	NR	330	447	573
		36	NR	NR	NR	371	500	639
		40	NR	NR	345	411	552	704

For SI: 1 inch = 25.4 mm, 1 mile per hour = 0.447 m/s, 1 foot = 304.8 mm, 1 pound = 4.45 N.

a. Anchor bolts are to be located not more than 12 inches from corners or the termination of bottom tracks, such as at door openings or corners. Bolts are to extend not less than 15 inches into masonry or 7 inches into concrete.

b. All screw sizes shown are minimum.

c. NR = Uplift connector not required.

d. Foundation anchor straps are permitted in place of anchor bolts, if spaced as required to provide equivalent anchorage to the required anchor bolts and installed in accordance with manufacturer's requirements.

e. See Figure R603.3.1(4) for details.

TABLE R603.3.1.1(1)
GABLE ENDWALL TO FLOOR CONNECTION REQUIREMENTS[a, b, c]

ULTIMATE WIND SPEED (mph)		WALL BOTTOM TRACK TO FLOOR JOIST OR TRACK CONNECTION		
Exposure Category		Stud height, *h* (feet)		
B	C	$10 < h \leq 14$	$14 < h \leq 18$	$18 < h \leq 22$
115	—	1-No. 8 screw @ 12″ o.c.	1-No. 8 screw @ 12″ o.c.	1-No. 8 screw @ 12″ o.c.
120	—	1-No. 8 screw @ 12″ o.c.	1-No. 8 screw @ 12″ o.c.	1-No. 8 screw @ 12″ o.c.
130	115	1-No. 8 screw @ 12″ o.c.	1-No. 8 screw @ 12″ o.c.	2-No. 8 screws @ 12″ o.c.
< 140	120	1-No. 8 screw @ 12″ o.c.	1-No. 8 screw @ 12″ o.c.	2-No. 8 screws @ 12″ o.c.
—	130	2-No. 8 screws @ 12″ o.c.	1-No. 8 screw @ 8″ o.c.	2-No. 8 screws @ 8″ o.c.
—	< 140	2-No. 8 screws @ 12″ o.c.	1-No. 8 screw @ 8″ o.c.	2-No. 8 screws @ 8″ o.c.

For SI: 1 inch = 25.4 mm, 1 mile per hour = 0.447 m/s, 1 foot = 304.8 mm.

a. Refer to Table R603.3.1.1(2) for gable endwall bottom track to foundation connections.

b. Where attachment is not given, special design is required.

c. Stud height, *h*, is measured from wall bottom track to wall top track or brace connection height.

TABLE R603.3.1.1(2)
GABLE ENDWALL BOTTOM TRACK TO FOUNDATION CONNECTION REQUIREMENTS[a, b, c]

ULTIMATE WIND SPEED (mph)		MINIMUM SPACING FOR $^1/_2$-INCH-DIAMETER ANCHOR BOLTS[d]		
Exposure Category		Stud height, *h* (feet)		
B	C	$10 < h \leq 14$	$14 < h \leq 18$	$18 < h \leq 22$
115	—	6′- 0″ o.c.	6′- 0″ o.c.	6′- 0″ o.c.
120	—	6′- 0″ o.c.	5′- 7″ o.c.	6′- 0″ o.c.
130	115	5′- 0″ o.c.	6′- 0″ o.c.	6′- 0″ o.c.
< 140	120	6′- 0″ o.c.	5′- 6″ o.c.	6′- 0″ o.c.
—	130	5′- 3″ o.c.	6′- 0″ o.c.	6′- 0″ o.c.
—	< 140	3′- 0″ o.c.	3′- 0″ o.c.	3′- 0″ o.c.

For SI: 1 inch = 25.4 mm, 1 mile per hour = 0.447 m/s, 1 foot = 304.8 mm.

a. Refer to Table R603.3.1.1(1) for gable endwall bottom track to floor joist or track connection connections.

b. Where attachment is not given, special design is required.

c. Stud height, *h*, is measured from wall bottom track to wall top track or brace connection height.

d. Foundation anchor straps are permitted in place of anchor bolts if spaced as required to provide equivalent anchorage to the required anchor bolts and installed in accordance with manufacturer's requirements.

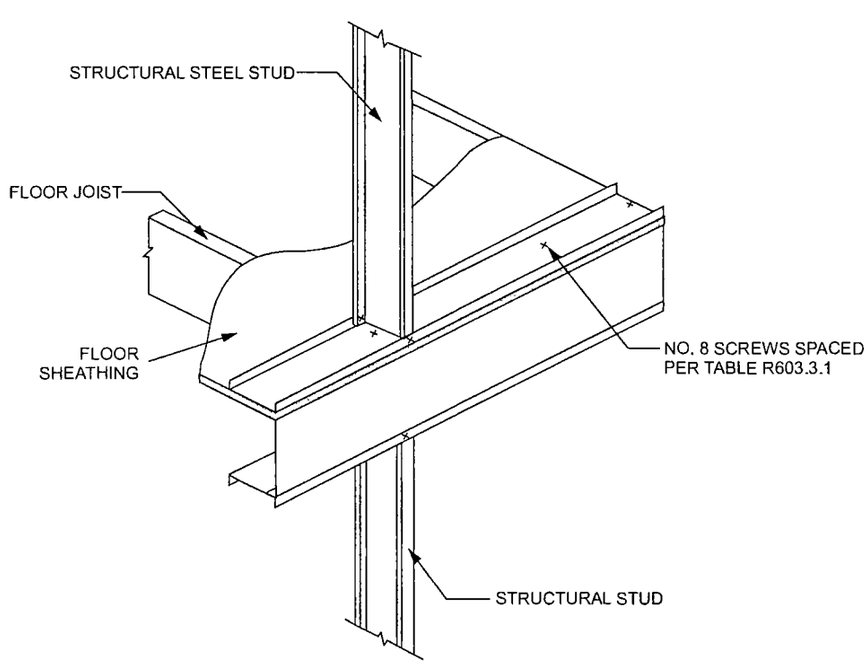

FIGURE R603.3.1(1)
WALL TO FLOOR CONNECTION

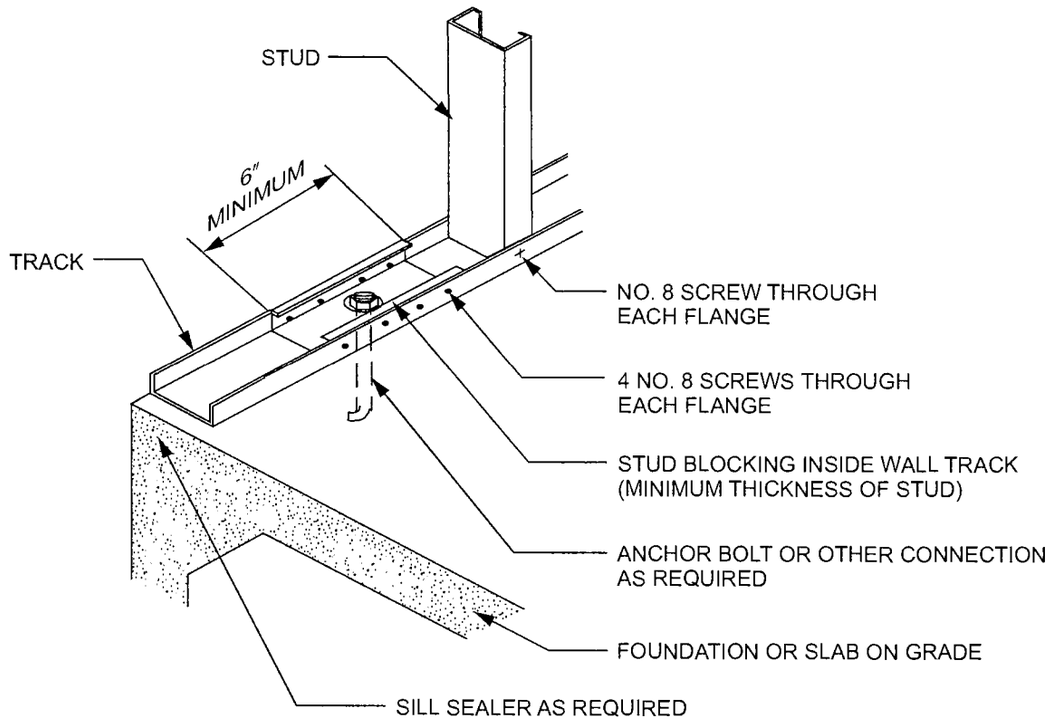

For SI: 1 inch = 25.4 mm.

FIGURE R603.3.1(2)
WALL TO FOUNDATION CONNECTION

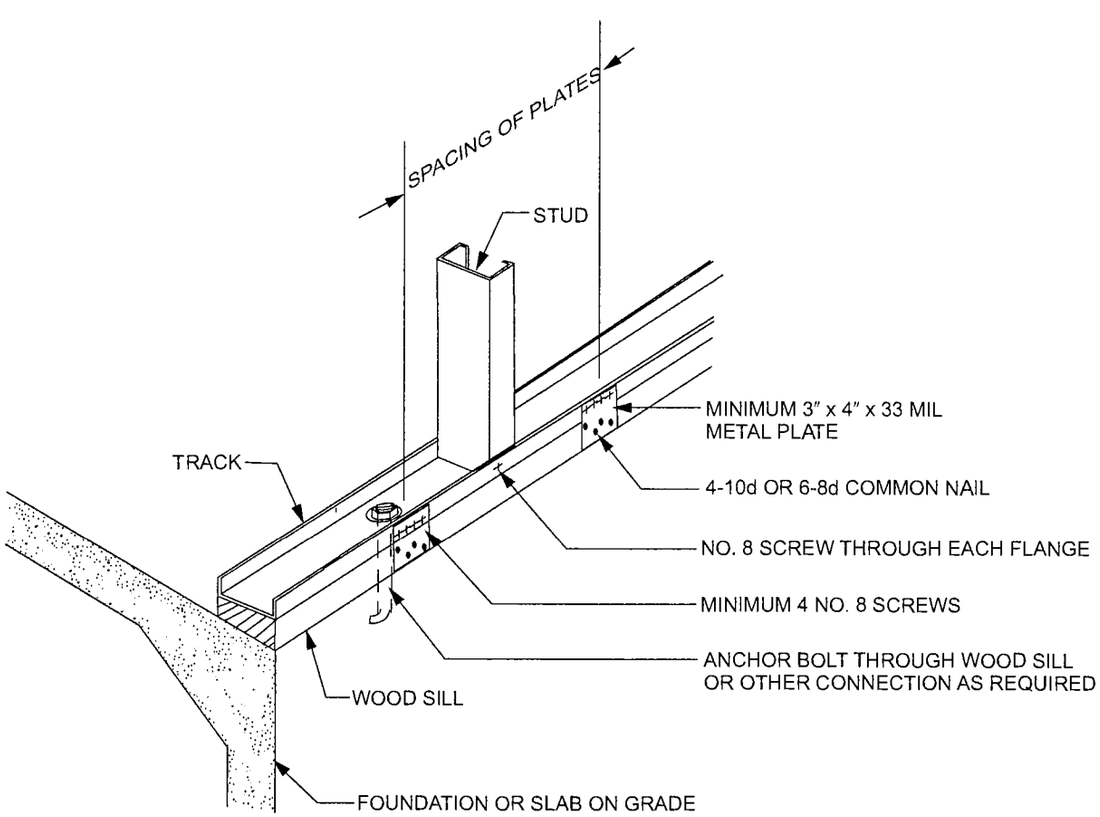

For SI. 1 mil = 0.0254 mm, 1 inch = 25.4 mm.

FIGURE R603.3.1(3)
WALL TO WOOD SILL CONNECTION

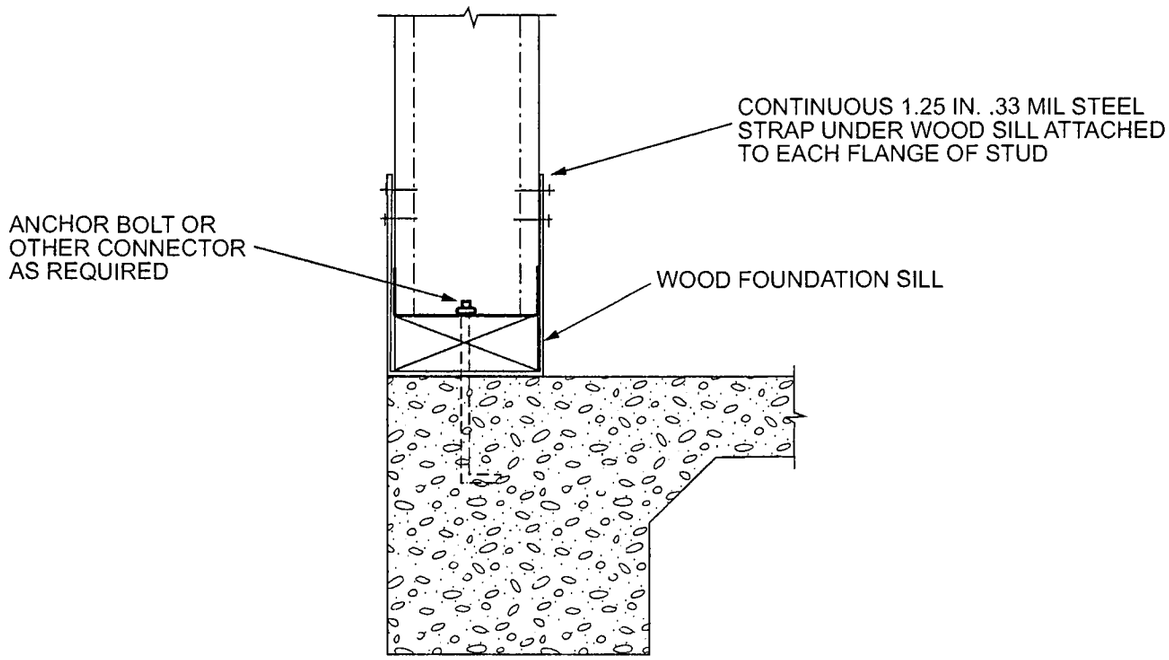

For SI: 1 mil = 0.0254 mm, 1 inch = 25.4 mm.

FIGURE R603.3.1(4)
WIND UPLIFT CONNECTOR

TABLE R603.3.2(1)
WALL FASTENING SCHEDULE[a]

DESCRIPTION OF BUILDING ELEMENT	NUMBER AND SIZE OF FASTENERS[a]	SPACING OF FASTENERS
Wall stud to top or bottom track	2-No. 8 screws	Each end of stud, one per flange
Structural sheathing to wall studs	No. 8 screws[b]	6″ o.c. on edges and 12″ o.c. at intermediate supports
$^1/_2$″ gypsum board to framing	No. 6 screws	12″ o.c.

For SI: 1 inch = 25.4 mm.

a. All screw sizes shown are minimum.

b. Screws for attachment of structural sheathing panels are to be bugle-head, flat-head, or similar head styles with a minimum head diameter of 0.29 inch.

TABLE R603.3.2(2)
24-FOOT-WIDE BUILDING SUPPORTING ROOF AND CEILING ONLY[a, b, c, d]

ULTIMATE WIND SPEED AND EXPOSURE CATEGORY (mph)		MEMBER SIZE	STUD SPACING (Inches)	MINIMUM STUD THICKNESS (mils)											
				8-foot Studs				9-foot Studs				10-foot Studs			
				Ground Snow Load (psf)											
Exp. B	Exp. C			20	30	50	70	20	30	50	70	20	30	50	70
115	—	350S162	16	33	33	33	33	33	33	33	33	33	33	33	33
			24	33	33	33	43	33	33	33	43	33	33	43	43
		550S162	16	33	33	33	33	33	33	33	33	33	33	33	33
			24	33	33	33	33	33	33	33	33	33	33	33	43
120	—	350S162	16	33	33	33	33	33	33	33	33	33	33	33	33
			24	33	33	33	43	33	33	33	43	43	43	43	43
		550S162	16	33	33	33	33	33	33	33	33	33	33	33	33
			24	33	33	33	43	33	33	33	33	33	33	33	43
130	115	350S162	16	33	33	33	33	33	33	33	33	33	33	33	33
			24	33	33	43	43	43	43	43	43	43	43	43	54
		550S162	16	33	33	33	33	33	33	33	33	33	33	33	33
			24	33	33	33	43	33	33	33	43	33	33	33	43
< 140	120	350S162	16	33	33	33	33	33	33	33	33	33	33	33	43
			24	33	33	43	43	43	43	43	43	54	54	54	54
		550S162	16	33	33	33	33	33	33	33	33	33	33	33	33
			24	33	33	33	43	33	33	33	43	43	43	43	43
—	130	350S162	16	33	33	33	33	33	33	33	33	43	43	43	43
			24	43	43	43	43	54	54	54	54	54	54	54	54
		550S162	16	33	33	33	33	33	33	33	33	33	33	33	33
			24	33	33	33	43	43	43	43	43	43	43	43	43
—	< 140	350S 162	16	33	33	33	33	43	43	43	43	43	43	43	43
			24	43	43	43	54	54	54	54	54	54	54	54	54
		550S 162	16	33	33	33	33	33	33	33	33	33	33	33	33
			24	43	43	43	43	43	43	43	43	43	43	43	43

For SI: 1 inch = 25.4 mm, 1 foot = 304.8 mm, 1 mil = 0.0254 mm, 1 mile per hour = 0.447 m/s, 1 pound per square foot = 0.0479 kPa, 1 ksi = 1,000 psi = 6.895 MPa.

a. Deflection criterion: *L*/240.

b. Design load assumptions:
Second-floor dead load is 10 psf.
Second-floor live load is 30 psf.
Roof/ceiling dead load is 12 psf.
Attic live load is 10 psf.

c. Building width is in the direction of horizontal framing members supported by the wall studs.

d. Minimum Grade 33 ksi steel shall be used for 33 mil and 43 mil thicknesses. Minimum Grade 50 ksi steel shall be used for 54 and 68 mil thicknesses.

TABLE R603.3.2(3)
28-FOOT-WIDE BUILDING SUPPORTING ROOF AND CEILING ONLY[a, b, c, d]

ULTIMATE WIND SPEED AND EXPOSURE CATEGORY (mph)		MEMBER SIZE	STUD SPACING (inches)	MINIMUM STUD THICKNESS (mils)											
				8-foot Studs				9-foot Studs				10-foot Studs			
				Ground Snow Load (psf)											
Exp. B	Exp. C			20	30	50	70	20	30	50	70	20	30	50	70
115	—	350S162	16	33	33	33	33	33	33	33	33	33	33	33	33
			24	33	33	43	43	33	33	43	43	33	33	43	54
		550S162	16	33	33	33	33	33	33	33	33	33	33	33	33
			24	33	33	33	43	33	33	33	43	33	33	33	43
120	—	350S162	16	33	33	33	33	33	33	33	33	33	33	33	33
			24	33	33	43	43	33	33	43	43	43	43	43	54
		550S162	16	33	33	33	33	33	33	33	33	33	33	33	33
			24	33	33	33	43	33	33	33	43	33	33	33	43
130	115	350S162	16	33	33	33	33	33	33	33	33	33	33	33	43
			24	33	33	43	54	43	43	43	54	43	43	43	54
		550S162	16	33	33	33	33	33	33	33	33	33	33	33	33
			24	33	33	33	43	33	33	33	43	33	33	33	43
< 140	120	350S162	16	33	33	33	33	33	33	33	33	33	33	33	43
			24	33	33	43	54	43	43	43	54	54	54	54	54
		550S162	16	33	33	33	33	33	33	33	33	33	33	33	33
			24	33	33	33	43	33	33	33	43	43	43	43	43
—	130	350S162	16	33	33	33	33	33	33	33	43	43	43	43	43
			24	43	43	43	54	54	54	54	54	54	54	54	54
		550S162	16	33	33	33	33	33	33	33	33	33	33	33	33
			24	33	33	33	43	43	43	43	43	43	43	43	43
—	< 140	350S 162	16	33	33	33	43	43	43	43	43	43	43	43	43
			24	43	43	43	54	54	54	54	54	54	54	54	54
		550S162	16	33	33	33	33	33	33	33	33	33	33	33	33
			24	43	43	43	43	43	43	43	43	43	43	43	43

For SI: 1 inch = 25.4 mm, 1 foot = 304.8 mm, 1 mil = 0.0254 mm, 1 mile per hour = 0.447 m/s, 1 pound per square foot = 0.0479 kPa, 1 ksi = 1,000 psi = 6.895 MPa.

a. Deflection criterion: *L*/240.

b. Design load assumptions:
Second-floor dead load is 10 psf.
Second-floor live load is 30 psf.
Roof/ceiling dead load is 12 psf.
Attic live load is 10 psf.

c. Building width is in the direction of horizontal framing members supported by the wall studs.

d. Minimum Grade 33 ksi steel shall be used for 33 mil and 43 mil thicknesses. Minimum Grade 50 ksi steel shall be used for 54 and 68 mil thicknesses.

TABLE R603.3.2(4)
32-FOOT-WIDE BUILDING SUPPORTING ROOF AND CEILING ONLY[a, b, c, d]

ULTIMATE WIND SPEED AND EXPOSURE CATEGORY (mph)		MEMBER SIZE	STUD SPACING (Inches)	MINIMUM STUD THICKNESS (mils)											
				8-foot Studs				9-foot Studs				10-foot Studs			
				Ground Snow Load (psf)											
Exp. B	Exp. C			20	30	50	70	20	30	50	70	20	30	50	70
115	—	350S162	16	33	33	33	33	33	33	33	33	33	33	33	43
			24	33	33	43	54	33	33	43	54	43	43	43	54
		550S162	16	33	33	33	33	33	33	33	33	33	33	33	33
			24	33	33	33	43	33	33	33	43	33	33	33	43
120	—	350S162	16	33	33	33	33	33	33	33	33	33	33	33	43
			24	33	33	43	54	33	33	43	54	43	43	43	54
		550S162	16	33	33	33	33	33	33	33	33	33	33	33	33
			24	33	33	33	43	33	33	33	43	33	33	43	43
130	115	350S162	16	33	33	33	43	33	33	33	43	33	33	33	43
			24	33	33	43	54	43	43	43	54	43	43	54	54
		550S162	16	33	33	33	33	33	33	33	33	33	33	33	33
			24	33	33	43	43	33	33	33	43	33	33	43	43
< 140	120	350S162	16	33	33	33	43	33	33	33	43	33	33	33	43
			24	33	33	43	54	43	43	43	54	54	54	54	54
		550S162	16	33	33	33	33	33	33	33	33	33	33	33	33
			24	33	33	43	43	33	33	33	43	43	43	43	43
—	130	350S162	16	33	33	33	43	33	33	33	43	43	43	43	43
			24	43	43	43	54	54	54	54	54	54	54	54	54
		550S162	16	33	33	33	33	33	33	33	33	33	33	33	33
			24	33	33	43	43	43	43	43	43	43	43	43	43
—	< 140	350S162	16	33	33	33	43	43	43	43	43	43	43	43	43
			24	43	43	54	54	54	54	54	54	54	54	54	54
		550S162	16	33	33	33	33	33	33	33	33	33	33	33	33
			24	43	43	43	43	43	43	43	43	43	43	43	43

For SI: 1 inch = 25.4 mm, 1 foot = 304.8 mm, 1 mil = 0.0254 mm, 1 mile per hour = 0.447 m/s, 1 pound per square foot = 0.0479 kPa, 1 ksi = 1,000 psi = 6.895 MPa.

a. Deflection criterion: *L*/240.

b. Design load assumptions:
Second-floor dead load is 10 psf.
Second-floor live load is 30 psf.
Roof/ceiling dead load is 12 psf.
Attic live load is 10 psf.

c. Building width is in the direction of horizontal framing members supported by the wall studs.

d. Minimum Grade 33 ksi steel shall be used for 33 mil and 43 mil thicknesses. Minimum Grade 50 ksi steel shall be used for 54 and 68 mil thicknesses.

TABLE R603.3.2(5)
36-FOOT-WIDE BUILDING SUPPORTING ROOF AND CEILING ONLY[a, b, c, d]

ULTIMATE WIND SPEED AND EXPOSURE CATEGORY (mph)		MEMBER SIZE	STUD SPACING (inches)	MINIMUM STUD THICKNESS (mils)											
				8-foot Studs				9-foot Studs				10-foot Studs			
				Ground Snow Load (psf)											
Exp. B	Exp. C			20	30	50	70	20	30	50	70	20	30	50	70
115	—	350S162	16	33	33	33	43	33	33	33	43	33	33	33	43
			24	33	33	43	54	33	33	43	54	43	43	54	54
		550S162	16	33	33	33	33	33	33	33	33	33	33	33	33
			24	33	33	43	43	33	33	43	43	33	33	43	43
120	—	350S162	16	33	33	33	43	33	33	33	43	33	33	33	43
			24	33	33	43	54	33	33	43	54	43	43	54	54
		550S162	16	33	33	33	33	33	33	33	33	33	33	33	33
			24	33	33	43	43	33	33	43	43	33	33	43	43
130	115	350S162	16	33	33	33	43	33	33	33	43	33	33	43	43
			24	33	43	43	54	43	43	43	54	43	43	54	54
		550S162	16	33	33	33	33	33	33	33	33	33	33	33	33
			24	33	33	43	43	33	33	43	43	33	33	43	43
< 140	120	350S162	16	33	33	33	43	33	33	33	33	33	33	43	43
			24	43	43	43	54	43	43	43	54	54	54	54	54
		550S162	16	33	33	33	33	33	33	33	33	33	33	33	33
			24	33	33	43	43	33	33	43	43	43	43	43	54
—	130	350S162	16	33	33	33	43	33	33	33	43	43	43	43	43
			24	43	43	54	54	54	54	54	54	54	54	54	54
		550S162	16	33	33	33	33	33	33	33	33	33	33	33	43
			24	33	33	43	54	43	43	43	43	43	43	43	54
—	< 140	350S162	16	33	33	33	43	43	43	43	43	43	43	43	54
			24	43	43	54	54	54	54	54	54	54	54	54	68
		550S162	16	33	33	33	33	33	33	33	33	33	33	33	43
			24	43	43	43	54	43	43	43	43	43	43	43	54

For SI: 1 inch = 25.4 mm, 1 foot = 304.8 mm, 1 mil = 0.0254 mm, 1 mile per hour = 0.447 m/s, 1 pound per square foot = 0.0479 kPa, 1 ksi = 1,000 psi = 6.895 MPa.

a. Deflection criterion: *L*/240.

b. Design load assumptions:
Second-floor dead load is 10 psf.
Second-floor live load is 30 psf.
Roof/ceiling dead load is 12 psf.
Attic live load is 10 psf.

c. Building width is in the direction of horizontal framing members supported by the wall studs.

d. Minimum Grade 33 ksi steel shall be used for 33 mil and 43 mil thicknesses. Minimum Grade 50 ksi steel shall be used for 54 and 68 mil thicknesses.

TABLE R603.3.2(6)
40-FOOT-WIDE BUILDING SUPPORTING ROOF AND CEILING ONLY[a, b, c, d]

ULTIMATE WIND SPEED AND EXPOSURE CATEGORY (mph)		MEMBER SIZE	STUD SPACING (Inches)	MINIMUM STUD THICKNESS (mils)											
				8-foot Studs				9-foot Studs				10-foot Studs			
				Ground Snow Load (psf)											
Exp. B	Exp. C			20	30	50	70	20	30	50	70	20	30	50	70
115	—	350S162	16	33	33	33	43	33	33	33	43	33	33	43	43
			24	33	33	43	54	33	43	43	54	43	43	54	54
		550S162	16	33	33	33	43	33	33	33	33	33	33	33	33
			24	33	33	43	54	33	33	43	43	33	33	43	54
120	—	350S162	16	33	33	33	43	33	33	33	43	33	33	43	43
			24	33	43	43	54	33	43	43	54	43	43	54	54
		550S162	16	33	33	33	43	33	33	33	33	33	33	33	43
			24	33	33	43	54	33	33	43	43	33	33	43	54
130	115	350S162	16	33	33	33	43	33	33	33	43	33	33	43	43
			24	43	43	54	54	43	43	54	54	43	54	54	54
		550S162	16	33	33	33	43	33	33	33	33	33	33	33	43
			24	33	33	43	54	33	33	43	54	33	33	43	54
< 140	120	350S162	16	33	33	33	43	33	33	33	43	33	33	43	43
			24	43	43	54	54	43	43	54	54	54	54	54	54
		550S162	16	33	33	33	43	33	33	33	33	33	33	33	43
			24	33	33	43	54	33	33	43	54	43	43	43	54
—	130	350S162	16	33	33	43	43	33	33	43	43	43	43	43	54
			24	43	43	54	54	54	54	54	54	54	54	54	68
		550S162	16	33	33	33	43	33	33	33	43	33	33	33	43
			24	33	33	43	54	43	43	43	54	43	43	43	54
—	< 140	350S162	16	33	33	43	43	43	43	43	43	43	43	43	54
			24	43	43	54	54	54	54	54	54	54	54	54	68
		550S162	16	33	33	33	43	33	33	33	43	33	33	33	43
			24	43	43	43	54	43	43	43	54	43	43	43	54

For SI: 1 inch = 25.4 mm, 1 foot = 304.8 mm, 1 mil = 0.0254 mm, 1 mile per hour = 0.447 m/s, 1 pound per square foot = 0.0479 kPa, 1 ksi = 1,000 psi = 6.895 MPa.

a. Deflection criterion: *L*/240.

b. Design load assumptions:
Second-floor dead load is 10 psf.
Second-floor live load is 30 psf.
Roof/ceiling dead load is 12 psf.
Attic live load is 10 psf.

c. Building width is in the direction of horizontal framing members supported by the wall studs.

d. Minimum Grade 33 ksi steel shall be used for 33 mil and 43 mil thicknesses. Minimum Grade 50 ksi steel shall be used for 54 and 68 mil thicknesses.

TABLE R603.3.2(7)
24-FOOT-WIDE BUILDING SUPPORTING ONE FLOOR, ROOF AND CEILING[a, b, c, d]

ULTIMATE WIND SPEED AND EXPOSURE CATEGORY (mph)		MEMBER SIZE	STUD SPACING (inches)	MINIMUM STUD THICKNESS (mils)											
				8-foot Studs				9-foot Studs				10-foot Studs			
				Ground Snow Load (psf)											
Exp. B	Exp. C			20	30	50	70	20	30	50	70	20	30	50	70
115	—	350S162	16	33	33	33	33	33	33	33	33	33	33	33	43
			24	33	33	43	43	43	43	43	43	43	43	43	54
		550S162	16	33	33	33	33	33	33	33	33	33	33	33	33
			24	33	33	33	43	33	33	33	43	33	33	33	43
120	—	350S162	16	33	33	33	33	33	33	33	33	33	33	33	43
			24	43	43	43	43	43	43	43	43	43	43	54	54
		550S162	16	33	33	33	33	33	33	33	33	33	33	33	33
			24	33	33	33	43	33	33	33	43	33	33	33	43
130	115	350S162	16	33	33	33	43	33	33	33	43	43	43	43	43
			24	43	43	43	54	43	43	54	54	54	54	54	54
		550S162	16	33	33	33	33	33	33	33	33	33	33	33	33
			24	33	33	33	43	33	33	33	43	33	33	43	43
< 140	120	350S162	16	33	33	33	43	33	33	43	43	43	43	43	43
			24	43	43	43	54	43	54	54	54	54	54	54	54
		550S162	16	33	33	33	33	33	33	33	33	33	33	33	33
			24	33	33	43	43	33	33	33	43	43	43	43	43
—	130	350S162	16	33	33	33	43	43	43	43	43	43	43	43	54
			24	43	43	54	54	54	54	54	54	54	54	54	54
		550S162	16	33	33	33	33	33	33	33	33	33	33	33	33
			24	33	33	43	43	43	43	43	43	43	43	43	43
—	< 140	350S162	16	43	43	43	43	43	43	43	43	54	54	54	54
			24	54	54	54	54	54	54	54	54	54	54	54	54
		550S162	16	33	33	33	33	33	33	33	33	33	33	33	33
			24	43	43	43	43	43	43	43	43	43	43	43	43

For SI: 1 inch = 25.4 mm, 1 foot = 304.8 mm, 1 mil = 0.0254 mm, 1 mile per hour = 0.447 m/s, 1 pound per square foot = 0.0479 kPa, 1 ksi = 1,000 psi = 6.895 MPa.

a. Deflection criterion: *L*/240.

b. Design load assumptions:
Second-floor dead load is 10 psf.
Second-floor live load is 30 psf.
Roof/ceiling dead load is 12 psf.
Attic live load is 10 psf.

c. Building width is in the direction of horizontal framing members supported by the wall studs.

d. Minimum Grade 33 ksi steel shall be used for 33 mil and 43 mil thicknesses. Minimum Grade 50 ksi steel shall be used for 54 and 68 mil thicknesses.

TABLE R603.3.2(8)
28-FOOT-WIDE BUILDING SUPPORTING ONE FLOOR, ROOF AND CEILING[a, b, c, d]

ULTIMATE WIND SPEED AND EXPOSURE CATEGORY (mph)		MEMBER SIZE	STUD SPACING (inches)	MINIMUM STUD THICKNESS (mils)											
				8-foot Studs				9-foot Studs				10-foot Studs			
				Ground Snow Load (psf)											
Exp. B	Exp. C			20	30	50	70	20	30	50	70	20	30	50	70
115	—	350S162	16	33	33	33	43	33	33	33	43	33	33	43	43
			24	43	43	43	54	43	43	43	54	43	43	54	54
		550S162	16	33	33	33	33	33	33	33	33	33	33	33	33
			24	33	33	43	43	33	33	43	43	33	33	43	43
120	—	350S162	16	33	33	33	43	33	33	33	43	33	33	43	43
			24	43	43	43	54	43	43	43	54	54	54	54	54
		550S162	16	33	33	33	33	33	33	33	33	33	33	33	33
			24	33	33	43	43	33	33	43	43	33	33	43	43
130	115	350S162	16	33	33	33	43	33	33	43	43	43	43	43	43
			24	43	43	43	54	43	54	54	54	54	54	54	54
		550S162	16	33	33	33	33	33	33	33	33	33	33	33	33
			24	33	33	43	43	33	33	43	43	43	43	43	43
< 140	120	350S162	16	33	33	33	43	43	43	43	43	43	43	43	43
			24	43	43	54	54	54	54	54	54	54	54	54	54
		550S162	16	33	33	33	33	33	33	33	33	33	33	33	33
			24	33	33	43	43	33	33	43	43	43	43	43	43
—	130	350S162	16	33	33	43	43	43	43	43	43	43	43	54	54
			24	54	54	54	54	54	54	54	54	54	54	54	54
		550S162	16	33	33	33	33	33	33	33	33	33	33	33	43
			24	33	33	43	43	43	43	43	43	43	43	43	43
—	< 140	350S162	16	43	43	43	43	43	43	43	43	54	54	54	54
			24	54	54	54	54	54	54	54	54	54	54	54	54
		550S162	16	33	33	33	33	33	33	33	33	33	33	33	43
			24	43	43	43	43	43	43	43	43	43	43	43	54

For SI: 1 inch = 25.4 mm, 1 foot = 304.8 mm, 1 mil = 0.0254 mm, 1 mile per hour = 0.447 m/s, 1 pound per square foot = 0.0479 kPa, 1 ksi = 1,000 psi = 6.895 MPa.

a. Deflection criterion: *L*/240.

b. Design load assumptions:
Second-floor dead load is 10 psf.
Second-floor live load is 30 psf.
Roof/ceiling dead load is 12 psf.
Attic live load is 10 psf.

c. Building width is in the direction of horizontal framing members supported by the wall studs.

d. Minimum Grade 33 ksi steel shall be used for 33 mil and 43 mil thicknesses. Minimum Grade 50 ksi steel shall be used for 54 and 68 mil thicknesses.

TABLE R603.3.2(9)
32-FOOT-WIDE BUILDING SUPPORTING ONE FLOOR, ROOF AND CEILING[a, b, c, d]

ULTIMATE WIND SPEED AND EXPOSURE CATEGORY (mph)		MEMBER SIZE	STUD SPACING (inches)	MINIMUM STUD THICKNESS (mils)											
				8-foot Studs				9-foot Studs				10-foot Studs			
				Ground Snow Load (psf)											
Exp. B	Exp. C			20	30	50	70	20	30	50	70	20	30	50	70
115	—	350S162	16	33	33	33	43	33	33	33	43	33	43	43	43
			24	43	43	43	54	43	43	43	54	54	54	54	54
		550S162	16	33	33	33	43	33	33	33	33	33	33	33	43
			24	33	43	43	54	33	33	43	43	33	33	43	43
120	—	350S162	16	33	33	33	43	33	33	33	43	43	43	43	43
			24	43	43	43	54	43	43	43	54	54	54	54	54
		550S162	16	33	33	33	43	33	33	33	33	33	33	33	43
			24	33	43	43	54	33	33	43	43	33	33	43	54
130	115	350S162	16	33	33	43	43	43	43	43	43	43	43	43	43
			24	43	43	54	54	54	54	54	54	54	54	54	54
		550S162	16	33	33	33	43	33	33	33	33	33	33	33	43
			24	33	43	43	54	33	33	43	43	43	43	43	54
< 140	120	350S162	16	33	33	43	43	43	43	43	43	43	43	43	54
			24	43	54	54	54	54	54	54	54	54	54	54	54
		550S162	16	33	33	33	43	33	33	33	43	33	33	33	43
			24	33	43	43	54	33	43	43	43	43	43	43	54
—	130	350S162	16	43	43	43	43	43	43	43	43	43	54	54	54
			24	54	54	54	54	54	54	54	54	54	54	54	54
		550S162	16	33	33	33	43	33	33	33	43	33	33	33	43
			24	43	43	43	54	43	43	43	54	43	43	43	54
—	< 140	350S162	16	43	43	43	43	43	43	43	54	54	54	54	54
			24	54	54	54	54	54	54	54	54	54	54	54	68
		550S162	16	33	33	33	43	33	33	33	43	33	33	33	43
			24	43	43	43	54	43	43	43	54	43	43	43	54

For SI: 1 inch = 25.4 mm, 1 foot = 304.8 mm, 1 mil = 0.0254 mm, 1 mile per hour = 0.447 m/s, 1 pound per square foot = 0.0479 kPa, 1 ksi = 1,000 psi = 6.895 MPa.

a. Deflection criterion: *L*/240.

b. Design load assumptions:
Second-floor dead load is 10 psf.
Second-floor live load is 30 psf.
Roof/ceiling dead load is 12 psf.
Attic live load is 10 psf.

c. Building width is in the direction of horizontal framing members supported by the wall studs.

d. Minimum Grade 33 ksi steel shall be used for 33 mil and 43 mil thicknesses. Minimum Grade 50 ksi steel shall be used for 54 and 68 mil thicknesses.

TABLE R603.3.2(10)
36-FOOT-WIDE BUILDING SUPPORTING ONE FLOOR, ROOF AND CEILING[a, b, c, d]

ULTIMATE WIND SPEED AND EXPOSURE CATEGORY (mph)		MEMBER SIZE	STUD SPACING (inches)	MINIMUM STUD THICKNESS (mils)											
				8-foot Studs				9-foot Studs				10-foot Studs			
				Ground Snow Load (psf)											
Exp. B	Exp. C			20	30	50	70	20	30	50	70	20	30	50	70
115	—	350S162	16	33	33	43	43	33	33	43	43	43	43	43	43
			24	43	43	54	54	43	43	54	54	54	54	54	54
		550S162	16	33	33	33	43	33	33	33	43	33	33	33	43
			24	43	43	43	54	43	43	43	54	43	43	43	54
120	—	350S162	16	33	33	43	43	33	33	43	43	43	43	43	43
			24	43	43	54	54	43	43	54	54	54	54	54	54
		550S162	16	33	33	33	43	33	33	33	43	33	33	33	43
			24	43	43	43	54	43	43	43	54	43	43	43	54
130	115	350S162	16	33	33	43	43	43	43	43	43	43	43	43	54
			24	43	54	54	54	54	54	54	54	54	54	54	68
		550S162	16	33	33	33	43	33	33	33	43	33	33	33	43
			24	43	43	43	54	43	43	43	54	43	43	43	54
< 140	120	350S162	16	43	43	43	43	43	43	43	43	43	43	54	54
			24	54	54	54	54	54	54	54	54	54	54	54	68
		550S162	16	33	33	33	43	33	33	33	43	33	33	33	43
			24	43	43	43	54	43	43	43	54	43	43	43	54
—	130	350S162	16	43	43	43	43	43	43	43	43	54	54	54	54
			24	54	54	54	54	54	54	54	54	54	54	54	68
		550S162	16	33	33	33	43	33	33	33	43	33	33	33	43
			24	43	43	43	54	43	43	43	54	43	43	43	54
—	< 140	350S162	16	43	43	43	54	43	43	54	54	54	54	54	54
			24	54	54	54	54	54	54	54	54	54	54	54	68
		550S162	16	33	33	33	43	33	33	33	43	33	33	43	43
			24	43	43	43	54	43	43	43	54	43	43	54	54

For SI: 1 inch = 25.4 mm, 1 foot = 304.8 mm, 1 mil = 0.0254 mm, 1 mile per hour = 0.447 m/s, 1 pound per square foot = 0.0479 kPa, 1 ksi = 1,000 psi = 6.895 MPa.

a. Deflection criterion: *L*/240.

b. Design load assumptions:
Second-floor dead load is 10 psf.
Second-floor live load is 30 psf.
Roof/ceiling dead load is 12 psf.
Attic live load is 10 psf.

c. Building width is in the direction of horizontal framing members supported by the wall studs.

d. Minimum Grade 33 ksi steel shall be used for 33 mil and 43 mil thicknesses. Minimum Grade 50 ksi steel shall be used for 54 and 68 mil thicknesses.

TABLE R603.3.2(11)
40-FOOT-WIDE BUILDING SUPPORTING ONE FLOOR, ROOF AND CEILING[a, b, c, d]

ULTIMATE WIND SPEED AND EXPOSURE CATEGORY (mph)		MEMBER SIZE	STUD SPACING (inches)	MINIMUM STUD THICKNESS (mils)											
				8-foot Studs				9-foot Studs				10-foot Studs			
				Ground Snow Load (psf)											
Exp. B	Exp. C			20	30	50	70	20	30	50	70	20	30	50	70
115	—	350S162	16	33	33	43	43	33	33	43	43	43	43	43	54
			24	43	43	54	54	43	43	54	54	54	54	54	68
		550S162	16	33	33	33	43	33	33	33	43	33	33	33	43
			24	43	43	54	54	43	43	43	54	43	43	43	54
120	—	350S162	16	33	33	43	43	33	33	43	43	43	43	43	54
			24	43	43	54	54	54	54	54	54	54	54	54	68
		550S162	16	33	33	33	43	33	33	33	43	33	33	33	43
			24	43	43	54	54	43	43	43	54	43	43	43	54
130	115	350S162	16	43	43	43	54	43	43	43	43	43	43	54	54
			24	54	54	54	54	54	54	54	54	54	54	54	68
		550S162	16	33	33	43	43	33	33	33	43	33	33	43	43
			24	43	43	54	54	43	43	43	54	43	43	54	54
< 140	120	350S162	16	43	43	43	54	43	43	43	54	43	43	54	54
			24	54	54	54	54	54	54	54	54	54	54	54	68
		550S162	16	33	33	43	43	33	33	33	43	33	33	43	43
			24	43	43	54	54	43	43	43	54	43	43	54	54
—	130	350S162	16	43	43	43	54	43	43	43	54	54	54	54	54
			24	54	54	54	68	54	54	54	54	54	54	68	68
		550S162	16	33	33	43	43	33	33	33	43	33	33	43	43
			24	43	43	54	54	43	43	43	54	43	43	54	54
—	< 140	350S162	16	43	43	43	54	43	43	54	54	54	54	54	54
			24	54	54	54	68	54	54	54	68	54	54	68	68
		550S162	16	33	33	43	43	33	33	43	43	33	43	43	43
			24	43	43	54	54	43	43	43	54	43	43	54	54

For SI: 1 inch = 25.4 mm, 1 foot = 304.8 mm, 1 mil = 0.0254 mm, 1 mile per hour = 0.447 m/s, 1 pound per square foot = 0.0479 kPa, 1 ksi = 1,000 psi = 6.895 MPa.

a. Deflection criterion: *L*/240.

b. Design load assumptions:
Second-floor dead load is 10 psf.
Second-floor live load is 30 psf.
Roof/ceiling dead load is 12 psf.
Attic live load is 10 psf.

c. Building width is in the direction of horizontal framing members supported by the wall studs.

d. Minimum Grade 33 ksi steel shall be used for 33 mil and 43 mil thicknesses. Minimum Grade 50 ksi steel shall be used for 54 and 68 mil thicknesses.

TABLE R603.3.2(12)
24-FOOT-WIDE BUILDING SUPPORTING TWO FLOORS, ROOF AND CEILING[a, b, c, d]

ULTIMATE WIND SPEED AND EXPOSURE CATEGORY (mph)		MEMBER SIZE	STUD SPACING (inches)	MINIMUM STUD THICKNESS (mils)											
				8-foot Studs				9-foot Studs				10-foot Studs			
				Ground Snow Load (psf)											
Exp. B	Exp. C			20	30	50	70	20	30	50	70	20	30	50	70
115	—	350S162	16	43	43	43	43	33	33	33	43	43	43	43	43
			24	54	54	54	54	54	54	54	54	54	54	54	54
		550S162	16	33	33	43	43	33	33	33	33	33	33	33	43
			24	43	43	54	54	43	43	43	43	43	43	43	54
120	—	350S162	16	43	43	43	43	33	33	43	43	43	43	43	43
			24	54	54	54	54	54	54	54	54	54	54	54	54
		550S162	16	33	33	43	43	33	33	33	33	33	33	33	43
			24	43	43	54	54	43	43	43	43	43	43	43	54
130	115	350S162	16	43	43	43	43	43	43	43	43	43	43	43	54
			24	54	54	54	54	54	54	54	54	54	54	54	54
		550S162	16	33	33	43	43	33	33	33	33	33	33	33	43
			24	43	43	54	54	43	43	43	43	43	43	43	54
< 140	120	350S162	16	43	43	43	43	43	43	43	43	43	43	54	54
			24	54	54	54	54	54	54	54	54	54	54	54	54
		550S162	16	33	33	43	43	33	33	33	33	33	33	33	43
			24	43	43	54	54	43	43	43	43	43	43	43	54
—	130	350S162	16	43	43	43	43	43	43	43	43	54	54	54	54
			24	54	54	54	54	54	54	54	54	54	54	68	68
		550S162	16	33	33	43	43	33	33	33	33	33	33	33	43
			24	43	43	54	54	43	43	43	43	43	43	43	54
—	< 140	350S162	16	43	43	43	43	43	43	54	54	54	54	54	54
			24	54	54	54	54	54	54	54	54	54	54	68	68
		550S162	16	33	33	43	43	33	33	33	33	33	33	43	43
			24	43	43	54	54	43	43	43	43	54	54	54	54

For SI: 1 inch = 25.4 mm, 1 foot = 304.8 mm, 1 mil = 0.0254 mm, 1 mile per hour = 0.447 m/s, 1 pound per square foot = 0.0479 kPa, 1 ksi = 1,000 psi = 6.895 MPa.

a. Deflection criterion: *L*/240.

b. Design load assumptions:
Top- and middle-floor dead load is 10 psf.
Top-floor live load is 30 psf.
Middle-floor live load is 40 psf.
Roof/ceiling dead load is 12 psf.
Attic live load is 10 psf.

c. Building width is in the direction of horizontal framing members supported by the wall studs.

d. Minimum Grade 33 ksi steel shall be used for 33 mil and 43 mil thicknesses. Minimum Grade 50 ksi steel shall be used for 54 and 68 mil thicknesses.

TABLE R603.3.2(13)
28-FOOT-WIDE BUILDING SUPPORTING TWO FLOORS, ROOF AND CEILING[a, b, c, d]

ULTIMATE WIND SPEED AND EXPOSURE CATEGORY (mph)		MEMBER SIZE	STUD SPACING (inches)	MINIMUM STUD THICKNESS (mils)											
				8-foot Studs				9-foot Studs				10-foot Studs			
				Ground Snow Load (psf)											
Exp. B	Exp. C			20	30	50	70	20	30	50	70	20	30	50	70
115	—	350S162	16	43	43	43	43	43	43	43	43	43	43	43	43
			24	54	54	54	54	54	54	54	54	54	54	54	54
		550S162	16	43	43	43	43	43	43	43	43	43	43	43	43
			24	54	54	54	54	54	54	54	54	54	54	54	54
120	—	350S162	16	43	43	43	43	43	43	43	43	43	43	43	43
			24	54	54	54	54	54	54	54	54	54	54	54	54
		550S162	16	43	43	43	43	43	43	43	43	43	43	43	43
			24	54	54	54	54	54	54	54	54	54	54	54	54
130	115	350S162	16	43	43	43	43	43	43	43	43	43	43	54	54
			24	54	54	54	54	54	54	54	54	54	54	54	68
		550S162	16	43	43	43	43	43	43	43	43	43	43	43	43
			24	54	54	54	54	54	54	54	54	54	54	54	54
< 140	120	350S162	16	43	43	43	43	43	43	43	43	54	54	54	54
			24	54	54	54	54	54	54	54	54	54	54	68	68
		550S162	16	43	43	43	43	43	43	43	43	43	43	43	43
			24	54	54	54	54	54	54	54	54	54	54	54	54
—	130	350S162	16	43	43	43	43	43	43	43	54	54	54	54	54
			24	54	54	54	54	54	54	54	54	68	68	68	68
		550S162	16	43	43	43	43	43	43	43	43	43	43	43	43
			24	54	54	54	54	54	54	54	54	54	54	54	54
—	< 140	350S162	16	43	43	43	54	54	54	54	54	54	54	54	54
			24	54	54	54	54	54	54	54	68	68	68	68	68
		550S162	16	43	43	43	43	43	43	43	43	43	43	43	43
			24	54	54	54	54	54	54	54	54	54	54	54	54

For SI: 1 inch = 25.4 mm, 1 foot = 304.8 mm, 1 mil = 0.0254 mm, 1 mile per hour = 0.447 m/s, 1 pound per square foot = 0.0479 kPa, 1 ksi = 1,000 psi = 6.895 MPa.

a. Deflection criterion: *L*/240.

b. Design load assumptions:

Top- and middle-floor dead load is 10 psf.

Top-floor live load is 30 psf.

Middle-floor live load is 40 psf.

Roof/ceiling dead load is 12 psf.

Attic live load is 10 psf.

c. Building width is in the direction of horizontal framing members supported by the wall studs.

d. Minimum Grade 33 ksi steel shall be used for 33 mil and 43 mil thicknesses. Minimum Grade 50 ksi steel shall be used for 54 and 68 mil thicknesses.

TABLE R603.3.2(14)
32-FOOT-WIDE BUILDING SUPPORTING TWO FLOORS, ROOF AND CEILING[a, b, c, d]

ULTIMATE WIND SPEED AND EXPOSURE CATEGORY (mph)		MEMBER SIZE	STUD SPACING (inches)	MINIMUM STUD THICKNESS (mils)											
				8-foot Studs				9-foot Studs				10-foot Studs			
				Ground Snow Load (psf)											
Exp. B	Exp. C			20	30	50	70	20	30	50	70	20	30	50	70
115	—	350S162	16	43	43	43	54	43	43	43	43	43	43	43	54
			24	54	54	54	68	54	54	54	54	54	54	54	68
		550S162	16	43	43	43	43	43	43	43	43	43	43	43	43
			24	54	54	54	54	54	54	54	54	54	54	54	54
120	—	350S162	16	43	43	43	54	43	43	43	43	43	43	43	54
			24	54	54	54	68	54	54	54	54	54	54	54	68
		550S162	16	43	43	43	43	43	43	43	43	43	43	43	43
			24	54	54	54	54	54	54	54	54	54	54	54	54
130	115	350S162	16	43	43	43	54	43	43	43	43	54	54	54	54
			24	54	54	54	68	54	54	54	54	54	68	68	68
		550S162	16	43	43	43	43	43	43	43	43	43	43	43	43
			24	54	54	54	54	54	54	54	54	54	54	54	54
< 140	120	350S162	16	43	43	43	54	43	43	43	54	54	54	54	54
			24	54	54	54	68	54	54	54	54	68	68	68	68
		550S162	16	43	43	43	43	43	43	43	43	43	43	43	43
			24	54	54	54	54	54	54	54	54	54	54	54	54
—	130	350S162	16	43	43	43	54	43	54	54	54	54	54	54	54
			24	54	54	54	68	54	54	54	68	68	68	68	68
		550S162	16	43	43	43	43	43	43	43	43	43	43	43	43
			24	54	54	54	54	54	54	54	54	54	54	54	54
—	< 140	350S162	16	43	43	54	54	54	54	54	54	54	54	54	54
			24	54	54	54	68	54	68	68	68	68	68	68	68
		550S162	16	43	43	43	43	43	43	43	43	43	43	43	43
			24	54	54	54	54	54	54	54	54	54	54	54	54

For SI: 1 inch = 25.4 mm, 1 foot = 304.8 mm, 1 mil = 0.0254 mm, 1 mile per hour = 0.447 m/s, 1 pound per square foot = 0.0479 kPa, 1 ksi = 1,000 psi = 6.895 MPa.

a. Deflection criterion: *L*/240.

b. Design load assumptions:

Top- and middle-floor dead load is 10 psf.

Top-floor live load is 30 psf.

Middle-floor live load is 40 psf.

Roof/ceiling dead load is 12 psf.

Attic live load is 10 psf.

c. Building width is in the direction of horizontal framing members supported by the wall studs.

d. Minimum Grade 33 ksi steel shall be used for 33 mil and 43 mil thicknesses. Minimum Grade 50 ksi steel shall be used for 54 and 68 mil thicknesses.

TABLE R603.3.2(15)
36-FOOT-WIDE BUILDING SUPPORTING TWO FLOORS, ROOF AND CEILING[a, b, c, d]

ULTIMATE WIND SPEED AND EXPOSURE CATEGORY (mph)		MEMBER SIZE	STUD SPACING (Inches)	MINIMUM STUD THICKNESS (mils)											
				8-foot Studs				9-foot Studs				10-foot Studs			
				Ground Snow Load (psf)											
Exp. B	Exp. C			20	30	50	70	20	30	50	70	20	30	50	70
115	—	350S162	16	54	54	54	54	43	43	43	54	54	54	54	54
			24	68	68	68	68	54	54	54	68	68	68	68	68
		550S162	16	43	43	43	54	43	43	43	43	43	43	43	43
			24	54	54	54	54	54	54	54	54	54	54	54	54
120	—	350S162	16	54	54	54	54	43	43	43	54	54	54	54	54
			24	68	68	68	68	54	54	54	68	68	68	68	68
		550S162	16	43	43	43	54	43	43	43	43	43	43	43	43
			24	54	54	54	54	54	54	54	54	54	54	54	54
130	115	350S162	16	54	54	54	54	43	43	43	54	54	54	54	54
			24	68	68	68	68	54	54	54	68	68	68	68	68
		550S162	16	43	43	43	54	43	43	43	43	43	43	43	43
			24	54	54	54	54	54	54	54	54	54	54	54	54
< 140	120	350S162	16	54	54	54	54	43	43	54	54	54	54	54	54
			24	68	68	68	68	54	54	54	68	68	68	68	68
		550S162	16	43	43	43	54	43	43	43	43	43	43	43	43
			24	54	54	54	54	54	54	54	54	54	54	54	54
—	130	350S162	16	54	54	54	54	54	54	54	54	54	54	54	54
			24	68	68	68	68	54	54	68	68	68	68	68	68
		550S162	16	43	43	43	54	43	43	43	43	43	43	43	43
			24	54	54	54	54	54	54	54	54	54	54	54	54
—	< 140	350S162	16	54	54	54	54	54	54	54	54	54	54	54	54
			24	68	68	68	68	68	68	68	68	68	68	68	68
		550S162	16	43	43	43	54	43	43	43	43	43	43	43	43
			24	54	54	54	54	54	54	54	54	54	54	54	54

For SI: 1 inch = 25.4 mm, 1 foot = 304.8 mm, 1 mil = 0.0254 mm, 1 mile per hour = 0.447 m/s, 1 pound per square foot = 0.0479 kPa, 1 ksi = 1,000 psi = 6.895 MPa.

a. Deflection criterion: *L*/240.

b. Design load assumptions:

Top- and middle-floor dead load is 10 psf.

Top-floor live load is 30 psf.

Middle-floor live load is 40 psf.

Roof/ceiling dead load is 12 psf.

Attic live load is 10 psf.

c. Building width is in the direction of horizontal framing members supported by the wall studs.

d. Minimum Grade 33 ksi steel shall be used for 33 mil and 43 mil thicknesses. Minimum Grade 50 ksi steel shall be used for 54 and 68 mil thicknesses.

TABLE R603.3.2(16)
40-FOOT-WIDE BUILDING SUPPORTING TWO FLOORS, ROOF AND CEILING[a, b, c, d]

ULTIMATE WIND SPEED AND EXPOSURE CATEGORY (mph)		MEMBER SIZE	STUD SPACING (Inches)	MINIMUM STUD THICKNESS (mils)											
				8-foot Studs				9-foot Studs				10-foot Studs			
				Ground Snow Load (psf)											
Exp. B	Exp. C			20	30	50	70	20	30	50	70	20	30	50	70
115	—	350S162	16	54	54	54	54	54	54	54	54	54	54	54	54
			24	68	68	68	68	68	68	68	68	68	68	68	68
		550S162	16	54	54	54	54	43	43	54	54	43	43	54	54
			24	54	54	54	68	54	54	54	54	54	54	54	54
120	—	350S162	16	54	54	54	54	54	54	54	54	54	54	54	54
			24	68	68	68	68	68	68	68	68	68	68	68	68
		550S162	16	54	54	54	54	43	43	54	54	43	43	54	54
			24	54	54	54	68	54	54	54	54	54	54	54	54
130	115	350S162	16	54	54	54	54	54	54	54	54	54	54	54	54
			24	68	68	68	68	68	68	68	68	68	68	68	68
		550S162	16	54	54	54	54	43	43	54	54	43	43	54	54
			24	54	54	54	68	54	54	54	54	54	54	54	54
< 140	120	350S162	16	54	54	54	54	54	54	54	54	54	54	54	54
			24	68	68	68	68	68	68	68	68	68	68	68	68
		550S162	16	54	54	54	54	43	43	54	54	43	43	54	54
			24	54	54	54	68	54	54	54	54	54	54	54	54
—	130	350S162	16	54	54	54	54	54	54	54	54	54	54	54	54
			24	68	68	68	68	68	68	68	68	68	68	68	68
		550S162	16	54	54	54	54	43	43	54	54	43	43	54	54
			24	54	54	54	68	54	54	54	54	54	54	54	54
—	< 140	350S162	16	54	54	54	54	54	54	54	54	54	54	54	54
			24	68	68	68	68	68	68	68	68	68	68	68	68
		550S162	16	54	54	54	54	43	43	54	54	43	43	54	54
			24	54	54	54	68	54	54	54	54	54	54	54	54

For SI: 1 inch = 25.4 mm, 1 foot = 304.8 mm, 1 mil = 0.0254 mm, 1 mile per hour = 0.447 m/s, 1 pound per square foot = 0.0479 kPa, 1 ksi = 1,000 psi = 6.895 MPa.

a. Deflection criterion: *L*/240.

b. Design load assumptions:

Top- and middle-floor dead load is 10 psf.

Top-floor live load is 30 psf.

Middle-floor live load is 40 psf.

Roof/ceiling dead load is 12 psf.

Attic live load is 10 psf.

c. Building width is in the direction of horizontal framing members supported by the wall studs.

d. Minimum Grade 33 ksi steel shall be used for 33 mil and 43 mil thicknesses. Minimum Grade 50 ksi steel shall be used for 54 and 68 mil thicknesses.

R603.3.3 Stud bracing. The flanges of cold-formed steel studs shall be laterally braced in accordance with one of the following:

1. Gypsum board on both sides, structural sheathing on both sides, or gypsum board on one side and structural sheathing on the other side of load-bearing walls with gypsum board installed with minimum No. 6 screws in accordance with Section R702 and structural sheathing installed in accordance with Section R603.9 and Table R603.3.2(1).
2. Horizontal steel straps fastened in accordance with Figure R603.3.3(1) on both sides at mid-height for 8-foot (2438 mm) walls, and at one-third points for 9-foot and 10-foot (2743 mm and 3048 mm) walls. Horizontal steel straps shall be not less than $1^1/_2$ inches in width and 33 mils in thickness (38 mm by 0.84 mm). Straps shall be attached to the flanges of studs with one No. 8 screw. In-line blocking shall be installed between studs at the termination of straps and at 12-foot (3658 mm) intervals along the strap. Straps shall be fastened to the blocking with two No. 8 screws.
3. Sheathing on one side and strapping on the other side fastened in accordance with Figure R603.3.3(2). Sheathing shall be installed in accordance with Item 1. Steel straps shall be installed in accordance with Item 2.

TABLE R603.3.2.1(1)
ALL BUILDING WIDTHS GABLE ENDWALLS 8, 9 OR 10 FEET IN HEIGHT[a, b, c, d]

ULTIMATE WIND SPEED AND EXPOSURE CATEGORY (mph)		MEMBER SIZE	STUD SPACING (Inches)	MINIMUM STUD THICKNESS (mils)		
Exp. B	Exp. C			8-foot Studs	9-foot Studs	10-foot Studs
115	—	350S162	16	33	33	33
			24	33	33	33
		550S162	16	33	33	33
			24	33	33	33
120	—	350S162	16	33	33	33
			24	33	33	43
		550S162	16	33	33	33
			24	33	33	33
130	115	350S162	16	33	33	33
			24	33	43	43
		550S162	16	33	33	33
			24	33	33	33
< 140	120	350S162	16	33	33	43
			24	33	43	54
		550S162	16	33	33	33
			24	33	33	33
—	130	350S162	16	33	33	43
			24	43	43	54
		550S162	16	33	33	33
			24	33	43	43
—	< 140	350S162	16	33	43	43
			24	43	54	54
		550S162	16	33	33	33
			24	43	43	43

For SI: 1 inch = 25.4 mm, 1 foot = 304.8 mm, 1 mil = 0.0254 mm, 1 mile per hour = 0.447 m/s, 1 pound per square foot = 0.0479 kPa, 1 ksi = 1,000 psi = 6.895 MPa.

a. Deflection criterion *L*/240.

b. Design load assumptions:
Ground snow load is 70 psf.
Roof/ceiling dead load is 12 psf.
Floor dead load is 10 psf.
Floor live load is 40 psf.
Attic dead load is 10 psf.

c. Building width is in the direction of horizontal framing members supported by the wall studs.

d. Minimum Grade 33 ksi steel shall be used for 33 mil and 43 mil thicknesses. Minimum Grade 50 ksi steel shall be used for 54 and 68 mil thicknesses.

TABLE R603.3.2.1(2)
ALL BUILDING WIDTHS GABLE ENDWALLS OVER 10 FEET IN HEIGHT[a, b, c, d]

ULTIMATE WIND SPEED AND EXPOSURE CATEGORY (mph)		MEMBER SIZE	STUD SPACING (inches)	MINIMUM STUD THICKNESS (mils)					
				Stud Height, *h* (feet)					
Exp. B	Exp. C			$10 < h \leq 12$	$12 < h \leq 14$	$14 < h \leq 16$	$16 < h \leq 18$	$18 < h \leq 20$	$20 < h \leq 22$
115	—	350S162	16	33	43	68	97	—	—
			24	43	68	—	—	—	—
		550S162	16	33	33	33	43	43	54
			24	33	43	43	54	68	97
120	—	350S162	16	43	54	97	—	—	—
			24	54	97	—	—	—	—
		550S162	16	33	33	43	43	54	68
			24	33	43	54	54	68	97
130	115	350S162	16	43	54	97	—	—	—
			24	54	97	—	—	—	—
		550S162	16	33	33	43	54	54	97
			24	43	43	54	68	97	97
< 140	120	350S162	16	43	68	—	—	—	—
			24	68	—	—	—	—	—
		550S162	16	33	43	43	54	68	97
			24	43	54	54	68	97	—
—	130	350S162	16	54	97	—	—	—	—
			24	97	—	—	—	—	—
		550S162	16	33	43	54	68	97	—
			24	43	54	54	97	—	—
—	< 140	350S162	16	54	97	—	—	—	—
			24	97	—	—	—	—	—
		550S162	16	43	43	54	97	97	—
			24	54	54	68	—	—	—

For SI: 1 inch = 25.4 mm, 1 foot = 304.8 mm, 1 mil = 0.0254 mm, 1 mile per hour = 0.447 m/s, 1 pound per square foot = 0.0479 kPa, 1 ksi = 1,000 psi = 6.895 MPa.

a. Deflection criterion *L*/240.

b. Design load assumptions:
Ground snow load is 70 psf.
Roof/ceiling dead load is 12 psf.
Floor dead load is 10 psf.
Floor live load is 40 psf.
Attic dead load is 10 psf.

c. Building width is in the direction of horizontal framing members supported by the wall studs.

d. Minimum Grade 33 ksi steel shall be used for 33 mil and 43 mil thicknesses. Minimum Grade 50 ksi steel shall be used for 54 and 68 mil thicknesses.

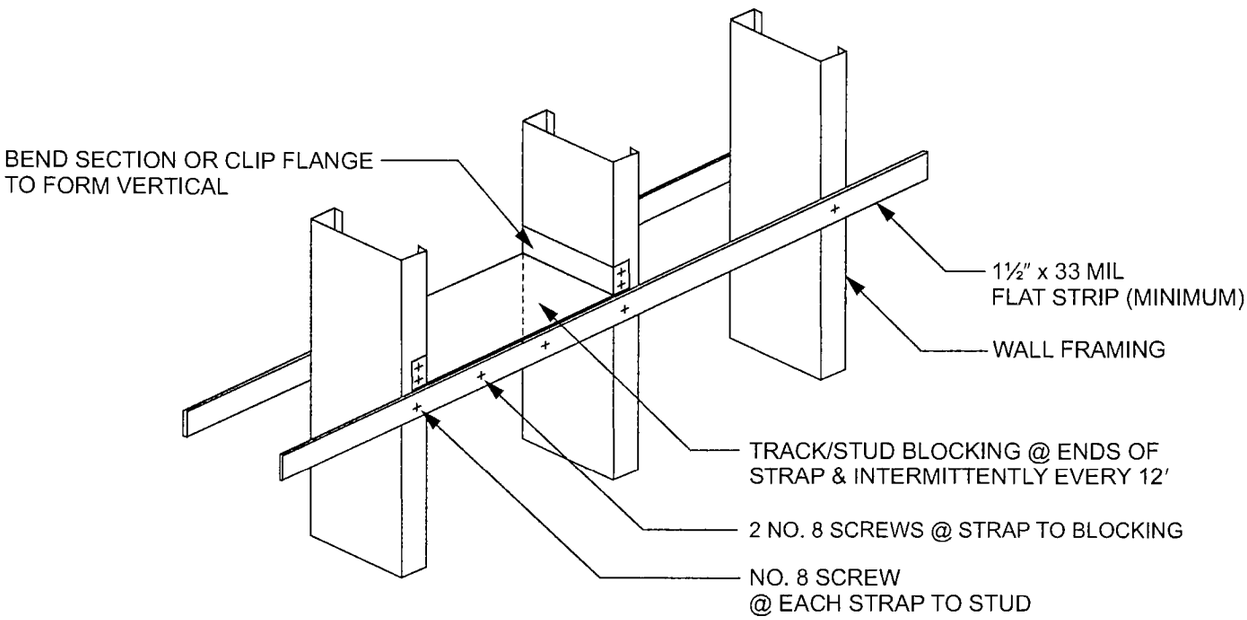

For SI: 1 mil = 0.0254 mm, 1 inch = 25.4 mm, 1 foot = 304.8 mm.

FIGURE R603.3.3(1)
STUD BRACING WITH STRAPPING ONLY

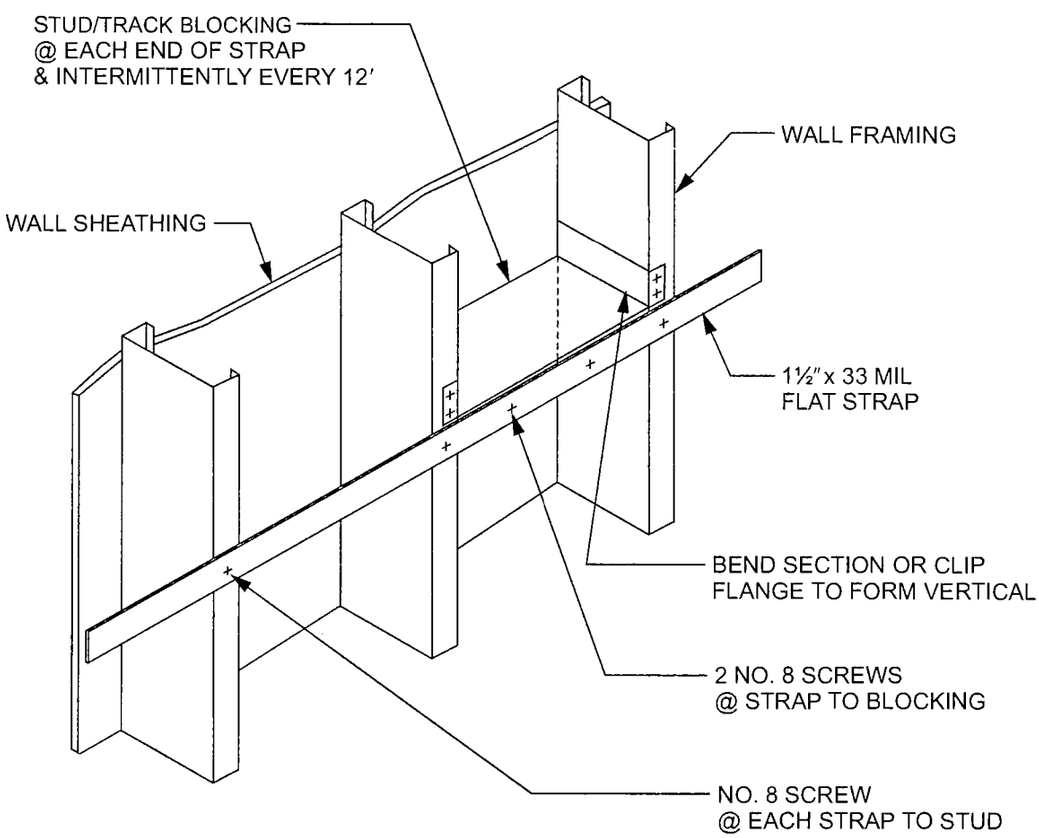

For SI: 1 mil = 0.0254 mm, 1 inch = 25.4 mm, 1 foot = 304.8 mm.

FIGURE R603.3.3(2)
STUD BRACING WITH STRAPPING AND SHEATHING MATERIAL

R603.3.4 Cutting and notching. Flanges and lips of cold-formed steel studs and headers shall not be cut or notched.

R603.3.5 Splicing. Steel studs and other structural members shall not be spliced without an approved design. Tracks shall be spliced in accordance with Figure R603.3.5.

R603.4 Corner framing. In exterior walls, corner studs and the top tracks shall be installed in accordance with Figure R603.4.

R603.5 Exterior wall covering. The method of attachment of exterior wall covering materials to cold-formed steel stud wall framing shall conform to the manufacturer's installation instructions.

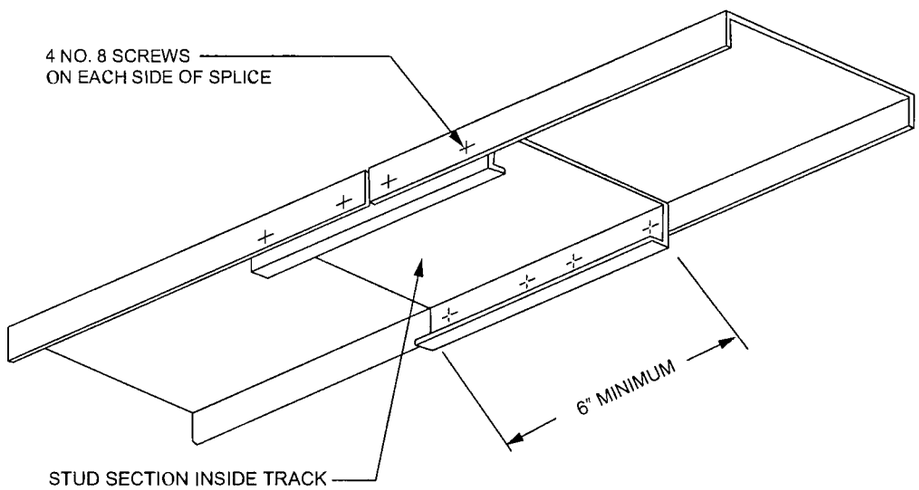

For SI: 1 inch = 25.4 mm.

FIGURE R603.3.5
TRACK SPLICE

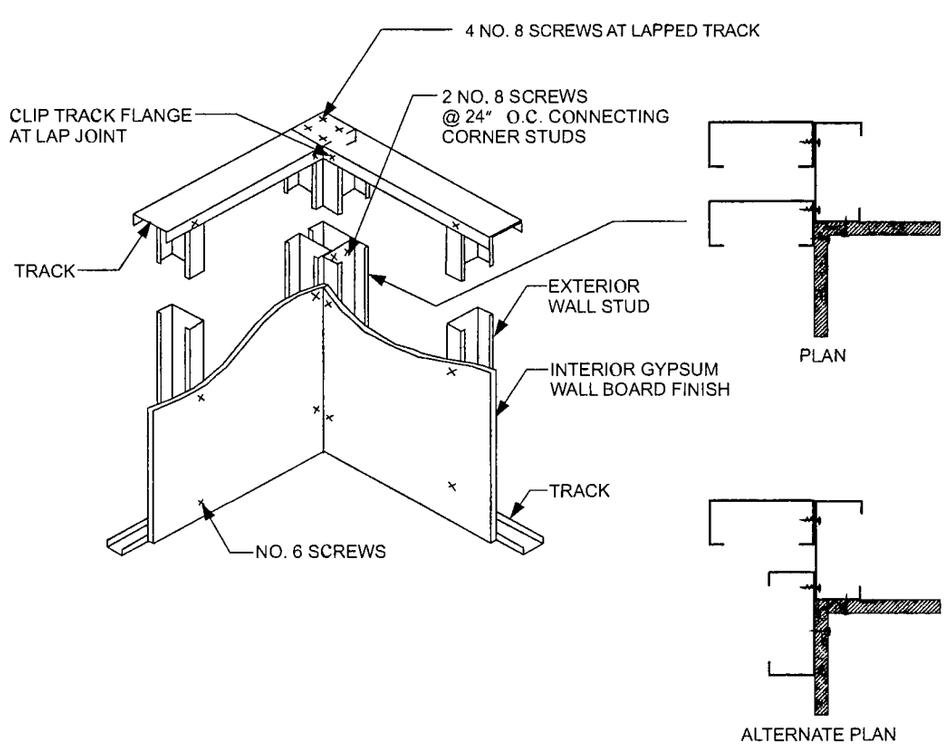

For SI: 1 inch = 25.4 mm.

FIGURE R603.4
CORNER FRAMING

R603.6 Headers. Headers shall be installed above all wall openings in exterior walls and interior load-bearing walls. Box beam headers and back-to-back headers each shall be formed from two equal sized C-shaped members in accordance with Figures R603.6(1) and R603.6(2), respectively, and Tables R603.6(1) through R603.6(6). L-shaped headers shall be permitted to be constructed in accordance with AISI S230. Alternately, headers shall be permitted to be designed and constructed in accordance with AISI S240.

R603.6.1 Headers in gable endwalls. Box beam and back-to-back headers in gable endwalls shall be permitted to be constructed in accordance with Section R603.6 or with the header directly above the opening in accordance with Figures R603.6.1(1) and R603.6.1(2) and the following provisions:

1. Two 362S162-33 for openings less than or equal to 4 feet (1219 mm).
2. Two 600S162-43 for openings greater than 4 feet (1219 mm) but less than or equal to 6 feet (1829 mm).
3. Two 800S162-54 for openings greater than 6 feet (1829 mm) but less than or equal to 9 feet (2743 mm).

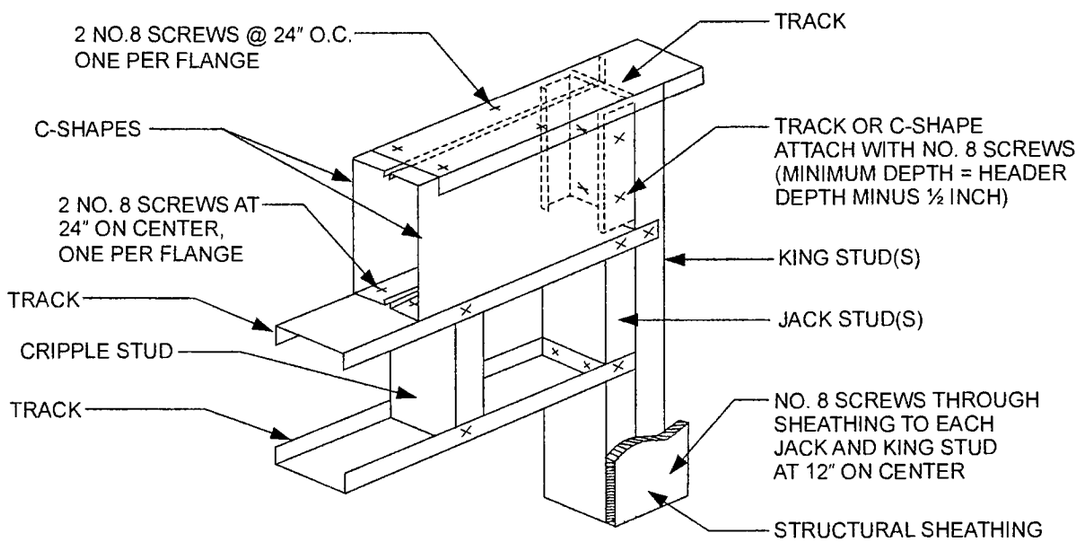

For SI: 1 inch = 25.4 mm.

FIGURE R603.6(1)
BOX BEAM HEADER

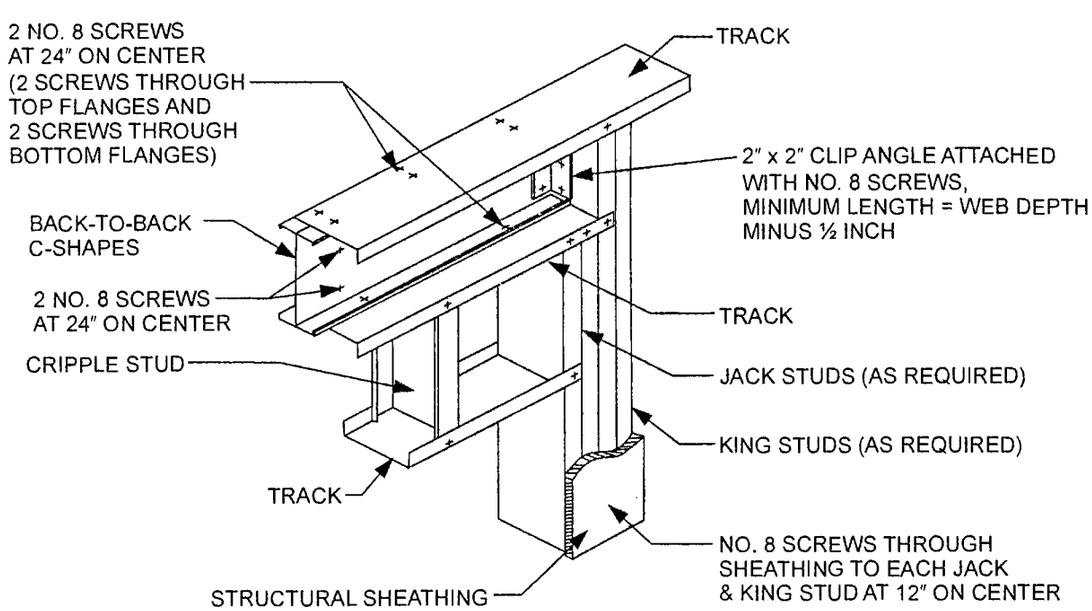

For SI: 1 inch = 25.4 mm.

FIGURE R603.6(2)
BACK-TO-BACK HEADER

TABLE R603.6(1)
BOX-BEAM AND BACK-TO-BACK HEADER SPANS
Headers Supporting Roof and Ceiling Only[a, b, d]

MEMBER DESIGNATION	GROUND SNOW LOAD (20 psf)					GROUND SNOW LOAD (30 psf)				
	Building width[c] (feet)					Building width[c] (feet)				
	24	28	32	36	40	24	28	32	36	40
2-350S162-33	3′-3″	2′-8″	2′-2″	—	—	2′-8″	2′-2″	—	—	—
2-350S162-43	4′-2″	3′-9″	3′-4″	2′-11″	2′-7″	3′-9″	3′-4″	2′-11″	2′-7″	2′-2″
2-350S162-54	6′-2″	5′-10″	5′-8″	5′-3″	4′-10″	5′-11″	5′-8″	5′-2″	4′-10″	4′-6″
2-350S162-68	6′-7″	6′-3″	6′-0″	5′-10″	5′-8″	6′-4″	6′-1″	5′-10″	5′-8″	5′-6″
2-550S162-33	4′-8″	4′-0″	3′-6″	3′-0″	2′-6″	4′-1″	3′-6″	3′-0″	2′-6″	—
2-550S162-43	6′-0″	5′-4″	4′-10″	4′-4″	3′-11″	5′-5″	4′-10″	4′-4″	3′-10″	3′-5″
2-550S162-54	8′-9″	8′-5″	8′-1″	7′-9″	7′-3″	8′-6″	8′-1″	7′-8″	7′-2″	6′-8″
2-550S162-68	9′-5″	9′-0″	8′-8″	8′-4″	8′-1″	9′-1″	8′-8″	8′-4″	8′-1″	7′-10″
2-800S162-33	4′-5″	3′-11″	3′-5″	3′-1″	2′-10″	3′-11″	3′-6″	3′-1″	2′-9″	2′-3″
2-800S162-43	7′-3″	6′-7″	5′-11″	5′-4″	4′-10″	6′-7″	5′-11″	5′-4″	4′-9″	4′-3″
2-800S162-54	10′-10″	10′-2″	9′-7″	9′-0″	8′-5″	10′-2″	9′-7″	8′-11″	8′-4″	7′-9″
2-800S162-68	12′-8″	11′-10″	11′-2″	10′-7″	10′-1″	11′-11″	11′-2″	10′-7″	10′-0″	9′-6″
2-1000S162-43	7′-10″	6′-10″	6′-1″	5′-6″	5′-0″	6′-11″	6′-1″	5′-5″	4′-11″	4′-6″
2-1000S162-54	12′-3″	11′-5″	10′-9″	10′-2″	9′-6″	11′-6″	10′-9″	10′-1″	9′-5″	8′-9″
2-1000S162-68	14′-5″	13′-5″	12′-8″	12′-0″	11′-6″	13′-6″	12′-8″	12′-0″	11′-5″	10′-10″
2-1200S162-54	12′-11″	11′-3″	10′-0″	9′-0″	8′-2″	11′-5″	10′-0″	9′-0″	8′-1″	7′-4″
2-1200S162-68	15′-11″	14′-10″	14′-0″	13′-4″	12′-8″	15′-0″	14′-0″	13′-3″	12′-7″	11′-11″

For SI: 1 mil = 0.0254 mm, 1 inch = 25.4 mm, 1 foot = 304.8 mm, 1 pound per square foot = 0.0479 kPa, 1 pound per square inch = 6.895 kPa, 1 ksi = 1,000 psi = 6.895 MPa.

a. Deflection criteria: *L*/360 for live loads, *L*/240 for total loads.

b. Design load assumptions:
Roof/ceiling dead load is 12 psf.
Attic dead load is 10 psf.

c. Building width is in the direction of horizontal framing members supported by the header.

d. Minimum Grade 33 ksi steel shall be used for 33 mil and 43 mil thicknesses. Minimum Grade 50 ksi steel shall be used for 54 and 68 mil thicknesses.

TABLE R603.6(2)
BOX-BEAM AND BACK-TO-BACK HEADER SPANS
Headers Supporting Roof and Ceiling Only[a, b, d]

MEMBER DESIGNATION	GROUND SNOW LOAD (50 psf)					GROUND SNOW LOAD (70 psf)				
	Building width[c] (feet)					Building width[c] (feet)				
	24	28	32	36	40	24	28	32	36	40
2-350S162-33	—	—	—	—	—	—	—	—	—	—
2-350S162-43	2′-4″	—	—	—	—	—	—	—	—	—
2-350S162-54	4′-8″	4′-2″	3′-9″	3′-5″	3′-1″	3′-7″	3′-2″	2′-9″	2′-5″	2′-0″
2-350S162-68	5′-7″	5′-2″	4′-9″	4′-4″	3′-11″	4′-7″	4′-1″	3′-7″	3′-2″	2′-10″
2-550S162-33	2′-2″	—	—	—	—	—	—	—	—	—
2-550S162-43	3′-8″	3′-1″	2′-6″	—	—	2′-3″	—	—	—	—
2-550S162-54	6′-11″	6′-3″	5′-9″	5′-3″	4′-9″	5′-6″	4′-11″	4′-5″	3′-11″	3′-5″
2-550S162-68	8′-0″	7′-6″	6′-11″	6′-5″	5′-11″	6′-9″	6′-1″	5′-6″	5′-0″	4′-7″
2-800S162-33	2′-7″	—	—	—	—	—	—	—	—	—
2-800S162-43	4′-6″	3′-9″	3′-1″	2′-5″	—	2′-10″	—	—	—	—
2-800S162-54	8′-0″	7′-3″	6′-8″	6′-1″	5′-7″	6′-5″	5′-9″	5′-1″	4′-7″	4′-0″
2-800S162-68	9′-9″	9′-0″	8′-3″	7′-8″	7′-1″	8′-0″	7′-3″	6′-7″	6′-0″	5′-6″
2-1000S162-43	4′-8″	4′-1″	3′-6″	2′-9″	—	3′-3″	2′-2″	—	—	—
2-1000S162-54	9′-1″	8′-2″	7′-3″	6′-7″	6′-0″	7′-0″	6′-2″	5′-6″	5′-0″	4′-6″
2-1000S162-68	11′-1″	10′-2″	9′-5″	8′-8″	8′-1″	9′-1″	8′-3″	7′-6″	6′-10″	6′-3″
2-1200S162-54	7′-8″	6′-9″	6′-1″	5′-6″	5′-0″	5′-10″	5′-1″	4′-7″	4′-1″	3′-9″
2-1200S162-68	12′-3″	11′-3″	10′-4″	9′-7″	8′-11″	10′-1″	9′-1″	8′-3″	7′-6″	6′-10″

For SI: 1 mil = 0.0254 mm, 1 inch = 25.4 mm, 1 foot = 304.8 mm, 1 pound per square foot = 0.0479 kPa, 1 pound per square inch = 6.895 kPa, 1 ksi = 1,000 psi = 6.895 MPa.

a. Deflection criteria: *L*/360 for live loads, *L*/240 for total loads.

b. Design load assumptions:
Roof/ceiling dead load is 12 psf.
Attic dead load is 10 psf.

c. Building width is in the direction of horizontal framing members supported by the header.

d. Minimum Grade 33 ksi steel shall be used for 33 mil and 43 mil thicknesses. Minimum Grade 50 ksi steel shall be used for 54 and 68 mil thicknesses.

TABLE R603.6(3)
BOX-BEAM AND BACK-TO-BACK HEADER SPANS
Headers Supporting One Floor, Roof and Ceiling[a, b, d]

MEMBER DESIGNATION	GROUND SNOW LOAD (20 psf)					GROUND SNOW LOAD (30 psf)				
	Building width[c] (feet)					Building width[c] (feet)				
	24	28	32	36	40	24	28	32	36	40
2-350S162-33	—	—	—	—	—	—	—	—	—	—
2-350S162-43	2′-2″	—	—	—	—	2′-1″	—	—	—	—
2-350S162-54	4′-4″	3′-10″	3′-5″	3′-1″	2′-9″	4′-3″	2′-9″	3′-4″	3′-0″	2′-8″
2-350S162-68	5′-0″	4′-9″	4′-7″	4′-2″	3′-9″	4′-11″	4′-8″	4′-6″	4′-1″	3′-9″
2-550S162-33	—	—	—	—	—	—	—	—	—	—
2-550S162-43	3′-5″	2′-9″	2′-1″	—	—	3′-3″	2′-7″	—	—	—
2-550S162-54	6′-6″	5′-10″	5′-3″	4′-9″	4′-4″	6′-4″	5′-9″	5′-2″	4′-8″	4′-3″
2-550S162-68	7′-2″	6′-10″	6′-5″	5′-11″	5′-6″	7′-0″	6′-9″	6′-4″	5′-10″	5′-4″
2-800S162-33	2′-1″	—	—	—	—	—	—	—	—	—
2-800S162-43	4′-2″	3′-4″	2′-7″	—	—	4′-0″	3′-3″	2′-5″	—	—
2-800S162-54	7′-6″	6′-9″	6′-2″	5′-7″	5′-0″	7′-5″	6′-8″	6′-0″	5′-5″	4′-11″
2-800S162-68	9′-3″	8′-5″	7′-8″	7′-1″	6′-6″	9′-1″	8′-3″	7′-7″	7′-0″	6′-5″
2-1000S162-43	4′-4″	3′-9″	2′-11″	—	—	4′-3″	3′-8″	2′-9″	—	—
2-1000S162-54	8′-6″	7′-6″	6′-8″	6′-0″	5′-5″	8′-4″	7′-4″	6′-6″	5′-10″	5′-4″
2-1000S162-68	10′-6″	9′-7″	8′-9″	8′-0″	7′-5″	10′-4″	9′-5″	8′-7″	7′-11″	7′-3″
2-1200S162-54	7′-1″	6′-2″	5′-6″	5′-0″	4′-6″	6′-11″	6′-1″	5′-5″	4′-10″	4′-5″
2-1200S162-68	11′-7″	10′-7″	9′-8″	8′-11″	8′-2″	11′-5″	10′-5″	9′-6″	8′-9″	8′-0″

For SI: 1 inch = 25.4 mm, 1 foot = 304.8 mm, 1 pound per square foot = 0.0479 kPa, 1 pound per square inch = 6.895 kPa.

a. Deflection criteria: *L*/360 for live loads, *L*/240 for total loads.

b. Design load assumptions:
Second-floor dead load is 10 psf.
Roof/ceiling dead load is 12 psf.
Second-floor live load is 30 psf.
Attic dead load is 10 psf.

c. Building width is in the direction of horizontal framing members supported by the header.

d. Minimum Grade 33 ksi steel shall be used for 33 mil and 43 mil thicknesses. Minimum Grade 50 ksi steel shall be used for 54 and 68 mil thicknesses.

TABLE R603.6(4)
BOX-BEAM AND BACK-TO-BACK HEADER SPANS
Headers Supporting One Floor, Roof and Ceiling[a, b, d]

MEMBER DESIGNATION	GROUND SNOW LOAD (50 psf)					GROUND SNOW LOAD (70 psf)				
	Building width[c] (feet)					Building width[c] (feet)				
	24	28	32	36	40	24	28	32	36	40
2-350S162-33	—	—	—	—	—	—	—	—	—	—
2-350S162-43	—	—	—	—	—	—	—	—	—	—
2-350S162-54	3′-5″	3′-0″	2′-7″	2′-2″	—	2′-8″	2′-2″	—	—	—
2-350S162-68	4′-6″	4′-1″	3′-8″	3′-3″	2′-11″	3′-9″	3′-3″	2′-10″	2′-5″	2′-1″
2-550S162-33	—	—	—	—	—	—	—	—	—	—
2-550S162-43	2′-0″	—	—	—	—	—	—	—	—	—
2-550S162-54	5′-3″	3′-8″	4′-1″	3′-8″	3′-2″	4′-3″	3′-8″	3′-1″	2′-7″	2′-0″
2-550S162-68	6′-5″	5′-10″	5′-3″	4′-9″	4′-4″	5′-5″	4′-9″	4′-3″	3′-9″	3′-4″
2-800S162-33	—	—	—	—	—	—	—	—	—	—
2-800S162-43	2′-6″	—	—	—	—	—	—	—	—	—
2-800S162-54	6′-1″	5′-5″	4′-10″	4′-3″	3′-9″	4′-11″	4′-3″	3′-8″	3′-0″	2′-5″
2-800S162-68	7′-8″	6′-11″	6′-3″	5′-9″	5′-2″	6′-5″	5′-9″	5′-1″	4′-6″	4′-0″
2-1000S162-43	2′-10″	—	—	—	—	—	—	—	—	—
2-1000S162-54	6′-7″	5′-10″	5′-3″	4′-9″	4′-3″	5′-4″	4′-9″	4′-1″	3′-5″	2′-9″
2-1000S162-68	8′-8″	7′-10″	7′-2″	6′-6″	5′-11″	7′-4″	6′-6″	5′-9″	5′-1″	4′-6″
2-1200S162-54	5′-6″	4′-10″	4′-4″	3′-11″	3′-7″	4′-5″	3′-11″	3′-6″	3′-2″	2′-11″
2-1200S162-68	9′-7″	8′-8″	7′-11″	7′-2″	6′-6″	8′-1″	7′-2″	6′-4″	5′-8″	5′-0″

For SI: 1 mil = 0.0254 mm, 1 inch = 25.4 mm, 1 foot = 304.8 mm, 1 pound per square foot = 0.0479 kPa, 1 pound per square inch = 6.895 kPa, 1 ksi = 1,000 psi = 6.895 MPa.

a. Deflection criteria: *L*/360 for live loads, *L*/240 for total loads.

b. Design load assumptions:
Second-floor dead load is 10 psf.
Roof/ceiling dead load is 12 psf.
Second-floor live load is 30 psf.
Attic dead load is 10 psf.

c. Building width is in the direction of horizontal framing members supported by the header.

d. Minimum Grade 33 ksi steel shall be used for 33 mil and 43 mil thicknesses. Minimum Grade 50 ksi steel shall be used for 54 and 68 mil thicknesses.

TABLE R603.6(5)
BOX-BEAM AND BACK-TO-BACK HEADER SPANS
Headers Supporting Two Floors, Roof and Ceiling[a, b, d]

MEMBER DESIGNATION	GROUND SNOW LOAD (20 psf)					GROUND SNOW LOAD (30 psf)				
	Building width[c] (feet)					Building width[c] (feet)				
	24	28	32	36	40	24	28	32	36	40
2-350S162-33	—	—	—	—	—	—	—	—	—	—
2-350S162-43	—	—	—	—	—	—	—	—	—	—
2-350S162-54	2′-5″	—	—	—	—	2′-4″	—	—	—	—
2-350S162-68	3′-6″	3′-0″	2′-6″	2′-1″	—	3′-5″	2′-11″	2′-6″	2′-0″	—
2-550S162-33	—	—	—	—	—	—	—	—	—	—
2-550S162-43	—	—	—	—	—	—	—	—	—	—
2-550S162-54	3′-11″	3′-3″	2′-8″	2′-0″	—	3′-10″	3′-3″	2′-7″	—	—
2-550S162-68	5′-1″	4′-5″	3′-10″	3′-3″	2′-9″	5′-0″	4′-4″	3′-9″	3′-3″	2′-9″
2-800S162-33	—	—	—	—	—	—	—	—	—	—
2-800S162-43	—	—	—	—	—	—	—	—	—	—
2-800S162-54	4′-7″	3′-10″	3′-1″	2′-5″	—	4′-6″	3′-9″	3′-0″	2′-4″	—
2-800S162-68	6′-0″	5′-3″	4′-7″	3′-11″	3′-4″	6′-0″	5′-2″	4′-6″	3′-11″	3′-3″
2-1000S162-43	—	—	—	—	—	—	—	—	—	—
2-1000S162-54	5′-0″	4′-4″	3′-6″	2′-9″	—	4′-11″	4′-3″	3′-5″	2′-7″	—
2-1000S162-68	6′-10″	6′-0″	5′-3″	4′-6″	3′-10″	6′-9″	5′-11″	5′-2″	4′-5″	3′-9″
2-1200S162-54	4′-2″	3′-7″	3′-3″	2′-11″	—	4′-1″	3′-7″	3′-2″	2′-10″	—
2-1200S162-68	7′-7″	6′-7″	5′-9″	5′-0″	4′-2″	7′-6″	6′-6″	5′-8″	4′-10″	4′-1″

For SI: 1 mil = 0.0254 mm, 1 inch = 25.4 mm, 1 foot = 304.8 mm, 1 pound per square foot = 0.0479 kPa, 1 pound per square inch = 6.895 kPa, 1 ksi = 1,000 psi = 6.895 MPa.

a. Deflection criteria: *L*/360 for live loads, *L*/240 for total loads.

b. Design load assumptions:
Second-floor dead load is 10 psf.
Roof/ceiling dead load is 12 psf.
Second-floor live load is 40 psf
Third-floor live load is 30 psf.
Attic live load is 10 psf.

c. Building width is in the direction of horizontal framing members supported by the header.

d. Minimum Grade 33 ksi steel shall be used for 33 mil and 43 mil thicknesses. Minimum Grade 50 ksi steel shall be used for 54 and 68 mil thicknesses.

TABLE R603.6(6)
BOX-BEAM AND BACK-TO-BACK HEADER SPANS
Headers Supporting Two Floors, Roof and Ceiling[a, b, d]

MEMBER DESIGNATION	GROUND SNOW LOAD (50 psf)					GROUND SNOW LOAD (70 psf)				
	Building width[c] (feet)					Building width[c] (feet)				
	24	28	32	36	40	24	28	32	36	40
2-350S162-33	—	—	—	—	—	—	—	—	—	—
2-350S162-43	—	—	—	—	—	—	—	—	—	—
2-350S162-54	2′-2″	—	—	—	—	—	—	—	—	—
2-350S162-68	3′-3″	2′-9″	2′-3″	—	—	2′-11″	2′-5″	—	—	—
2-550S162-33	—	—	—	—	—	—	—	—	—	—
2-550S162-43	—	—	—	—	—	—	—	—	—	—
2-550S162-54	3′-7″	2′-11″	2′-3″	—	—	3′-3″	2′-7″	—	—	—
2-550S162-68	4′-9″	2′-1″	3′-6″	3′-0″	2′-5″	4′-4″	3′-9″	3′-2″	2′-8″	2′-1″
2-800S162-33	—	—	—	—	—	—	—	—	—	—
2-800S162-43	—	—	—	—	—	—	—	—	—	—
2-800S162-54	4′-3″	3′-5″	2′-8″	—	—	3′-9″	3′-0″	2′-3″	—	—
2-800S162-68	5′-8″	4′-11″	4′-2″	3′-7″	2′-11″	5′-3″	4′-6″	3′-10″	3′-3″	2′-7″
2-1000S162-43	—	—	—	—	—	—	—	—	—	—
2-1000S162-54	4′-8″	3′-11″	3′-1″	2′-2″	—	4′-3″	3′-5″	2′-7″	—	—
2-1000S162-68	6′-5″	5′-7″	4′-9″	4′-1″	3′-4″	5′-11″	5′-1″	4′-5″	3′-8″	2′-11″
2-1200S162-54	3′-11″	3′-5″	3′-0″	2′-4″	—	3′-7″	3′-2″	2′-10″	—	—
2-1200S162-68	7′-1″	6′-2″	5′-3″	4′-6″	3′-8″	6′-6″	5′-8″	4′-10″	4′-0″	3′-3″

For SI: 1 mil = 0.0254 mm, 1 inch = 25.4 mm, 1 foot = 304.8 mm, 1 pound per square foot = 0.0479 kPa, 1 pound per square inch = 6.895 kPa, 1 ksi = 1,000 psi = 6.895 MPa.

a. Deflection criteria: *L*/360 for live loads, *L*/240 for total loads.

b. Design load assumptions:
Second-floor dead load is 10 psf.
Roof/ceiling dead load is 12 psf.
Second-floor live load is 40 psf
Third-floor live load is 30 psf.
Attic live load is 10 psf.

c. Building width is in the direction of horizontal framing members supported by the header.

d. Minimum Grade 33 ksi steel shall be used for 33 mil and 43 mil thicknesses. Minimum Grade 50 ksi steel shall be used for 54 and 68 mil thicknesses.

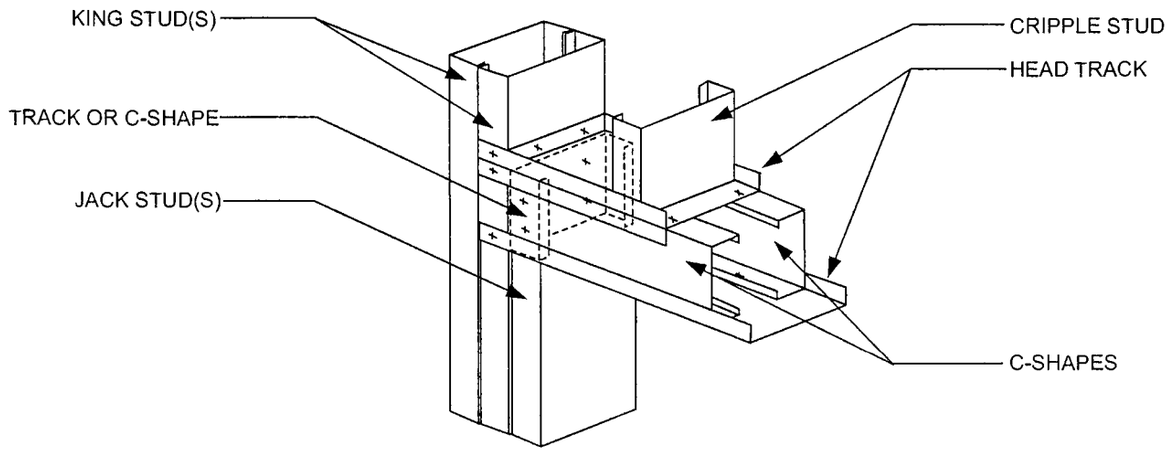

FIGURE R603.6.1(1)
BOX BEAM HEADER IN GABLE ENDWALL

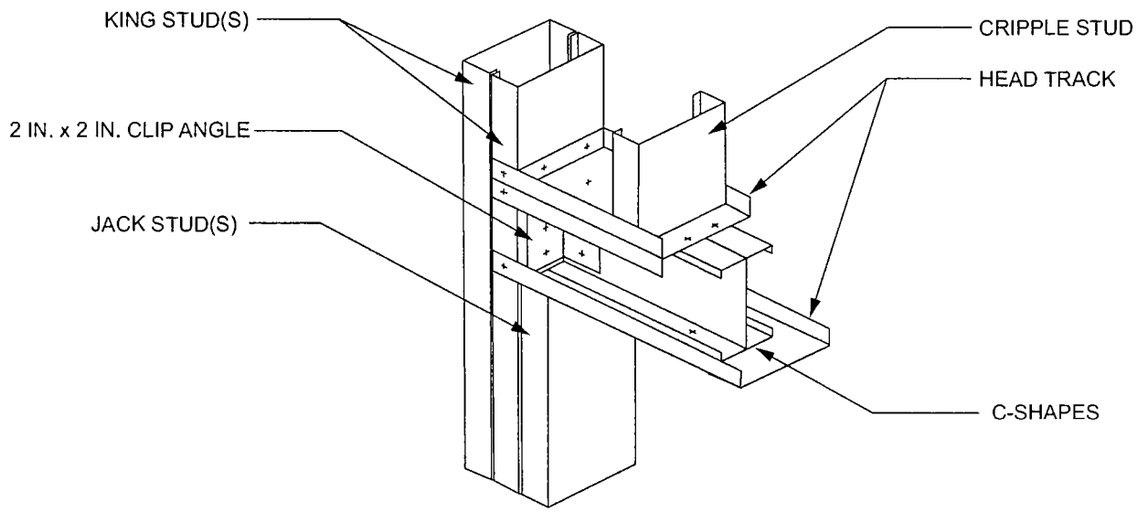

For SI: 1 inch = 25.4 mm.

FIGURE R603.6.1(2)
BACK-TO-BACK HEADER IN GABLE ENDWALL

R603.7 Jack and king studs. The number of jack and king studs installed on each side of a header shall comply with Table R603.7(1). King, jack and cripple studs shall be of the same dimension and thickness as the adjacent wall studs. Headers shall be connected to king studs in accordance with Table R603.7(2) and the following provisions:

1. For box beam headers, one-half of the total number of required screws shall be applied to the header and one-half to the king stud by use of C-shaped or track member in accordance with Figure R603.6(1). The track or C-shaped sections shall extend the depth of the header minus $^1/_2$ inch (12.7 mm) and shall have a minimum thickness not less than that of the wall studs.
2. For back-to-back headers, one-half the total number of screws shall be applied to the header and one-half to the king stud by use of a minimum 2-inch by 2-inch (51 mm by 51 mm) clip angle in accordance with Figure R603.6(2). The clip angle shall extend the depth of the header minus $^1/_2$ inch (12.7 mm) and shall have a minimum thickness not less than that of the wall studs. Jack and king studs shall be interconnected with structural sheathing in accordance with Figures R603.6(1) and R603.6(2).

R603.8 Head and sill track. Head track spans above door and window openings and sill track spans beneath window openings shall comply with Table R603.8. For openings less than 4 feet (1219 mm) in height that have both a head track and a sill track, multiplying the spans by 1.75 shall be permitted in Table R603.8. For openings less than or equal to 6 feet (1829 mm) in height that have both a head track and a sill track, multiplying the spans in Table R603.8 by 1.50 shall be permitted.

R603.9 Structural sheathing. Structural sheathing shall be installed in accordance with Figure R603.9 and this section on all sheathable exterior wall surfaces, including areas above and below openings.

TABLE R603.7(1)
TOTAL NUMBER OF JACK AND KING STUDS REQUIRED AT EACH END OF AN OPENING

SIZE OF OPENING (feet-inches)	24-INCH O.C. STUD SPACING		16-INCH O.C. STUD SPACING	
	No. of jack studs	No. of king studs	No. of jack studs	No. of king studs
Up to 3′-6″	1	1	1	1
> 3′-6″ to 5′-0″	1	2	1	2
> 5′-0″ to 5′-6″	1	2	2	2
> 5′-6″ to 8′-0″	1	2	2	2
> 8′-0″ to 10′-6″	2	2	2	3
> 10′-6″ to 12′-0″	2	2	3	3
> 12′-0″ to 13′-0″	2	3	3	3
> 13′-0″ to 14′-0″	2	3	3	4
> 14′-0″ to 16′-0″	2	3	3	4
> 16′-0″ to 18′-0″	3	3	4	4

For SI: 1 inch = 25.4 mm, 1 foot = 304.8 mm.

TABLE R603.7(2)
HEADER TO KING STUD CONNECTION REQUIREMENTS[a, b, c, d]

HEADER SPAN (feet)	ULTIMATE WIND SPEED (mph), EXPOSURE CATEGORY					
	115 B	120 B	130 B 115 C	<140 B 120 C	130 C	<140 C
≤ 4	4-No. 8 screws	4-No. 8 screws	4-No. 8 screws	4-No. 8 screws	6-No. 8 screws	6-No. 8 screws
> 4 to 8	4-No. 8 screws	4-No. 8 screws	4-No. 8 screws	6-No. 8 screws	8-No. 8 screws	8-No. 8 screws
> 8 to 12	4-No. 8 screws	6-No. 8 screws	6-No. 8 screws	8-No. 8 screws	10-No. 8 screws	12-No. 8 screws
> 12 to 16	4-No. 8 screws	6-No. 8 screws	8-No. 8 screws	10-No. 8 screws	12-No. 8 screws	14-No. 8 screws

For SI: 1 inch = 25.4 mm, 1 foot = 304.8 mm, 1 mile per hour = 0.447 m/s, 1 pound = 4.448 N.

a. All screw sizes shown are minimum.

b. For headers located on the first floor of a two-story building or the first or second floor of a three-story building, the total number of screws is permitted to be reduced by 2 screws, but the total number of screws shall be not less than four.

c. For roof slopes of 6:12 or greater, the required number of screws shall be permitted to be reduced by half, but the total number of screws shall be not less than four.

d. Screws can be replaced by an uplift connector that has a capacity of the number of screws multiplied by 164 pounds.

TABLE R603.8
HEAD AND SILL TRACK SPAN

ULTIMATE WIND SPEED AND EXPOSURE CATEGORY (mph)		ALLOWABLE HEAD AND SILL TRACK SPAN[a, b, c] (feet-inches)					
		TRACK DESIGNATION[d]					
B	C	350T125-33	350T125-43	350T125-54	550T125-33	550T125-43	550T125-54
115	—	5′-9″	6′-9″	9′-3″	7′-3″	9′-1″	12′-5″
120	—	5′-6″	6′-6″	8′-11″	7′-0″	8′-9″	11′-11″
130	115	4′-10″	5′-9″	7′-10″	6′-2″	7′-8″	10′-6″
< 140	120	4′-8″	5′-6″	7′-6″	5′-11″	7′-4″	10′-1″
—	130	4′-3″	5′-1″	6′-11″	5′-6″	6′-9″	9′-4″
—	< 140	4′-0″	4′-9″	6′-5″	5′-1″	6′-4″	8′-8″

For SI: 1 mil = 0.0254 mm, 1 inch = 25.4 mm, 1 foot = 304.8 mm, 1 mile per hour = 0.447 m/s, 1 ksi = 1,000 psi = 6.895 MPa.

a. Deflection limit: *L*/240.

b. Head and sill track spans are based on components and cladding wind pressures and 48-inch tributary span.

c. For openings less than 4 feet in height that have both a head track and sill track, the spans are permitted to be multiplied by 1.75. For openings less than or equal to 6 feet in height that have both a head track and a sill track, the spans are permitted to be multiplied by a factor of 1.5.

d. Minimum Grade 33 ksi steel shall be used for 33 mil and 43 mil thicknesses. Minimum Grade 50 ksi steel shall be used for 54 and 68 mil thicknesses.

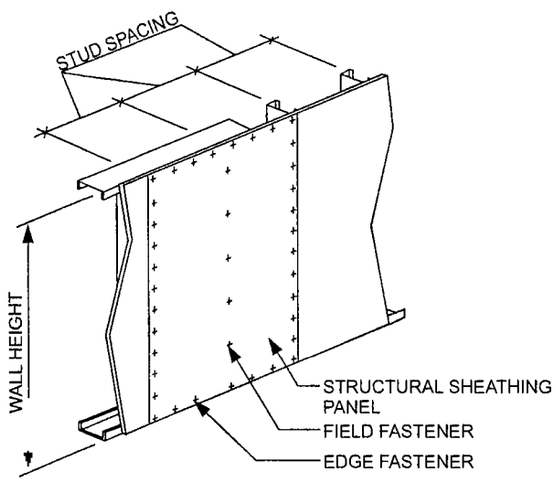

FIGURE R603.9
STRUCTURAL SHEATHING FASTENING PATTERN

R603.9.1 Sheathing materials. Structural sheathing panels shall consist of minimum $^{7}/_{16}$-inch-thick (11 mm) oriented strand board or $^{15}/_{32}$-inch-thick (12 mm) plywood.

R603.9.2 Determination of minimum length of full-height sheathing. The minimum length of full-height sheathing on each braced wall line shall be determined by multiplying the length of the braced wall line by the percentage obtained from Table R603.9.2(1) and by the plan aspect-ratio adjustment factors obtained from Table R603.9.2(2). The minimum length of full-height sheathing shall be not less than 20 percent of the braced wall line length.

To be considered full-height sheathing, structural sheathing shall extend from the bottom to the top of the wall without interruption by openings. Only sheathed, full-height wall sections, uninterrupted by openings, which are not less than 48 inches (1219 mm) wide, shall be counted toward meeting the minimum percentages in Table R603.9.2(1). In addition, structural sheathing shall comply with all of the following requirements:

1. Be installed with the long dimension parallel to the stud framing and shall cover the full vertical height of wall from the bottom of the bottom track to the top of the top track of each story. Installing the long dimension perpendicular to the stud framing or using shorter segments shall be permitted provided that the horizontal joint is blocked as described in Item 2.
2. Be blocked where the long dimension is installed perpendicular to the stud framing. Blocking shall be not less than 33 mil (0.84 mm) thickness. Each horizontal structural sheathing panel shall be fastened with No. 8 screws spaced at 6 inches (152 mm) on center to the blocking at the joint.
3. Be applied to each end (corners) of each of the exterior walls with a minimum 48-inch-wide (1219 mm) panel.

Exception: Where stone or masonry veneer is installed, the required length of full-height sheathing and overturning anchorage required shall be determined in accordance with Section R603.9.5.

R603.9.2.1 Full height sheathing. The minimum percentage of full-height structural sheathing shall be multiplied by 1.10 for 9-foot-high (2743 mm) walls and multiplied by 1.20 for 10-foot-high (3048 mm) walls.

R603.9.2.2 Full-height sheathing in lowest story. In the lowest story of a dwelling, multiplying the percentage of full-height sheathing required in Table R603.9.2(1) by 0.6 shall be permitted where hold-down anchors are provided in accordance with Section R603.9.4.2.

R603.9.3 Structural sheathing fastening. Edges and interior areas of structural sheathing panels shall be fastened to framing members and tracks in accordance with Figure R603.9 and Table R603.3.2(1). Screws for attachment of structural sheathing panels shall be bugle-head, flat-head, or similar head style with a minimum head diameter of 0.29 inch (8 mm).

For continuously sheathed braced wall lines using wood structural panels installed with No. 8 screws spaced 4 inches (102 mm) on center at all panel edges and 12 inches (304.8 mm) on center on intermediate framing members, the following shall apply:

1. Multiplying the percentages of full-height sheathing in Table R603.9.2(1) by 0.72 shall be permitted.
2. For bottom track attached to foundations or framing below, the bottom track anchor or screw connection spacing in Tables R505.3.1(1) and R603.3.1 shall be multiplied by two-thirds

R603.9.4 Uplift connection requirements. Uplift connections shall be provided in accordance with this section.

R603.9.4.1 Ultimate design wind speeds greater than 130 mph. Where ultimate design wind speeds exceed 130 miles per hour (58 m/s), Exposure Category C walls shall be provided with direct uplift connections in accordance with AISI S230, Section E13.3, and AISI S230, Section F8.2, as required for 140 miles per hour (63 m/s), Exposure Category C.

R603.9.4.2 Hold-down anchor. Where the percentage of full-height sheathing is adjusted in accordance with Section R603.9.2.2, a hold-down anchor, with a strength of 4,300 pounds (19 kN), shall be provided at each end of each full-height sheathed wall section used to meet the minimum percent sheathing requirements of Section R603.9.2. Hold-down anchors shall be attached to back-to-back studs; structural sheathing panels shall have edge fastening to the studs, in accordance with Section R603.9.3 and AISI S230, Table E11-1.

A single hold-down anchor, installed in accordance with Figure R603.9.4.2, shall be permitted at the corners of buildings.

R603.9.5 Structural sheathing for stone and masonry veneer. Where stone and masonry veneer are installed in accordance with Section R703.8, the length of full-height sheathing for exterior and interior wall lines backing or perpendicular to and laterally supporting walls with veneer shall comply with this section.

TABLE R603.9.2(1)
MINIMUM PERCENTAGE OF FULL-HEIGHT STRUCTURAL SHEATHING ON EXTERIOR WALLS[a, b]

WALL SUPPORTING	ROOF SLOPE	ULTIMATE WIND SPEED AND EXPOSURE (mph)					
		115 B	120 B	130 B / 115 C	< 140 B / 120 C	< 130 C	< 140 C
Roof and ceiling only (one story or top floor of two- or three-story building)	3:12	9	11	11	13	17	20
	6:12	13	15	17	22	28	35
	9:12	23	27	29	33	53	59
	12:12	32	39	40	44	70	76
One story, roof and ceiling (first floor of a two-story building or second floor of a three-story building)	3:12	26	32	34	39	53	67
	6:12	27	33	34	44	61	75
	9:12	38	45	46	61	78	92
	12:12	43	53	57	72	106	116
Two stories, roof and ceiling (first floor of a three-story building)	3:12	43	53	57	64	89	113
	6:12	41	51	51	67	95	114
	9:12	53	63	63	89	104	126
	12:12	54	67	74	100	142	157

For SI: 1 mph = 0.447 m/s.

a. Linear interpolation is permitted.

b. For hip-roofed homes the minimum percentage of full-height sheathing, based on wind, is permitted to be multiplied by a factor of 0.95 for roof slopes not exceeding 7:12 and a factor of 0.9 for roof slopes greater than 7:12.

TABLE R603.9.2(2)
FULL-HEIGHT SHEATHING LENGTH ADJUSTMENT FACTORS

PLAN ASPECT RATIO	LENGTH ADJUSTMENT FACTORS	
	Short wall	Long wall
1:1	1.0	1.0
1.5:1	1.5	0.67
2:1	2.0	0.50
3:1	3.0	0.33
4:1	4.0	0.25

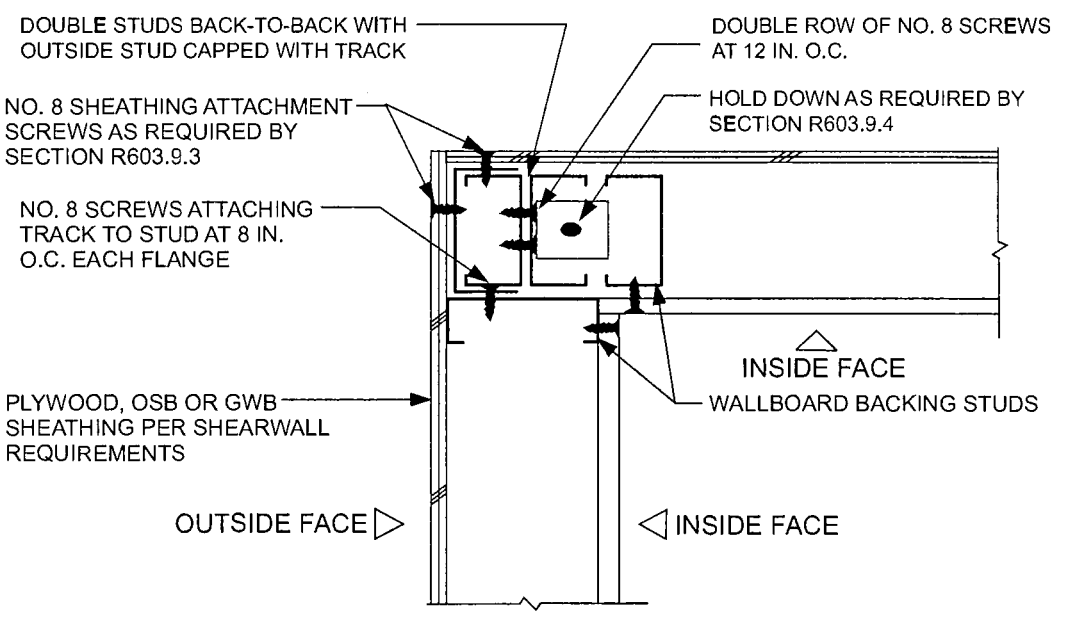

For SI: 1 inch = 25.4 mm.

FIGURE R603.9.4.2
CORNER STUD HOLD-DOWN DETAIL

TABLE R603.9.5(1)
REQUIRED LENGTH OF FULL-HEIGHT SHEATHING AND ASSOCIATED OVERTURNING ANCHORAGE FOR WALLS SUPPORTING WALLS WITH STONE OR MASONRY VENEER AND USING 33-MIL COLD-FORMED STEEL FRAMING AND 6-INCH SCREW SPACING ON THE PERIMETER OF EACH PANEL OF STRUCTURAL SHEATHING

SEISMIC DESIGN CATEGORY	STORY	BRACED WALL LINE LENGTH (feet)						SINGLE-STORY HOLD-DOWN FORCE (pounds)	CUMULATIVE HOLD-DOWN FORCE (pounds)
		10	20	30	40	50	60		
		Minimum total length of braced wall panels required along each braced wall line (feet)							
D_0		3.3	4.7	6.1	7.4	8.8	10.2	3,360	—
	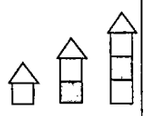	5.3	8.7	12.1	15.4	18.8	22.2	3,360	6,720
	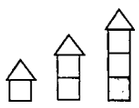	7.3	12.7	18.0	23.4	28.8	34.2	3,360	10,080
D_1	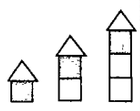	4.1	5.8	7.5	9.2	10.9	12.7	3,360	—
	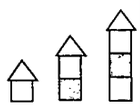	6.6	10.7	14.9	19.1	23.3	27.5	3,360	6,720
	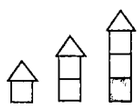	9.0	15.7	22.4	29.0	35.7	42.2	3,360	10,080
D_2	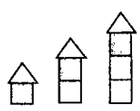	5.7	8.2	10.6	13.0	15.4	17.8	3,360	—
	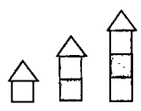	9.2	15.1	21.1	27.0	32.9	38.8	3,360	6,720
	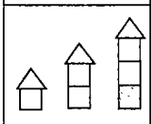	12.7	22.1	31.5	40.9	50.3	59.7	3,360	10,080

For SI: 1 mil = 0.0254 mm, 1 inch = 25.4 mm, 1 foot = 304.8 mm, 1 pound-force = 4.448 N.

TABLE R603.9.5(2)
REQUIRED LENGTH OF FULL-HEIGHT SHEATHING AND ASSOCIATED OVERTURNING ANCHORAGE FOR WALLS SUPPORTING WALLS WITH STONE OR MASONRY VENEER AND USING 43-MIL COLD-FORMED STEEL FRAMING AND 6-INCH SCREW SPACING ON THE PERIMETER OF EACH PANEL OF STRUCTURAL SHEATHING

SEISMIC DESIGN CATEGORY	STORY	BRACED WALL LINE LENGTH (feet)						SINGLE-STORY HOLD-DOWN FORCE (pounds)	CUMULATIVE HOLD-DOWN FORCE (pounds)
		10	20	30	40	50	60		
		Minimum total length of braced wall panels required along each braced wall line (feet)							
D_0	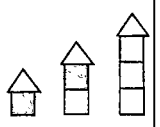	2.8	4.0	5.1	6.3	7.5	8.7	3,960	—
	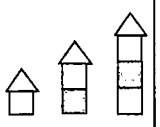	4.5	7.4	10.2	13.1	16.0	18.8	3,960	7,920
	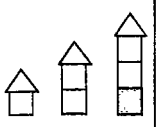	6.2	10.7	15.3	19.9	24.4	29.0	3,960	11,880
D_1	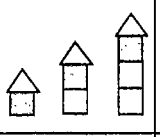	3.5	4.9	6.4	7.8	9.3	10.7	3,960	—
	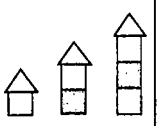	5.6	9.1	12.7	16.2	19.8	23.3	3,960	7,920
	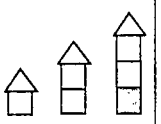	7.7	13.3	19.0	24.6	30.3	35.9	3,960	11,880
D_2	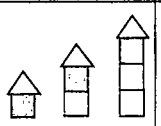	4.9	6.9	9.0	11.0	13.1	15.1	3,960	—
	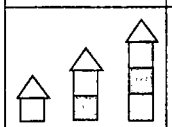	7.8	12.9	17.9	22.9	27.9	32.9	3,960	7,920
		10.8	18.8	26.7	34.7	42.7	50.7	3,960	11,880

For SI: 1 mil = 0.0254 mm, 1 inch = 25.4 mm, 1 foot = 304.8 mm, 1 pound-force = 4.448 N.

TABLE R603.9.5(3)
REQUIRED LENGTH OF FULL-HEIGHT SHEATHING AND ASSOCIATED OVERTURNING ANCHORAGE FOR WALLS SUPPORTING WALLS WITH STONE OR MASONRY VENEER AND USING 33-MIL COLD-FORMED STEEL FRAMING AND 4-INCH SCREW SPACING ON THE PERIMETER OF EACH PANEL OF STRUCTURAL SHEATHING

SEISMIC DESIGN CATEGORY	STORY	BRACED WALL LINE LENGTH (feet)						SINGLE-STORY HOLD-DOWN FORCE (pounds)	CUMULATIVE HOLD-DOWN FORCE (pounds)
		10	20	30	40	50	60		
		Minimum total length of braced wall panels required along each braced wall line (feet)							
D_0		2.5	3.6	4.6	5.7	6.8	7.8	4,392	—
	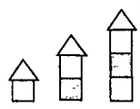	4.0	6.6	9.2	11.8	14.4	17.0	4,392	8,784
	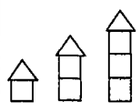	5.6	9.7	13.8	17.9	22.0	26.2	4,392	13,176
D_1	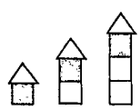	3.1	4.4	5.7	7.1	8.4	9.7	4,392	—
	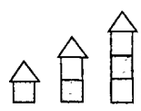	5.0	8.2	11.4	14.6	17.8	21.0	4,392	8,784
	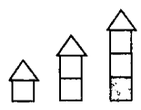	6.9	12.0	17.1	22.2	27.3	32.4	4,392	13,176
D_2	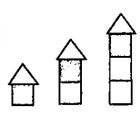	4.4	6.2	8.1	10.0	11.8	13.7	4,392	—
	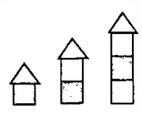	7.1	11.6	16.1	20.6	25.1	29.7	4,392	8,784
		9.7	16.9	24.1	31.3	38.5	45.7	4,392	13,176

For SI: 1 mil = 0.0254 mm, 1 inch = 25.4 mm, 1 foot = 304.8 mm, 1 pound-force = 4.448 N.

TABLE R603.9.5(4)
REQUIRED LENGTH OF FULL-HEIGHT SHEATHING AND ASSOCIATED OVERTURNING ANCHORAGE FOR WALLS SUPPORTING WALLS WITH STONE OR MASONRY VENEER AND USING 43-MIL COLD-FORMED STEEL FRAMING AND 4-INCH SCREW SPACING ON THE PERIMETER OF EACH PANEL OF STRUCTURAL SHEATHING

SEISMIC DESIGN CATEGORY	STORY	BRACED WALL LINE LENGTH (feet)						SINGLE-STORY HOLD-DOWN FORCE (pounds)	CUMULATIVE HOLD-DOWN FORCE (pounds)
		10	20	30	40	50	60		
		Minimum total length of braced wall panels required along each braced wall line (feet)							
D_0	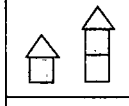	1.9	2.7	3.4	4.2	5.0	5.8	5,928	—
		3.0	4.9	6.8	8.8	10.7	12.6	5,928	11,856
D_1	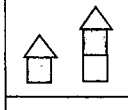	2.3	3.3	4.3	5.2	6.2	7.2	5,928	—
	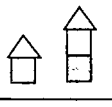	3.7	6.1	8.5	10.8	13.2	15.6	5,928	11,856
D_2	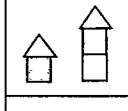	3.3	4.6	6.0	7.4	8.7	10.1	5,928	—
	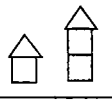	5.2	8.6	11.9	15.3	18.6	22.0	5,928	11,856

For SI: 1 mil = 0.0254 mm, 1 inch = 25.4 mm, 1 foot = 304.8 mm, 1 pound-force = 4.448 N.

R603.9.5.1 Seismic Design Category C. In Seismic Design Category C, the length of structural sheathing for walls supporting one story, roof and ceiling shall be the greater of the amounts required by Section R603.9.2, except Section R603.9.2.2 shall be permitted.

R603.9.5.2 Seismic Design Categories D_0, D_1 and D_2. In Seismic Design Categories D_0, D_1 and D_2, the required length of structural sheathing and overturning anchorage shall be determined in accordance with Tables R603.9.5(1), R603.9.5(2), R603.9.5(3), and R603.9.5(4). Overturning anchorage shall be installed on the doubled studs at the end of each full-height wall segment.

SECTION R604
WOOD STRUCTURAL PANELS

R604.1 Identification and grade. Wood structural panels shall conform to DOC PS 1, DOC PS 2 or ANSI/APA PRP 210, CSA O325 or CSA O437. Panels shall be identified by a grade mark or certificate of inspection issued by an approved agency.

R604.2 Allowable spans. The maximum allowable spans for wood structural panel wall sheathing shall not exceed the values set forth in Table R602.3(3).

R604.3 Installation. Wood structural panel wall sheathing shall be attached to framing in accordance with Table R602.3(1) or R602.3(3).

SECTION R605
PARTICLEBOARD

R605.1 Identification and grade. Particleboard shall conform to ANSI A208.1 and shall be so identified by a grade mark or certificate of inspection issued by an approved agency. Particleboard shall comply with the grades specified in Table R602.3(4).

SECTION R606
GENERAL MASONRY CONSTRUCTION

R606.1 General. Masonry construction shall be designed and constructed in accordance with the provisions of this section, TMS 402, TMS 403, or TMS 404.

R606.1.1 Professional registration not required. Empirical design provisions of Appendix A of TMS 402, the provisions of TMS 403, or the provisions of this section are used to design masonry, project drawings, typical details and specifications *shall not exempt construction documents from the requirement to be stamped by a California licensed architect or engineer. Notwithstanding other sections of law, the law establishing these provisions is found in Business and Professions Code Sections 5537.1 and 6737.1.*

R606.2 Masonry construction materials.

R606.2.1 Concrete masonry units. Concrete masonry units shall conform to the following standards: ASTM C55 for concrete brick; ASTM C73 for calcium silicate face

brick; ASTM C90 for load-bearing concrete masonry units; ASTM C744 for prefaced concrete and calcium silicate masonry units; or ASTM C1634 for concrete facing brick.

R606.2.2 Clay or shale masonry units. Clay or shale masonry units shall conform to the following standards: ASTM C34 for structural clay load-bearing wall tile; ASTM C56 for structural clay nonload-bearing wall tile; ASTM C62 for building brick (solid masonry units made from clay or shale); ASTM C126 for ceramic-glazed structural clay facing tile, facing brick and solid masonry units; ASTM C212 for structural clay facing tile; ASTM C216 for facing brick (solid masonry units made from clay or shale); ASTM C652 for hollow brick (hollow masonry units made from clay or shale); ASTM C1088 for solid units of thin veneer brick; or ASTM C1405 for glazed brick (single-fired solid brick units).

Exception: Structural clay tile for nonstructural use in fireproofing of structural members and in wall furring shall not be required to meet the compressive strength specifications. The fire-resistance rating shall be determined in accordance with ASTM E119 or UL 263 and shall comply with the requirements of Section R302.

R606.2.3 AAC masonry. AAC masonry units shall conform to ASTM C1691 and ASTM C1693 for the strength class specified.

R606.2.4 Stone masonry units. Stone masonry units shall conform to the following standards: ASTM C503 for marble building stone (exterior); ASTM C568 for limestone building stone; ASTM C615 for granite building stone; ASTM C616 for sandstone building stone; or ASTM C629 for slate building stone.

R606.2.5 Architectural cast stone. Architectural cast stone shall conform to ASTM C1364.

R606.2.6 Adhered manufactured stone masonry veneer units. Adhered manufactured stone masonry veneer units shall conform to ASTM C1670.

R606.2.7 Second-hand units. Second-hand masonry units shall not be reused unless they conform to the requirements of new units. The units shall be of whole, sound materials and free from cracks and other defects that will interfere with proper laying or use. Old mortar shall be cleaned from the unit before reuse.

R606.2.8 Mortar. Except for mortars listed in Sections R606.2.9, R606.2.10 and R606.2.11, mortar for use in masonry construction shall meet the proportion specifications of Table R606.2.8 or the property specifications of ASTM C270. The type of mortar shall be in accordance with Sections R606.2.8.1, R606.2.8.2 and R606.2.8.3.

R606.2.8.1 Foundation walls. Mortar for masonry foundation walls constructed as set forth in Tables R404.1.1(1) through R404.1.1(4) shall be Type M or S mortar.

R606.2.8.2 Masonry in Seismic Design Categories A, B and C. Mortar for masonry serving as the lateral force-resisting system in Seismic Design Categories A, B and C shall be Type M, S or N mortar.

TABLE R606.2.8
MORTAR PROPORTIONS[a, b]

		PROPORTIONS BY VOLUME (cementitious materials)								
MORTAR	TYPE	Portland cement or blended cement	Mortar cement			Masonry cement			Hydrated lime[c] or lime putty	Aggregate ratio (measured in damp, loose conditions)
			M	S	N	M	S	N		
Cement-lime	M	1	—	—	—	—	—	—	$^1/_4$	Not less than $2^1/_4$ and not more than 3 times the sum of separate volumes of lime, if used, and cement
	S	1	—	—	—	—	—	—	over $^1/_4$ to $^1/_2$	
	N	1	—	—	—	—	—	—	over $^1/_2$ to $1^1/_4$	
	O	1	—	—	—	—	—	—	over $1^1/_4$ to $2^1/_2$	
Mortar cement	M	1	—	—	1	—	—	—	—	
	M	—	1	—	—	—	—	—		
	S	$^1/_2$	—	—	1	—	—	—		
	S	—	—	1	—	—	—	—		
	N	—	—	—	1	—	—	—		
	O	—	—	—	1	—	—	—		
Masonry cement	M	1	—	—	—	—	—	1	—	
	M	—	—	—	—	1	—	—		
	S	$^1/_2$	—	—	—	—	—	1		
	S	—	—	—	—	—	1	—		
	N	—	—	—	—	—	—	1		
	O	—	—	—	—	—	—	1		

For SI: 1 cubic foot = 0.0283 m^3, 1 pound = 0.454 kg.

a. For the purpose of these specifications, the weight of 1 cubic foot of the respective materials shall be considered to be as follows:

Portland cement	94 pounds	Masonry cement	Weight printed on bag
Mortar cement	Weight printed on bag	Hydrated lime	40 pounds
Lime putty (Quicklime)	80 pounds	Sand, damp and loose	80 pounds of dry sand

b. Two air-entraining materials shall not be combined in mortar.

c. Hydrated lime conforming to the requirements of ASTM C207.

R606.2.8.3 Masonry in Seismic Design Categories D_0, D_1 and D_2. Mortar for masonry serving as the lateral-force-resisting system in Seismic Design Categories D_0, D_1 and D_2 shall be Type M or S Portland cement-lime or mortar cement.

R606.2.9 Surface-bonding mortar. Surface-bonding mortar shall comply with ASTM C887. Surface bonding of concrete masonry units shall comply with ASTM C946.

R606.2.10 Mortar for AAC masonry. Thin-bed mortar for AAC masonry shall comply with Article 2.1 C.1 of TMS 602. Mortar used for the leveling courses of AAC masonry shall comply with Article 2.1 C.2 of TMS 602.

R606.2.11 Mortar for adhered masonry veneer. Mortar for use with adhered masonry veneer shall conform to ASTM C270 Type S or Type N or shall comply with ANSI A118.4 for latex-modified Portland cement mortar.

R606.2.12 Grout. Grout shall consist of cementitious material and aggregate in accordance with ASTM C476 or the proportion specifications of Table R606.2.12. Type M or Type S mortar to which sufficient water has been added to produce pouring consistency shall be permitted to be used as grout.

R606.2.13 Metal reinforcement and accessories. Metal reinforcement and accessories shall conform to Article 2.4 of TMS 602.

R606.3 Construction requirements.

R606.3.1 Bed and head joints. Unless otherwise required or indicated on the project drawings, head and bed joints shall be $^3/_8$ inch (9.5 mm) thick, except that the thickness of the bed joint of the starting course placed over foundations shall be not less than $^1/_4$ inch (6.4 mm) and not more than $^3/_4$ inch (19.1 mm). Mortar joint thickness for load-bearing masonry shall be within the following tolerances from the specified dimensions:

1. Bed joint: + $^1/_8$ inch (3.2 mm).
2. Head joint: - $^1/_4$ inch (6.4 mm), + $^3/_8$ inch (9.5 mm).
3. Collar joints: - $^1/_4$ inch (6.4 mm), + $^3/_8$ inch (9.5 mm).

R606.3.2 Masonry unit placement. The mortar shall be sufficiently plastic and units shall be placed with sufficient pressure to extrude mortar from the joint and produce a tight joint. Deep furrowing of bed joints that produces voids shall not be permitted. Any units disturbed to the extent that initial bond is broken after initial placement shall be removed and relaid in fresh mortar. Surfaces to be in contact with mortar shall be clean and free of deleterious materials.

R606.3.2.1 Solid masonry. Solid masonry units shall be laid with full head and bed joints and all interior vertical joints that are designed to receive mortar shall be filled.

R606.3.2.2 Hollow masonry. For hollow masonry units, head and bed joints shall be filled solidly with mortar for a distance in from the face of the unit not less than the thickness of the face shell.

R606.3.3 Installation of wall ties. The installation of wall ties shall be as follows:

1. The ends of wall ties shall be embedded in mortar joints. Wall ties shall have not less than $^5/_8$-inch (15.9 mm) mortar coverage from the exposed face.
2. Wall ties shall not be bent after being embedded in grout or mortar.
3. For solid masonry units, solid grouted hollow units, or hollow units in anchored masonry veneer, wall ties shall be embedded in mortar bed not less than $1^1/_2$ inches (38 mm).
4. For hollow masonry units in other than anchored masonry veneer, wall ties shall engage outer face shells by not less than $^1/_2$ inch (13 mm).

R606.3.4 Protection for reinforcement. Bars shall be completely embedded in mortar or grout. Joint reinforcement embedded in horizontal mortar joints shall not have less than $^5/_8$-inch (15.9 mm) mortar coverage from the exposed face. Other reinforcement shall have a minimum coverage of one bar diameter over all bars, but not less than $^3/_4$ inch (19 mm), except where exposed to weather or soil, in which case the minimum coverage shall be 2 inches (51 mm).

R606.3.4.1 Corrosion protection. Minimum corrosion protection of joint reinforcement, anchor ties and wire fabric for use in masonry wall construction shall conform to Table R606.3.4.1.

R606.3.5 Grouting requirements.

R606.3.5.1 Grout placement. Grout shall be a plastic mix suitable for pumping without segregation of the constituents and shall be mixed thoroughly. Grout shall be placed by pumping or by an approved alternate method and shall be placed before any initial set occurs and not more than $1^1/_2$ hours after water has been added. Grout shall be consolidated by puddling or mechanical vibrating during placing and reconsolidated after excess moisture has been absorbed but before plasticity is lost. Grout shall not be pumped through aluminum pipes.

TABLE R606.2.12
GROUT PROPORTIONS BY VOLUME FOR MASONRY CONSTRUCTION

TYPE	PORTLAND CEMENT OR BLENDED CEMENT SLAG CEMENT	HYDRATED LIME OR LIME PUTTY	AGGREGATE MEASURED IN A DAMP, LOOSE CONDITION	
			Fine	Coarse
Fine	1	0 to 1/10	$2^1/_4$ to 3 times the sum of the volume of the cementitious materials	—
Coarse	1	0 to 1/10	$2^1/_4$ to 3 times the sum of the volume of the cementitious materials	1 to 2 times the sum of the volumes of the cementitious materials

Maximum pour heights and the minimum dimensions of spaces provided for grout placement shall conform to Table R606.3.5.1. Grout shall be poured in lifts with a maximum height of 8 feet (2438 mm). Where a total grout pour exceeds 8 feet (2438 mm) in height, the grout shall be placed in lifts not exceeding 64 inches (1626 mm) and special inspection during grouting shall be required. If the work is stopped for 1 hour or longer, the horizontal construction joints shall be formed by stopping all tiers at the same elevation and with the grout 1 inch (25 mm) below the top.

R606.3.5.2 Cleanouts. Provisions shall be made for cleaning the space to be grouted. Mortar that projects more than $^1/_2$ inch (12.7 mm) into the grout space and any other foreign matter shall be removed from the grout space prior to inspection and grouting. Where required by the building official, cleanouts shall be provided in the bottom course of masonry for each grout pour where the grout pour height exceeds 64 inches (1626 mm). In solid grouted masonry, cleanouts shall be spaced horizontally not more than 32 inches (813 mm) on center. The cleanouts shall be sealed before grouting and after inspection.

R606.3.5.3 Construction. Requirements for grouted masonry construction shall be as follows:

1. Masonry shall be built to preserve the unobstructed vertical continuity of the cells or spaces to be filled. In partially grouted construction, cross webs forming cells to be filled shall be full-bedded in mortar to prevent leakage of grout. Head and end joints shall be solidly filled with mortar for a distance in from the face of the wall or unit not less than the thickness of the longitudinal face shells.
2. Vertical reinforcement shall be held in position at top and bottom and at intervals not exceeding 200 diameters of the reinforcement.
3. Cells containing reinforcement shall be filled solidly with grout.
4. The thickness of grout or mortar between masonry units and reinforcement shall be not less than $^1/_4$ inch (6.4 mm), except that $^1/_4$-inch (6.4 mm) bars shall be permitted to be laid in horizontal mortar joints not less than $^1/_2$ inch (12.7 mm) thick, and steel wire reinforcement shall be permitted to be laid in horizontal mortar joints not less than twice the thickness of the wire diameter.

TABLE R606.3.4.1
MINIMUM CORROSION PROTECTION

MASONRY METAL ACCESSORY	STANDARD
Joint reinforcement, interior walls	ASTM A641, Class 1
Wire ties or anchors in exterior walls completely embedded in mortar or grout	ASTM A641, Class 3
Wire ties or anchors in exterior walls not completely embedded in mortar or grout	ASTM A153, Class B-2
Joint reinforcement in exterior walls or interior walls exposed to moist environment	ASTM A153, Class B-2
Sheet metal ties or anchors exposed to weather	ASTM A153, Class B-2
Sheet metal ties or anchors completely embedded in mortar or grout	ASTM A653, Coating Designation G60
Stainless steel hardware for any exposure	ASTM A167, Type 304

TABLE R606.3.5.1
GROUT SPACE DIMENSIONS AND POUR HEIGHTS

GROUT TYPE	GROUT POUR MAXIMUM HEIGHT (feet)	MINIMUM WIDTH OF GROUT SPACES[a, b] (inches)	MINIMUM GROUT[b, c] SPACE DIMENSIONS FOR GROUTING CELLS OF HOLLOW UNITS (inches × inches)
Fine	1	0.75	1.5 × 2
	5	2	2 × 3
	12	2.5	2.5 × 3
	24	3	3 × 3
Coarse	1	1.5	1.5 × 3
	5	2	2.5 × 3
	12	2.5	3 × 3
	24	3	3 × 4

For SI: 1 inch = 25.4 mm, 1 foot = 304.8 mm.

a. For grouting between masonry wythes.

b. Grout space dimension is the clear dimension between any masonry protrusion and shall be increased by the horizontal projection of the diameters of the horizontal bars within the cross section of the grout space.

c. Area of vertical reinforcement shall not exceed 6 percent of the area of the grout space.

R606.3.6 Grouted multiple-wythe masonry. Grouted multiple-wythe masonry shall conform to all the requirements specified in Section R606.3.5 and the requirements of this section.

R606.3.6.1 Bonding of backup wythe. Where all interior vertical spaces are filled with grout in multiple-wythe construction, masonry headers shall not be permitted. Metal wall ties shall be used in accordance with Section R606.13.2 to prevent spreading of the wythes and to maintain the vertical alignment of the wall. Wall ties shall be installed in accordance with Section R606.13.2 where the backup wythe in multiple-wythe construction is fully grouted.

R606.3.6.2 Grout barriers. Vertical grout barriers or dams shall be built of solid masonry across the grout space the entire height of the wall to control the flow of the grout horizontally. Grout barriers shall be not more than 25 feet (7620 mm) apart. The grouting of any section of a wall between control barriers shall be completed in one day without interruptions greater than 1 hour.

R606.3.7 Masonry bonding pattern. Masonry laid in running and stack bond shall conform to Sections R606.3.7.1 and R606.3.7.2.

R606.3.7.1 Masonry laid in running bond. In each wythe of masonry laid in running bond, head joints in successive courses shall be offset by not less than one-fourth the unit length, or the masonry walls shall be reinforced longitudinally as required in Section R606.3.7.2.

R606.3.7.2 Masonry laid in stack bond. Where unit masonry is laid with less head joint offset than in Section R606.3.7.1, the minimum area of horizontal reinforcement placed in mortar bed joints or in bond beams spaced not more than 48 inches (1219 mm) apart shall be 0.0007 times the vertical cross-sectional area of the wall.

R606.4 Thickness of masonry. The nominal thickness of masonry walls shall conform to the requirements of Sections R606.4.1 through R606.4.4.

R606.4.1 Minimum thickness. The minimum thickness of masonry bearing walls more than one story high shall be 8 inches (203 mm). Solid masonry walls of one-story dwellings and garages shall be not less than 6 inches (152 mm) in thickness where not greater than 9 feet (2743 mm) in height, provided that where gable construction is used, an additional 6 feet (1829 mm) is permitted to the peak of the gable. Masonry walls shall be laterally supported in either the horizontal or vertical direction at intervals as required by Section R606.6.4.

R606.4.2 Rubble stone masonry wall. The minimum thickness of rough, random or coursed rubble stone masonry walls shall be 16 inches (406 mm).

R606.4.3 Change in thickness. Where walls of masonry of hollow units or masonry-bonded hollow walls are decreased in thickness, a course of solid masonry or masonry units filled with mortar or grout shall be constructed between the wall below and the thinner wall above, or special units or construction shall be used to transmit the loads from face shells or wythes above to those below.

R606.4.4 Parapet walls. Unreinforced solid masonry parapet walls shall be not less than 8 inches (203 mm) thick and their height shall not exceed four times their thickness. Unreinforced hollow unit masonry parapet walls shall be not less than 8 inches (203 mm) thick, and their height shall not exceed three times their thickness. Masonry parapet walls in areas subject to wind loads of 30 pounds per square foot (1.44 kPa) located in Seismic Design Category D_0, D_1 or D_2, or on townhouses in Seismic Design Category C shall be reinforced in accordance with Section R606.12.

R606.5 Corbeled masonry. Corbeled masonry shall be in accordance with Sections R606.5.1 through R606.5.3.

R606.5.1 Units. Solid masonry units or masonry units filled with mortar or grout shall be used for corbeling.

R606.5.2 Corbel projection. The maximum projection of one unit shall not exceed one-half the height of the unit or one-third the thickness at right angles to the wall. The maximum corbeled projection beyond the face of the wall shall not exceed:

1. One-half of the wall thickness for multiple-wythe walls bonded by mortar or grout and wall ties or masonry headers.
2. One-half the wythe thickness for single wythe walls, masonry-bonded hollow walls, multiple-wythe walls with open collar joints and veneer walls.

R606.5.3 Corbeled masonry supporting floor or roof-framing members. Where corbeled masonry is used to support floor or roof-framing members, the top course of the corbel shall be a header course or the top course bed joint shall have ties to the vertical wall.

R606.6 Support conditions. Bearing and support conditions shall be in accordance with Sections R606.6.1 through R606.6.4.

R606.6.1 Bearing on support. Each masonry wythe shall be supported by not less than two-thirds of the wythe thickness.

R606.6.2 Support at foundation. Cavity wall or masonry veneer construction shall be permitted to be supported on an 8-inch (203 mm) foundation wall, provided the 8-inch (203 mm) wall is corbeled to the width of the wall system above with masonry constructed of solid masonry units or masonry units filled with mortar or grout. The total horizontal projection of the corbel shall not exceed 2 inches (51 mm) with individual corbels projecting not more than one-third the thickness of the unit or one-half the height of the unit. The hollow space behind the corbeled masonry shall be filled with mortar or grout.

R606.6.3 Beam supports. Beams, girders or other concentrated loads supported by a wall or column shall have a bearing of not less than 3 inches (76 mm) in length measured parallel to the beam on solid masonry not less than 4 inches (102 mm) in thickness, or on a metal bearing plate of adequate design and dimensions to distribute the load safely, or on a continuous reinforced masonry member projecting not less than 4 inches (102 mm) from the face of the wall.

R606.6.3.1 Joist bearing. Joists shall have a bearing of not less than $1^1/_2$ inches (38 mm), except as provided in Section R606.6.3, and shall be supported in accordance with Figure R606.11(1).

R606.6.4 Lateral support. Masonry walls shall be laterally supported in either the horizontal or the vertical direction. The maximum spacing between lateral supports shall not exceed the distances in Table R606.6.4. Lateral support shall be provided by cross walls, pilasters, buttresses or structural frame members where the limiting distance is taken horizontally, or by floors or roofs where the limiting distance is taken vertically.

TABLE R606.6.4
SPACING OF LATERAL SUPPORT FOR MASONRY WALLS

CONSTRUCTION	MAXIMUM WALL LENGTH TO THICKNESS OR WALL HEIGHT TO THICKNESS[a, b]
Bearing walls:	
Solid or solid grouted	20
All other	18
Nonbearing walls:	
Exterior	18
Interior	36

For SI: 1 foot = 304.8 mm.

a. Except for cavity walls and cantilevered walls, the thickness of a wall shall be its nominal thickness measured perpendicular to the face of the wall. For cavity walls, the thickness shall be determined as the sum of the nominal thicknesses of the individual wythes. For cantilever walls, except for parapets, the ratio of height to nominal thickness shall not exceed 6 for solid masonry, or 4 for hollow masonry. For parapets, see Section R606.4.4.

b. An additional unsupported height of 6 feet is permitted for gable end walls.

R606.6.4.1 Horizontal lateral support. Lateral support in the horizontal direction provided by intersecting masonry walls shall be provided by one of the methods in Section R606.6.4.1.1 or R606.6.4.1.2.

R606.6.4.1.1 Bonding pattern. Fifty percent of the units at the intersection shall be laid in an overlapping masonry bonding pattern, with alternate units having a bearing of not less than 3 inches (76 mm) on the unit below.

R606.6.4.1.2 Metal reinforcement. Interior nonload-bearing walls shall be anchored at their intersections, at vertical intervals of not more than 16 inches (406 mm) with joint reinforcement of not less than 9 gage [0.148 inch (4 mm)], or $^1/_4$-inch (6 mm) galvanized mesh hardware cloth. Intersecting masonry walls, other than interior nonload-bearing walls, shall be anchored at vertical intervals of not more than 8 inches (203 mm) with joint reinforcement of not less than 9 gage (4 mm) and shall extend not less than 30 inches (762 mm) in each direction at the intersection. Other metal ties, joint reinforcement or anchors, if used, shall be spaced to provide equivalent area of anchorage to that required by this section.

R606.6.4.2 Vertical lateral support. Vertical lateral support of masonry walls in Seismic Design Category A, B or C shall be provided in accordance with one of the methods in Section R606.6.4.2.1 or R606.6.4.2.2.

R606.6.4.2.1 Roof structures. Masonry walls shall be anchored to roof structures with metal strap anchors spaced in accordance with the manufacturer's instructions, $^1/_2$-inch (13 mm) bolts spaced not more than 6 feet (1829 mm) on center, or other approved anchors. Anchors shall be embedded not less than 16 inches (406 mm) into the masonry, or be hooked or welded to bond beam reinforcement placed not less than 6 inches (152 mm) from the top of the wall.

R606.6.4.2.2 Floor diaphragms. Masonry walls shall be anchored to floor diaphragm framing by metal strap anchors spaced in accordance with the manufacturer's instructions, $^1/_2$-inch-diameter (13 mm) bolts spaced at intervals not to exceed 6 feet (1829 mm) and installed as shown in Figure R606.11(1), or by other approved methods.

R606.7 Piers. The unsupported height of masonry piers shall not exceed 10 times their least dimension. Where structural clay tile or hollow concrete masonry units are used for isolated piers to support beams and girders, the cellular spaces shall be filled solidly with grout or Type M or S mortar, except that unfilled hollow piers shall be permitted to be used if their unsupported height is not more than four times their least dimension. Where hollow masonry units are solidly filled with grout or Type M, S or N mortar, the allowable compressive stress shall be permitted to be increased as provided in Table R606.9.

R606.7.1 Pier cap. Hollow piers shall be capped with 4 inches (102 mm) of solid masonry or concrete, a masonry cap block, or shall have cavities of the top course filled with concrete or grout.

R606.8 Chases. Chases and recesses in masonry walls shall not be deeper than one-third the wall thickness. The maximum length of a horizontal chase or horizontal projection shall not exceed 4 feet (1219 mm) and shall have not less than 8 inches (203 mm) of masonry in back of the chases and recesses and between adjacent chases or recesses and the jambs of openings. Chases and recesses in masonry walls shall be designed and constructed so as not to reduce the required strength or required fire resistance of the wall and shall not be permitted within the required area of a pier. Masonry directly above chases or recesses wider than 12 inches (305 mm) shall be supported on noncombustible lintels.

R606.9 Allowable stresses. Allowable compressive stresses in masonry shall not exceed the values prescribed in Table R606.9. In determining the stresses in masonry, the effects of all loads and conditions of loading and the influence of all forces affecting the design and strength of the several parts shall be taken into account.

R606.9.1 Combined units. In walls or other structural members composed of different kinds or grades of units, materials or mortars, the maximum stress shall not exceed the allowable stress for the weakest of the combination of units, materials and mortars of which the member is composed. The net thickness of any facing unit that is used to resist stress shall be not less than $1^1/_2$ inches (38 mm).

R606.10 Lintels. Masonry over openings shall be supported by steel lintels, reinforced concrete or masonry lintels or masonry arches, designed to support load imposed.

TABLE R606.9
ALLOWABLE COMPRESSIVE STRESSES FOR EMPIRICAL DESIGN OF MASONRY

CONSTRUCTION; COMPRESSIVE STRENGTH OF UNIT, GROSS AREA	ALLOWABLE COMPRESSIVE STRESSES[a] GROSS CROSS-SECTIONAL AREA[b]	
	Type M or S mortar	Type N mortar
Solid masonry of brick and other solid units of clay or shale; sand-lime or concrete brick:		
8,000 + psi	350	300
4,500 psi	225	200
2,500 psi	160	140
1,500 psi	115	100
Grouted[c] masonry, of clay or shale; sand-lime or concrete:		
4,500 + psi	225	200
2,500 psi	160	140
1,500 psi	115	100
Solid masonry of solid concrete masonry units:		
3,000 + psi	225	200
2,000 psi	160	140
1,200 psi	115	100
Masonry of hollow load-bearing units:		
2,000 + psi	140	120
1,500 psi	115	100
1,000 psi	75	70
700 psi	60	55
Hollow walls (cavity or masonry bonded[d]) solid units:		
2,500 + psi	160	140
1,500 psi	115	100
Hollow units	75	70
Stone ashlar masonry:		
Granite	720	640
Limestone or marble	450	400
Sandstone or cast stone	360	320
Rubble stone masonry:		
Coarse, rough or random	120	100

For SI: 1 pound per square inch = 6.895 kPa.

a. Linear interpolation shall be used for determining allowable stresses for masonry units having compressive strengths that are intermediate between those given in the table.

b. Gross cross-sectional area shall be calculated on the actual rather than nominal dimensions.

c. See Section R606.13.

d. Where floor and roof loads are carried on one wythe, the gross cross-sectional area is that of the wythe under load; if both wythes are loaded, the gross cross-sectional area is that of the wall minus the area of the cavity between the wythes. Walls bonded with metal ties shall be considered as cavity walls unless the collar joints are filled with mortar or grout.

R606.11 Anchorage. Masonry walls shall be anchored to floor and roof systems in accordance with the details shown in Figure R606.11(1), R606.11(2) or R606.11(3). Footings shall be permitted to be considered as points of lateral support.

R606.12 Seismic requirements. The seismic requirements of this section shall apply to the design of masonry and the construction of masonry building elements located in Seismic Design Category D_0, D_1 or D_2. Townhouses in Seismic Design Category C shall comply with the requirements of Section R606.12.2. These requirements shall not apply to glass unit masonry conforming to Section R610, anchored masonry veneer conforming to Section R703.8 or adhered masonry veneer conforming to Section R703.12.

R606.12.1 General. Masonry structures and masonry elements shall comply with the requirements of Sections R606.12.2 through R606.12.4 based on the seismic design category established in Table R301.2(2). Masonry structures and masonry elements shall comply with the requirements of Section R606.12 and Figures R606.11(1), R606.11(2) and R606.11(3) or shall be designed in accordance with TMS 402 or TMS 403.

R606.12.1.1 Floor and roof diaphragm construction. Floor and roof diaphragms shall be constructed of wood structural panels attached to wood framing in accordance with Table R602.3(1) or to cold-formed steel floor framing in accordance with Table R505.3.1(2) or to cold-formed steel roof framing in accordance with Table R804.3. Additionally, sheathing panel edges perpendicular to framing members shall be backed by blocking, and sheathing shall be connected to the blocking with fasteners at the edge spacing. For Seismic Design Categories C, D_0, D_1 and D_2, where the width-to-thickness dimension of the diaphragm exceeds 2-to-1, edge spacing of fasteners shall be 4 inches (102 mm) on center.

R606.12.2 Seismic Design Category C. Townhouses located in Seismic Design Category C shall comply with the requirements of this section.

R606.12.2.1 Minimum length of wall without openings. Table R606.12.2.1 shall be used to determine the minimum required solid wall length without openings at each masonry exterior wall. The provided percentage of solid wall length shall include only those wall segments that are 3 feet (914 mm) or longer. The maximum clear distance between wall segments included in determining the solid wall length shall not exceed 18 feet (5486 mm). Shear wall segments required to meet the minimum wall length shall be in accordance with Section R606.12.2.2.3.

R606.12.2.2 Design of elements not part of the lateral force-resisting system.

R606.12.2.2.1 Load-bearing frames or columns. Elements not part of the lateral force-resisting system shall be analyzed to determine their effect on the response of the system. The frames or columns shall be adequate for vertical load-carrying capacity and induced moment caused by the design *story* drift.

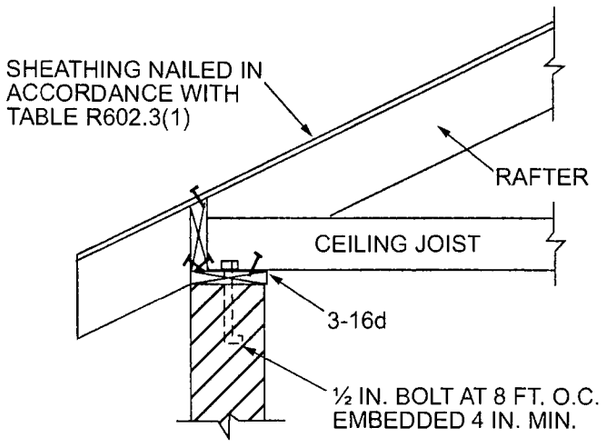

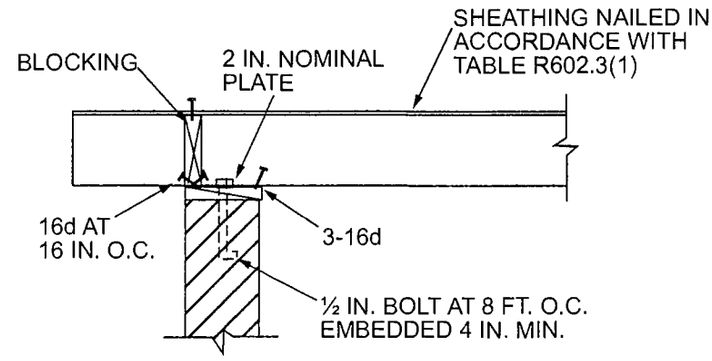

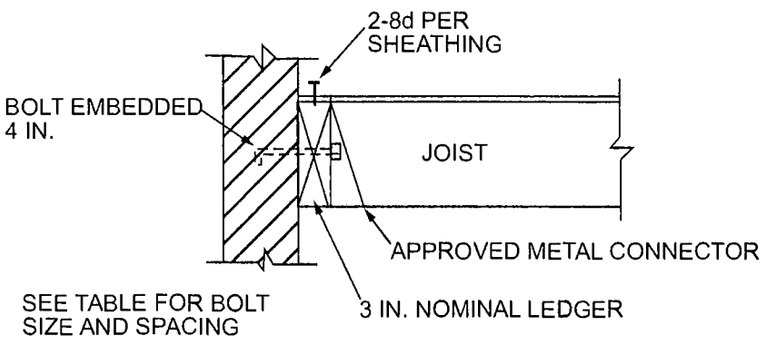

LEDGER BOLT SIZE AND SPACING

JOIST SPAN	BOLT SIZE AND SPACING	
	ROOF	FLOOR
10 FT.	$^1/_2$ AT 2 FT. 6 IN. $^7/_8$ AT 3 FT. 6 IN.	$^1/_2$ AT 2 FT. 0 IN. $^7/_8$ AT 2 FT. 9 IN.
10—15 FT.	$^1/_2$ AT 1 FT. 9 IN. $^7/_8$ AT 2 FT. 6 IN.	$^1/_2$ AT 1 FT. 4 IN. $^7/_8$ AT 2 FT. 0 IN.
15—20 FT.	$^1/_2$ AT 1 FT. 3 IN. $^7/_8$ AT 2 FT. 0 IN.	$^1/_2$ AT 1 FT. 0 IN. $^7/_8$ AT 1 FT. 6 IN.

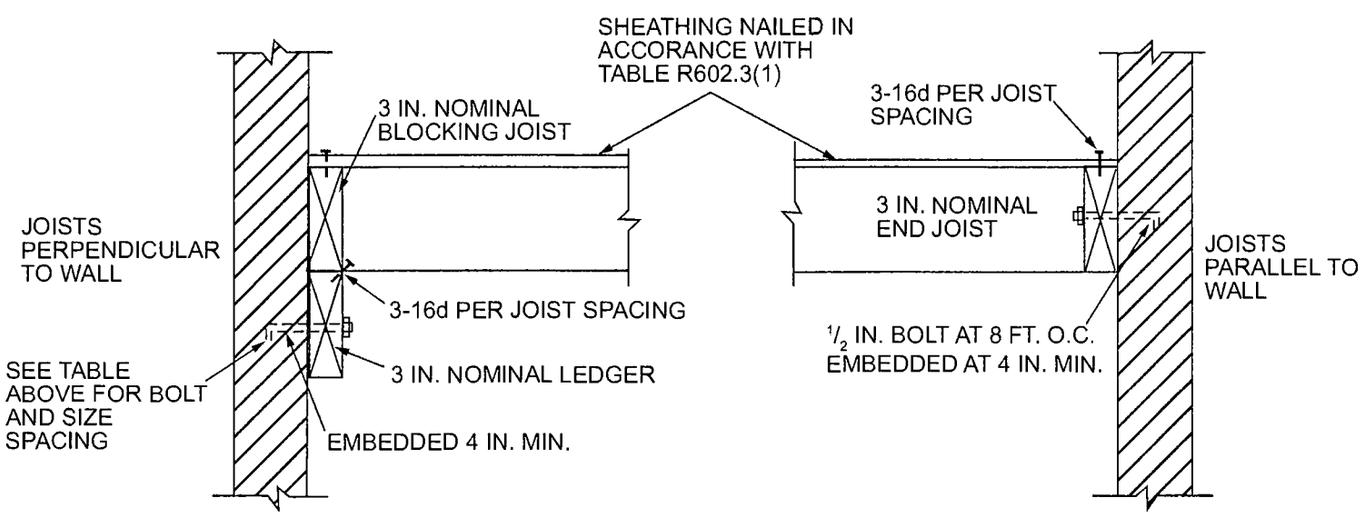

For SI: 1 inch = 25.4 mm, 1 foot = 304.8 mm, 1 pound per square foot = 0.0479 kPa.

Note: Where bolts are located in hollow masonry, the cells in the courses receiving the bolt shall be grouted solid.

FIGURE R606.11(1)
ANCHORAGE REQUIREMENTS FOR MASONRY WALLS LOCATED IN SEISMIC DESIGN CATEGORY A, B OR C AND WHERE WIND LOADS ARE LESS THAN 30 PSF

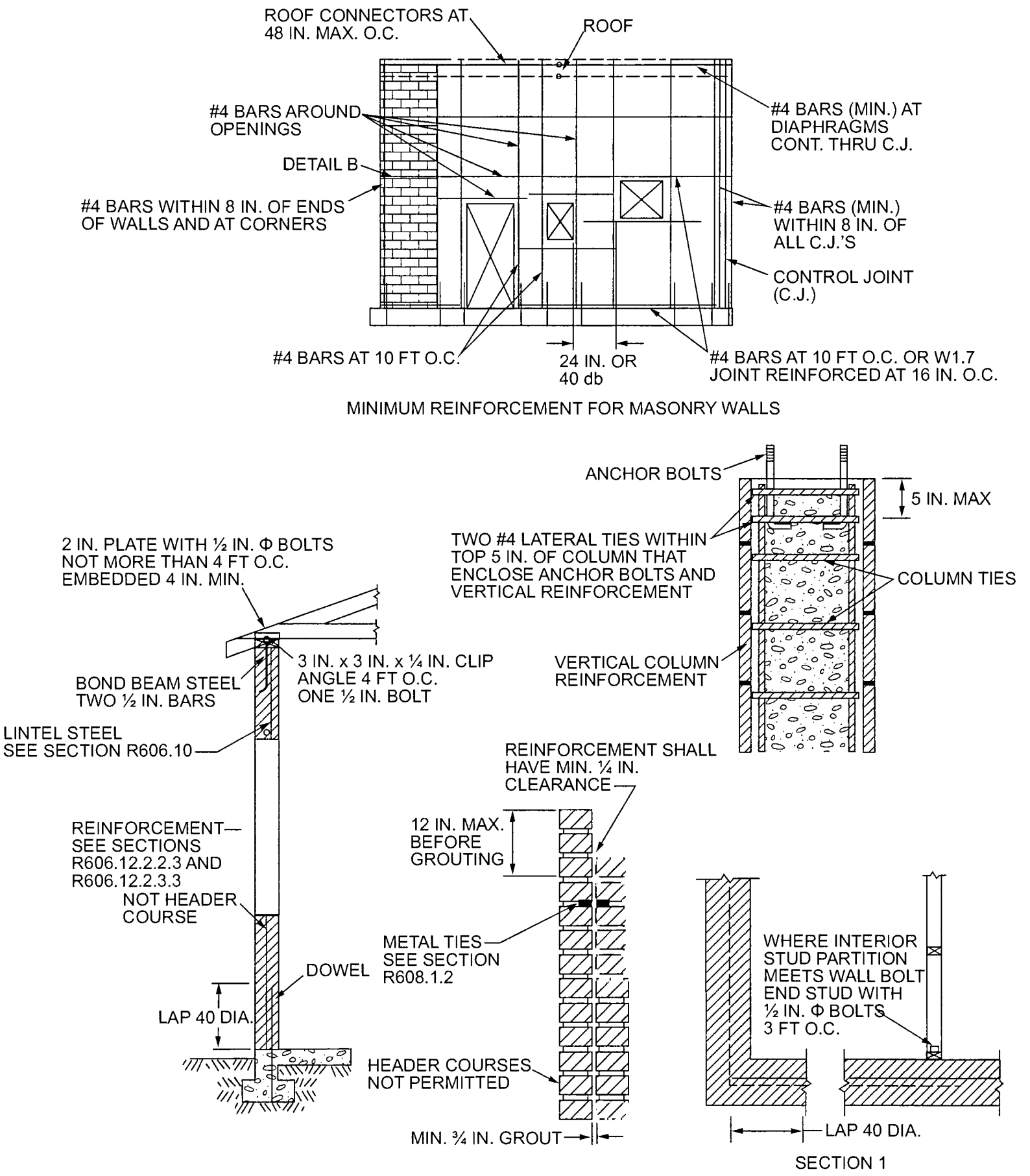

For SI: 1 inch = 25.4 mm, 1 foot = 304.8 mm.

FIGURE R606.11(2)
REQUIREMENTS FOR REINFORCED GROUTED MASONRY CONSTRUCTION IN SEISMIC DESIGN CATEGORY C

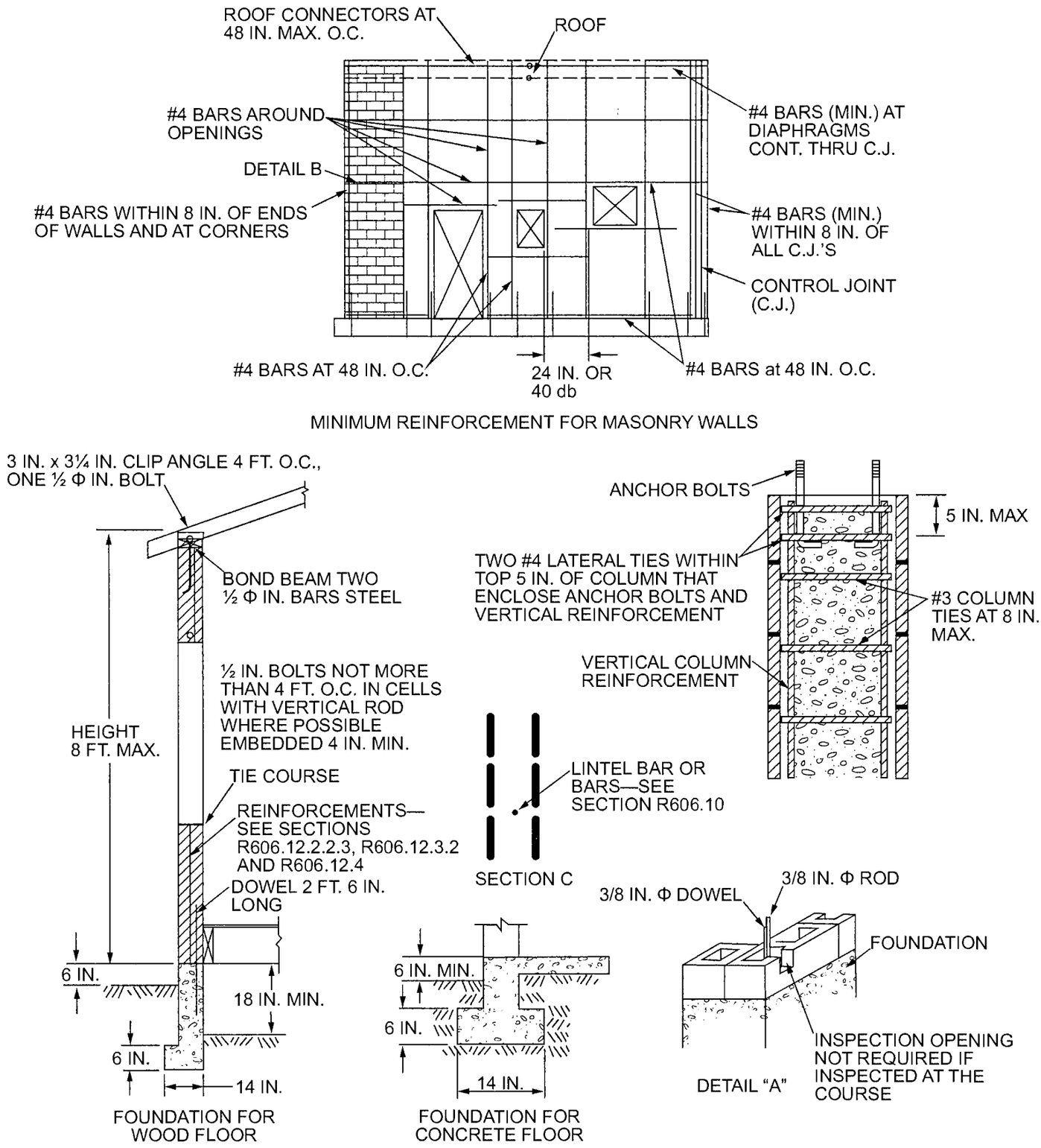

For SI: 1 inch = 25.4 mm, 1 foot = 304.8 mm.

Note: A full bed joint must be provided. Cells containing vertical bars are to be filled to the top of wall and provide inspection opening as shown on detail "A." Horizontal bars are to be laid as shown on detail "B." Lintel bars are to be laid as shown on Section C.

FIGURE R606.11(3)
REQUIREMENTS FOR REINFORCED MASONRY CONSTRUCTION IN SEISMIC DESIGN CATEGORY D_0, D_1 OR D_2

TABLE R606.12.2.1
MINIMUM SOLID WALL LENGTH ALONG EXTERIOR WALL LINES

SESIMIC DESIGN CATEGORY	MINIMUM SOLID WALL LENGTH (percent)[a]		
	One story or top story of two story	Wall supporting light-framed second story and roof	Wall supporting masonry second story and roof
Townhouses in C	20	25	35
D_0 or D_1	25	NP	NP
D_2	30	NP	NP

NP = Not Permitted, except with design in accordance with the *California Building Code*.

a. For all walls, the minimum required length of solid walls shall be based on the table percent multiplied by the dimension, parallel to the wall direction under consideration, of a rectangle inscribing the overall building plan.

R606.12.2.2.2 Masonry partition walls. Masonry partition walls, masonry screen walls and other masonry elements that are not designed to resist vertical or lateral loads, other than those induced by their own weight, shall be isolated from the structure so that vertical and lateral forces are not imparted to these elements. Isolation joints and connectors between these elements and the structure shall be designed to accommodate the design story drift.

R606.12.2.2.3 Reinforcement requirements for masonry elements. Masonry elements listed in Section R606.12.2.2.2 shall be reinforced in either the horizontal or vertical direction as shown in Figure R606.11(2) and in accordance with the following:

1. Horizontal reinforcement. Horizontal joint reinforcement shall consist of not less than two longitudinal W1.7 wires spaced not more than 16 inches (406 mm) for walls greater than 4 inches (102 mm) in width and not less than one longitudinal W1.7 wire spaced not more than 16 inches (406 mm) for walls not exceeding 4 inches (102 mm) in width; or not less than one No. 4 bar spaced not more than 48 inches (1219 mm). Where two longitudinal wires of joint reinforcement are used, the space between these wires shall be the widest that the mortar joint will accommodate. Horizontal reinforcement shall be provided within 16 inches (406 mm) of the top and bottom of these masonry elements.
2. Vertical reinforcement. Vertical reinforcement shall consist of not less than one No. 4 bar spaced not more than 48 inches (1219 mm). Vertical reinforcement shall be located within 16 inches (406 mm) of the ends of masonry walls.

R606.12.2.3 Design of elements part of the lateral force-resisting system.

R606.12.2.3.1 Connections to masonry shear walls. Connectors shall be provided to transfer forces between masonry walls and horizontal elements in accordance with the requirements of Section 4.1.4 of TMS 402. Connectors shall be designed to transfer horizontal design forces acting either perpendicular or parallel to the wall, but not less than 200 pounds per linear foot (2919 N/m) of wall. The maximum spacing between connectors shall be 4 feet (1219 mm). Such anchorage mechanisms shall not induce tension stresses perpendicular to grain in ledgers or nailers.

R606.12.2.3.2 Connections to masonry columns. Connectors shall be provided to transfer forces between masonry columns and horizontal elements in accordance with the requirements of Section 4.1.4 of TMS 402. Where anchor bolts are used to connect horizontal elements to the tops of columns, the bolts shall be placed within lateral ties. Lateral ties shall enclose both the vertical bars in the column and the anchor bolts. There shall be not less than two No. 4 lateral ties provided in the top 5 inches (127 mm) of the column.

R606.12.2.3.3 Minimum reinforcement requirements for masonry shear walls. Vertical reinforcement of not less than one No. 4 bar shall be provided at corners, within 16 inches (406 mm) of each side

TABLE R606.12.3.2
MINIMUM DISTRIBUTED WALL REINFORCEMENT FOR BUILDINGS ASSIGNED TO SEISMIC DESIGN CATEGORY D_0 or D_1

NOMINAL WALL THICKNESS (inches)	MINIMUM SUM OF THE VERTICAL AND HORIZONTAL REINFORCEMENT AREAS[a] (square Inches per foot)	MINIMUM REINFORCEMENT AS DISTRIBUTED IN BOTH HORIZONTAL AND VERTICAL DIRECTIONS[b] (square Inches per foot)	MINUMUM BAR SIZE FOR REINFORCEMENT SPACED AT 48 INCHES
6	0.135	0.047	#4
8	0.183	0.064	#5
10	0.231	0.081	#6
12	0.279	0.098	#6

For SI: 1 inch = 25.4 mm, 1 foot = 304.8 mm, 1 square inch per foot = 2064 mm^2/m.

a. Based on the minimum reinforcing ratio of 0.002 times the gross cross-sectional area of the wall.

b. Based on the minimum reinforcing ratio each direction of 0.0007 times the gross cross-sectional area of the wall.

of movement joints, within 8 inches (203 mm) of the ends of walls, and at a maximum spacing of 10 feet (3048 mm).

Horizontal joint reinforcement shall consist of not less than two wires of W1.7 spaced not more than 16 inches (406 mm); or bond beam reinforcement of not less than one No. 4 bar spaced not more than 10 feet (3048 mm) shall be provided. Horizontal reinforcement shall be provided at the bottom and top of wall openings and shall extend not less than 24 inches (610 mm) nor less than 40 bar diameters past the opening; continuously at structurally connected roof and floor levels; and within 16 inches (406 mm) of the top of walls.

R606.12.3 Seismic Design Category D_0 or D_1. Structures in Seismic Design Category D_0 or D_1 shall comply with the requirements of Seismic Design Category C and the additional requirements of this section. AAC masonry shall not be used for the design of masonry elements that are part of the lateral force-resisting system.

R606.12.3.1 Design requirements. Masonry elements other than those covered by Section R606.12.2.2.2 shall be designed in accordance with the requirements of Chapters 1 through 7 and Sections 8.1 and 8.3 of TMS 402, ACI 530/ASCE 5 and shall meet the minimum reinforcement requirements contained in Sections R606.12.3.2 and R606.12.3.2.1. Otherwise, masonry shall be designed in accordance with TMS 403.

Exception: Masonry walls limited to one story in height and 9 feet (2743 mm) between lateral supports need not be designed provided they comply with the minimum reinforcement requirements of Sections R606.12.3.2 and R606.12.3.2.1.

R606.12.3.2 Minimum reinforcement requirements for masonry walls. Masonry walls other than those covered by Section R606.12.2.2.3 shall be reinforced in both the vertical and horizontal direction. The sum of the cross-sectional area of horizontal and vertical reinforcement shall be not less than 0.002 times the gross cross-sectional area of the wall, and the minimum cross-sectional area in each direction shall be not less than 0.0007 times the gross cross-sectional area of the wall. Reinforcement shall be uniformly distributed. Table R606.12.3.2 shows the minimum reinforcing bar sizes required for varying thicknesses of masonry walls. The maximum spacing of reinforcement shall be 48 inches (1219 mm) provided that the walls are solid grouted and constructed of hollow open-end units, hollow units laid with full head joints or two wythes of solid units. The maximum spacing of reinforcement shall be 24 inches (610 mm) for all other masonry.

R606.12.3.2.1 Shear wall reinforcement requirements. The maximum spacing of vertical and horizontal reinforcement shall be the smaller of one-third the length of the shear wall, one-third the height of the shear wall, or 48 inches (1219 mm). The minimum cross-sectional area of vertical reinforcement shall be one-third of the required shear reinforcement. Shear reinforcement shall be anchored around vertical reinforcing bars with a standard hook.

R606.12.3.3 Minimum reinforcement for masonry columns. Lateral ties in masonry columns shall be spaced not more than 8 inches (203 mm) on center and shall be not less than $^3/_8$-inch (9.5 mm) diameter. Lateral ties shall be embedded in grout.

R606.12.3.4 Material restrictions. Type N mortar or masonry cement shall not be used as part of the lateral force-resisting system.

R606.12.3.5 Lateral tie anchorage. Standard hooks for lateral tie anchorage shall be either a 135-degree (2.4 rad) standard hook or a 180-degree (3.2 rad) standard hook.

R606.12.4 Seismic Design Category D_2. Structures in Seismic Design Category D_2 shall comply with the requirements of Seismic Design Category D_1 and to the additional requirements of this section.

R606.12.4.1 Design of elements not part of the lateral force-resisting system. Stack bond masonry that is not part of the lateral force-resisting system shall have a horizontal cross-sectional area of reinforcement of not less than 0.0015 times the gross cross-sectional area of masonry. Table R606.12.4.1 shows minimum reinforcing bar sizes for masonry walls. The maximum spacing of horizontal reinforcement shall be 24 inches (610 mm). These elements shall be solidly grouted and shall be constructed of hollow open-end units or two wythes of solid units.

TABLE R606.12.4.1
MINIMUM REINFORCING FOR STACKED BONDED MASONRY WALLS IN SEISMIC DESIGN CATEGORY D_2

NOMINAL WALL THICKNESS (Inches)	MINIMUM BAR SIZE SPACED AT 24 INCHES
6	#4
8	#5
10	#5
12	#6

For SI: 1 inch = 25.4 mm.

R606.12.4.2 Design of elements part of the lateral force-resisting system. Stack bond masonry that is part of the lateral force-resisting system shall have a horizontal cross-sectional area of reinforcement of not less than 0.0025 times the gross cross-sectional area of masonry. Table R606.12.4.2 shows minimum reinforcing bar sizes for masonry walls. The maximum spacing of horizontal reinforcement shall be 16 inches (406 mm). These elements shall be solidly grouted and shall be constructed of hollow open-end units or two wythes of solid units.

TABLE R606.12.4.2
MINIMUM REINFORCING FOR STACKED BONDED MASONRY WALLS IN SEISMIC DESIGN CATEGORY D_2

NOMINAL WALL THICKNESS (Inches)	MINIMUM BAR SIZE SPACED AT 16 INCHES
6	#4
8	#5
10	#5
12	#6

For SI: 1 inch = 25.4 mm.

R606.13 Multiple-wythe masonry. The facing and backing of multiple-wythe masonry walls shall be bonded in accordance with Section R606.13.1, R606.13.2 or R606.13.3. In cavity walls, neither the facing nor the backing shall be less than 3 inches (76 mm) nominal in thickness and the cavity shall be not more than 4 inches (102 mm) nominal in width. The backing shall not be less than the thickness of the facing.

Exception: Cavities shall be permitted to exceed the 4-inch (102 mm) nominal dimension provided that tie size and tie spacing have been established by calculation.

R606.13.1 Bonding with masonry headers. Bonding with solid or hollow masonry headers shall comply with Sections R606.13.1.1 and R606.13.1.2.

R606.13.1.1 Solid units. Where the facing and backing (adjacent wythes) of solid masonry construction are bonded by means of masonry headers, not less than 4 percent of the wall surface of each face shall be composed of headers extending not less than 3 inches (76 mm) into the backing. The distance between adjacent full-length headers shall not exceed 24 inches (610 mm) either vertically or horizontally. In walls in which a single header does not extend through the wall, headers from the opposite sides shall overlap not less than 3 inches (76 mm), or headers from opposite sides shall be covered with another header course overlapping the header below not less than 3 inches (76 mm).

R606.13.1.2 Hollow units. Where two or more hollow units are used to make up the thickness of a wall, the stretcher courses shall be bonded at vertical intervals not exceeding 34 inches (864 mm) by lapping not less than 3 inches (76 mm) over the unit below, or by lapping at vertical intervals not exceeding 17 inches (432 mm) with units that are not less than 50 percent thicker than the units below.

R606.13.2 Bonding with wall ties or joint reinforcement. Bonding with wall ties or joint reinforcement shall comply with Section R606.13.2.3.

R606.13.2.1 Bonding with wall ties. Bonding with wall ties, except as required by Section R607, where the facing and backing (adjacent wythes) of masonry walls are bonded with $^{3}/_{16}$-inch-diameter (5 mm) wall ties embedded in the horizontal mortar joints, there shall be not less than one metal tie for each $4^{1}/_{2}$ square feet (0.418 m^2) of wall area. Ties in alternate courses shall be staggered. The maximum vertical distance between ties shall not exceed 24 inches (610 mm), and the maximum horizontal distance shall not exceed 36 inches (914 mm). Rods or ties bent to rectangular shape shall be used with hollow masonry units laid with the cells vertical. In other walls, the ends of ties shall be bent to 90-degree (0.79 rad) angles to provide hooks not less than 2 inches (51 mm) long. Additional bonding ties shall be provided at all openings, spaced not more than 3 feet (914 mm) apart around the perimeter and within 12 inches (305 mm) of the opening.

R606.13.2.2 Bonding with adjustable wall ties. Where the facing and backing (adjacent wythes) of masonry are bonded with adjustable wall ties, there shall be not less than one tie for each 2.67 square feet (0.248 m^2) of wall area. Neither the vertical nor the horizontal spacing of the adjustable wall ties shall exceed 24 inches (610 mm). The maximum vertical offset of bed joints from one wythe to the other shall be 1.25 inches (32 mm). The maximum clearance between connecting parts of the ties shall be $^{1}/_{16}$ inch (2 mm). Where pintle legs are used, ties shall have not less than two $^{3}/_{16}$-inch-diameter (5 mm) legs.

R606.13.2.3 Bonding with prefabricated joint reinforcement. Where the facing and backing (adjacent wythes) of masonry are bonded with prefabricated joint reinforcement, there shall be not less than one cross wire serving as a tie for each 2.67 square feet (0.248 m^2) of wall area. The vertical spacing of the joint reinforcement shall not exceed 16 inches (406 mm). Cross wires on prefabricated joint reinforcement shall not be smaller than No. 9 gage. The longitudinal wires shall be embedded in the mortar.

R606.13.3 Bonding with natural or cast stone. Bonding with natural and cast stone shall conform to Sections R606.13.3.1 and R606.13.3.2.

R606.13.3.1 Ashlar masonry. In ashlar masonry, bonder units, uniformly distributed, shall be provided to the extent of not less than 10 percent of the wall area. Such bonder units shall extend not less than 4 inches (102 mm) into the backing wall.

R606.13.3.2 Rubble stone masonry. Rubble stone masonry 24 inches (610 mm) or less in thickness shall have bonder units with a maximum spacing of 3 feet (914 mm) vertically and 3 feet (914 mm) horizontally, and if the masonry is of greater thickness than 24 inches (610 mm), shall have one bonder unit for each 6 square feet (0.557 m^2) of wall surface on both sides.

R606.14 Anchored and adhered masonry veneer.

R606.14.1 Anchored veneer. Anchored masonry veneer installed over a backing of wood or cold-formed steel shall meet the requirements of Section R703.8.

R606.14.2 Adhered veneer. Adhered masonry veneer shall be installed in accordance with the requirements of Section R703.12.

SECTION R607
GLASS UNIT MASONRY

R607.1 General. Panels of glass unit masonry located in load-bearing and nonload-bearing exterior and interior walls shall be constructed in accordance with this section.

R607.2 Materials. Hollow glass units shall be partially evacuated and have a minimum average glass face thickness of $^{3}/_{16}$ inch (5 mm). The surface of units in contact with mortar shall be treated with a polyvinyl butyral coating or latex-based paint. The use of reclaimed units is prohibited.

R607.3 Units. Hollow or solid glass block units shall be standard or thin units.

R607.3.1 Standard units. The specified thickness of standard units shall be not less than $3^{7}/_{8}$ inches (98 mm).

R607.3.2 Thin units. The specified thickness of thin units shall be not less than $3^1/_8$ inches (79 mm) for hollow units and not less than 3 inches (76 mm) for solid units.

R607.4 Isolated panels. Isolated panels of glass unit masonry shall conform to the requirements of this section.

R607.4.1 Exterior standard-unit panels. The maximum area of each individual standard-unit panel shall be 144 square feet (13.4 m^2) where the design wind pressure is 20 pounds per square foot (958 Pa). The maximum area of such panels subjected to design wind pressures other than 20 pounds per square foot (958 Pa) shall be in accordance with Figure R607.4.1. The maximum panel dimension between structural supports shall be 25 feet (7620 mm) in width or 20 feet (6096 mm) in height.

R607.4.2 Exterior thin-unit panels. The maximum area of each individual thin-unit panel shall be 85 square feet (7.9 m^2). The maximum dimension between structural supports shall be 15 feet (4572 mm) in width or 10 feet (3048 mm) in height. Thin units shall not be used in applications where the design wind pressure as stated in Table R301.2(2) exceeds 20 pounds per square foot (958 Pa).

R607.4.3 Interior panels. The maximum area of each individual standard-unit panel shall be 250 square feet (23.2 m^2). The maximum area of each thin-unit panel shall be 150 square feet (13.9 m^2). The maximum dimension between structural supports shall be 25 feet (7620 mm) in width or 20 feet (6096 mm) in height.

R607.4.4 Curved panels. The width of curved panels shall conform to the requirements of Sections R607.4.1, R607.4.2 and R607.4.3, except additional structural supports shall be provided at locations where a curved section joins a straight section, and at inflection points in multiple-curve walls.

R607.5 Panel support. Glass unit masonry panels shall conform to the support requirements of this section.

R607.5.1 Deflection. The maximum total deflection of structural members that support glass unit masonry shall not exceed $^1/_{600}$.

R607.5.2 Lateral support. Glass unit masonry panels shall be laterally supported along the top and sides of the panel. Lateral supports for glass unit masonry panels shall be designed to resist not less than 200 pounds per lineal feet (2918 N/m) of panel, or the actual applied loads, whichever is greater. Except for single-unit panels, lateral support shall be provided by panel anchors along the top and sides spaced not greater than 16 inches (406 mm) on center or by channel-type restraints. Single-unit panels shall be supported by channel-type restraints.

Exceptions:

1. Lateral support is not required at the top of panels that are one unit wide.
2. Lateral support is not required at the sides of panels that are one unit high.

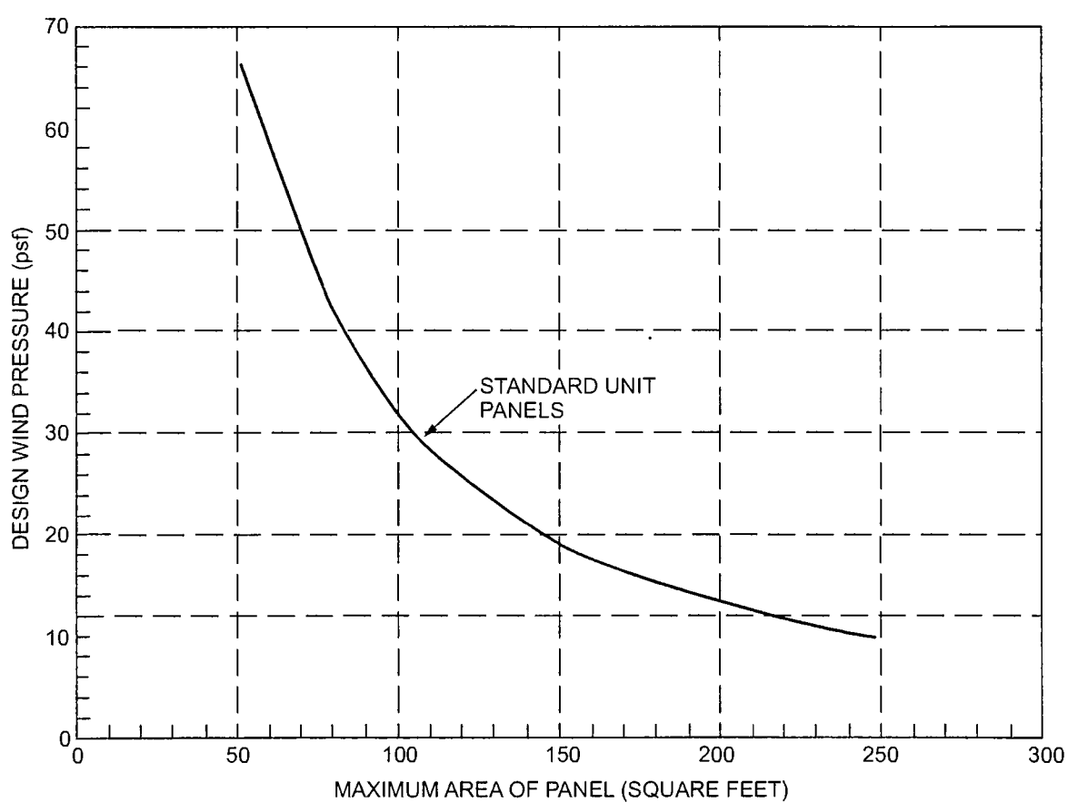

For SI: 1 square foot = 0.0929 m^2, 1 pound per square foot = 0.0479 kPa.

FIGURE R607.4.1
GLASS UNIT MASONRY DESIGN WIND LOAD RESISTANCE

R607.5.2.1 Panel anchor restraints. Panel anchors shall be spaced not greater than 16 inches (406 mm) on center in both jambs and across the head. Panel anchors shall be embedded not less than 12 inches (305 mm) and shall be provided with two fasteners so as to resist the loads specified in Section R607.5.2.

R607.5.2.2 Channel-type restraints. Glass unit masonry panels shall be recessed not less than 1 inch (25 mm) within channels and chases. Channel-type restraints shall be oversized to accommodate expansion material in the opening, packing and sealant between the framing restraints, and the glass unit masonry perimeter units.

R607.6 Sills. Before the bedding of glass units, the sill area shall be covered with a water-base asphaltic emulsion coating. The coating shall be not less than $^1/_8$ inch (3 mm) thick.

R607.7 Expansion joints. Glass unit masonry panels shall be provided with expansion joints along the top and sides at all structural supports. Expansion joints shall be not less than $^3/_8$ inch (10 mm) in thickness and shall have sufficient thickness to accommodate displacements of the supporting structure. Expansion joints shall be entirely free of mortar and other debris and shall be filled with resilient material.

R607.8 Mortar. Glass unit masonry shall be laid with Type S or N mortar. Mortar shall not be retempered after initial set. Mortar unused within $1^1/_2$ hours after initial mixing shall be discarded.

R607.9 Reinforcement. Glass unit masonry panels shall have horizontal joint reinforcement spaced not greater than 16 inches (406 mm) on center located in the mortar bed joint. Horizontal joint reinforcement shall extend the entire length of the panel but shall not extend across expansion joints. Longitudinal wires shall be lapped not less than 6 inches (152 mm) at splices. Joint reinforcement shall be placed in the bed joint immediately below and above openings in the panel. The reinforcement shall have not less than two parallel longitudinal wires of size W1.7 or greater, and have welded cross wires of size W1.7 or greater.

R607.10 Placement. Glass units shall be placed so head and bed joints are filled solidly. Mortar shall not be furrowed. Head and bed joints of glass unit masonry shall be $^1/_4$ inch (6.4 mm) thick, except that vertical joint thickness of radial panels shall be not less than $^1/_8$ inch (3 mm) or greater than $^5/_8$ inch (16 mm). The bed joint thickness tolerance shall be minus $^1/_{16}$ inch (1.6 mm) and plus $^1/_8$ inch (3 mm). The head joint thickness tolerance shall be plus or minus $^1/_8$ inch (3 mm).

SECTION R608
EXTERIOR CONCRETE WALL CONSTRUCTION

R608.1 General. Exterior concrete walls shall be designed and constructed in accordance with the provisions of this section or in accordance with the provisions of PCA 100 or ACI 318. Where PCA 100, ACI 318 or the provisions of this section are used to design concrete walls, project drawings, typical details and specifications *shall not exempt construction documents from the requirement to be stamped by a California licensed architect or engineer. Notwithstanding other sections of law, the law establishing these provisions is found in Business and Professions Code Sections 5537.1 and 6737.1.*

R608.1.1 Interior construction. These provisions are based on the assumption that interior walls and partitions, both load-bearing and nonload-bearing, floors and roof/ceiling assemblies are constructed of light-framed construction complying with the limitations of this code and the additional limitations of Section R608.2. Design and construction of light-framed assemblies shall be in accordance with the applicable provisions of this code. Where second-story exterior walls are of light-framed construction, they shall be designed and constructed as required by this code.

Aspects of concrete construction not specifically addressed by this code, including interior concrete walls, shall comply with ACI 318.

R608.1.2 Other concrete walls. Exterior concrete walls constructed in accordance with this code shall comply with the shapes and minimum concrete cross-sectional dimensions of Table R608.3. Other types of forming systems resulting in concrete walls not in compliance with this section shall be designed in accordance with ACI 318.

R608.2 Applicability limits. The provisions of this section shall apply to the construction of exterior concrete walls for buildings not greater than 60 feet (18 288 mm) in plan dimensions, floors with clear spans not greater than 32 feet (9754 mm) and roofs with clear spans not greater than 40 feet (12 192 mm). Buildings shall not exceed 35 feet (10 668 mm) in mean roof height or two stories in height above grade. Floor/ceiling dead loads shall not exceed 10 pounds per square foot (479 Pa), roof/ceiling dead loads shall not exceed 15 pounds per square foot (718 Pa) and attic live loads shall not exceed 20 pounds per square foot (958 Pa). Roof overhangs shall not exceed 2 feet (610 mm) of horizontal projection beyond the exterior wall and the dead load of the overhangs shall not exceed 8 pounds per square foot (383 Pa).

Walls constructed in accordance with the provisions of this section shall be limited to buildings subjected to a maximum design wind speed of 160 mph (72 m/s) Exposure B, 136 mph (61 m/s) Exposure C and 125 mph (56 m/s) Exposure D. Walls constructed in accordance with the provisions of this section shall be limited to detached one- and two-family dwellings and townhouses assigned to Seismic Design Category A or B, and detached one- and two-family dwellings assigned to Seismic Design Category C.

Buildings that are not within the scope of this section shall be designed in accordance with PCA 100 or ACI 318.

R608.3 Concrete wall systems. Concrete walls constructed in accordance with these provisions shall comply with the shapes and minimum concrete cross-sectional dimensions of Table R608.3.

R608.3.1 Flat wall systems. Flat concrete wall systems shall comply with Table R608.3 and Figure R608.3(1) and have a minimum nominal thickness of 4 inches (102 mm).

R608.3.2 Waffle-grid wall systems. Waffle-grid wall systems shall comply with Table R608.3 and Figure R608.3(2) and shall have a minimum nominal thickness of 6 inches (152 mm) for the horizontal and vertical concrete members (cores). The core and web dimensions shall comply with Table R608. 3. The maximum weight of waffle-grid walls shall comply with Table R608.3.

TABLE R608.3
DIMENSIONAL REQUIREMENTS FOR WALLS[a]

WALL TYPE AND NOMINAL THICKNESS	MAXIMUM WALL WEIGHT[b] (psf)	MINIMUM WIDTH, W, OF VERTICAL CORES (inches)	MINIMUM THICKNESS, T, OF VERTICAL CORES (inches)	MAXIMUM SPACING OF VERTICAL CORES (Inches)	MAXIMUM SPACING OF HORIZONTAL CORES (Inches)	MINIMUM WEB THICKNESS (Inches)
4″ Flat[c]	50	NA	NA	NA	NA	NA
6″ Flat[c]	75	NA	NA	NA	NA	NA
8″ Flat[c]	100	NA	NA	NA	NA	NA
10″ Flat[c]	125	NA	NA	NA	NA	NA
6″ Waffle-grid	56	8[d]	5.5[d]	12	16	2
8″ Waffle-grid	76	8[e]	8[e]	12	16	2
6″ Screen-grid	53	6.25[f]	6.25[f]	12	12	NA

For SI: 1 inch = 25.4 mm; 1 pound per square foot = 0.0479 kPa, 1 pound per cubic foot = 2402.77 kg/m^3, 1 square inch = 645.16 mm^2, 1 inch^4 = 42 cm^4.

NA = Not Applicable.

a. Width "W," thickness "T," spacing and web thickness, refer to Figures R608.3(2) and R608.3(3).

b. Wall weight is based on a unit weight of concrete of 150 pcf. For flat walls the weight is based on the nominal thickness. The tabulated values do not include any allowance for interior and exterior finishes.

c. Nominal wall thickness. The actual as-built thickness of a flat wall shall not be more than $^1/_2$ inch less or more than $^1/_4$ inch more than the nominal dimension indicated.

d. Vertical core is assumed to be elliptical-shaped. Another shape of core is permitted provided the minimum thickness is 5 inches, the moment of inertia, *I*, about the centerline of the wall (ignoring the web) is not less than 65 inch^4, and the area, *A*, is not less than 31.25 square inches. The width used to calculate *A* and *I* shall not exceed 8 inches.

e. Vertical core is assumed to be circular. Another shape of core is permitted provided the minimum thickness is 7 inches, the moment of inertia, *I*, about the centerline of the wall (ignoring the web) is not less than 200 inch^4, and the area, *A*, is not less than 49 square inches. The width used to calculate *A* and *I* shall not exceed 8 inches.

f. Vertical core is assumed to be circular. Another shape of core is permitted provided the minimum thickness is 5.5 inches, the moment of inertia, *I*, about the centerline of the wall is not less than 76 inch^4, and the area, *A*, is not less than 30.25 square inches. The width used to calculate *A* and *I* shall not exceed 6.25 inches.

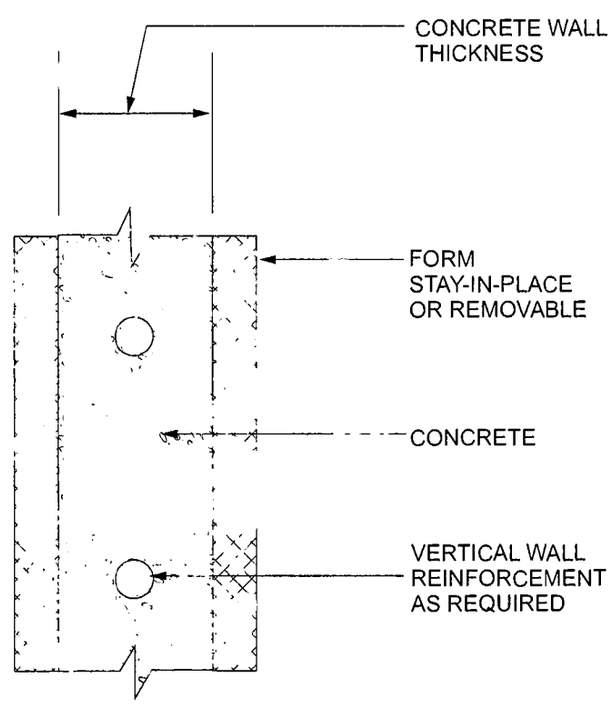

SEE TABLE 608.3 FOR MINIMUM DIMENSIONS

FIGURE R608.3(1)
FLAT WALL SYSTEM

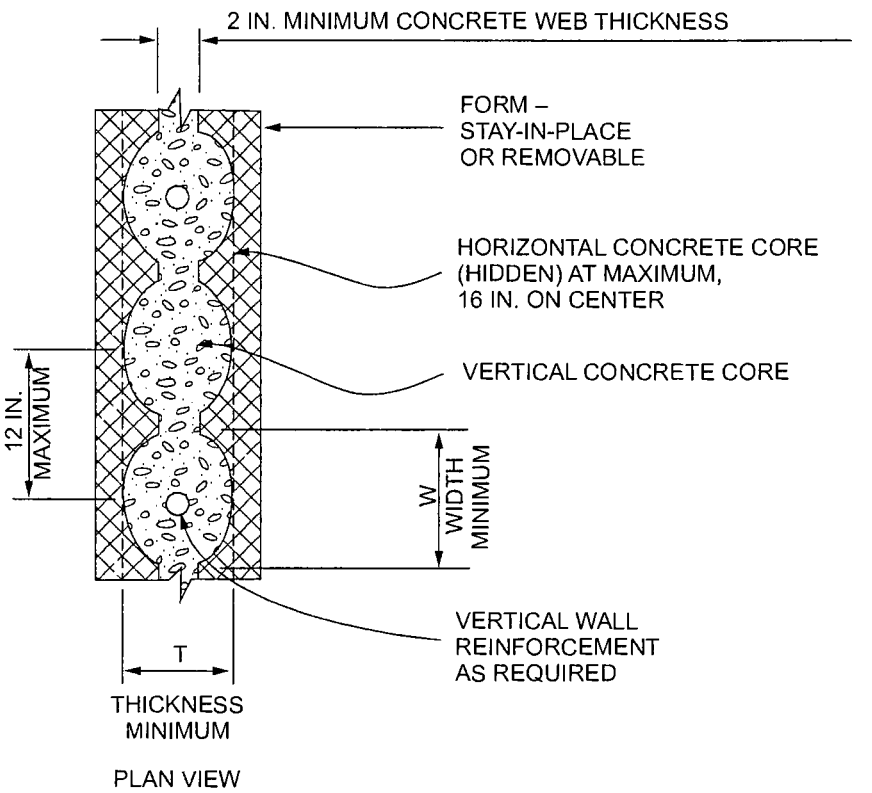

For SI: 1 inch = 25.4 mm.

FIGURE R608.3(2)
WAFFLE-GRID WALL SYSTEM

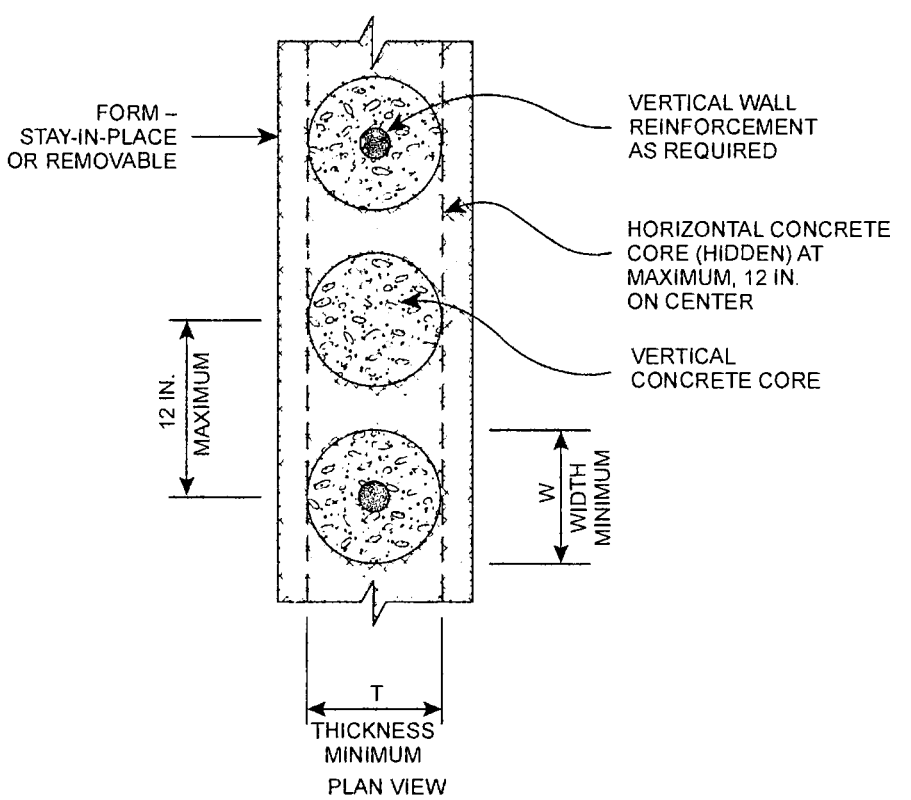

For SI: 1 inch = 25.4 mm.

FIGURE R608.3(3)
SCREEN-GRID WALL SYSTEM

R608.3.3 Screen-grid wall systems. Screen-grid wall systems shall comply with Table R608.3 and Figure R608.3(3) and shall have a minimum nominal thickness of 6 inches (152 mm) for the horizontal and vertical concrete members (cores). The core dimensions shall comply with Table R608.3. The maximum weight of screen-grid walls shall comply with Table R608.3.

R608.4 Stay-in-place forms. Stay-in-place concrete forms shall comply with this section.

R608.4.1 Surface burning characteristics. The flame spread index and smoke-developed index of forming material, other than foam plastic, left exposed on the interior shall comply with Section R302.9. The surface burning characteristics of foam plastic used in insulating concrete forms shall comply with Section R316.3.

R608.4.2 Interior covering. Stay-in-place forms constructed of rigid foam plastic shall be protected on the interior of the building as required by Sections R316.4 and R702.3.4. Where gypsum board is used to protect the foam plastic, it shall be installed with a mechanical fastening system. Use of adhesives is permitted in addition to mechanical fasteners.

R608.4.3 Exterior wall covering. Stay-in-place forms constructed of rigid foam plastics shall be protected from sunlight and physical damage by the application of an approved exterior wall covering complying with this code. Exterior surfaces of other stay-in-place forming systems shall be protected in accordance with this code.

Requirements for installation of masonry veneer, stucco and other finishes on the exterior of concrete walls and other construction details not covered in this section shall comply with the requirements of this code.

R608.4.4 Flat ICF wall systems. Flat ICF wall system forms shall conform to ASTM E2634.

R608.5 Materials. Materials used in the construction of concrete walls shall comply with this section.

R608.5.1 Concrete and materials for concrete. Materials used in concrete, and the concrete itself, shall conform to requirements of this section, PCA 100 or ACI 318.

R608.5.1.1 Cements. The following standards as referenced in Chapter 44 shall be permitted to be used.

1. ASTM C150
2. ASTM C595
3. ASTM C1157

R608.5.1.2 Concrete mixing and delivery. Mixing and delivery of concrete shall comply with ASTM C94 or ASTM C685.

R608.5.1.3 Maximum aggregate size. The nominal maximum size of coarse aggregate shall not exceed one-fifth the narrowest distance between sides of forms, or three-fourths the clear spacing between reinforcing bars or between a bar and the side of the form.

Exception: When approved, these limitations shall not apply where removable forms are used and workability and methods of consolidation permit concrete to be placed without honeycombs or voids.

R608.5.1.4 Proportioning and slump of concrete. Proportions of materials for concrete shall be established to provide workability and consistency to permit concrete to be worked readily into forms and around reinforcement under conditions of placement to be employed, without segregation or excessive bleeding. Slump of concrete placed in removable forms shall not exceed 6 inches (152 mm).

Exception: When approved, the slump is permitted to exceed 6 inches (152 mm) for concrete mixtures that are resistant to segregation, and are in accordance with the form manufacturer's recommendations.

Slump of concrete placed in stay-in-place forms shall exceed 6 inches (152 mm). Slump of concrete shall be determined in accordance with ASTM C143.

R608.5.1.5 Compressive strength. The minimum specified compressive strength of concrete, f'_c, shall comply with Section R402.2 and shall be not less than 2,500 pounds per square inch (17.2 MPa) at 28 days.

R608.5.1.6 Consolidation of concrete. Concrete shall be consolidated by suitable means during placement and shall be worked around embedded items and reinforcement and into corners of forms. Where stay-in-place forms are used, concrete shall be consolidated by internal vibration.

Exception: When approved, self-consolidating concrete mixtures with slumps equal to or greater than 8 inches (203 mm) that are specifically designed for placement without internal vibration need not be internally vibrated.

R608.5.2 Steel reinforcement and anchor bolts.

R608.5.2.1 Steel reinforcement. Steel reinforcement shall comply with ASTM A615, ASTM A706, or ASTM A996. ASTM A996 bars produced from rail steel shall be Type R.

R608.5.2.2 Anchor bolts. Anchor bolts for use with connection details in accordance with Figures R608.9(1) through R608.9(12) shall be bolts with heads complying with ASTM A307 or ASTM F1554. ASTM A307 bolts shall be Grade A with heads. ASTM F1554 bolts shall be Grade 36 minimum. Instead of bolts with heads, it is permissible to use rods with threads on both ends fabricated from steel complying with ASTM A36. The threaded end of the rod to be embedded in the concrete shall be provided with a hex or square nut.

R608.5.2.3 Sheet steel angles and tension tie straps. Angles and tension tie straps for use with connection details in accordance with Figures R608.9(1) through R608.9(12) shall be fabricated from sheet steel complying with ASTM A653 SS, ASTM A792 SS, or ASTM A875 SS. The steel shall be minimum Grade 33 unless a higher grade is required by the applicable figure.

R608.5.3 Form materials and form ties. Forms shall be made of wood, steel, aluminum, plastic, a composite of cement and foam insulation, a composite of cement and wood chips, or other approved material suitable for supporting and containing concrete. Forms shall provide sufficient strength to contain concrete during the concrete placement operation.

Form ties shall be steel, solid plastic, foam plastic, a composite of cement and wood chips, a composite of cement and foam plastic, or other suitable material capable of resisting the forces created by fluid pressure of fresh concrete.

R608.5.4 Reinforcement installation details.

R608.5.4.1 Support and cover. Reinforcement shall be secured in the proper location in the forms with tie wire or other bar support system such that displacement will not occur during the concrete placement operation. Steel reinforcement in concrete cast against the earth shall have a minimum cover of 3 inches (76 mm). Minimum cover for reinforcement in concrete cast in removable forms that will be exposed to the earth or weather shall be $1^1/_2$ inches (38 mm) for No. 5 bars and smaller, and 2 inches (50 mm) for No. 6 bars and larger. For concrete cast in removable forms that will not be exposed to the earth or weather, and for concrete cast in stay-in-place forms, minimum cover shall be $^3/_4$ inch (19 mm). The minus tolerance for cover shall not exceed the smaller of one-third the required cover and $^3/_8$ inch (10 mm). See Section R608.5.4.4 for cover requirements for hooks of bars developed in tension.

TABLE R608.5.4(1)
LAP SPLICE AND TENSION DEVELOPMENT LENGTHS

	BAR SIZE NO.	YIELD STRENGTH OF STEEL, f_y- psi (MPa)	
		40,000 (280)	60,000 (420)
		Splice length or tension development length (Inches)	
Lap splice length-tension	4	20	30
	5	25	38
	6	30	45
Tension development length for straight bar	4	15	23
	5	19	28
	6	23	34
Tension development length for: a.90-degree and 180-degree standard hooks with not less than $2^1/_2$ inches of side cover perpendicular to plane of hook, and b.90-degree standard hooks with not less than 2 inches of cover on the bar extension beyond the hook.	4	6	9
	5	7	11
	6	8	13
Tension development length for bar with 90-degree or 180-degree standard hook having less cover than required in Items a and b.	4	8	12
	5	10	15
	6	12	18

For SI: 1 inch = 25.4 mm, 1 degree = 0.0175 rad, 1 pound per square inch = 6.895 kPa.

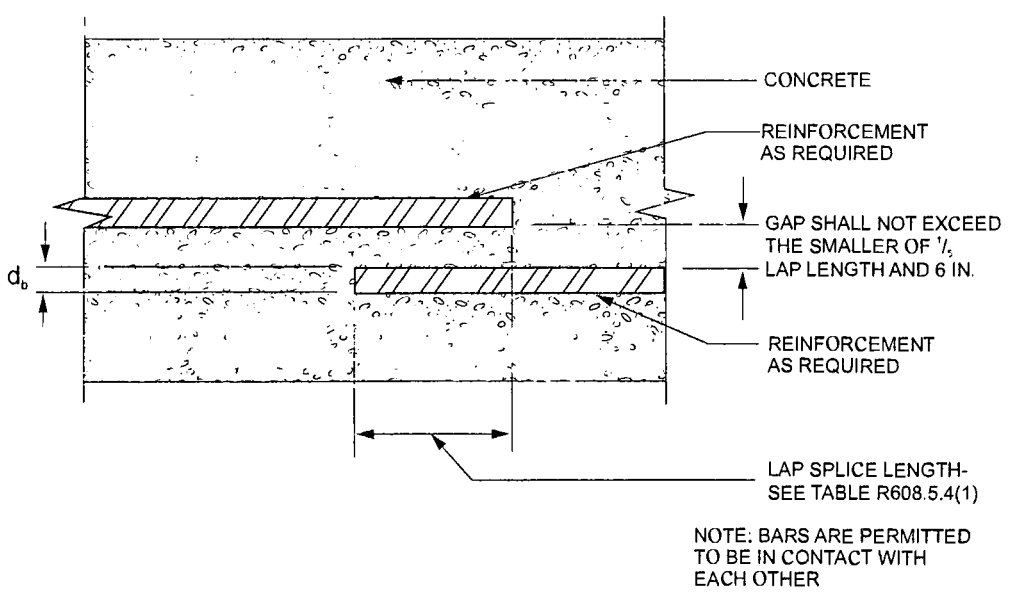

For SI: 1 inch = 25.4 mm.

FIGURE R608.5.4(1)
LAP SPLICES

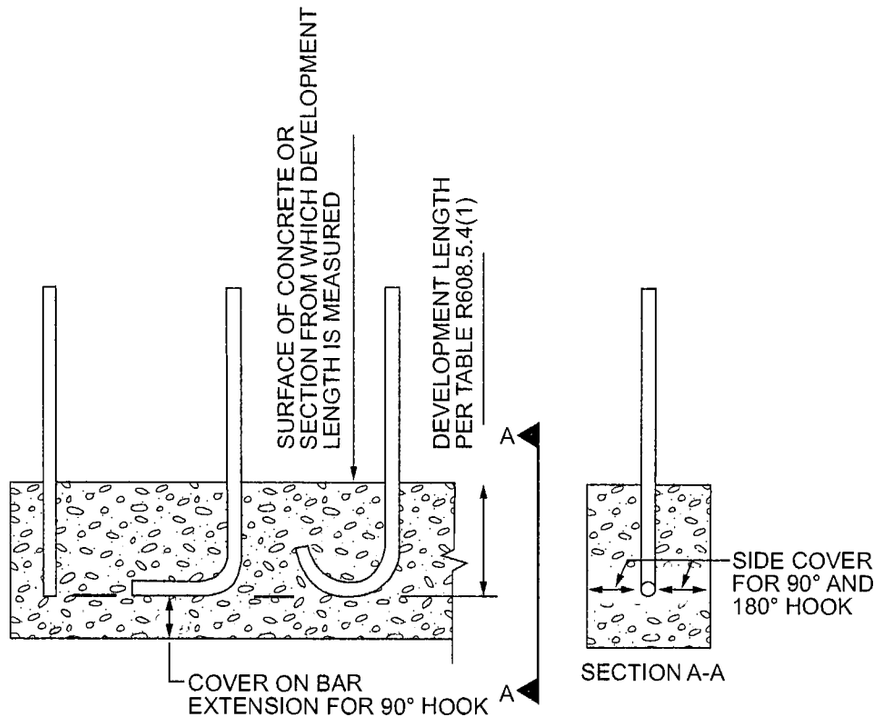

For SI. 1 degree = 0.0175 rad.

FIGURE R608.5.4(2)
DEVELOPMENT LENGTH AND COVER FOR HOOKS AND BAR EXTENSION

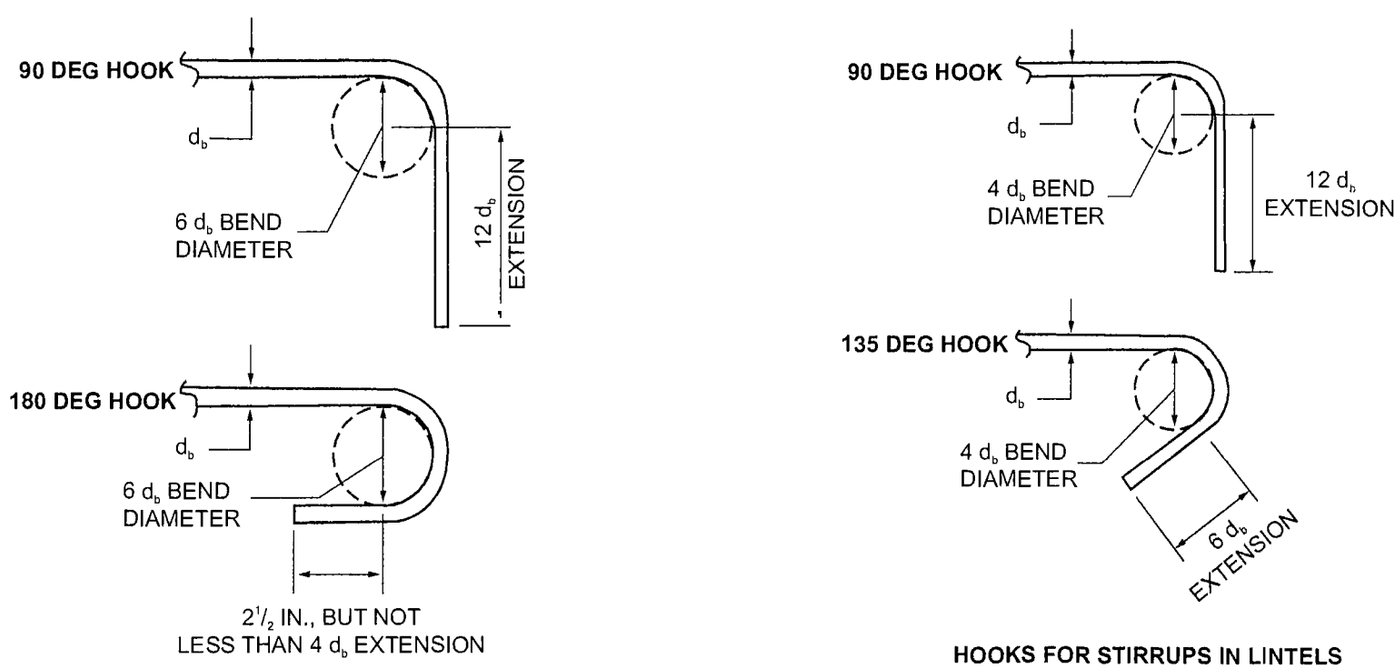

For SI: 1 inch = 25.4 mm, 1 degree = 0.0175 rad.

FIGURE R608.5.4(3)
STANDARD HOOKS

TABLE R608.5.4(2)
MAXIMUM SPACING FOR ALTERNATIVE BAR SIZE AND ALTERNATIVE GRADE OF STEEL[a, b, c]

BAR SPACING FROM APPLICABLE TABLE IN SECTION R608.6 (inches)	BAR SIZE FROM APPLICABLE TABLE IN SECTION R608.6														
	#4					#5					#6				
	Alternate bar size and alternate grade of steel desired														
	Grade 60		Grade 40			Grade 60		Grade 40			Grade 60		Grade 40		
	#5	#6	#4	#5	#6	#4	#6	#4	#5	#6	#4	#5	#4	#5	#6
	Maximum spacing for alternate bar size and alternate grade of steel (inches)														
8	12	18	5	8	12	5	11	3	5	8	4	6	2	4	5
9	14	20	6	9	13	6	13	4	6	9	4	6	3	4	6
10	16	22	7	10	15	6	14	4	7	9	5	7	3	5	7
11	17	24	7	11	16	7	16	5	7	10	5	8	3	5	7
12	19	26	8	12	18	8	17	5	8	11	5	8	4	6	8
13	20	29	9	13	19	8	18	6	9	12	6	9	4	6	9
14	22	31	9	14	21	9	20	6	9	13	6	10	4	7	9
15	23	33	10	16	22	10	21	6	10	14	7	11	5	7	10
16	25	35	11	17	23	10	23	7	11	15	7	11	5	8	11
17	26	37	11	18	25	11	24	7	11	16	8	12	5	8	11
18	28	40	12	19	26	12	26	8	12	17	8	13	5	8	12
19	29	42	13	20	28	12	27	8	13	18	9	13	6	9	13
20	31	44	13	21	29	13	28	9	13	19	9	14	6	9	13
21	33	46	14	22	31	14	30	9	14	20	10	15	6	10	14
22	34	48	15	23	32	14	31	9	15	21	10	16	7	10	15
23	36	48	15	24	34	15	33	10	15	22	10	16	7	11	15
24	37	48	16	25	35	15	34	10	16	23	11	17	7	11	16
25	39	48	17	26	37	16	35	11	17	24	11	18	8	12	17
26	40	48	17	27	38	17	37	11	17	25	12	18	8	12	17
27	42	48	18	28	40	17	38	12	18	26	12	19	8	13	18
28	43	48	19	29	41	18	40	12	19	26	13	20	8	13	19
29	45	48	19	30	43	19	41	12	19	27	13	20	9	14	19
30	47	48	20	31	44	19	43	13	20	28	14	21	9	14	20
31	48	48	21	32	45	20	44	13	21	29	14	22	9	15	21
32	48	48	21	33	47	21	45	14	21	30	15	23	10	15	21
33	48	48	22	34	48	21	47	14	22	31	15	23	10	16	22
34	48	48	23	35	48	22	48	15	23	32	15	24	10	16	23
35	48	48	23	36	48	23	48	15	23	33	16	25	11	16	23
36	48	48	24	37	48	23	48	15	24	34	16	25	11	17	24
37	48	48	25	38	48	24	48	16	25	35	17	26	11	17	25
38	48	48	25	39	48	25	48	16	25	36	17	27	12	18	25
39	48	48	26	40	48	25	48	17	26	37	18	27	12	18	26
40	48	48	27	41	48	26	48	17	27	38	18	28	12	19	27
41	48	48	27	42	48	26	48	18	27	39	19	29	12	19	27
42	48	48	28	43	48	27	48	18	28	40	19	30	13	20	28
43	48	48	29	44	48	28	48	18	29	41	20	30	13	20	29
44	48	48	29	45	48	28	48	19	29	42	20	31	13	21	29
45	48	48	30	47	48	29	48	19	30	43	20	32	14	21	30
46	48	48	31	48	48	30	48	20	31	44	21	32	14	22	31
47	48	48	31	48	48	30	48	20	31	44	21	33	14	22	31
48	48	48	32	48	48	31	48	21	32	45	22	34	15	23	32

For SI: 1 inch = 25.4 mm.

a. This table is for use with tables in Section R608.6 that specify the minimum bar size and maximum spacing of vertical wall reinforcement for foundation walls and above-grade walls. Reinforcement specified in tables in Section R608.6 is based on Grade 60 (420 MPa) steel reinforcement.

b. Bar spacing shall not exceed 48 inches on center and shall be not less than one-half the nominal wall thickness.

c. For Grade 50 (350 MPa) steel bars (ASTM A996, Type R), use spacing for Grade 40 (280 MPa) bars or interpolate between Grade 40 (280 MPa) and Grade 60 (420 MPa).

R608.5.4.2 Location of reinforcement in walls. For location of reinforcement in foundation walls and above-grade walls, see Sections R404.1.3.3.7.2 and R608.6.5, respectively.

R608.5.4.3 Lap splices. Vertical and horizontal wall reinforcement required by Sections R608.6 and R608.7 shall be the longest lengths practical. Where splices are necessary in reinforcement, the length of lap splices shall be in accordance with Table R608.5.4(1) and Figure R608.5.4(1). The maximum gap between noncontact parallel bars at a lap splice shall not exceed the smaller of one-fifth the required lap length and 6 inches (152 mm). See Figure R608.5.4(1).

R608.5.4.4 Development of bars in tension. Where bars are required to be developed in tension by other provisions of this code, development lengths and cover for hooks and bar extensions shall comply with Table R608.5.4(1) and Figure R608.5.4(2). The development lengths shown in Table R608.5.4(1) shall apply to bundled bars in lintels installed in accordance with Section R608.8.2.2.

R608.5.4.5 Standard hooks. Where reinforcement is required by this code to terminate with a standard hook, the hook shall comply with Figure R608.5.4(3).

R608.5.4.6 Webs of waffle-grid walls. Reinforcement, including stirrups, shall not be placed in webs of waffle-grid walls, including lintels. Webs are permitted to have form ties.

R608.5.4.7 Alternate grade of reinforcement and spacing. Where tables in Sections R404.1.3 and R608.6 specify vertical wall reinforcement based on minimum bar size and maximum spacing, which are based on Grade 60 (420 MPa) steel reinforcement, different size bars or bars made from a different grade of steel are permitted provided an equivalent area of steel per linear foot of wall is provided. Use of Table R608.5.4(2) is permitted to determine the maximum bar spacing for different bar sizes than specified in the tables and bars made from a different grade of steel. Bars shall not be spaced less than one-half the wall thickness, or more than 48 inches (1219 mm) on center.

R608.5.5 Construction joints in walls. Construction joints shall be made and located to not impair the strength of the wall. Construction joints in plain concrete walls, including walls required to have not less than No. 4 bars at 48 inches (1219 mm) on center by Section R608.6, shall be located at points of lateral support, and not less than one No. 4 bar shall extend across the construction joint at a spacing not to exceed 24 inches (610 mm) on center. Construction joint reinforcement shall have not less than 12 inches (305 mm) of embedment on both sides of the joint. Construction joints in reinforced concrete walls shall be located in the middle third of the span between lateral supports, or located and constructed as required for joints in plain concrete walls.

Exception: Vertical wall reinforcement required by this code is permitted to be used in lieu of construction joint reinforcement, provided the spacing does not exceed 24 inches (610 mm), or the combination of wall reinforcement and No. 4 bars described in Section R608.5.5 does not exceed 24 inches (610 mm).

R608.6 Above-grade wall requirements.

R608.6.1 General. The minimum thickness of load-bearing and nonload-bearing above-grade walls and reinforcement shall be as set forth in the appropriate table in this section based on the type of wall form to be used. The wall shall be designed in accordance with ACI 318 where the wall or building is not within the limitations of Section R608.2, where design is required by the tables in this section or where the wall is not within the scope of the tables in this section.

Above-grade concrete walls shall be constructed in accordance with this section and Figure R608.6(1), R608.6(2), R608.6(3) or R608.6(4). Above-grade concrete walls that are continuous with stem walls and not laterally supported by the slab-on-ground shall be designed and constructed in accordance with this section. Concrete walls shall be supported on continuous foundation walls or slabs-on-ground that are monolithic with the footing in accordance with Section R403. The minimum length of solid wall without openings shall be in accordance with Section R608.7. Reinforcement around openings, including lintels, shall be in accordance with Section R608.8. Lateral support for above-grade walls in the out-of-plane direction shall be provided by connections to the floor framing system, if applicable, and to ceiling and roof framing systems in accordance with Section R608.9. The wall thickness shall be equal to or greater than the thickness of the wall in the story above.

R608.6.2 Wall reinforcement for wind. Vertical wall reinforcement for resistance to out-of-plane wind forces shall be determined from Table R608.6(1), R608.6(2), R608.6(3) or R608.6(4). For the design of nonload-bearing walls, in Tables R608.6(1), R608.6(2) and R608.6(3) use the appropriate column labeled "Top." (see Sections R608.7.2.2.2 and R608.7.2.2.3). There shall be a vertical bar at corners of exterior walls. Unless more horizontal reinforcement is required by Section R608.7.2.2.1, the minimum horizontal reinforcement shall be four No. 4 bars [Grade 40 (280 MPa)] placed as follows: top bar within 12 inches (305 mm) of the top of the wall, bottom bar within 12 inches (305 mm) of the finish floor and one bar each at approximately one-third and two-thirds of the wall height.

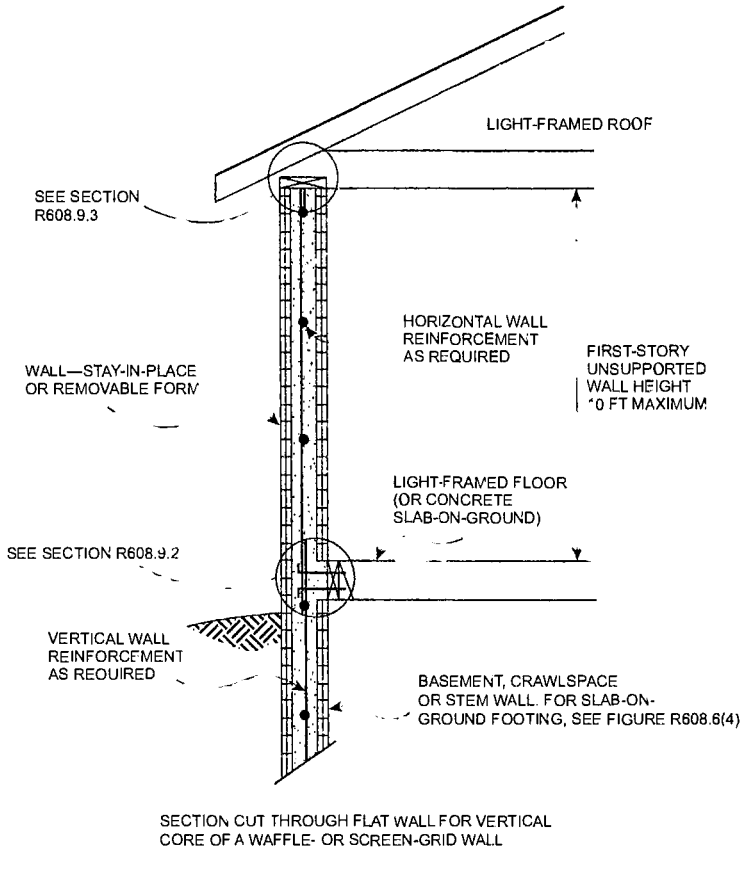

For SI: 1 foot = 304.8 mm.

FIGURE R608.6(1)
ABOVE-GRADE CONCRETE WALL CONSTRUCTION ONE STORY

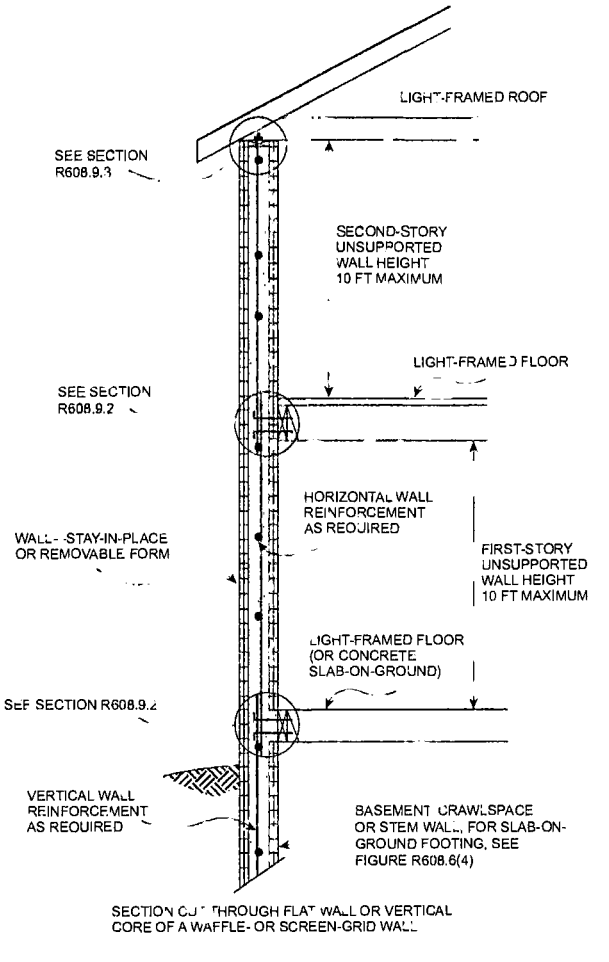

For SI: 1 foot = 304.8 mm.

FIGURE R608.6(3)
ABOVE-GRADE CONCRETE WALL CONSTRUCTION TWO-STORY

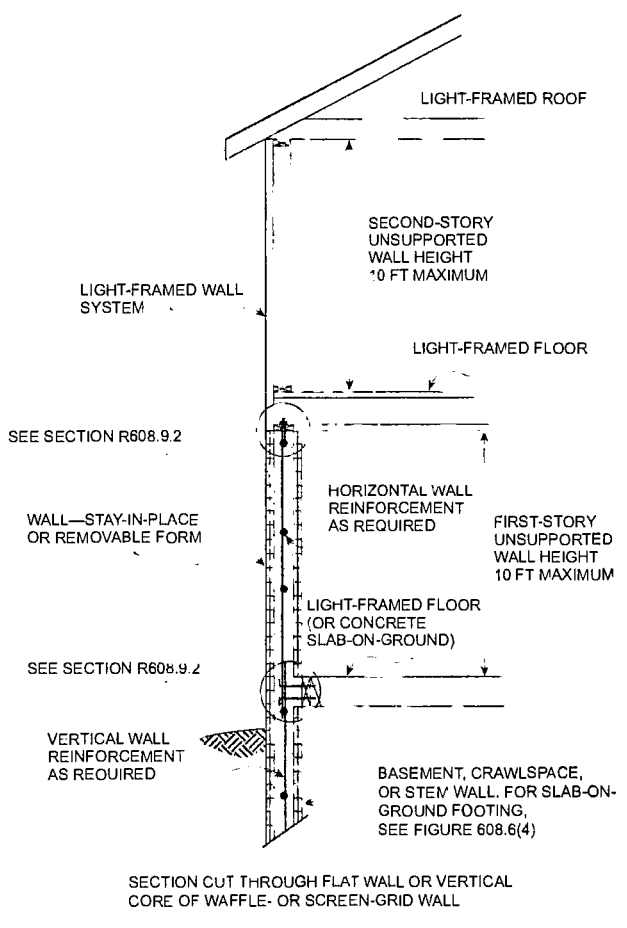

For SI: 1 foot = 304.8 mm.

FIGURE R608.6(2)
ABOVE-GRADE CONCRETE WALL CONSTRUCTION CONCRETE FIRST STORY AND LIGHT-FRAMED SECOND STORY

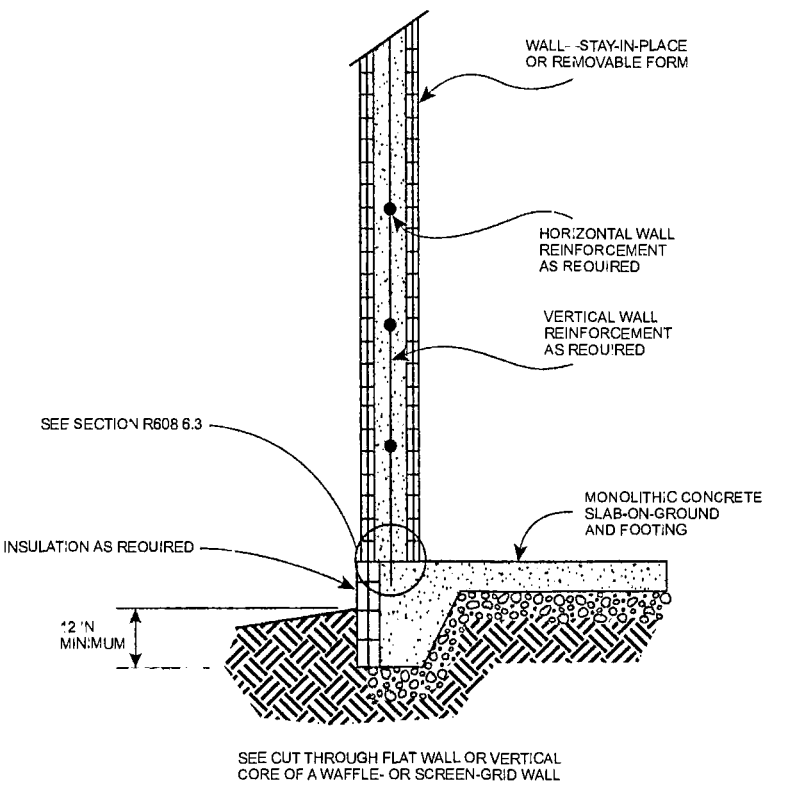

For SI: 1 inch = 25.4 mm.

FIGURE R608.6(4)
ABOVE-GRADE CONCRETE WALL SUPPORTED ON MONOLITHIC SLAB-ON-GROUND FOOTING

TABLE R608.6(1)
MINIMUM VERTICAL REINFORCEMENT FOR FLAT ABOVE-GRADE WALLS[a, b, c, d, e]

MAXIMUM WIND SPEED (mph)			MAXIMUM UNSUPPORTED WALL HEIGHT PER STORY (feet)	MINIMUM VERTICAL REINFORCEMENT-BAR SIZE AND SPACING (Inches)[f, g]							
				Nominal[h] wall thickness (Inches)							
Exposure Category				4		6		8		10	
B	C	D		Top[i]	Side[i]	Top[i]	Side[i]	Top[i]	Side[i]	Top[i]	Side[i]
115			8	4@48	4@48	4@48	4@48	4@48	4@48	4@48	4@48
			9	4@48	4@39	4@48	4@48	4@48	4@48	4@48	4@48
			10	4@41	4@34	4@48	4@48	4@48	4@48	4@48	4@48
120			8	4@48	4@43	4@48	4@48	4@48	4@48	4@48	4@48
			9	4@48	4@36	4@48	4@48	4@48	4@48	4@48	4@48
			10	4@37	4@34	4@48	4@48	4@48	4@48	4@48	4@48
130	110		8	4@48	4@38	4@48	4@48	4@48	4@48	4@48	4@48
			9	4@39	4@34	4@48	4@48	4@48	4@48	4@48	4@48
			10	4@34	4@34	4@48	4@48	4@48	4@48	4@48	4@48
140	119	110	8	4@43	4@34	4@48	4@48	4@48	4@48	4@48	4@48
			9	4@34	4@34	4@48	4@48	4@48	4@48	4@48	4@48
			10	4@34	4@31	4@48	4@48	4@48	4@48	4@48	4@48
150	127	117	8	4@37	4@34	4@48	4@48	4@48	4@48	4@48	4@48
			9	4@34	4@33	4@48	4@48	4@48	4@48	4@48	4@48
			10	4@31	4@27	4@48	4@48	4@48	4@48	4@48	4@48
160	136	125	8	4@34	4@34	4@48	4@48	4@48	4@48	4@48	4@48
			9	4@34	4@29	4@48	4@48	4@48	4@48	4@48	4@48
			10	4@27	4@24	4@48	4@48	4@48	4@48	4@48	4@48

For SI: 1 inch = 25.4 mm, 1 foot = 304.8 mm, 1 mile per hour = 0.447 m/s, 1 pound per square inch = 1.895 kPa, 1 square foot = 0.0929 m^2.

a. Table is based on ASCE 7 components and cladding wind pressures for an enclosed building using a mean roof height of 35 feet, interior wall area 4, an effective wind area of 10 square feet, topographic factor, K_{zt}, equal to 1.0, and Risk Category II.

b. Table is based on concrete with a minimum specified compressive strength of 2,500 psi.

c. See Section R608.6.5 for location of reinforcement in wall.

d. Deflection criterion is $L/240$, where L is the unsupported height of the wall in inches.

e. Interpolation is not permitted.

f. Where No. 4 reinforcing bars at a spacing of 48 inches are specified in the table as indicated by shaded cells, use of bars with a minimum yield strength of 40,000 psi or 60,000 psi is permitted.

g. Other than for No. 4 bars spaced at 48 inches on center, table values are based on reinforcing bars with a minimum yield strength of 60,000 psi. Vertical reinforcement with a yield strength of less than 60,000 psi or bars of a different size than specified in the table are permitted in accordance with Section R608.5.4.7 and Table R608.5.4(2).

h. See Table R608.3 for tolerances on nominal thicknesses.

i. "Top" means gravity load from roof or floor construction bears on top of wall. "Side" means gravity load from floor construction is transferred to wall from a wood ledger or cold-formed steel track bolted to side of wall. For nonload-bearing walls where floor framing members span parallel to the wall, use of the "Top" bearing condition is permitted.

TABLE R608.6(2)
MINIMUM VERTICAL REINFORCEMENT FOR WAFFLE-GRID ABOVE-GRADE WALLS[a, b, c, d, e]

MAXIMUM WIND SPEED (mph)			MAXIMUM UNSUPPORTED WALL HEIGHT PER STORY (feet)	MINIMUM VERTICAL REINFORCEMENT-BAR SIZE AND SPACING (inches)[f, g]			
				Nominal[h] wall thickness (inches)			
Exposure Category				6		8	
B	C	D		Top[i]	Side[i]	Top[i]	Side[i]
115			8	4@48	4@48	4@48	4@48
			9	4@48	5@43	4@48	4@48
			10	5@47	5@37	4@48	4@48
120			8	4@48	5@48	4@48	4@48
			9	4@48	5@40	4@48	4@48
			10	5@43	5@37	4@48	4@48
130	110		8	4@48	5@42	4@48	4@48
			9	5@45	5@37	4@48	4@48
			10	5@37	5@37	4@48	4@48
140	119	110	8	4@48	5@38	4@48	4@48
			9	5@39	5@37	4@48	4@48
			10	5@37	5@35	4@48	4@48
150	127	117	8	5@43	5@37	4@48	4@48
			9	5@37	5@37	4@48	4@48
			10	5@36	6@44	4@48	4@48
160	136	125	8	5@38	5@37	4@48	4@48
			9	5@37	6@47	4@48	4@48
			10	6@45	6@39	4@48	6@46

For SI: 1 inch = 25.4 mm, 1 foot = 304.8 mm, 1 mile per hour = 0.447 m/s, 1 pound per square inch = 6.895 kPa, 1 square foot = 0.0929 m^2.

a. Table is based on ASCE 7 components and cladding wind pressures for an enclosed building using a mean roof height of 35 feet, interior wall area 4, an effective wind area of 10 square feet, topographic factor, K_{zt} equal to 1.0, and Risk Category II.

b. Table is based on concrete with a minimum specified compressive strength of 2,500 psi.

c. See Section R608.6.5 for location of reinforcement in wall.

d. Deflection criterion is $L/240$, where L is the unsupported height of the wall in inches.

e. Interpolation is not permitted.

f. Where No. 4 reinforcing bars at a spacing of 48 inches are specified in the table as indicated by shaded cells, use of bars with a minimum yield strength of 40,000 psi or 60,000 psi is permitted.

g. Other than for No. 4 bars spaced at 48 inches on center, table values are based on reinforcing bars with a minimum yield strength of 60,000 psi. Maximum spacings shown are the values calculated for the specified bar size. Where the bar used is Grade 60 and the size specified in the table, the actual spacing in the wall shall not exceed a whole-number multiple of 12 inches such as, 12, 24, 36 and 48, that is less than or equal to the tabulated spacing. Vertical reinforcement with a yield strength of less than 60,000 psi or bars of a different size than specified in the table are permitted in accordance with Section R608.5.4.7 and Table R608.5.4(2).

h. See Table R608.3 for minimum core dimensions and maximum spacing of horizontal and vertical cores.

i. "Top" means gravity load from roof or floor construction bears on top of wall. "Side" means gravity load from floor construction is transferred to wall from a wood ledger or cold-formed steel track bolted to side of wall. For nonload-bearing walls and where floor framing members span parallel to the wall, the "top" bearing condition is permitted to be used.

TABLE R608.6(3)
MINIMUM VERTICAL REINFORCEMENT FOR 6-INCH SCREEN-GRID ABOVE-GRADE WALLS[a, b, c, d, e]

MAXIMUM WIND SPEED (mph)			MAXIMUM UNSUPPORTED WALL HEIGHT PER STORY (feet)	MINIMUM VERTICAL REINFORCEMENT-BAR SIZE AND SPACING (inches)[f, g]	
Exposure Category				Nominal[h] wall thickness (inches)	
				6	
B	C	D		Top[i]	Side[i]
115			8	4@48	4@48
			9	4@48	5@41
			10	4@48	6@48
120			8	4@48	4@48
			9	4@48	5@38
			10	5@42	6@48
130	110		8	4@48	5@41
			9	5@44	6@48
			10	5@35	6@48
140	119	110	8	4@48	5@36
			9	5@38	6@48
			10	6@48	6@48
150	127	117	8	5@42	6@48
			9	6@48	6@48
			10	6@48	6@42
160	136	125	8	5@37	6@48
			9	6@48	6@45
			10	6@44	6@38

For SI: 1 inch = 25.4 mm, 1 foot = 304.8 mm, 1 mile per hour = 0.447 m/s, 1 pound per square inch = 6.895 kPa, 1 square foot = 0.0929 m^2.

a. Table is based on ASCE 7 components and cladding wind pressures for an enclosed building using a mean roof height of 35 feet, interior wall area 4, an effective wind area of 10 square feet, topographic factor, K_{zt}, equal to 1.0, and Risk Category II.

b. Table is based on concrete with a minimum specified compressive strength of 2,500 psi.

c. See Section R608.6.5 for location of reinforcement in wall.

d. Deflection criterion is $L/240$, where L is the unsupported height of the wall in inches.

e. Interpolation is not permitted.

f. Where No. 4 reinforcing bars at a spacing of 48 inches are specified in the table as indicated by shaded cells, use of bars with a minimum yield strength of 40,000 psi or 60,000 psi is permitted.

g. Other than for No. 4 bars spaced at 48 inches on center, table values are based on reinforcing bars with a minimum yield strength of 60,000 psi. Maximum spacings shown are the values calculated for the specified bar size. Where the bar used is Grade 60 and the size specified in the table, the actual spacing in the wall shall not exceed a whole-number multiple of 12 inches such as, 12, 24, 36 and 48, that is less than or equal to the tabulated spacing. Vertical reinforcement with a yield strength of less than 60,000 psi or bars of a different size than specified in the table are permitted in accordance with Section R608.5.4.7 and Table R608.5.4(2).

h. See Table R608.3 for minimum core dimensions and maximum spacing of horizontal and vertical cores.

i. "Top" means gravity load from roof or floor construction bears on top of wall. "Side" means gravity load from floor construction is transferred to wall from a wood ledger or cold-formed steel track bolted to side of wall. For nonload-bearing wall and where floor framing members span parallel to the wall, use of the "Top" bearing condition is permitted.

TABLE R608.6(4)
MINIMUM VERTICAL REINFORCEMENT FOR FLAT, WAFFLE- AND SCREEN-GRID ABOVE-GRADE WALLS DESIGNED CONTINUOUS WITH FOUNDATION STEM WALLS[a, b, c, d, e, k]

MAXIMUM WIND SPEED (mph)			HEIGHT OF STEM WALL[h, i] (feet)	MAXIMUM DESIGN LATERAL SOIL LOAD (psf/ft)	MAXIMUM UNSUPPORTED HEIGHT OF ABOVE-GRADE WALL (feet)	MINIMUM VERTICAL REINFORCEMENT-BAR SIZE AND SPACING (inches)[f, g]						
						Wall type and nominal thickness[j] (Inches)						
Exposure Category						Flat				Waffle		Screen
B	C	D				4	6	8	10	6	8	6
115			3	30	8	4@30	4@48	4@48	4@48	4@22	4@26	4@21
					10	4@23	5@43	4@48	4@48	4@17	4@20	4@16
				60	10	4@19	5@37	4@48	4@48	4@14	4@17	4@14
			6	30	10	DR	5@21	6@35	4@48	DR	4@10	DR
				60	10	DR	5@12	6@25	6@28	DR	DR	DR
120			3	30	8	4@28	4@48	4@48	4@48	4@21	4@48	4@20
					10	4@22	5@41	4@48	4@48	4@16	4@19	4@15
				60	10	4@18	5@35	4@48	4@48	4@14	4@17	4@13
			6	30	10	DR	5@21	6@35	4@48	DR	4@10	DR
				60	10	DR	5@12	6@25	6@28	DR	DR	DR
130	110		3	30	8	4@25	4@48	4@48	4@48	4@18	4@22	4@18
					10	4@19	5@36	4@48	4@48	4@14	4@17	4@13
			6	60	10	4@16	5@34	4@48	4@48	4@12	4@17	4@12
				30	10	DR	5@19	6@35	4@48	DR	4@9	DR
				60	10	DR	5@12	6@24	6@28	DR	DR	DR
140	119	110	3	30	8	4@22	5@42	4@48	4@48	4@16	4@20	4@16
					10	4@17	5@34	4@48	4@48	4@21	4@17	4@12
				60	10	4@15	5@34	4@48	4@48	4@11	4@17	4@10
			6	30	10	DR	5@18	6@35	6@35	DR	4@48	DR
				60	10	DR	5@11	6@23	6@28	DR	DR	DR
150	127	117	3	30	8	4@20	5@37	4@48	4@48	4@15	4@18	4@14
					10	4@15	5@34	4@48	4@48	4@11	4@17	4@11
				60	10	4@13	5@34	4@48	4@48	4@10	4@16	4@9
			6	30	10	DR	5@17	6@33	6@32	DR	4@8	DR
				60	10	DR	DR	6@22	6@28	DR	DR	DR
160	136	125	3	30	8	4@18	5@34	4@48	4@48	4@13	4@17	4@13
					10	4@13	5@34	4@48	4@48	4@10	4@16	4@9
				60	10	4@11	5@31	6@45	4@48	4@9	4@14	4@8
			6	30	10	DR	5@15	6@31	6@30	DR	4@7	DR
				60	10	DR	DR	6@21	6@27	DR	DR	DR

For SI: 1 inch = 25.4 mm, 1 foot = 304.8 mm, 1 mile per hour = 0.447 m/s, 1 pound per square inch = 6.895 kPa, 1 square foot = 0.0929 m^2.

DR = Design Required.

a. Table is based on ASCE 7 components and cladding wind pressures for an enclosed building using a mean roof height of 35 feet, interior wall area 4, an effective wind area of 10 square feet, topographic factor, K_{zt}, equal to 1.0, and Risk Category II.

b. Table is based on concrete with a minimum specified compressive strength of 2,500 psi.

c. See Section R608.6.5 for location of reinforcement in wall.

d. Deflection criterion is $L/240$, where L is the height of the wall in inches from the exterior finish ground level to the top of the above-grade wall.

e. Interpolation is not permitted. For intermediate values of basic wind speed, heights of stem wall and above-grade wall, and design lateral soil load, use next higher value.

f. Where No. 4 reinforcing bars at a spacing of 48 inches are specified in the table as indicated by shaded cells, use of bars with a minimum yield strength of 40,000 psi or 60,000 psi is permitted.

g. Other than for No. 4 bars spaced at 48 inches on center, table values are based on reinforcing bars with a minimum yield strength of 60,000 psi. Maximum spacings shown are the values calculated for the specified bar size. In waffle and screen-grid walls where the bar used is Grade 60 and the size specified in the table, the actual spacing in the wall shall not exceed a whole-number multiple of 12 inches such as, 12, 24, 36 and 48, that is less than or equal to the tabulated spacing. Vertical reinforcement with a yield strength of less than 60,000 psi and bars of a different size than specified in the table are permitted in accordance with Section R608.5.4.7 and Table R608.5.4(2).

h. Height of stem wall is the distance from the exterior finish ground level to the top of the slab-on-ground.

i. Where the distance from the exterior finish ground level to the top of the slab-on-ground is equal to or greater than 4 feet, the stem wall shall be laterally supported at the top and bottom before backfilling. Where the wall is designed and constructed to be continuous with the above-grade wall, temporary supports bracing the top of the stem wall shall remain in place until the above-grade wall is laterally supported at the top by floor or roof construction.

j. See Table R608.3 for tolerances on nominal thicknesses, and minimum core dimensions and maximum spacing of horizontal and vertical cores for waffle- and screen-grid walls.

k. Tabulated values are applicable to construction where gravity loads bear on top of wall, and conditions where gravity loads from floor construction are transferred to wall from a wood ledger or cold-formed steel track bolted to side of wall. See Tables R608.6(1), R608.6(2) and R608.6(3).

R608.6.3 Continuity of wall reinforcement between stories. Vertical reinforcement required by this section shall be continuous between elements providing lateral support for the wall. Reinforcement in the wall of the *story* above shall be continuous with the reinforcement in the wall of the *story* below, or the foundation wall, if applicable. Lap splices, where required, shall comply with Section R608.5.4.3 and Figure R608.5.4(1). Where the above-grade wall is supported by a monolithic slab-on-ground and footing, dowel bars with a size and spacing to match the vertical above-grade concrete wall reinforcement shall be embedded in the monolithic slab-on-ground and footing the distance required to develop the dowel bar in tension in accordance with Section R608.5.4.4 and Figure R608.5.4(2) and lap-spliced with the above-grade wall reinforcement in accordance with Section R608.5.4.3 and Figure R608.5.4(1).

Where a construction joint in the wall is located below the level of the floor and less than the distance required to develop the bar in tension, the distance required to develop the bar in tension shall be measured from the top of the concrete below the joint. See Section R608.5.5.

Exception: Where reinforcement in the wall above cannot be made continuous with the reinforcement in the wall below, the bottom of the reinforcement in the wall above shall be terminated in accordance with one of the following:

1. Extend below the top of the floor the distance required to develop the bar in tension in accordance with Section R608.5.4.4 and Figure R608.5.4(2).
2. Lap-spliced in accordance with Section R608.5.4.3 and Figure R608.5.4(1) with a dowel bar that extends into the wall below the distance required to develop the bar in tension in accordance with Section R608.5.4.4 and Figure R608.5.4(2).

R608.6.4 Termination of reinforcement. Where indicated in Items 1 through 3, vertical wall reinforcement in the top-most *story* with concrete walls shall be terminated with a 90-degree (1.57 rad) standard hook complying with Section R608.5.4.5 and Figure R608.5.4(3).

1. Vertical bars adjacent to door and window openings required by Section R608.8.1.2.
2. Vertical bars at the ends of required solid wall segments (see Section R608.7.2.2.2).
3. Vertical bars (other than end bars, see Item 2) used as shear reinforcement in required solid wall segments where the reduction factor for design strength, R_3, used is based on the wall having horizontal and vertical shear reinforcement (see Section R608.7.2.2.3).

The bar extension of the hook shall be oriented parallel to the horizontal wall reinforcement and be within 4 inches (102 mm) of the top of the wall.

Horizontal reinforcement shall be continuous around the building corners by bending one of the bars and lap-splicing it with the bar in the other wall in accordance with Section R608.5.4.3 and Figure R608.5.4(1).

In required solid wall segments where the reduction factor for design strength, R_3, is based on the wall having horizontal and vertical shear reinforcement in accordance with Section R608.7.2.2.1, horizontal wall reinforcement shall be terminated with a standard hook complying with Section R608.5.4.5 and Figure R608.5.4(3) or in a lap-splice, except at corners where the reinforcement shall be continuous as required.

Exception: In lieu of bending horizontal reinforcement at corners, separate bent reinforcing bars shall be permitted provided that the bent bar is lap-spliced with the horizontal reinforcement in both walls in accordance with Section R608.5.4.3 and Figure R608.5.4(1).

R608.6.5 Location of reinforcement in wall. Except for vertical reinforcement at the ends of required solid wall segments, which shall be located as required by Section R608.7.2.2.2, the location of the vertical reinforcement shall not vary from the center of the wall by more than the greater of 10 percent of the wall thickness and $^3/_8$-inch (10 mm). Horizontal and vertical reinforcement shall be located to provide not less than the minimum cover required by Section R608.5.4.1.

R608.7 Solid walls for resistance to lateral forces.

R608.7.1 Length of solid wall. Each exterior wall line in each story shall have a total length of solid wall required by Section R608.7.1.1. A solid wall is a section of flat, waffle-grid or screen-grid wall, extending the full story height without openings or penetrations, except those permitted by Section R608.7.2. Solid wall segments that contribute to the total length of solid wall shall comply with Section R608.7.2.

R608.7.1.1 Length of solid wall for wind. Buildings shall have solid walls in each exterior endwall line (the side of a building that is parallel to the span of the roof or floor framing) and sidewall line (the side of a building that is perpendicular to the span of the roof or floor framing) to resist lateral in-plane wind forces. The site-appropriate basic wind speed and exposure category shall be used in Tables R608.7(1A) through (1C) to determine the unreduced total length, *UR*, of solid wall required in each exterior endwall line and sidewall line. For buildings with a mean roof height of less than 35 feet (10 668 mm), the unreduced values determined from Tables R608.7(1A) though (1C) are permitted to be reduced by multiplying by the applicable factor, R_1, from Table R608.7(2); however, reduced values shall be not less than the minimum values in Tables R608.7(1A) through (1C). Where the floor-to-ceiling height of a story is less than 10 feet (3048 mm), the unreduced values determined from Tables R608.7(1A) through (1C), including minimum values, are permitted to be reduced by multiplying by the applicable factor, R_2, from Table R608.7(3). To account for different design strengths than assumed in determining the values in Tables R608.7(1A) through (1C), the unreduced lengths determined from Tables R608.7(1A) through (1C), including minimum values, are permitted to be reduced by multiplying by the applicable factor, R_3, from Table R608.7(4). The reductions permitted by Tables R608.7(2), R608.7(3) and R608.7(4) are cumulative.

The total length of solid wall segments, *TL*, in a wall line that comply with the minimum length requirements of Section R608.7.2.1 [see Figure R608.7(1)] shall be equal to or greater than the product of the unreduced length of solid wall from Tables R608.7(1A) through (1C), *UR* and the applicable reduction factors, if any, from Tables R608.7(2), R608.7(3) and R608.7(4) as indicated by Equation R6-1.

$$TL \geq R_1 \times R_2 \times R_3 \times UR \qquad \textbf{Equation R6-1)}$$

where:

TL = Total length of solid wall segments in a wall line that comply with Section R608.7.2.1 [see Figure R608.7(1)].

R_1 = 1.0 or reduction factor for mean roof height from Table R608.7(2).

R_2 = 1.0 or reduction factor for floor-to-ceiling wall height from Table R608.7(3).

R_3 = 1.0 or reduction factor for design strength from Table R608.7(4).

UR = Unreduced length of solid wall from Tables R608.7(1A) through (1C).

The total length of solid wall in a wall line, *TL*, shall be not less than that provided by two solid wall segments complying with the minimum length requirements of Section R608.7.2.1.

To facilitate determining the required wall thickness, wall type, number and *grade* of vertical bars at each end of each solid wall segment, and whether shear reinforcement is required, use of Equation R6-2 is permitted.

$$R \leq \frac{TL}{R_1 \times R_2 \times UR} \qquad \textbf{(Equation R6-2)}$$

After determining the maximum permitted value of the reduction factor for design strength, R_3, in accordance with Equation R6-2, select a wall type from Table R608.7(4) with R_3 less than or equal to the value calculated.

R608.7.2 Solid wall segments. Solid wall segments that contribute to the required length of solid wall shall comply with this section. Reinforcement shall be provided in accordance with Section R608.7.2.2 and Table R608.7(4). Solid wall segments shall extend the full story-height without openings, other than openings for the utilities and other building services passing through the wall. In flat walls and waffle-grid walls, such openings shall have an area of less than 30 square inches (19 355 mm^2) without any dimension exceeding $6^1/_4$ inches (159 mm), and shall not be located within 6 inches (152 mm) of the side edges of the solid wall segment. In screen-grid walls, such openings shall be located in the portion of the solid wall segment between horizontal and vertical cores of concrete and opening size and location are not restricted provided there is not any concrete removed.

R608.7.2.1 Minimum length of solid wall segment and maximum spacing. Only solid wall segments equal to or greater than 24 inches (610 mm) in length shall be included in the total length of solid wall required by Section R608.7.1. In addition, not more than two solid wall segments equal to or greater than 24 inches (610 mm) in length and less than 48 inches (1219 mm) in length shall be included in the required total length of solid wall. The maximum clear opening width shall be 18 feet (5486 mm). See Figure R608.7(1).

R608.7.2.2 Reinforcement in solid wall segments.

R608.7.2.2.1 Horizontal shear reinforcement. Where reduction factors for design strength, R_3, from Table R608.7(4) based on horizontal and vertical shear reinforcement being provided are used, solid wall segments shall have horizontal reinforcement consisting of minimum No. 4 bars. Horizontal shear reinforcement shall be the same grade of steel required for the vertical reinforcement at the ends of solid wall segments by Section R608.7.2.2.2.

The spacing of horizontal reinforcement shall not exceed the smaller of one-half the length of the solid wall segment, minus 2 inches (51 mm), and 18 inches (457 mm). Horizontal shear reinforcement shall terminate in accordance with Section R608.6.4.

R608.7.2.2.2 Vertical reinforcement. Vertical reinforcement applicable to the reduction factor(s) for design strength, R_3, from Table R608.7(4) that is used, shall be located at each end of each solid wall segment in accordance with the applicable detail in Figure R608.7(2). The No. 4 vertical bar required on each side of an opening by Section R608.8.1.2 is permitted to be used as reinforcement at the ends of solid wall segments where installed in accordance with the applicable detail in Figure R608.7(2). There shall be not less than two No. 4 bars at each end of solid wall segments located as required by the applicable detail in Figure R608.7(2). One of the bars at each end of solid wall segments shall be deemed to meet the requirements for vertical wall reinforcement required by Section R608.6.

The vertical wall reinforcement at each end of each solid wall segment shall be developed below the bottom of the adjacent wall opening [see Figure R608.7(3)] by one of the following methods:

1. Where the wall height below the bottom of the adjacent opening is equal to or greater than 22 inches (559 mm) for No. 4 or 28 inches (711 mm) for No. 5 vertical wall reinforcement, reinforcement around openings in accordance with Section R608.8.1 shall be sufficient.
2. Where the wall height below the bottom of the adjacent opening is less than required by Item 1, the vertical wall reinforcement adjacent to the opening shall extend into the footing far enough to develop the bar in tension in accordance with Section R608.5.4.4 and Figure R608.5.4(2), or shall be lap-spliced with a dowel that is embedded in the footing far enough to develop the dowel-bar in tension.

TABLE R608.7(1A)
UNREDUCED LENGTH, *UR*, OF SOLID WALL REQUIRED IN EACH EXTERIOR ENDWALL FOR WIND PERPENDICULAR TO RIDGE ONE STORY OR TOP STORY OF TWO STORY[a, c, d, e, f, g]

SIDEWALL LENGTH (feet)	ENDWALL LENGTH (feet)	ROOF SLOPE	UNREDUCED LENGTH, *UR*, OF SOLID WALL REQUIRED IN ENDWALLS FOR WIND PERPENDICULAR TO RIDGE (feet)						
			Basic Wind Speed (mph) Exposure						
			115B	120B	130B	140B	150B	160B	Minimum[b]
			—	—	110C	119C	127C	136C	
			—	—	—	110D	117D	125D	
15	15	< 1:12	1.03	1.12	1.32	1.53	1.76	2.00	0.92
		5:12	1.43	1.56	1.83	2.12	2.43	2.77	1.15
		7:12	2.00	2.18	2.56	2.97	3.41	3.88	1.25
		12:12	3.20	3.48	4.09	4.74	5.44	6.19	1.54
	30	< 1:12	1.03	1.12	1.32	1.53	1.76	2.00	0.98
		5:12	1.43	1.56	1.83	2.12	2.43	2.77	1.43
		7:12	2.78	3.03	3.56	4.13	4.74	5.39	1.64
		12:12	5.17	5.63	6.61	7.67	8.80	10.01	2.21
	45	< 1:12	1.03	1.12	1.32	1.53	1.76	2.00	1.04
		5:12	1.43	1.56	1.83	2.12	2.43	2.77	1.72
		7:12	3.57	3.88	4.56	5.28	6.07	6.90	2.03
		12:12	7.15	7.78	9.13	10.59	12.16	13.84	2.89
	60	< 1:12	1.03	1.12	1.32	1.53	1.76	2.00	1.09
		5:12	1.43	1.56	1.83	2.12	2.43	2.77	2.01
		7:12	4.35	4.73	5.55	6.44	7.39	8.41	2.42
		12:12	9.12	9.93	11.66	13.52	15.52	17.66	3.57
30	15	< 1:12	1.84	2.01	2.35	2.73	3.13	3.57	1.82
		5:12	2.56	2.78	3.27	3.79	4.35	4.95	2.23
		7:12	3.61	3.93	4.61	5.34	6.13	6.98	2.42
		12:12	5.61	6.10	7.16	8.31	9.54	10.85	2.93
	30	< 1:12	1.84	2.01	2.35	2.73	3.13	3.57	1.93
		5:12	2.56	2.78	3.27	3.79	4.35	4.95	2.75
		7:12	4.92	5.35	6.28	7.29	8.37	9.52	3.12
		12:12	8.92	9.71	11.39	13.22	15.17	17.26	4.14
	45	< 1:12	1.84	2.01	2.35	2.73	3.13	3.57	2.03
		5:12	2.56	2.78	3.27	3.79	4.35	4.95	3.26
		7:12	6.23	6.78	7.96	9.23	10.60	12.06	3.82
		12:12	12.23	13.31	15.63	18.12	20.80	23.67	5.36
	60	< 1:12	1.84	2.01	2.35	2.73	3.13	3.57	2.14
		5:12	2.56	2.78	3.27	3.79	4.35	4.95	3.78
		7:12	7.54	8.21	9.64	11.17	12.83	14.60	4.52
		12:12	15.54	16.92	19.86	23.03	26.44	30.08	6.57

(continued)

TABLE R608.7(1A)—continued
UNREDUCED LENGTH, *UR*, OF SOLID WALL REQUIRED IN EACH EXTERIOR ENDWALL FOR WIND PERPENDICULAR TO RIDGE ONE STORY OR TOP STORY OF TWO STORY[a, c, d, e, f, g]

SIDEWALL LENGTH (feet)	ENDWALL LENGTH (feet)	ROOF SLOPE	UNREDUCED LENGTH, *UR*, OF SOLID WALL REQUIRED IN ENDWALLS FOR WIND PERPENDICULAR TO RIDGE (feet)						
			Basic Wind Speed (mph) Exposure						
			115B	120B	130B	140B	150B	160B	Minimum[b]
			—	—	110C	119C	127C	136C	
			—	—	—	110D	117D	125D	
60	15	< 1:12	3.42	3.72	4.36	5.06	5.81	6.61	3.63
		5:12	4.75	5.17	6.06	7.03	8.07	9.19	4.40
		7:12	6.76	7.36	8.64	10.02	11.51	13.09	4.75
		12:12	10.35	11.27	13.23	15.34	17.61	20.04	5.71
	30	< 1:12	3.42	3.72	4.36	5.06	5.81	6.61	3.83
		5:12	4.75	5.17	6.06	7.03	8.07	9.19	5.37
		7:12	9.12	9.93	11.66	13.52	15.52	17.66	6.07
		12:12	16.30	17.75	20.83	24.16	27.73	31.55	8.00
	45	< 1:12	3.55	3.87	4.54	5.27	6.05	6.88	4.03
		5:12	4.94	5.37	6.31	7.31	8.40	9.55	6.34
		7:12	11.71	12.75	14.97	17.36	19.93	22.67	7.39
		12:12	22.70	24.71	29.00	33.64	38.62	43.94	10.29
	60	< 1:12	3.68	4.01	4.71	5.46	6.27	7.13	4.23
		5:12	5.11	5.57	6.54	7.58	8.70	9.90	7.31
		7:12	14.38	15.66	18.37	21.31	24.46	27.83	8.71
		12:12	29.30	31.90	37.44	43.42	49.85	56.72	12.57

For SI: 1 inch = 25.4 mm, 1 foot = 304.8 mm, 1 mile per hour = 0.447 m/s, 1 pound-force per linear foot = 0.146 kN/m, 1 pound per square foot = 47.88 Pa.

a. Tabulated lengths were derived by calculating design wind pressures in accordance with Figure 28.4-1 of ASCE 7 for a building with a mean roof height of 35 feet, topographic factor, K_{zt}, equal to 1.0, and Risk Category II. For wind perpendicular to the ridge, the effects of a 2-foot overhang on each endwall are included. The design pressures were used to calculate forces to be resisted by solid wall segments in each. The forces to be resisted by each wall line were then divided by the default design strength of 840 pounds per linear foot of length to determine the unreduced length, *UR*, of solid wall length required in each endwall. The actual mean roof height of the building shall not exceed the least horizontal dimension of the building.

b. Tabulated lengths in the "minimum" column are based on the requirement of Section 28.4.4 of ASCE 7 that the main windforce-resisting system be designed for a minimum pressure of 16 psf multiplied by the wall area of the building and 8 psf multiplied by the roof area of the building projected onto a vertical plane normal to the assumed wind direction. Tabulated lengths in shaded cells are less than the "minimum" value. Where the minimum controls, it is permitted to be reduced in accordance with Notes c, d and e. See Section R608.7.1.1.

c. For buildings with a mean roof height of less than 35 feet, tabulated lengths are permitted to be reduced by multiplying by the appropriate factor, R_1, from Table R608.7(2). The reduced length shall be not less than the "minimum" value shown in the table.

d. Tabulated lengths for "one story or top story of two story" are based on a floor-to-ceiling height of 10 feet. Tabulated lengths for "first story of two story" are based on floor-to-ceiling heights of 10 feet each for the first and second story. For floor-to-ceiling heights less than assumed, use the lengths in this table or Table R608.7 (1B) or (1C), or multiply the value in the table by the reduction factor, R_2, from Table R608.7(3).

e. Tabulated lengths are based on the default design shear strength of 840 pounds per linear foot of solid wall segment. The tabulated lengths are permitted to be reduced by multiplying by the applicable reduction factor for design strength, R_3, from Table R608.7(4).

f. The reduction factors, R_1, R_2 and R_3, in Tables R608.7(2), R608.7(3), and R608.7(4), respectively, are permitted to be compounded, subject to the limitations of Note b. However, the minimum number and minimum length of solid wall segments in each wall line shall comply with Sections R608.7.1 and R608.7.2.1, respectively.

g. For intermediate values of sidewall length, endwall length, roof slope and basic wind speed, use the next higher value, or determine by interpolation.

TABLE R608.7(1B)
UNREDUCED LENGTH, *UR*, OF SOLID WALL REQUIRED IN EACH EXTERIOR ENDWALL FOR WIND PERPENDICULAR TO RIDGE FIRST STORY OF TWO STORY[a, c, d, e, f, g]

SIDEWALL LENGTH (feet)	ENDWALL LENGTH (feet)	ROOF SLOPE	UNREDUCED LENGTH, *UR*, OF SOLID WALL REQUIRED IN ENDWALLS FOR WIND PERPENDICULAR TO RIDGE (feet)						
			Basic Wind Speed (mph) Exposure						
			115B	120B	130B	140B	150B	160B	Minimum[b]
			—	—	110C	119C	127C	136C	
			—	—	—	110D	117D	125D	
15	15	< 1:12	2.98	3.25	3.81	4.42	5.07	5.77	2.54
		5:12	4.13	4.50	5.28	6.12	7.03	8.00	2.76
		7:12	4.31	4.70	5.51	6.39	7.34	8.35	2.87
		12:12	5.51	6.00	7.04	8.16	9.37	10.66	3.15
	30	< 1:12	2.98	3.25	3.81	4.42	5.07	5.77	2.59
		5:12	4.13	4.50	5.28	6.12	7.03	8.00	3.05
		7:12	5.09	5.55	6.51	7.55	8.67	9.86	3.26
		12:12	7.48	8.15	9.56	11.09	12.73	14.49	3.83
	45	< 1:12	2.98	3.25	3.81	4.42	5.07	5.77	2.65
		5:12	4.13	4.50	5.28	6.12	7.03	8.00	3.34
		7:12	5.88	6.40	7.51	8.71	10.00	11.37	3.65
		12:12	9.46	10.30	12.09	14.02	16.09	18.31	4.51
	60	< 1:12	2.98	3.25	3.81	4.42	5.07	5.77	2.71
		5:12	4.13	4.50	5.28	6.12	7.03	8.00	3.63
		7:12	6.66	7.25	8.51	9.87	11.32	12.89	4.04
		12:12	11.43	12.45	14.61	16.94	19.45	22.13	5.19
30	15	< 1:12	5.32	5.79	6.80	7.89	9.05	10.30	5.06
		5:12	7.39	8.04	9.44	10.95	12.57	14.30	5.47
		7:12	7.94	8.65	10.15	11.77	13.51	15.37	5.65
		12:12	9.94	10.82	12.70	14.73	16.91	19.24	6.17
	30	< 1:12	5.32	5.79	6.80	7.89	9.05	10.30	5.16
		5:12	7.39	8.04	9.44	10.95	12.57	14.30	5.98
		7:12	9.25	10.07	11.82	13.71	15.74	17.91	6.35
		12:12	13.25	14.43	16.93	19.64	22.54	25.65	7.38
	45	< 1:12	5.32	5.79	6.80	7.89	9.05	10.30	5.27
		5:12	7.39	8.04	9.44	10.95	12.57	14.30	6.50
		7:12	10.56	11.50	13.50	15.65	17.97	20.45	7.06
		12:12	16.56	18.03	21.16	24.55	28.18	32.06	8.60
	60	< 1:12	5.32	5.79	6.80	7.89	9.05	10.30	5.38
		5:12	7.39	8.04	9.44	10.95	12.57	14.30	7.01
		7:12	11.87	12.93	15.17	17.60	20.20	22.98	7.76
		12:12	19.87	21.64	25.40	29.45	33.81	38.47	9.81

(continued)

TABLE R608.7(1B)—continued
UNREDUCED LENGTH, *UR*, OF SOLID WALL REQUIRED IN EACH EXTERIOR ENDWALL FOR WIND PERPENDICULAR TO RIDGE FIRST STORY OF TWO STORY[a, c, d, e, f, g]

SIDEWALL LENGTH (feet)	ENDWALL LENGTH (feet)	ROOF SLOPE	UNREDUCED LENGTH, *UR*, OF SOLID WALL REQUIRED IN ENDWALLS FOR WIND PERPENDICULAR TO RIDGE (feet)						
			Basic Wind Speed (mph) Exposure						
			115B	120B	130B	140B	150B	160B	Minimum[b]
			—	—	110C	119C	127C	136C	
			—	—	—	110D	117D	125D	
60	15	< 1:12	9.87	10.74	12.61	14.62	16.79	19.10	10.10
		5:12	13.71	14.93	17.52	20.32	23.33	26.54	10.87
		7:12	15.08	16.42	19.27	22.35	25.66	29.20	11.22
		12:12	18.67	20.33	23.86	27.67	31.77	36.14	12.19
	30	< 1:12	9.87	10.74	12.61	14.62	16.79	19.10	10.30
		5:12	13.71	14.93	17.52	20.32	23.33	26.54	11.85
		7:12	17.44	18.99	22.29	25.85	29.67	33.76	12.54
		12:12	24.62	26.81	31.46	36.49	41.89	47.66	14.48
	45	< 1:12	10.27	11.18	13.12	15.21	17.47	19.87	10.50
		5:12	14.26	15.52	18.22	21.13	24.26	27.60	12.82
		7:12	20.21	22.01	25.83	29.95	34.39	39.12	13.86
		12:12	31.20	33.97	39.87	46.23	53.07	60.39	16.76
	60	< 1:12	10.64	11.59	13.60	15.77	18.11	20.60	10.70
		5:12	14.77	16.09	18.88	21.90	25.14	28.60	13.79
		7:12	23.05	25.09	29.45	34.15	39.21	44.61	15.18
		12:12	37.97	41.34	48.52	56.27	64.60	73.49	19.05

For SI: 1 inch = 25.4 mm, 1 foot = 304.8 mm, 1 mile per hour = 0.447 m/s, 1 pound force per linear foot = 0.146 kN/m, 1 pound per square foot = 47.88 Pa.

a. Tabulated lengths were derived by calculating design wind pressures in accordance with Figure 28.4-1 of ASCE 7 for a building with a mean roof height of 35 feet, topographic factor, K_{zt}, equal to 1.0, and Risk Category II. For wind perpendicular to the ridge, the effects of a 2-foot overhang on each endwall are included. The design pressures were used to calculate forces to be resisted by solid wall segments in each endwall. The forces to be resisted by each wall line were then divided by the default design strength of 840 pounds per linear foot of length to determine the unreduced length, *UR*, of solid wall length required in each endwall. The actual mean roof height of the building shall not exceed the least horizontal dimension of the building.

b. Tabulated lengths in the "minimum" column are based on the requirement of Section 28.4.4 of ASCE 7 that the main windforce-resisting system be designed for a minimum pressure of 1016 psf multiplied by the wall area of the building and 8 psf multiplied by the roof area of the building projected onto a vertical plane normal to the assumed wind direction. Tabulated lengths in shaded cells are less than the "minimum" value. Where the minimum controls, it is permitted to be reduced in accordance with Notes c, d and e. See Section R608.7.1.1.

c. For buildings with a mean roof height of less than 35 feet, tabulated lengths are permitted to be reduced by multiplying by the appropriate factor, R_1, from Table R608.7(2). The reduced length shall be not less than the "minimum" value shown in the table.

d. Tabulated lengths for "one story or top story of two story" are based on a floor-to-ceiling height of 10 feet. Tabulated lengths for "first story of two story" are based on floor-to-ceiling heights of 10 feet each for the first and second story. For floor-to-ceiling heights less than assumed, use the lengths in this table or Table R608.7(1A) or (1C), or multiply the value in the table by the reduction factor, R_2, from Table R608.7(3).

e. Tabulated lengths are based on the default design shear strength of 840 pounds per linear foot of solid wall segment. The tabulated lengths are permitted to be reduced by multiplying by the applicable reduction factor for design strength, R_3, from Table R608.7(4).

f. The reduction factors, R_1, R_2 and R_3, in Tables R608.7(2), R608.7(3), and R608.7(4), respectively, are permitted to be compounded, subject to the limitations of Note b. However, the minimum number and minimum length of solid wall segments in each wall line shall comply with Sections R608.7.1 and R608.7.2.1, respectively.

g. For intermediate values of sidewall length, endwall length, roof slope and basic wind speed, use the next higher value, or determine by interpolation.

TABLE R608.7(1C)
UNREDUCED LENGTH, *UR*, OF SOLID WALL REQUIRED IN EACH EXTERIOR SIDEWALL FOR WIND PARALLEL TO RIDGE[a, c, d, e, f, g]

SIDEWALL LENGTH (feet)	ENDWALL LENGTH (feet)	ROOF SLOPE	UNREDUCED LENGTH, *UR*, OF SOLID WALL REQUIRED IN SIDEWALLS FOR WIND PARALLEL TO RIDGE (feet)						
			Basic Wind Speed (mph) Exposure						
			115B	120B	130B	140B	150B	160B	Minimum[b]
			—	—	110C	119C	127C	136C	
			—	—	—	110D	117D	125D	
			One story or top story of two story						
< 30	15	< 1:12	1.08	1.18	1.39	161	1.84	2.10	0.90
		5:12	1.29	1.40	1.65	1.91	2.19	2.49	1.08
		7:12	1.38	1.50	1.76	2.04	2.35	2.67	1.17
		12:12	1.63	1.78	2.09	2.42	2.78	3.16	1.39
	30	< 1:12	2.02	2.20	2.59	3.00	3.44	3.92	1.90
		5:12	2.73	2.97	3.48	4.04	4.64	5.28	2.62
		7:12	3.05	3.32	3.89	4.51	5.18	5.89	2.95
		12:12	3.93	4.27	5.02	5.82	6.68	7.60	3.86
	45	< 1:12	3.03	3.30	3.87	4.49	5.15	5.86	2.99
		5:12	4.55	4.96	5.82	6.75	7.74	8.81	4.62
		7:12	5.24	5.71	6.70	7.77	8.92	10.15	5.36
		12:12	7.16	7.79	9.14	10.61	12.17	13.85	7.39
	60	< 1:12	4.11	4.47	5.25	6.09	6.99	7.96	4.18
		5:12	6.78	7.39	8.67	10.05	11.54	13.13	7.07
		7:12	8.00	8.71	10.22	11.85	13.61	15.48	8.38
		12:12	11.35	12.36	14.51	16.82	19.31	21.97	12.00
60	45	< 1:12	3.17	3.46	4.06	4.70	5.40	6.14	2.99
		5:12	4.75	5.18	6.07	7.04	8.09	9.20	4.62
		7:12	5.47	5.96	6.99	8.11	9.31	10.59	5.36
		12:12	7.45	8.11	9.52	11.04	12.68	14.43	7.39
	60	< 1:12	4.41	4.81	5.64	6.54	7.51	8.54	4.18
		5:12	7.22	7.86	9.23	10.70	12.29	13.98	7.07
		7:12	8.50	9.25	10.86	12.59	14.46	16.45	8.38
		12:12	12.02	13.09	15.36	17.81	20.45	23.27	12.00

(continued)

TABLE R608.7(1C)—continued
UNREDUCED LENGTH, *UR*, OF SOLID WALL REQUIRED IN EACH EXTERIOR SIDEWALL FOR WIND PARALLEL TO RIDGE[a, c, d, e, f, g]

SIDEWALL LENGTH (feet)	ENDWALL LENGTH (feet)	ROOF SLOPE	UNREDUCED LENGTH, *UR*, OF SOLID WALL REQUIRED IN SIDEWALLS FOR WIND PARALLEL TO RIDGE (feet)						
			Basic Wind Speed Exposure (mph)						
			115B	120B	130B	140B	150B	160B	Minimum[b]
			—	—	110C	119C	127C	136C	
			—	—	—	110D	117D	125D	
			First story of two story						
< 30	15	< 1:12	3.03	3.30	3.88	4.49	5.16	5.87	2.52
		5:12	3.24	3.52	4.14	4.80	5.51	6.26	2.70
		7:12	3.33	3.62	4.25	4.93	5.66	6.44	2.79
		12:12	3.58	3.90	4.58	5.31	6.10	6.94	3.01
	30	< 1:12	5.50	5.99	7.03	8.16	9.36	10.65	5.14
		5:12	6.21	6.76	7.93	9.20	10.56	12.01	5.86
		7:12	6.52	7.10	8.34	9.67	11.10	12.63	6.19
		12:12	7.41	8.06	9.46	10.97	12.60	14.33	7.10
	45	< 1:12	8.00	8.71	10.22	11.85	13.61	15.48	7.85
		5:12	9.52	10.37	12.17	14.11	16.20	18.43	9.48
		7:12	10.21	11.12	13.05	15.14	17.38	19.77	10.21
		12:12	12.13	13.20	15.50	17.97	20.63	23.47	12.25
	60	< 1:12	10.56	11.50	13.50	15.65	17.97	20.44	10.65
		5:12	13.24	14.41	16.91	19.62	22.52	25.62	13.54
		7:12	14.45	15.73	18.46	21.41	24.58	27.97	14.85
		12:12	17.80	19.38	22.75	26.38	30.29	34.46	18.48
60	45	< 1:12	8.39	9.14	10.72	12.44	14.28	16.25	7.85
		5:12	9.97	10.86	12.74	14.78	16.97	19.30	9.48
		7:12	10.69	11.64	13.66	15.84	18.19	20.69	10.21
		12:12	12.67	13.80	16.19	18.78	21.56	24.53	12.25
	60	< 1:12	11.37	12.38	14.53	16.85	19.35	22.01	10.65
		5:12	14.18	15.44	18.12	21.02	24.13	27.45	13.54
		7:12	15.46	16.83	19.75	22.91	26.29	29.92	14.85
		12:12	18.98	20.66	24.25	28.13	32.29	36.74	18.48

For SI: 1 inch = 25.4 mm, 1 foot = 304.8 mm, 1 mile per hour = 0.447 m/s, 1 pound-force per linear foot = 0.146 kN/m, 1 pound per square foot = 47.88 Pa.

a. Tabulated lengths were derived by calculating design wind pressures in accordance with Figure 28.4-1 of ASCE 7 for a building with a mean roof height of 35 feet, topographic factor, K_{zt}, equal to 1.0, and Risk Category II. The design pressures were used to calculate forces to be resisted by solid wall segments in each sidewall. The forces to be resisted by each wall line were then divided by the default design strength of 840 pounds per linear foot of length to determine the unreduced length, *UR*, of solid wall length required in each sidewall. The actual mean roof height of the building shall not exceed the least horizontal dimension of the building.

b. Tabulated lengths in the "minimum" column are based on the requirement of Section 28.4.4 of ASCE 7 that the main windforce-resisting system be designed for a minimum pressure of 16 psf multiplied by the wall area of the building and 8 psf multiplied by the roof area of the building projected onto a vertical plane normal to the assumed wind direction. Tabulated lengths in shaded cells are less than the "minimum" value. Where the minimum controls, it is permitted to be reduced in accordance with Notes c, d and e. See Section R608.7.1.1.

c. For buildings with a mean roof height of less than 35 feet, tabulated lengths are permitted to be reduced by multiplying by the appropriate factor, R_1, from Table R608.7(2). The reduced length shall be not less than the "minimum" value shown in the table.

d. Tabulated lengths for "one story or top story of two story" are based on a floor-to-ceiling height of 10 feet. Tabulated lengths for "first story of two story" are based on floor-to-ceiling heights of 10 feet each for the first and second story. For floor-to-ceiling heights less than assumed, use the lengths in this table or Table R608.7(1A) or (1B), or multiply the value in the table by the reduction factor, R_2, from Table R608.7(3).

e. Tabulated lengths are based on the default design shear strength of 840 pounds per linear foot of solid wall segment. The tabulated lengths are permitted to be reduced by multiplying by the applicable reduction factor for design strength, R_3, from Table R608.7(4).

f. The reduction factors, R_1, R_2 and R_3, in Tables R608.7(2), R608.7(3), and R608.7(4), respectively, are permitted to be compounded, subject to the limitations of Note b. However, the minimum number and minimum length of solid walls segments in each wall line shall comply with Sections R608.7.1 and R608.7.2.1, respectively.

g. For intermediate values of sidewall length, endwall length, roof slope and basic wind speed, use the next higher value, or determine by interpolation.

TABLE R608.7(2)
REDUCTION FACTOR, R_1, FOR BUILDINGS WITH MEAN ROOF HEIGHT LESS THAN 35 FEET[a]

MEAN ROOF HEIGHT[b, c] (feet)	REDUCTION FACTOR R_1, FOR MEAN ROOF HEIGHT		
	Exposure category		
	B	C	D
< 15	0.96	0.84	0.87
20	0.96	0.89	0.91
25	0.96	0.93	0.94
30	0.96	0.97	0.98
35	1.00	1.00	1.00

For SI: 1 foot = 304.8 mm, 1 degree = 0.0175 rad.

a. See Section R608.7.1.1 and Note c to Table R608.7(1A) for application of reduction factors in this table. This reduction is not permitted for "minimum" values.

b. For intermediate values of mean roof height, use the factor for the next greater height, or determine by interpolation.

c. Mean roof height is the average of the roof eave height and height of the highest point on the roof surface, except that for roof slopes of less than or equal to $2^1/_8$:12 (10 degrees), the mean roof height is permitted to be taken as the roof eave height.

TABLE R608.7(3)
REDUCTION FACTOR, R_2, FOR FLOOR-TO-CEILING WALL HEIGHTS LESS THAN 10 FEET[a, b]

STORY UNDER CONSIDERATION	FLOOR-TO-CEILING HEIGHT[c] (feet)	ENDWALL LENGTH (feet)	ROOF SLOPE	REDUCTION FACTOR, R_2
Endwalls—for wind perpendicular to ridge				
One story or top story of two story	8	15	< 5:12	0.83
			7:12	0.90
			12:12	0.94
		60	< 5:12	0.83
			7:12	0.95
			12:12	0.98
First story of two story	16 combined first and second story	15	< 5:12	0.83
			7:12	0.86
			12:12	0.89
		60	< 5:12	0.83
			7:12	0.91
			12:12	0.95
Sidewalls—for wind parallel to ridge				
One story or top story of two story	8	15	< 1:12	0.84
			5:12	0.87
			7:12	0.88
			12:12	0.89
		60	< 1:12	0.86
			5:12	0.92
			7:12	0.93
			12:12	0.95
First story of two story	16 combined first and second story	15	< 1:12	0.83
			5:12	0.84
			7:12	0.85
			12:12	0.86
		60	< 1:12	0.84
			5:12	0.87
			7:12	0.88
			12:12	0.90

For SI: 1 foot = 304.8 mm.

a. See Section R608.7.1.1 and Note d to Table R608.7(1A) for application of reduction factors in this table.

b. For intermediate values of endwall length and roof slope, use the next higher value or determine by interpolation.

c. Tabulated values in Table R608.7(1A) and (1C) for "one story or top story of two story" are based on a floor-to-ceiling height of 10 feet. Tabulated values in Table R608.7(1B) and (1C) for "first story of two story" are based on floor-to-ceiling heights of 10 feet each for the first and second story. For floor-to-ceiling heights between those shown in this table and those assumed in Table R608.7(1A), (1B) or (1C), use the solid wall lengths in Table R608.7(1A), (1B) or (1C), or determine the reduction factor by interpolating between 1.0 and the factor shown in this table.

TABLE R608.7(4)
REDUCTION FACTOR FOR DESIGN STRENGTH, R_3, FOR FLAT, WAFFLE- AND SCREEN-GRID WALLS[a, c]

NOMINAL THICKNESS OF WALL (inches)	VERTICAL BARS AT EACH END OF SOLID WALL SEGMENT		VERTICAL REINFORCEMENT LAYOUT DETAIL [see Figure R608.7(2)]	REDUCTION FACTOR, R_3, FOR LENGTH OF SOLID WALL			
				Horizontal and vertical shear reinforcement provided			
				No		Yes[d]	
	Number of bars	Bar size		40,000[b]	60,000[b]	40,000[b]	60,000[b]
Flat walls							
4	2	4	1	0.74	0.61	0.74	0.50
	3	4	2	0.61	0.61	0.52	0.27
	2	5	1	0.61	0.61	0.48	0.25
	3	5	2	0.61	0.61	0.26	0.18
6	2	4	3	0.70	0.48	0.70	0.48
	3	4	4	0.49	0.38	0.49	0.33
	2	5	3	0.46	0.38	0.46	0.31
	3	5	4	0.38	0.38	0.32	0.16
8	2	4	3	0.70	0.47	0.70	0.47
	3	4	5	0.47	0.32	0.47	0.32
	2	5	3	0.45	0.31	0.45	0.31
	4	4	6	0.36	0.28	0.36	0.25
	3	5	5	0.31	0.28	0.31	0.16
	4	5	6	0.28	0.28	0.24	0.12
10	2	4	3	0.70	0.47	0.70	0.47
	2	5	3	0.45	0.30	0.45	0.30
	4	4	7	0.36	0.25	0.36	0.25
	6	4	8	0.25	0.22	0.25	0.13
	4	5	7	0.24	0.22	0.24	0.12
	6	5	8	0.22	0.22	0.12	0.08
Waffle-grid walls[e]							
6	2	4	3	0.78	0.78	0.70	0.48
	3	4	4	0.78	0.78	0.49	0.25
	2	5	3	0.78	0.78	0.46	0.23
	3	5	4	0.78	0.78	0.24	0.16
8	2	4	3	0.78	0.78	0.70	0.47
	3	4	5	0.78	0.78	0.47	0.24
	2	5	3	0.78	0.78	0.45	0.23
	4	4	6	0.78	0.78	0.36	0.18
	3	5	5	0.78	0.78	0.23	0.16
	4	5	6	0.78	0.78	0.18	0.13
Screen-grid walls[e]							
6	2	4	3	0.93	0.93	0.70	0.48
	3	4	4	0.93	0.93	0.49	0.25
	2	5	3	0.93	0.93	0.46	0.23
	3	5	4	0.93	0.93	0.24	0.16

For SI: 1 inch = 25.4 mm, 1,000 pounds per square inch = 6.895 MPa.

a. See Note e to Table R608.7(1A) for application of adjustment factors in this table.

b. Yield strength in pounds per square inch of vertical wall reinforcement at ends of solid wall segments.

c. Values are based on concrete with a specified compressive strength, f'_c, of 2,500 psi. Where concrete with f'_c of not less than 3,000 psi is used, values in shaded cells are permitted to be decreased by multiplying by 0.91.

d. Horizontal and vertical shear reinforcement shall be provided in accordance with Section R608.7.2.2.

e. Each end of each solid wall segment shall have rectangular flanges. In the through-the-wall dimension, the flange shall be not less than $5^1/_2$ inches for 6-inch-nominal waffle- and screen-grid walls, and not less than $7^1/_2$ inches for 8-inch-nominal waffle-grid walls. In the in-plane dimension, flanges shall be long enough to accommodate the vertical reinforcement required by the layout detail selected from Figure R608.7(2) and provide the cover required by Section R608.5.4.1. If necessary to achieve the required dimensions, form material shall be removed or use of flat wall forms is permitted.

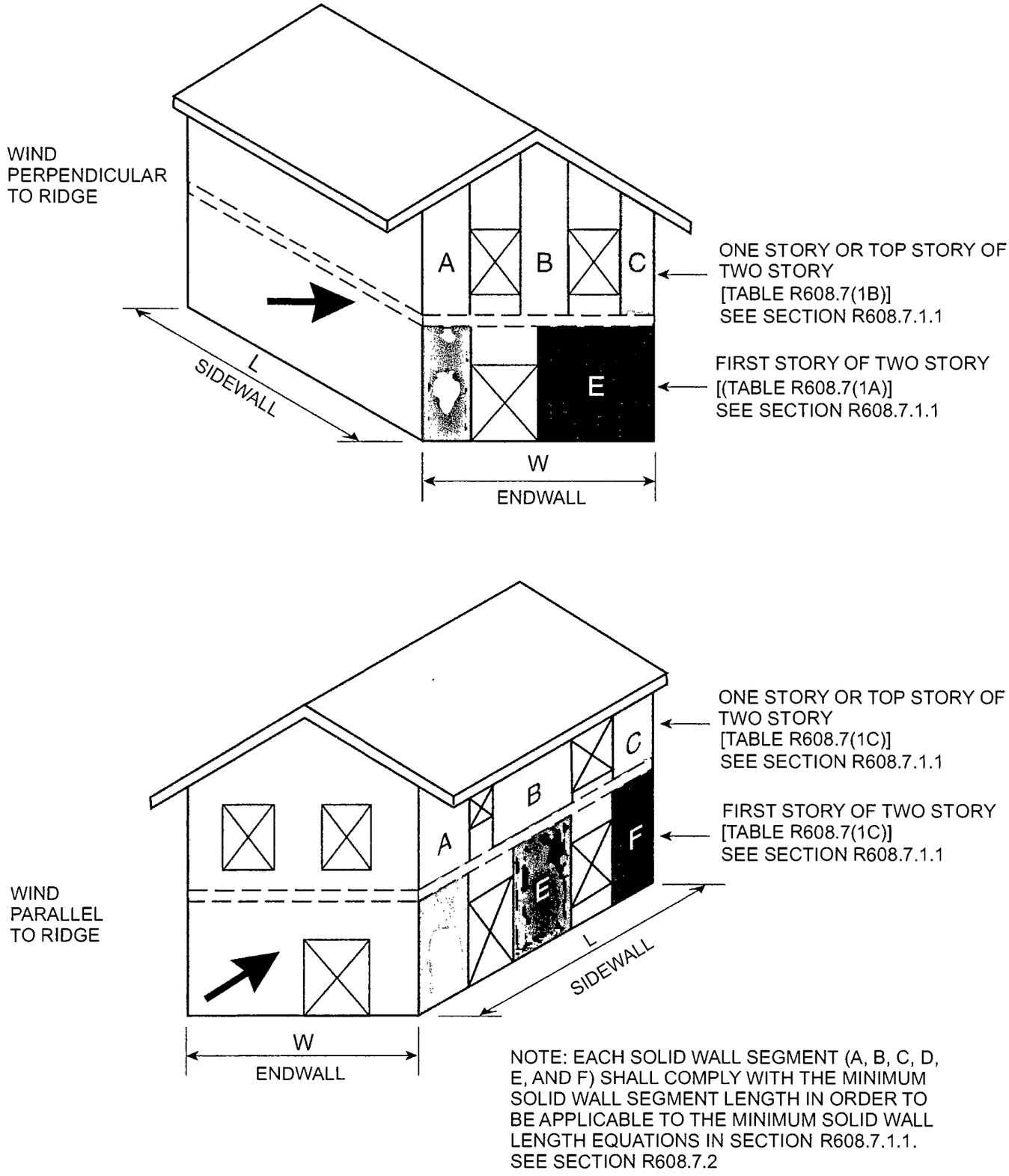

FIGURE R608.7(1)
MINIMUM SOLID WALL LENGTH

DETAIL NO.	NOM. WALL THICKNESS, IN.	REINFORCEMENT LAYOUT AT ENDS OF SOLID WALL SEGMENTS	NOTES
1	4	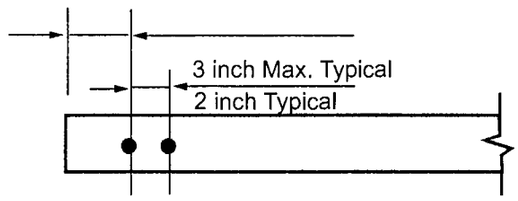	For SI: 1 inch = 25.4 mm. 1. See Table R608.7(4) for use of details. 2. Minimum length of solid wall segment and size and grade of reinforcement in each end of each solid wall segment shall be determined from Table R608.7(4). 3.. For minimum cover requirements, see Section R608.5.4.1. 4.. For details 3 - 8 where two or more bars are in the same row parallel to the end of the segment, place bars so that corner bars are as close to the sides of the wall segments as minimum cover requirements of Section R608.5.4.1 will permit. 5.. For waffle- and screen-grid walls, each end of each solid wall segment shall have rectangular flanges. In the through-the-wall dimension, the flange shall be not less than 5½ inches for 6-inch nominal waffle- and screen-grid forms, and not less than 7½ inches for 8-inch nominal waffle-grid forms. In the in-plane dimension, flanges shall be long enough to accommodate the vertical reinforcement required by the layout detail selected and provide the cover required by Section R608.5.4.1. If necessary to achieve the required dimensions, form material shall be removed or flat wall forms are permitted. See Table R608.7(4), Note e.
2	4	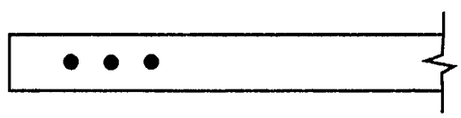	
3	6 8 10	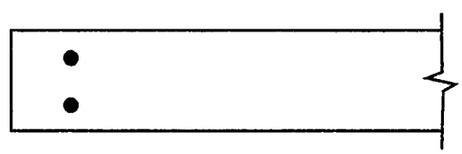	
4	6	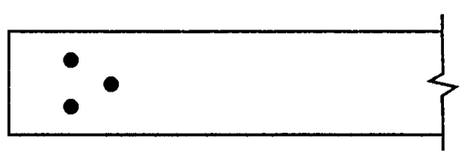	
5	8	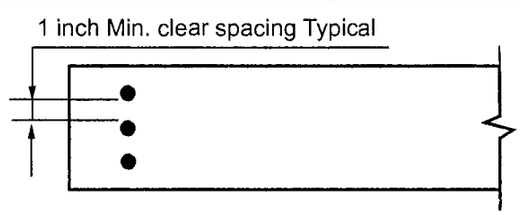	
6	8	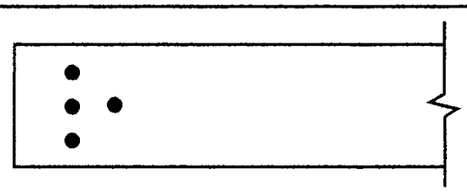	
7	10	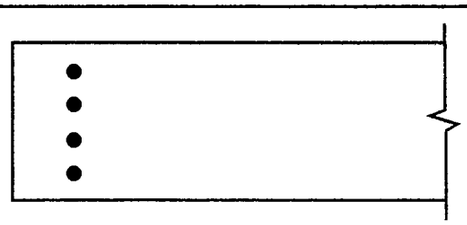	
8	10	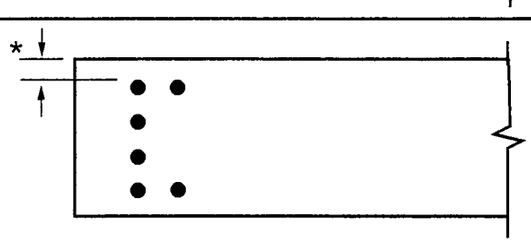 * For minimum cover see Section R608.5.4.1	

FIGURE R608.7(2)
VERTICAL REINFORCEMENT LAYOUT DETAIL

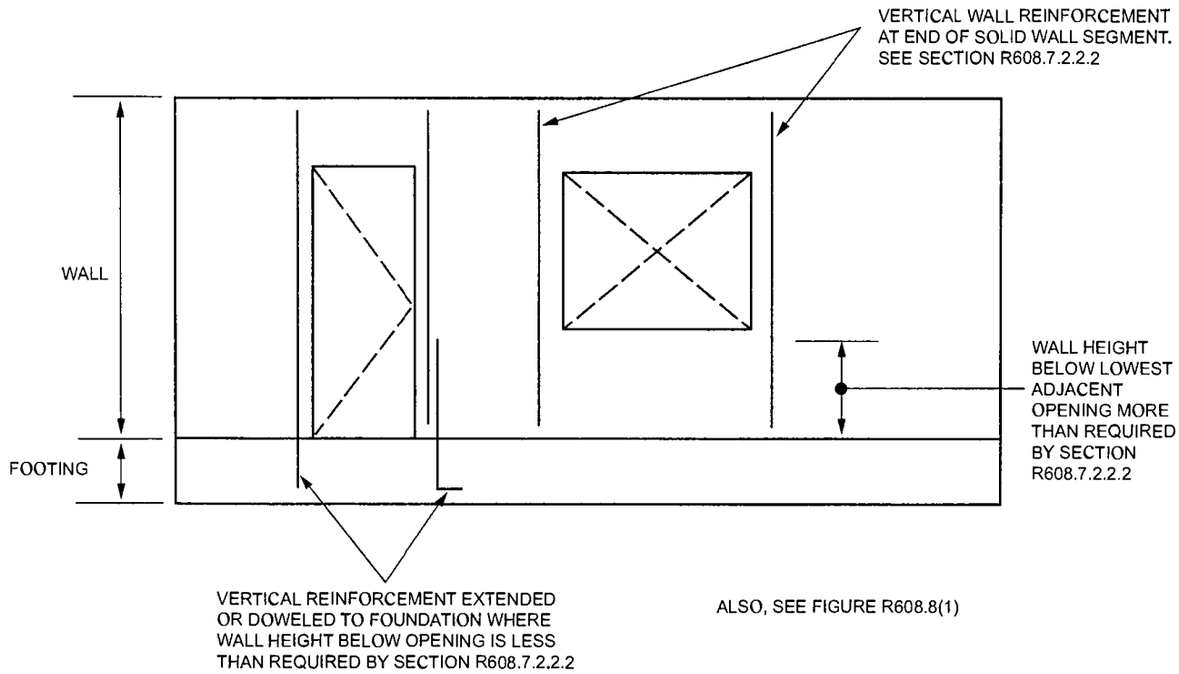

FIGURE R608.7(3)
VERTICAL WALL REINFORCEMENT ADJACENT TO WALL OPENINGS

R608.7.2.2.3 Vertical shear reinforcement. Where reduction factors for design strength, R_3, from Table R608.7(4) based on horizontal and vertical shear reinforcement being provided are used, solid wall segments shall have vertical reinforcement consisting of minimum No. 4 bars. Vertical shear reinforcement shall be the same grade of steel required by Section R608.7.2.2.2 for the vertical reinforcement at the ends of solid wall segments. The spacing of vertical reinforcement throughout the length of the segment shall not exceed the smaller of one third the length of the segment, and 18 inches (457 mm). Vertical shear reinforcement shall be continuous between stories in accordance with Section R608.6.3, and shall terminate in accordance with Section R608.6.4. Vertical shear reinforcement required by this section is permitted to be used for vertical reinforcement required by Table R608.6(1), R608.6(2), R608.6(3) or R608.6(4), whichever is applicable.

R608.7.2.3 Solid wall segments at corners. At all interior and exterior corners of exterior walls, a solid wall segment shall extend the full height of each wall *story*. The segment shall have the length required to develop the horizontal reinforcement above and below the adjacent opening in tension in accordance with Section R608.5.4.4. For an exterior corner, the limiting dimension is measured on the outside of the wall, and for an interior corner the limiting dimension is measured on the inside of the wall. See Section R608.8.1. The length of a segment contributing to the required length of solid wall shall comply with Section R608.7.2.1.

The end of a solid wall segment complying with the minimum length requirements of Section R608.7.2.1 shall be located not more than 6 feet (1829 mm) from each corner.

R608.8 Requirements for lintels and reinforcement around openings.

R608.8.1 Reinforcement around openings. Reinforcement shall be provided around openings in walls equal to or greater than 2 feet (610 mm) in width in accordance with this section and Figure R608.8(1), in addition to the minimum wall reinforcement required by Sections R404.1.3, R608.6 and R608.7. Vertical wall reinforcement required by this section is permitted to be used as reinforcement at the ends of solid wall segments required by Section R608.7.2.2.2 provided it is located in accordance with Section R608.8.1.2. Wall openings shall have a minimum depth of concrete over the width of the opening of 8 inches (203 mm) in flat walls and waffle-grid walls, and 12 inches (305 mm) in screen-grid walls. Wall openings in waffle-grid and screen-grid walls shall be located such that not less than one-half of a vertical core occurs along each side of the opening.

R608.8.1.1 Horizontal reinforcement. Lintels complying with Section R608.8.2 shall be provided above wall openings equal to or greater than 2 feet (610 mm) in width.

Openings equal to or greater than 2 feet (610 mm) in width shall have not less than one No. 4 bar placed within 12 inches (305 mm) of the bottom of the opening. See Figure R608.8(1).

Horizontal reinforcement placed above and below an opening shall extend beyond the edges of the opening the dimension required to develop the bar in tension in accordance with Section R608.5.4.4.

Exception: Continuous horizontal wall reinforcement placed within 12 inches (305 mm) of the top of

the wall story as required in Sections R404.1.3.2 and R608.6.2 is permitted in lieu of top or bottom lintel reinforcement required by Section R608.8.2 provided that the continuous horizontal wall reinforcement meets the location requirements specified in Figures R608.8(2), R608.8(3), and R608.8(4) and the size requirements specified in Tables R608.8(2) through R608.8(10).

R608.8.1.2 Vertical reinforcement. Not less than one No. 4 bar [Grade 40 (280 MPa)] shall be provided on each side of openings equal to or greater than 2 feet (610 mm) in width. The vertical reinforcement required by this section shall extend the full height of the wall story and shall be located within 12 inches (305 mm) of each side of the opening. The vertical reinforcement required on each side of an opening by this section is permitted to serve as reinforcement at the ends of solid wall segments in accordance with Section R608.7.2.2.2, provided it is located as required by the applicable detail in Figure R608.7(2). Where the vertical reinforcement required by this section is used to satisfy the requirements of Section R608.7.2.2.2 in waffle- and screen-grid walls, a concrete flange shall be created at the ends of the solid wall segments in accordance with Table R608.7(4), Note e. In the top-most story, the reinforcement shall terminate in accordance with Section R608.6.4.

R608.8.2 Lintels. Lintels shall be provided over all openings equal to or greater than 2 feet (610 mm) in width. Lintels with uniform loading shall conform to Sections R608.8.2.1 and R608.8.2.2, or Section R608.8.2.3. Lintels supporting concentrated loads, such as from roof or floor beams or girders, shall be designed in accordance with ACI 318.

R608.8.2.1 Lintels designed for gravity load-bearing conditions. Where a lintel will be subjected to gravity load conditions 1 through 5 of Table R608.8(1), the clear span of the lintel shall not exceed that permitted by Tables R608.8(2) through R608.8(8). The maximum clear span of lintels with and without stirrups in flat walls shall be determined in accordance with Tables R608.8(2) through R608.8(5), and constructed in accordance with Figure R608.8(2). The maximum clear span of lintels with and without stirrups in waffle-grid walls shall be determined in accordance with Tables R608.8(6) and R608.8(7), and constructed in accordance

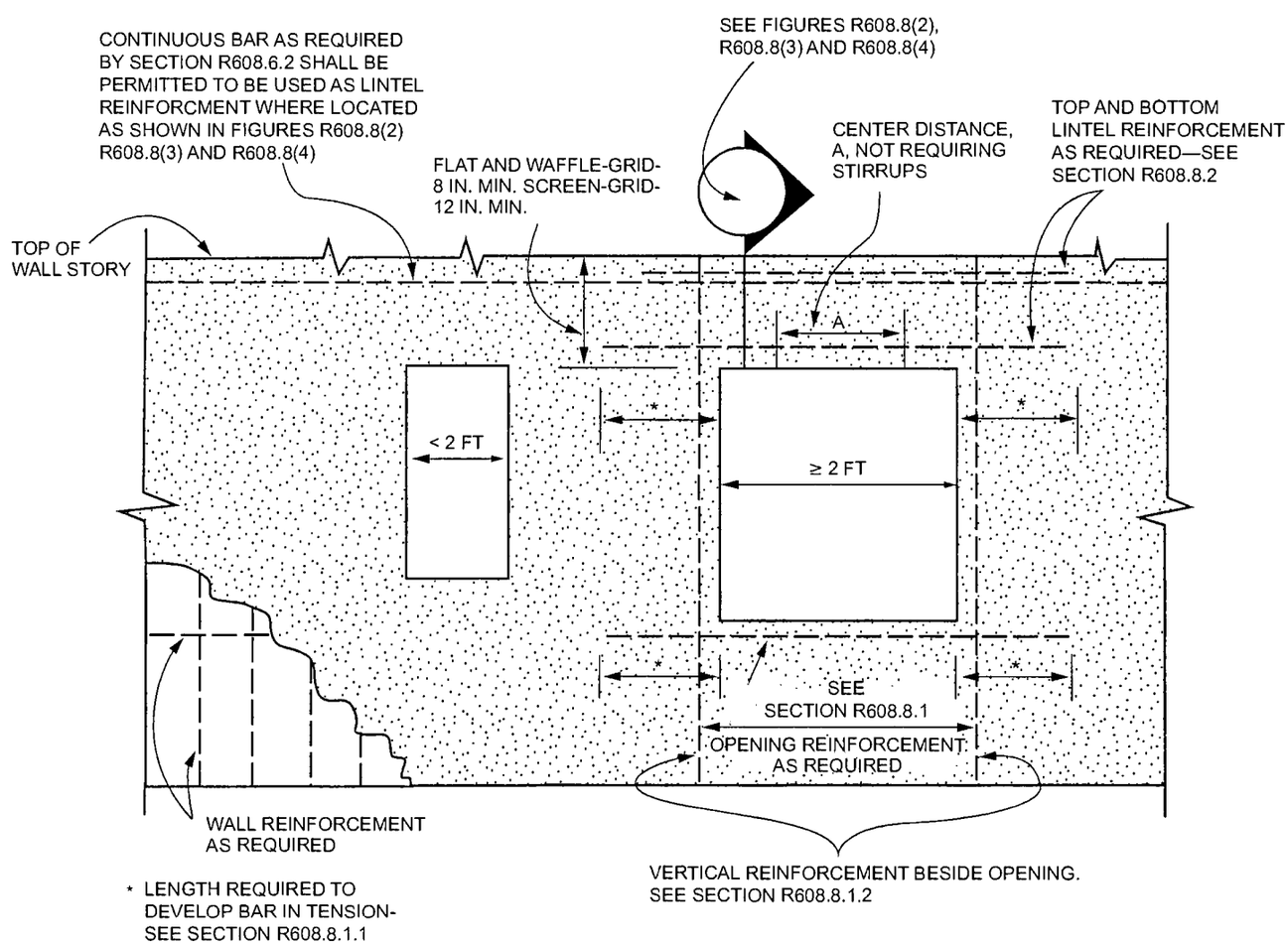

ELEVATION OF WALL

For SI: 1 inch = 25.4 mm, 1 foot = 304.8 mm.

FIGURE R608.8(1)
REINFORCEMENT OF OPENINGS

with Figure R608.8(3). The maximum clear span of lintels with and without stirrups in screen-grid walls shall be determined in accordance with Table R608.8(8), and constructed in accordance with Figure R608.8(4).

Where required by the applicable table, No. 3 stirrups shall be installed in lintels at a maximum spacing of *d/2* where *d* equals the depth of the lintel, *D*, less the cover of the concrete as shown in Figures R608.8(2) through R608.8(4). The smaller value of *d* computed for the top and bottom bar shall be used to determine the maximum stirrup spacing. Where stirrups are required in a lintel with a single bar or two bundled bars in the top and bottom, they shall be fabricated like the letter "c" or "s" with 135-degree (2.36 rad) standard hooks at each end that comply with Section R608.5.4.5 and Figure R608.5.4(3) and installed as shown in Figures R608.8(2) through R608.8(4). Where two bars are required in the top and bottom of the lintel and the bars are not bundled, the bars shall be separated by not less than 1 inch (25 mm). The free end of the stirrups shall be fabricated with 90- or 135-degree (1.57 or 2.36 rad) standard hooks that comply with Section R608.5.4.5 and Figure R608.5.4(3) and installed as shown in Figures R608.8(2) and R608.8(3). For flat, waffle-grid and screen-grid lintels, stirrups are not required in the center distance, *A*, portion of spans in accordance with Figure R608.8(1) and Tables R608.8(2) through R608.8(8). See Section R608.8.2.2, Item 5, for requirement for stirrups through out lintels with bundled bars.

R608.8.2.2 Bundled bars in lintels. It is permitted to bundle two bars in contact with each other in lintels if all of the following are observed:

1. Bars equal to or less than No. 6 are bundled.
2. Where the wall thickness is not sufficient to provide not less than 3 inches (76 mm) of clear space beside bars (total on both sides) oriented horizontally in a bundle, the bundled bars shall be oriented in a vertical plane.
3. Where vertically oriented bundled bars terminate with standard hooks to develop the bars in tension beyond the support (see Section R608.5.4.4), the hook extensions shall be staggered to provide not less than 1 inch (25 mm) clear spacing between the extensions.
4. Bundled bars shall not be lap spliced within the lintel span and the length on each end of the lintel that is required to develop the bars in tension.
5. Bundled bars shall be enclosed within stirrups throughout the length of the lintel. Stirrups and the installation thereof shall comply with Section R608.8.2.1.

R608.8.2.3 Lintels without stirrups designed for nonload-bearing conditions. The maximum clear span of lintels without stirrups designed for nonload-bearing conditions of Table R608.8(1).1 shall be determined in accordance with this section. The maximum clear span of lintels without stirrups in flat walls shall be determined in accordance with Table R608.8(9), and the maximum clear span of lintels without stirrups in walls of waffle-grid or screen-grid construction shall be determined in accordance with Table R608.8(10).

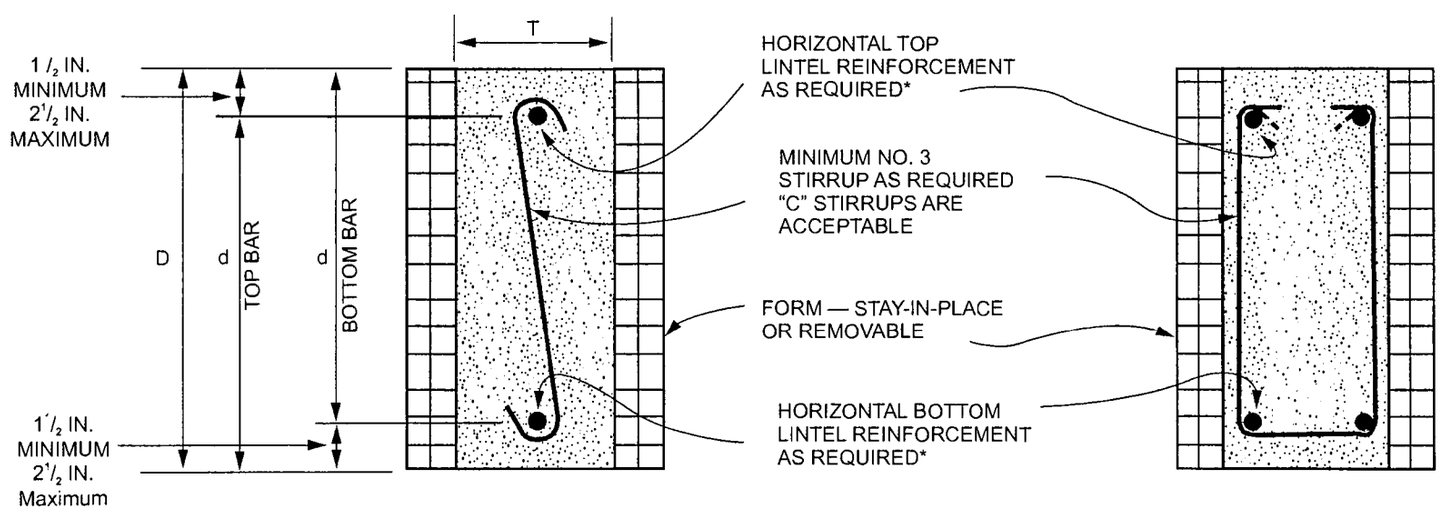

* FOR BUNDLED BARS, SEE SECTION R608.8.2.2.
SECTION CUT THROUGH FLAT WALL LINTEL

For SI: 1 inch = 25.4 mm.

FIGURE R608.8(2)
LINTEL FOR FLAT WALLS

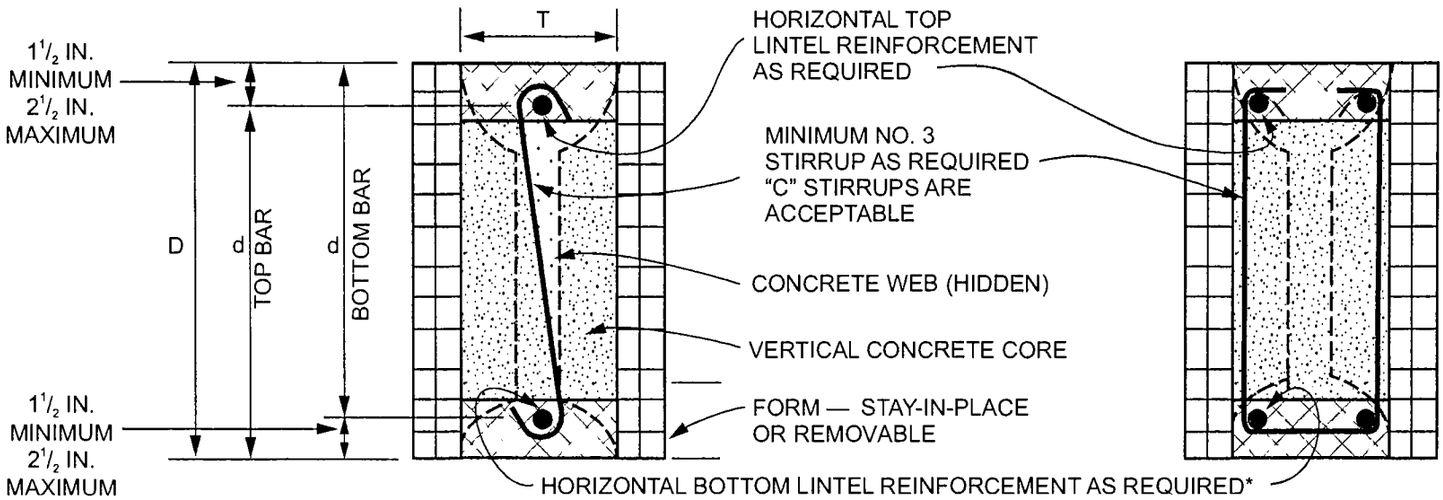

(a) SINGLE FORM HEIGHT SECTION CUT THROUGH VERTICAL CORE OF A WAFFLE-GRID LINTEL

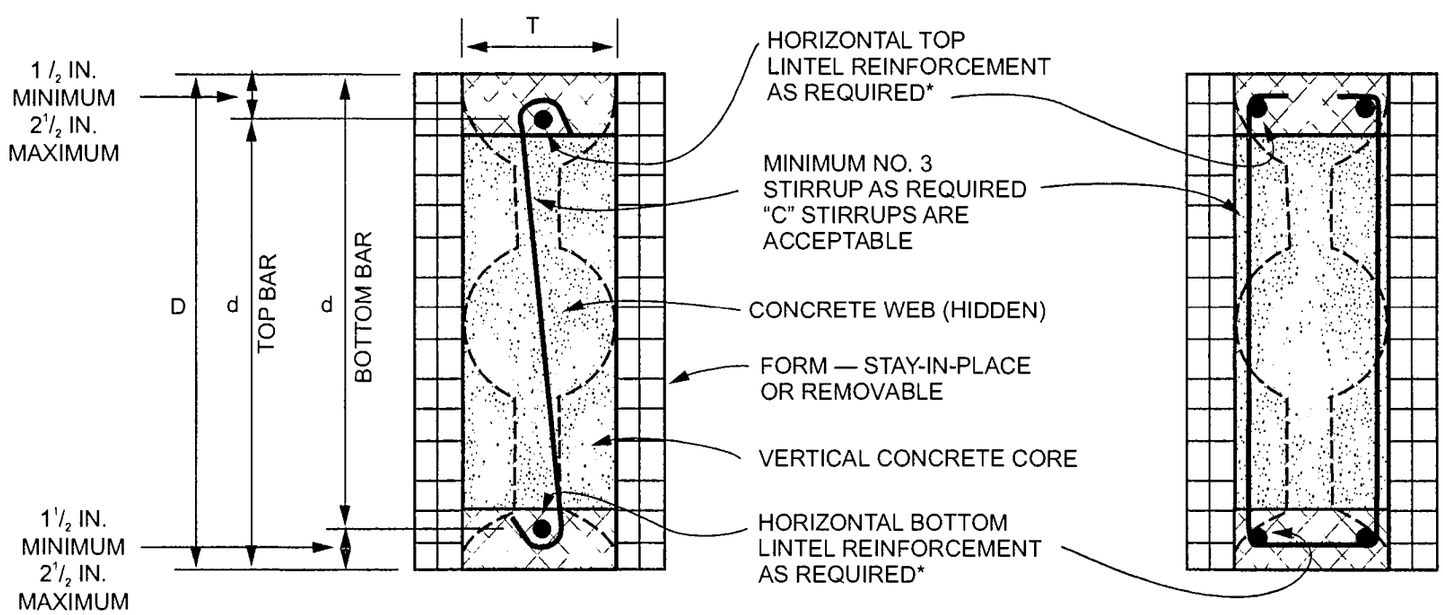

(b) DOUBLE FORM HEIGHT SECTION CUT THROUGH VERTICAL CORE OF A WAFFLE-GRID LINTEL

*FOR BUNDLED BARS, SEE SECTION R608.8.2.2.

NOTE: CROSS HATCHING REPRESENTS THE AREA IN WHICH FORM MATERIAL SHALL BE REMOVED, IF NECESSARY, TO CREATE FLANGES CONTINUOUS THE LENGTH OF THE LINTEL. FLANGES SHALL HAVE A MINIMUM THICKNESS OF 3 IN., AND A MINIMUM WIDTH OF 5 IN. AND 7 IN. IN 6 IN. NOMINAL AND 8 IN. NOMINAL WAFFLE-GRID WALLS, RESPECTIVELY. SEE NOTE a TO TABLES R608.8(6) AND R608.8(10).

For SI: 1 inch = 25.4 mm.

FIGURE R608.8(3)
LINTELS FOR WAFFLE-GRID WALLS

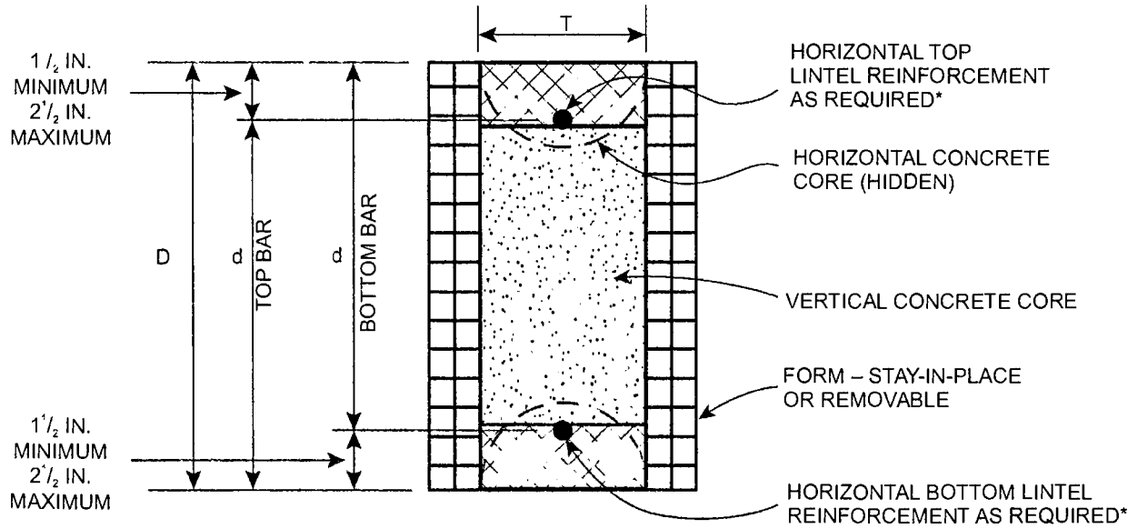

(a) SINGLE FORM HEIGHT SECTION CUT THROUGH VERTICAL CORE OF A SCREEN-GRID LINTEL

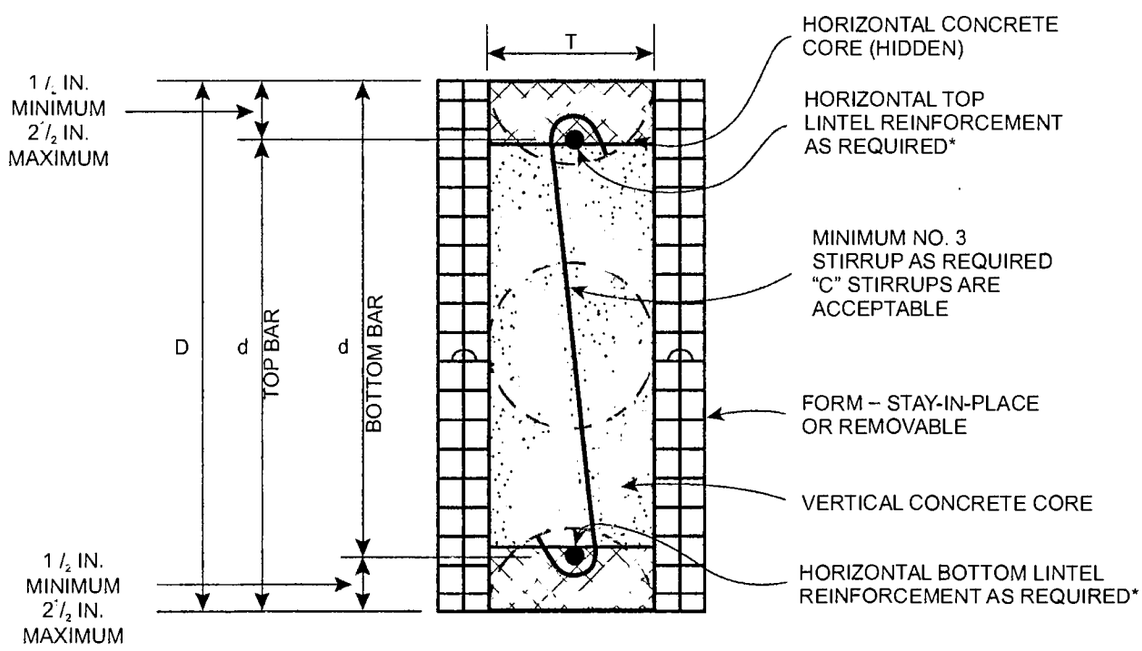

(b) DOUBLE FORM HEIGHT SECTION CUT THROUGH VERTICAL CORE OF A SCREEN-GRID LINTEL

*FOR BUNDLED BARS, SEE SECTION R608.8.2.2

NOTE: CROSS HATCHING REPRESENTS THE AREA IN WHICH FORM MATERIAL SHALL BE REMOVED, IF NECESSARY, TO CREATE FLANGES CONTINUOUS THE LENGTH OF THE LINTEL. FLANGES SHALL HAVE A MINIMUM THICKNESS OF 2.5 IN. AND A MINIMUM WIDTH OF 5 IN. SEE NOTE a TO TABLES R608.8(8) AND R608.8(10).

For SI: 1 inch = 25.4 mm.

FIGURE R608.8(4)
LINTELS FOR SCREEN-GRID WALLS

TABLE R608.8(1)
LINTEL DESIGN LOADING CONDITIONS[a, b, d]

DESCRIPTION OF LOADS AND OPENINGS ABOVE INFLUENCING DESIGN OF LINTEL			DESIGN LOAD CONDITION[c]
Opening in wall of top story of two-story building, or first story of one-story building			
Wall supporting loads from roof, including attic floor, if applicable, and	Top of lintel equal to or less than W/2 below top of wall		2
	Top of lintel greater than W/2 below top of wall		NLB
Wall not supporting loads from roof or attic floor			NLB
Opening in wall of first story of two-story building where wall immediately above is of concrete construction, or opening in basement wall of one-story building where wall immediately above is of concrete construction			
LB ledger board mounted to side of wall with bottom of ledger less than or equal to W/2 above top of lintel, and	Top of lintel greater than W/2 below bottom of opening in story above		1
	Top of lintel less than or equal to W/2 below bottom of opening in story above, and	Opening is entirely within the footprint of the opening in the story above	1
		Opening is partially within the footprint of the opening in the story above	4
LB ledger board mounted to side of wall with bottom of ledger more than W/2 above top of lintel			NLB
NLB ledger board mounted to side of wall with bottom of ledger less than or equal to W/2 above top of lintel, or no ledger board, and	Top of lintel greater than W/2 below bottom of opening in story above		NLB
	Top of lintel less than or equal to W/2 below bottom of opening in story above, and	Opening is entirely within the footprint of the opening in the story above	NLB
		Opening is partially within the footprint of the opening in the story above	1
Opening in basement wall of two-story building where walls of two stories above are of concrete construction			
LB ledger board mounted to side of wall with bottom of ledger less than or equal to W/2 above top of lintel, and	Top of lintel greater than W/2 below bottom of opening in story above		1
	Top of lintel less than or equal to W/2 below bottom of opening in story above, and	Opening is entirely within the footprint of the opening in the story above	1
		Opening is partially within the footprint of the opening in the story above	5
LB ledger board mounted to side of wall with bottom of ledger more than W/2 above top of lintel			NLB
NLB ledger board mounted to side of wall with bottom of ledger less than or equal to W/2 above top of lintel, or no ledger board, and	Top of lintel greater than W/2 below bottom of opening in story above		NLB
	Top of lintel less than or equal to W/2 below bottom of opening in story above, and	Opening is entirely within the footprint of the opening in the story above	NLB
		Opening is partially within the footprint of the opening in the story above	1
Opening in wall of first story of two-story building where wall immediately above is of light-framed construction, or opening in basement wall of one-story building where wall immediately above is of light-framed construction			
Wall supporting loads from roof, second floor and top-story wall of light-framed construction, and	Top of lintel equal to or less than W/2 below top of wall		3
	Top of lintel greater than W/2 below top of wall		NLB
Wall not supporting loads from roof or second floor			NLB

a. LB means load bearing, NLB means nonload bearing, and W means width of opening.

b. Footprint is the area of the wall below an opening in the story above, bounded by the bottom of the opening and vertical lines extending downward from the edges of the opening.

c. For design loading condition "NLB" see Tables R608.8(9) and R608.8(10). For all other design loading conditions, see Tables R608.8(2) through R608.8(8).

d. An NLB ledger board is a ledger attached to a wall that is parallel to the span of the floor, roof or ceiling framing that supports the edge of the floor, ceiling or roof.

TABLE R608.8(2)
MAXIMUM ALLOWABLE CLEAR SPANS FOR 4-INCH-NOMINAL THICK FLAT LINTELS IN LOAD-BEARING WALLS[a, b, c, d, e, f, m]
ROOF CLEAR SPAN 40 FEET AND FLOOR CLEAR SPAN 32 FEET

LINTEL DEPTH, D[g] (Inches)	NUMBER OF BARS AND BAR SIZE IN TOP AND BOTTOM OF LINTEL	STEEL YIELD STRENGTH[h], f_y (psi)	DESIGN LOADING CONDITION DETERMINED FROM TABLE R608.8(1)								
			1	2		3		4		5	
			Maximum ground snow load (psf)								
			—	30	70	30	70	30	70	30	70
			Maximum clear span of lintel (feet - inches)								
8	Span without stirrups[i, j]		3-2	3-4	2-4	2-6	2-2	2-1	2-0	2-0	2-0
	1-#4	40,000	5-2	5-5	4-1	4-3	3-10	3-7	3-4	2-9	2-9
		60,000	6-2	6-5	4-11	5-1	4-6	4-2	3-8	2-11	2-10
	1-#5	40,000	6-3	6-7	5-0	5-2	4-6	4-2	3-8	2-11	2-10
		60,000	DR	DR	DR	DR	DR	DR	DR	DR	DR
	Center distance A[k, l]		1-1	1-2	0-8	0-9	0-7	0-6	0-5	0-4	0-4
12	Span without stirrups[i, j]		3-4	3-7	2-9	2-11	2-8	2-6	2-5	2-2	2-2
	1-#4	40,000	6-7	7-0	5-4	5-7	5-0	4-9	4-4	3-8	3-7
		60,000	7-11	8-6	6-6	6-9	6-0	5-9	5-3	4-5	4-4
	1-#5	40,000	8-1	8-8	6-7	6-10	6-2	5-10	5-4	4-6	4-5
		60,000	9-8	10-4	7-11	8-2	7-4	6-11	6-2	4-10	4-8
	2-#4 1-#6	40,000	9-1	9-8	7-4	7-8	6-10	6-6	6-0	4-10	4-8
		60,000	DR	DR	DR	DR	DR	DR	DR	DR	DR
	Center distance A[k, l]		1-8	1-11	1-1	1-3	1-0	0-11	0-9	0-6	0-6
16	Span without stirrups[i, j]		4-7	5-0	3-11	4-0	3-8	3-7	3-4	3-1	3-0
	1-#4	40,000	6-8	7-3	5-6	5-9	5-2	4-11	4-6	3-10	3-8
		60,000	9-3	10-1	7-9	8-0	7-2	6-10	6-3	5-4	5-2
	1-#4	40,000	9-6	10-4	7-10	8-2	7-4	6-11	6-5	5-5	5-3
		60,000	11-5	12-5	9-6	9-10	8-10	8-4	7-9	6-6	6-4
	2-#4 1-#6	40,000	10-7	11-7	8-10	9-2	8-3	7-9	7-2	6-1	5-11
		60,000	12-9	13-10	10-7	11-0	9-10	9-4	8-7	6-9	6-6
	2-#5	40,000	13-0	14-1	10-9	11-2	9-11	9-2	8-2	6-6	6-3
		60,000	DR	DR	DR	DR	DR	DR	DR	DR	DR
	Center distance A[k, l]		2-3	2-8	1-7	1-8	1-4	1-3	1-0	0-9	0-8
20	Span without stirrups A[i, j]		5-9	6-5	5-0	5-2	4-9	4-7	4-4	3-11	3-11
	1-#4	40,000	7-5	8-2	6-3	6-6	5-10	5-7	5-1	4-4	4-2
		60,000	9-0	10-0	7-8	7-11	7-1	6-9	6-3	5-3	5-1
	1-#5	40,000	9-2	10-2	7-9	8-1	7-3	6-11	6-4	5-4	5-2
		60,000	12-9	14-2	10-10	11-3	10-1	9-7	8-10	7-5	7-3
	2-#4 1-#6	40,000	11-10	13-2	10-1	10-5	9-4	8-11	8-2	6-11	6-9
		60,000	14-4	15-10	12-1	12-7	11-3	10-9	9-11	8-4	8-1
	2-#5	40,000	14-7	16-2	12-4	12-9	11-4	10-6	9-5	7-7	7-3
		60,000	17-5	19-2	14-9	15-3	13-5	12-4	11-0	8-8	8-4
	2-#6	40,000	16-4	18-11	12-7	13-3	11-4	10-6	9-5	7-7	7-3
		60,000	DR	DR	DR	DR	DR	DR	DR	DR	DR
	Center distance A[k, l]		2-9	3-5	2-0	2-2	1-9	1-7	1-4	0-11	0-11

(continued)

TABLE R608.8(2)—continued
MAXIMUM ALLOWABLE CLEAR SPANS FOR 4-INCH-NOMINAL THICK FLAT LINTELS IN LOAD-BEARING WALLS[a, b, c, d, e, f, m]
ROOF CLEAR SPAN 40 FEET AND FLOOR CLEAR SPAN 32 FEET

LINTEL DEPTH, D[g] (inches)	NUMBER OF BARS AND BAR SIZE IN TOP AND BOTTOM OF LINTEL	STEEL YIELD STRENGTH[h], f_y (psi)	DESIGN LOADING CONDITION DETERMINED FROM TABLE R608.8(1)								
			1	2		3		4		5	
			Maximum ground snow load (psf)								
			—	30	70	30	70	30	70	30	70
			Maximum clear span of lintel (feet - inches)								
24	Span without stirrups[i, j]		6-11	7-9	6-1	6-3	5-9	5-7	5-3	4-9	4-8
	1-#4	40,000	8-0	9-0	6-11	7-2	6-5	6-2	5-8	4-9	4-8
		60,000	9-9	11-0	8-5	8-9	7-10	7-6	6-11	5-10	5-8
	1-#5	40,000	10-0	11-3	8-7	8-11	8-0	7-7	7-0	5-11	5-9
		60,000	13-11	15-8	12-0	12-5	11-2	10-7	9-10	8-3	8-0
	2-#4 1-#6	40,000	12-11	14-6	11-2	11-6	10-5	9-10	9-1	7-8	7-5
		60,000	15-7	17-7	13-6	13-11	12-7	11-11	11-0	9-3	9-0
	2-#5	40,000	15-11	17-11	13-7	14-3	12-8	11-9	10-8	8-7	8-4
		60,000	19-1	21-6	16-5	17-1	15-1	14-0	12-6	9-11	9-7
	2-#6	40,000	17-7	21-1	14-1	14-10	12-8	11-9	10-8	8-7	8-4
		60,000	DR	DR	DR	DR	DR	DR	DR	DR	DR
	Center distance A[k, l]		3-3	4-1	2-5	2-7	2-1	1-11	1-7	1-2	1-1

For SI: 1 inch = 25.4 mm, 1 foot = 304.8 mm, 1 pound per square inch = 6.895 kPa, 1 pound per square foot = 0.0479 kPa, Grade 40 = 280 MPa, Grade 60 = 420 MPa.

a. See Table R608.3 for tolerances permitted from nominal thickness.

b. Table values are based on concrete with a minimum specified compressive strength of 2,500 psi. See Note j.

c. Table values are based on uniform loading. See Section R608.8.2 for lintels supporting concentrated loads.

d. Deflection criterion is $L/240$, where L is the clear span of the lintel in inches, or $^1/_2$-inch, whichever is less.

e. Linear interpolation is permitted between ground snow loads and between lintel depths.

f. DR indicates design required.

g. Lintel depth, D, is permitted to include the available height of wall located directly above the lintel, provided that the increased lintel depth spans the entire length of the lintel.

h. Stirrups shall be fabricated from reinforcing bars with the same yield strength as that used for the main longitudinal reinforcement.

i. Allowable clear span without stirrups applicable to all lintels of the same depth, D. Top and bottom reinforcement for lintels without stirrups shall be not less than the least amount of reinforcement required for a lintel of the same depth and loading condition with stirrups. All other spans require stirrups spaced at not more than $d/2$.

j. Where concrete with a minimum specified compressive strength of 3,000 psi is used, clear spans for lintels without stirrups shall be permitted to be multiplied by 1.05. If the increased span exceeds the allowable clear span for a lintel of the same depth and loading condition with stirrups, the top and bottom reinforcement shall be equal to or greater than that required for a lintel of the same depth and loading condition that has an allowable clear span that is equal to or greater than that of the lintel without stirrups that has been increased.

k. Center distance, A, is the center portion of the clear span where stirrups are not required. This is applicable to all longitudinal bar sizes and steel yield strengths.

l. Where concrete with a minimum specified compressive strength of 3,000 psi is used, center distance, A, shall be permitted to be multiplied by 1.10.

m. The maximum clear opening width between two solid wall segments shall be 18 feet. See Section R608.7.2.1. Lintel clear spans in the table greater than 18 feet are shown for interpolation and information only.

TABLE R608.8(3)
MAXIMUM ALLOWABLE CLEAR SPANS FOR 6-INCH-NOMINAL THICK FLAT LINTELS IN LOAD-BEARING WALLS[a, b, c, d, e, f, m]
ROOF CLEAR SPAN 40 FEET AND FLOOR CLEAR SPAN 32 FEET

LINTEL DEPTH, D[g] (inches)	NUMBER OF BARS AND BAR SIZE IN TOP AND BOTTOM OF LINTEL	STEEL YIELD STRENGTH[h], f_y (psi)	DESIGN LOADING CONDITION DETERMINED FROM TABLE R608.8(1)								
			1	2		3		4		5	
			Maximum ground snow load (psf)								
			—	30	70	30	70	30	70	30	70
			Maximum clear span of lintel (feet - inches)								
8	Span without stirrups[i, j]		4-2	4-8	3-1	3-3	2-10	2-6	2-3	2-0	2-0
	1-#4	40,000	5-1	5-5	4-2	4-3	3-10	3-6	3-3	2-8	2-7
		60,000	6-2	6-7	5-0	5-2	4-8	4-2	3-11	3-3	3-2
	1-#5	40,000	6-3	6-8	5-1	5-3	4-9	4-3	4-0	3-3	3-2
		60,000	7-6	8-0	6-1	6-4	5-8	5-1	4-9	3-8	3-6
	2-#4 1-#6	40,000	7-0	7-6	5-8	5-11	5-3	4-9	4-5	3-8	3-6
		60,000	DR	DR	DR	DR	DR	DR	DR	DR	DR
	Center distance $A^{k, l}$		1-7	1-10	1-1	1-2	0-11	0-9	0-8	0-5	0-5
12	Span without stirrups[i, j]		4-2	4-8	3-5	3-6	3-2	2-11	2-9	2-5	2-4
	1-#4	40,000	5-7	6-1	4-8	4-10	4-4	3-11	3-8	3-0	2-11
		60,000	7-9	8-6	6-6	6-9	6-1	5-6	5-1	4-3	4-1
	1-#5	40,000	7-11	8-8	6-8	6-11	6-2	5-7	5-2	4-4	4-2
		60,000	9-7	10-6	8-0	8-4	7-6	6-9	6-3	5-2	5-1
	2-#4 1-#6	40,000	8-11	9-9	7-6	7-9	6-11	6-3	5-10	4-10	4-8
		60,000	10-8	11-9	8-12	9-4	8-4	7-6	7-0	5-10	5-8
	2-#5	40,000	10-11	12-0	9-2	9-6	8-6	7-8	7-2	5-6	5-3
		60,000	12-11	14-3	10-10	11-3	10-1	9-0	8-1	6-1	5-10
	2-#6	40,000	12-9	14-0	10-8	11-1	9-7	8-1	7-3	5-6	5-3
		60,000	DR	DR	DR	DR	DR	DR	DR	DR	DR
	Center distance $A^{k, l}$		2-6	3-0	1-9	1-10	1-6	1-3	1-1	0-9	0-8
16	Span without stirrups[i, j]		5-7	6-5	4-9	4-11	4-5	4-0	3-10	3-4	3-4
	1-#4	40,000	6-5	7-2	5-6	5-9	5-2	4-8	4-4	3-7	3-6
		60,000	7-10	8-9	6-9	7-0	6-3	5-8	5-3	4-4	4-3
	1-#5	40,000	7-11	8-11	6-10	7-1	6-5	5-9	5-4	4-5	4-4
		60,000	11-1	12-6	9-7	9-11	8-11	8-0	7-6	6-2	6-0
	2-#4 1-#6	40,000	10-3	11-7	8-10	9-2	8-3	7-6	6-11	5-9	5-7
		60,000	12-5	14-0	10-9	11-1	10-0	9-0	8-5	7-0	6-9
	2-#5	40,000	12-8	14-3	10-11	11-4	10-2	9-2	8-7	6-9	6-6
		60,000	15-2	17-1	13-1	13-7	12-3	11-0	10-3	7-11	7-7
	2-#6	40,000	14-11	16-9	12-8	13-4	11-4	9-8	8-8	6-9	6-6
		60,000	DR	DR	DR	DR	DR	DR	DR	DR	DR
	Center distance $A^{k, l}$		3-3	4-1	2-5	2-7	2-1	1-9	1-6	1-0	1-0

(continued)

TABLE R608.8(3)—continued
MAXIMUM ALLOWABLE CLEAR SPANS FOR 6-INCH-NOMINAL THICK FLAT LINTELS IN LOAD-BEARING WALLS[a, b, c, d, e, f, m]
ROOF CLEAR SPAN 40 FEET AND FLOOR CLEAR SPAN 32 FEET

LINTEL DEPTH, D[g] (Inches)	NUMBER OF BARS AND BAR SIZE IN TOP AND BOTTOM OF LINTEL	STEEL YIELD STRENGTH[h], f_y (psi)	DESIGN LOADING CONDITION DETERMINED FROM TABLE R608.8(1)								
			1	2		3		4		5	
			Maximum ground snow load (psf)								
			—	30	70	30	70	30	70	30	70
			Maximum clear span of lintel (feet - inches)								
20	Span without stirrups[i, j]		6-11	8-2	6-1	6-3	5-8	5-2	4-11	4-4	4-3
	1-#5	40,000	8-9	10-1	7-9	8-0	7-3	6-6	6-1	5-1	4-11
		60,000	10-8	12-3	9-5	9-9	8-10	8-0	7-5	6-2	6-0
	2-#4 1-#6	40,000	9-11	11-4	8-9	9-1	8-2	7-4	6-10	5-8	5-7
		60,000	13-9	15-10	12-2	12-8	11-5	10-3	9-7	7-11	7-9
	2-#5	40,000	14-0	16-2	12-5	12-11	11-7	10-6	9-9	7-11	7-8
		60,000	16-11	19-6	15-0	15-6	14-0	12-7	11-9	9-1	8-9
	2-#6	40,000	16-7	19-1	14-7	15-3	13-1	11-3	10-2	7-11	7-8
		60,000	19-11	22-10	17-4	18-3	15-6	13-2	11-10	9-1	8-9
	Center distance A[k, l]		3-11	5-2	3-1	3-3	2-8	2-2	1-11	1-4	1-3
24	Span without stirrups[i, j]		8-2	9-10	7-4	7-8	6-11	6-4	5-11	5-3	5-2
	1-#5	40,000	9-5	11-1	8-7	8-10	8-0	7-3	6-9	5-7	5-5
		60,000	11-6	13-6	10-5	10-9	9-9	8-9	8-2	6-10	6-8
	2-#4 1-#6	40,000	10-8	12-6	9-8	10-0	9-0	8-2	7-7	6-4	6-2
		60,000	12-11	15-2	11-9	12-2	11-0	9-11	9-3	7-8	7-6
	2-#5	40,000	15-2	17-9	13-9	14-3	12-10	11-7	10-10	9-0	8-9
		60,000	18-4	21-6	16-7	17-3	15-6	14-0	13-1	10-4	10-0
	2-#6	40,000	18-0	21-1	16-4	16-11	14-10	12-9	11-8	9-2	8-11
		60,000	21-7	25-4	19-2	20-4	17-2	14-9	13-4	10-4	10-0
	Center distance A[k, l]		4-6	6-2	3-8	4-0	3-3	2-8	2-3	1-7	1-6

For SI: 1 inch = 25.4 mm, 1 foot = 304.8 mm, 1 pound per square inch = 6.895 kPa, 1 pound per square foot = 0.0479 kPa, Grade 40 = 280 MPa, Grade 60 = 420 MPa.

a. See Table R608.3 for tolerances permitted from nominal thickness.

b. Table values are based on concrete with a minimum specified compressive strength of 2,500 psi. See Note j.

c. Table values are based on uniform loading. See Section R608.8.2 for lintels supporting concentrated loads.

d. Deflection criterion is $L/240$, where L is the clear span of the lintel in inches, or $^1/_2$ inch, whichever is less.

e. Linear interpolation is permitted between ground snow loads and between lintel depths.

f. DR indicates design required.

g. Lintel depth, D, is permitted to include the available height of wall located directly above the lintel, provided that the increased lintel depth spans the entire length of the lintel.

h. Stirrups shall be fabricated from reinforcing bars with the same yield strength as that used for the main longitudinal reinforcement.

i. Allowable clear span without stirrups applicable to all lintels of the same depth, D. Top and bottom reinforcement for lintels without stirrups shall be not less than the least amount of reinforcement required for a lintel of the same depth and loading condition with stirrups. All other spans require stirrups spaced at not more than $d/2$.

j. Where concrete with a minimum specified compressive strength of 3,000 psi is used, clear spans for lintels without stirrups shall be permitted to be multiplied by 1.05. If the increased span exceeds the allowable clear span for a lintel of the same depth and loading condition with stirrups, the top and bottom reinforcement shall be equal to or greater than that required for a lintel of the same depth and loading condition that has an allowable clear span that is equal to or greater than that of the lintel without stirrups that has been increased.

k. Center distance, A, is the center portion of the clear span where stirrups are not required. This is applicable to all longitudinal bar sizes and steel yield strengths.

l. Where concrete with a minimum specified compressive strength of 3,000 psi is used, center distance, A, shall be permitted to be multiplied by 1.10.

m. The maximum clear opening width between two solid wall segments shall be 18 feet. See Section R608.7.2.1. Lintel clear spans in the table greater than 18 feet are shown for interpolation and information only.

TABLE R608.8(4)
MAXIMUM ALLOWABLE CLEAR SPANS FOR 8-INCH-NOMINAL THICK FLAT LINTELS IN LOAD-BEARING WALLS[a, b, c, d, e, f, m]
ROOF CLEAR SPAN 40 FEET AND FLOOR CLEAR SPAN 32 FEET

LINTEL DEPTH, D[g] (Inches)	NUMBER OF BARS AND BAR SIZE IN TOP AND BOTTOM OF LINTEL	STEEL YIELD STRENGTH[h], f_y (psi)	DESIGN LOADING CONDITION DETERMINED FROM TABLE R608.8(1)								
			1	2		3		4		5	
			Maximum ground snow load (psf)								
			—	30	70	30	70	30	70	30	70
			Maximum clear span of lintel (feet - inches)								
8	Span without stirrups[i, j]		4-4	4-9	3-7	3-9	3-4	2-10	2-7	2-1	2-0
	1-#4	40,000	4-4	4-9	3-7	3-9	3-4	2-11	2-9	2-3	2-2
		60,000	6-1	6-7	5-0	5-3	4-8	4-0	3-9	3-1	3-0
	1-#5	40,000	6-2	6-9	5-2	5-4	4-9	4-1	3-10	3-2	3-1
		60,000	7-5	8-1	6-2	6-5	5-9	4-11	4-7	3-9	3-8
	2-#4 1-#6	40,000	6-11	7-6	5-9	6-0	5-4	4-7	4-4	3-6	3-5
		60,000	8-3	9-0	6-11	7-2	6-5	5-6	5-2	4-2	4-1
	2-#5	40,000	8-5	9-2	7-0	7-3	6-6	5-7	5-3	4-2	4-0
		60,000	DR	DR	DR	DR	DR	DR	DR	DR	DR
	Center distance A[k, l]		2-1	2-6	1-5	1-6	1-3	0-11	0-10	0-6	0-6
12	Span without stirrups[i, j]		4-10	5-8	4-0	4-2	3-9	3-2	3-0	2-7	2-6
	1-#4	40,000	5-5	6-1	4-8	4-10	4-4	3-9	3-6	2-10	2-10
		60,000	6-7	7-5	5-8	5-11	5-4	4-7	4-3	3-6	3-5
	1-#5	40,000	6-9	7-7	5-9	6-0	5-5	4-8	4-4	3-7	3-6
		60,000	9-4	10-6	8-1	8-4	7-6	6-6	6-1	5-0	4-10
	2-#4 1-#6	40,000	8-8	9-9	7-6	7-9	7-0	6-0	5-8	4-7	4-6
		60,000	10-6	11-9	9-1	9-5	8-5	7-3	6-10	5-7	5-5
	2-#5	40,000	10-8	12-0	9-3	9-7	8-7	7-5	6-11	5-6	5-4
		60,000	12-10	14-5	11-1	11-6	10-4	8-11	8-4	6-7	6-4
	2-#6	40,000	12-7	14-2	10-10	11-3	10-2	8-3	7-6	5-6	5-4
		60,000	DR	DR	DR	DR	DR	DR	DR	DR	DR
	Center distance A[k, l]		3-2	4-0	2-4	2-6	2-0	1-6	1-4	0-11	0-10
16	Span without stirrups[i, j]		6-5	7-9	5-7	5-10	5-2	4-5	4-2	3-7	3-6
	1-#4	40,000	6-2	7-1	5-6	5-8	5-1	4-5	4-2	3-5	3-4
		60,000	7-6	8-8	6-8	6-11	6-3	5-5	5-1	4-2	4-0
	1-#5	40,000	7-8	8-10	6-10	7-1	6-4	5-6	5-2	4-3	4-1
		60,000	9-4	10-9	8-4	8-7	7-9	6-8	6-3	5-2	5-0
	2-#4 1-#6	40,000	8-8	10-0	7-8	8-0	7-2	6-2	5-10	4-9	4-8
		60,000	12-0	13-11	10-9	11-2	10-0	8-8	8-1	6-8	6-6
	2-#5	40,000	12-3	14-2	11-0	11-4	10-3	8-10	8-3	6-9	6-7
		60,000	14-10	17-2	13-3	13-8	12-4	10-8	10-0	7-11	7-8
	2-#6	40,000	14-6	16-10	13-0	13-5	12-1	10-1	9-2	6-11	6-8
		60,000	17-5	20-2	15-7	16-1	14-6	11-10	10-8	7-11	7-8
	Center distance A[k, l]		4-1	5-5	3-3	3-6	2-10	2-1	1-10	1-3	1-2

(continued)

TABLE R608.8(4)—continued
MAXIMUM ALLOWABLE CLEAR SPANS FOR 8-INCH-NOMINAL THICK FLAT LINTELS IN LOAD-BEARING WALLS[a, b, c, d, e, f, m]
ROOF CLEAR SPAN 40 FEET AND FLOOR CLEAR SPAN 32 FEET

LINTEL DEPTH, D[g] (Inches)	NUMBER OF BARS AND BAR SIZE IN TOP AND BOTTOM OF LINTEL	STEEL YIELD STRENGTH[h], f_y (psi)	DESIGN LOADING CONDITION DETERMINED FROM TABLE R608.8(1)								
			1	2		3		4		5	
			Maximum ground snow load (psf)								
			—	30	70	30	70	30	70	30	70
			Maximum clear span of lintel (feet - inches)								
20	Span without stirrups[i, j]		7-10	9-10	7-1	7-5	6-7	5-8	5-4	4-7	4-6
	1-#5	40,000	8-4	9-11	7-8	8-0	7-2	6-3	5-10	4-9	4-8
		60,000	10-2	12-1	9-5	9-9	8-9	7-7	7-1	5-10	5-8
	2-#4 1-#6	40,000	9-5	11-3	8-8	9-0	8-1	7-0	6-7	5-5	5-3
		60,000	11-6	13-8	10-7	11-0	9-11	8-7	8-0	6-7	6-5
	2-#5	40,000	11-9	13-11	10-10	11-2	10-1	8-9	8-2	6-8	6-7
		60,000	16-4	19-5	15-0	15-7	14-0	12-2	11-4	9-3	9-0
	2-#6	40,000	16-0	19-0	14-9	15-3	13-9	11-10	10-10	8-3	8-0
		60,000	19-3	22-11	17-9	18-5	16-7	13-7	12-4	9-3	9-0
	Center distance A[k, l]		4-10	6-10	4-1	4-5	3-7	2-8	2-4	1-7	1-6
24	Span without stirrups[i, j]		9-2	11-9	8-7	8-11	8-0	6-11	6-6	5-7	5-6
	1-#5	40,000	8-11	10-10	8-6	8-9	7-11	6-10	6-5	5-3	5-2
		60,000	10-11	13-3	10-4	10-8	9-8	8-4	7-10	6-5	6-3
	2-#4 1-#6	40,000	10-1	12-3	9-7	9-11	8-11	7-9	7-3	6-0	5-10
		60,000	12-3	15-0	11-8	12-1	10-11	9-5	8-10	7-3	7-1
	2-#5	40,000	12-6	15-3	11-11	12-4	11-1	9-7	9-0	7-5	7-3
		60,000	17-6	21-3	16-7	17-2	15-6	13-5	12-7	10-4	10-1
	2-#6	40,000	17-2	20-11	16-3	16-10	15-3	13-2	12-4	9-7	9-4
		60,000	20-9	25-3	19-8	20-4	18-5	15-4	14-0	10-7	10-3
	Center distance A[k, l]		5-6	8-1	4-11	5-3	4-4	3-3	2-10	1-11	1-10

For SI: 1 inch = 25.4 mm, 1 foot = 304.8 mm, 1 pound per square inch = 6.895 kPa, 1 pound per square foot = 0.0479 kPa, Grade 40 = 280 MPa; Grade 60 = 420 MPa.

Note: Top and bottom reinforcement for lintels without stirrups, as shown in shaded cells, shall be equal to or greater than that required for lintel of the same depth and loading condition that has an allowable clear span that is equal to or greater than that of the lintel without stirrups.

a. See Table R608.3 for tolerances permitted from nominal thickness.
b. Table values are based on concrete with a minimum specified compressive strength of 2,500 psi. See Note j.
c. Table values are based on uniform loading. See Section R608.8.2 for lintels supporting concentrated loads.
d. Deflection criterion is $L/240$, where L is the clear span of the lintel in inches, or $^1/_2$ inch, whichever is less.
e. Linear interpolation is permitted between ground snow loads and between lintel depths.
f. DR indicates design required.
g. Lintel depth, D, is permitted to include the available height of wall located directly above the lintel, provided that the increased lintel depth spans the entire length of the lintel.
h. Stirrups shall be fabricated from reinforcing bars with the same yield strength as that used for the main longitudinal reinforcement.
i. Allowable clear span without stirrups applicable to all lintels of the same depth, D. Top and bottom reinforcement for lintels without stirrups shall be not less than the least amount of reinforcement required for a lintel of the same depth and loading condition with stirrups. All other spans require stirrups spaced at not more than $d/2$.
j. Where concrete with a minimum specified compressive strength of 3,000 psi is used, clear spans for lintels without stirrups shall be permitted to be multiplied by 1.05. If the increased span exceeds the allowable clear span for a lintel of the same depth and loading condition with stirrups, the top and bottom reinforcement shall be equal to or greater than that required for a lintel of the same depth and loading condition that has an allowable clear span that is equal to or greater than that of the lintel without stirrups that has been increased.
k. Center distance, A, is the center portion of the clear span where stirrups are not required. This is applicable to all longitudinal bar sizes and steel yield strengths.
l. Where concrete with a minimum specified compressive strength of 3,000 psi is used, center distance, A, shall be permitted to be multiplied by 1.10.
m. The maximum clear opening width between two solid wall segments shall be 18 feet. See Section R608.7.2.1. Lintel clear spans in the table greater than 18 feet are shown for interpolation and information only.

TABLE R608.8(5)
MAXIMUM ALLOWABLE CLEAR SPANS FOR 10-INCH-NOMINAL THICK FLAT LINTELS IN LOAD-BEARING WALLS[a, b, c, d, e, f, m]
ROOF CLEAR SPAN 40 FEET AND FLOOR CLEAR SPAN 32 FEET

LINTEL DEPTH, D[g] (Inches)	NUMBER OF BARS AND BAR SIZE IN TOP AND BOTTOM OF LINTEL	STEEL YIELD STRENGTH[h], f_y (psi)	DESIGN LOADING CONDITION DETERMINED FROM TABLE R608.8(1)								
			1	2		3		4		5	
			Maximum ground snow load (psf)								
			—	30	70	30	70	30	70	30	70
			Maximum clear span of llntel (feet - inches)								
8	Span without stirrups[i, j]		6-0	7-2	4-7	4-10	4-1	3-1	2-11	2-3	2-2
	1-#4	40,000	4-3	4-9	3-7	3-9	3-4	2-9	2-7	2-1	2-1
		60,000	5-11	6-7	5-0	5-3	4-8	3-10	3-8	2-11	2-11
	1-#5	40,000	6-1	6-9	5-2	5-4	4-9	3-11	3-9	3-0	2-11
		60,000	7-4	8-1	6-3	6-5	5-9	4-9	4-6	3-7	3-7
	2-#4 1-#6	40,000	6-10	7-6	5-9	6-0	5-5	4-5	4-2	3-4	3-4
		60,000	8-2	9-1	6-11	7-2	6-6	5-4	5-0	4-1	4-0
	2-#5	40,000	8-4	9-3	7-1	7-4	6-7	5-5	5-1	4-1	4-0
		60,000	9-11	11-0	8-5	8-9	7-10	6-6	6-1	4-8	4-6
	2-#6	40,000	9-9	10-10	8-3	8-7	7-9	6-4	5-10	4-1	4-0
		60,000	DR	DR	DR	DR	DR	DR	DR	DR	DR
	Center distance $A^{k, l}$		2-6	3-1	1-10	1-11	1-7	1-1	0-11	0-7	0-7
12	Span without stirrups[i, j]		5-5	6-7	4-7	4-10	4-3	3-5	3-3	2-8	2-8
	1-#4	40,000	5-3	6-0	4-8	4-10	4-4	3-7	3-4	2-9	2-8
		60,000	6-5	7-4	5-8	5-10	5-3	4-4	4-1	3-4	3-3
	1-#5	40,000	6-6	7-6	5-9	6-0	5-5	4-5	4-2	3-5	3-4
		60,000	7-11	9-1	7-0	7-3	6-7	5-5	5-1	4-2	4-0
	2-#4 1-#6	40,000	7-4	8-5	6-6	6-9	6-1	5-0	4-9	3-10	3-9
		60,000	10-3	11-9	9-1	9-5	8-6	7-0	6-7	5-4	5-3
	2-#5	40,000	10-5	12-0	9-3	9-7	8-8	7-2	6-9	5-5	5-4
		60,000	12-7	14-5	11-2	11-6	10-5	8-7	8-1	6-6	6-4
	2-#6	40,000	12-4	14-2	10-11	11-4	10-2	8-5	7-8	5-7	5-5
		60,000	14-9	17-0	13-1	13-6	12-2	10-0	9-1	6-6	6-4
	Center distance $A^{k, l}$		3-9	4-11	2-11	3-2	2-7	1-9	1-7	1-0	1-0
16	Span without stirrups[i, j]		7-1	9-0	6-4	6-8	5-10	4-9	4-6	3-9	3-8
	1-#4	40,000	5-11	7-0	5-5	5-8	5-1	4-3	4-0	3-3	3-2
		60,000	7-3	8-7	6-8	6-11	6-3	5-2	4-10	3-11	3-10
	1-#5	40,000	7-4	8-9	6-9	7-0	6-4	5-3	4-11	4-0	3-11
		60,000	9-0	10-8	8-3	8-7	7-9	6-5	6-0	4-11	4-9
	2-#4 1-#6	40,000	8-4	9-11	7-8	7-11	7-2	5-11	5-7	4-6	4-5
		60,000	10-2	12-0	9-4	9-8	8-9	7-3	6-10	5-6	5-5
	2-#5	40,000	10-4	12-3	9-6	9-10	8-11	7-4	6-11	5-8	5-6
		60,000	14-4	17-1	13-3	13-8	12-4	10-3	9-8	7-10	7-8
	2-#6	40,000	14-1	16-9	13-0	13-5	12-2	10-1	9-6	7-0	6-10
		60,000	17-0	20-2	15-8	16-2	14-7	12-0	10-11	8-0	7-9
	Center distance $A^{k, l}$		4-9	6-8	4-0	4-4	3-6	2-5	2-2	1-5	1-4

(continued)

TABLE R608.8(5)—continued
MAXIMUM ALLOWABLE CLEAR SPANS FOR 10-INCH-NOMINAL THICK FLAT LINTELS IN LOAD-BEARING WALLS[a, b, c, d, e, f, m]
ROOF CLEAR SPAN 40 FEET AND FLOOR CLEAR SPAN 32 FEET

LINTEL DEPTH, D[g] (Inches)	NUMBER OF BARS AND BAR SIZE IN TOP AND BOTTOM OF LINTEL	STEEL YIELD STRENGTH[h], f_y (psi)	DESIGN LOADING CONDITION DETERMINED FROM TABLE R608.8(1)								
			1	2		3		4		5	
			Maximum ground snow load (psf)								
			—	30	70	30	70	30	70	30	70
			Maximum clear span of lintel (feet - inches)								
20	Span without stirrups[i, j]		8-7	11-4	8-1	8-5	7-5	6-1	5-9	4-10	4-9
	1-#4	40,000	6-5	7-10	6-2	6-4	5-9	4-9	4-6	3-8	3-7
		60,000	7-10	9-7	7-6	7-9	7-0	5-10	5-6	4-5	4-4
	1-#5	40,000	8-0	9-9	7-8	7-11	7-2	5-11	5-7	4-6	4-5
		60,000	9-9	11-11	9-4	9-8	8-9	7-3	6-10	5-6	5-5
	2-#4 1-#6	40,000	9-0	11-1	8-8	8-11	8-1	6-9	6-4	5-2	5-0
		60,000	11-0	13-6	10-6	10-11	9-10	8-2	7-9	6-3	6-2
	2-#5	40,000	11-3	13-9	10-9	11-1	10-0	8-4	7-10	6-5	6-3
		60,000	15-8	19-2	15-0	15-6	14-0	11-8	11-0	8-11	8-9
	2-#6	40,000	15-5	18-10	14-8	15-2	13-9	11-5	10-9	8-6	8-3
		60,000	18-7	22-9	17-9	18-5	16-7	13-10	12-9	9-5	9-2
	Center distance A[k, l]		5-7	8-4	5-1	5-5	4-5	3-1	2-9	1-10	1-9
24	Span without stirrups[i, j]		9-11	13-7	9-9	10-2	9-0	7-5	7-0	5-10	5-9
	1-#5	40,000	8-6	10-8	8-5	8-8	7-10	6-6	6-2	5-0	4-11
		60,000	10-5	13-0	10-3	10-7	9-7	8-0	7-6	6-1	6-0
	2-#4 1-#6	40,000	9-7	12-1	9-6	9-9	8-10	7-5	7-0	5-8	5-6
		60,000	11-9	14-9	11-7	11-11	10-10	9-0	8-6	6-11	6-9
	2-#5	40,000	12-0	15-0	11-9	12-2	11-0	9-2	8-8	7-1	6-11
		60,000	14-7	18-3	14-4	14-10	13-5	11-2	10-7	8-7	8-5
	2-#6	40,000	14-3	17-11	14-1	14-7	13-2	11-0	10-4	8-5	8-3
		60,000	19-11	25-0	19-7	20-3	18-4	15-3	14-5	10-10	10-7
	Center distance A[k, l]		6-3	9-11	6-1	6-6	5-4	3-9	3-4	2-2	2-1

For SI: 1 inch = 25.4 mm, 1 foot = 304.8 mm, 1 pound per square inch = 6.895 kPa, 1 pound per square foot = 0.0479 kPa, Grade 40 = 280 MPa, Grade 60 = 420 MPa.

Note: Top and bottom reinforcement for lintels without stirrups, as shown in shaded cells, shall be equal to or greater than that required for lintel of the same depth and loading condition that has an allowable clear span that is equal to or greater than that of the lintel without stirrups.

a. See Table R608.3 for tolerances permitted from nominal thickness.

b. Table values are based on concrete with a minimum specified compressive strength of 2,500 psi. See Note j.

c. Table values are based on uniform loading. See Section R608.8.2 for lintels supporting concentrated loads.

d. Deflection criterion is $L/240$, where L is the clear span of the lintel in inches, or $^1/_2$ inch, whichever is less.

e. Linear interpolation is permitted between ground snow loads and between lintel depths.

f. DR indicates design required.

g. Lintel depth, D, is permitted to include the available height of wall located directly above the lintel, provided that the increased lintel depth spans the entire length of the lintel.

h. Stirrups shall be fabricated from reinforcing bars with the same yield strength as that used for the main longitudinal reinforcement.

i. Allowable clear span without stirrups applicable to all lintels of the same depth, D. Top and bottom reinforcement for lintels without stirrups shall be not less than the least amount of reinforcement required for a lintel of the same depth and loading condition with stirrups. All other spans require stirrups spaced at not more than $d/2$.

j. Where concrete with a minimum specified compressive strength of 3,000 psi is used, clear spans for lintels without stirrups shall be permitted to be multiplied by 1.05. If the increased span exceeds the allowable clear span for a lintel of the same depth and loading condition with stirrups, the top and bottom reinforcement shall be equal to or greater than that required for a lintel of the same depth and loading condition that has an allowable clear span that is equal to or greater than that of the lintel without stirrups that has been increased.

k. Center distance, A, is the center portion of the clear span where stirrups are not required. This is applicable to all longitudinal bar sizes and steel yield strengths.

l. Where concrete with a minimum specified compressive strength of 3,000 psi is used, center distance, A, shall be permitted to be multiplied by 1.10.

m. The maximum clear opening width between two solid wall segments shall be 18 feet. See Section R608.7.2.1. Lintel clear spans in the table greater than 18 feet are shown for interpolation and information only.

TABLE R608.8(6)
MAXIMUM ALLOWABLE CLEAR SPANS FOR 6-INCH-THICK WAFFLE-GRID LINTELS IN LOAD-BEARING WALLS[a, b, c, d, e, f, o]
MAXIMUM ROOF CLEAR SPAN 40 FEET AND MAXIMUM FLOOR SPAN 32 FEET

LINTEL DEPTH, D[g] (Inches)	NUMBER OF BARS AND BAR SIZE IN TOP AND BOTTOM OF LINTEL	STEEL YIELD STRENGTH[h], f_y (psi)	DESIGN LOADING CONDITION DETERMINED FROM TABLE R608.8(1)								
			1	2		3		4		5	
			Maximum ground snow load (psf)								
			—	30	70	30	70	30	70	30	70
			Maximum clear span of lintel (feet - Inches)								
8[i]	Span without stirrups[k, l]		2-7	2-9	2-0	2-1	2-0	2-0	2-0	2-0	2-0
	1-#4	40,000	5-2	5-5	4-0	4-3	3-7	3-3	2-11	2-4	2-3
		60,000	5-9	6-3	4-0	4-3	3-7	3-3	2-11	2-4	2-3
	1-#5	40,000	5-9	6-3	4-0	4-3	3-7	3-3	2-11	2-4	2-3
		60,000	5-9	6-3	4-0	4-3	3-7	3-3	2-11	2-4	2-3
	2-#4 1-#6	40,000	5-9	6-3	4-0	4-3	3-7	3-3	2-11	2-4	2-3
		60,000	DR	DR	DR	DR	DR	DR	DR	DR	DR
	Center distance $A^{m, n}$		0-9	0-10	0-6	0-6	0-5	0-5	0-4	STL	STL
12[i]	Span without stirrups[k, l]		2-11	3-1	2-6	2-7	2-5	2-4	2-3	2-1	2-0
	1-#4	40,000	5-9	6-2	4-8	4-10	4-4	4-1	3-9	3-2	3-1
		60,000	8-0	8-7	6-6	6-9	6-0	5-5	4-11	3-11	3-10
	1-#5	40,000	8-1	8-9	6-8	6-11	6-0	5-5	4-11	3-11	3-10
		60,000	9-1	10-3	6-8	7-0	6-0	5-5	4-11	3-11	3-10
	2-#4 1-#6	40,000	9-1	9-9	6-8	7-0	6-0	5-5	4-11	3-11	3-10
	Center distance $A^{m, n}$		1-3	1-5	0-10	0-11	0-9	0-8	0-6	STL	STL
	Span without stirrups[k, l]		4-0	4-4	3-6	3-7	3-4	3-3	3-1	2-10	2-10
16[i]	1-#4	40,000	6-7	7-3	5-6	5-9	5-2	4-10	4-6	3-9	3-8
		60,000	8-0	8-10	6-9	7-0	6-3	5-11	5-5	4-7	4-5
	1-#5	40,000	8-2	9-0	6-11	7-2	6-5	6-0	5-7	4-8	4-6
		60,000	11-5	12-6	9-3	9-9	8-4	7-7	6-10	5-6	5-4
	2-#4 1-#6	40,000	10-7	11-7	8-11	9-3	8-3	7-7	6-10	5-6	5-4
		60,000	12-2	14-0	9-3	9-9	8-4	7-7	6-10	5-6	5-4
	2-#5	40,000	12-2	14-2	9-3	9-9	8-4	7-7	6-10	5-6	5-4
		60,000	DR	DR	DR	DR	DR	DR	DR	DR	DR
	Center distance $A^{m, n}$		1-8	2-0	1-2	1-3	1-0	0-11	0-9	STL	STL
20[i]	Span without stirrups[k, l]		5-0	5-6	4-6	4-7	4-3	4-1	4-0	3-8	3-8
	1-#4	40,000	7-2	8-2	6-3	6-6	5-10	5-6	5-1	4-3	4-2
		60,000	8-11	9-11	7-8	7-11	7-1	6-8	6-2	5-2	5-0
	1-#5	40,000	9-1	10-2	7-9	8-1	7-3	6-10	6-4	5-4	5-2
		60,000	12-8	14-2	10-11	11-3	10-2	9-6	8-9	7-1	6-10
	2-#4 1-#6	40,000	10-3	11-5	8-9	9-1	8-2	7-8	7-1	6-0	5-10
		60,000	14-3	15-11	11-9	12-5	10-8	9-9	8-9	7-1	6-10
	2-#5	40,000	14-6	16-3	11-6	12-1	10-4	9-6	8-6	6-11	6-8
		60,000	DR	DR	DR	DR	DR	DR	DR	DR	DR
	Center distance $A^{m, n}$		2-0	2-6	1-6	1-7	1-3	1-1	1-0	STL	STL

(continued)

TABLE R608.8(6)—continued
MAXIMUM ALLOWABLE CLEAR SPANS FOR 6-INCH-THICK WAFFLE-GRID LINTELS IN LOAD-BEARING WALLS[a, b, c, d, e, f, o]
MAXIMUM ROOF CLEAR SPAN 40 FEET AND MAXIMUM FLOOR SPAN 32 FEET

LINTEL DEPTH, D[g] (Inches)	NUMBER OF BARS AND BAR SIZE IN TOP AND BOTTOM OF LINTEL	STEEL YIELD STRENGTH[h], f_y (psi)	DESIGN LOADING CONDITION DETERMINED FROM TABLE R608.8(1)								
			1	2		3		4		5	
			Maximum ground snow load (psf)								
			—	30	70	30	70	30	70	30	70
			Maximum clear span of lintel (feet - inches)								
24w[j]	Span without stirrups[k, l]		6-0	6-8	5-5	5-7	5-3	5-0	4-10	4-6	4-5
	1-#4	40,000	7-11	9-0	6-11	7-2	6-5	6-0	5-7	4-8	4-7
		60,000	9-8	10-11	8-5	8-9	7-10	7-4	6-10	5-9	5-7
	1-#5	40,000	9-10	11-2	8-7	8-11	8-0	7-6	7-0	5-10	5-8
		60,000	12-0	13-7	10-6	10-10	9-9	9-2	8-6	7-2	6-11
	2-#4 1-#6	40,000	11-1	12-7	9-8	10-1	9-1	8-6	7-10	6-7	6-5
		60,000	15-6	17-7	13-6	14-0	12-8	11-10	10-8	8-7	8-4
	2-#5	40,000	15-6	17-11	12-8	13-4	11-6	10-7	9-7	7-10	7-7
		60,000	DR	DR	DR	DR	DR	DR	DR	DR	DR
	Center distance A[m, n]		2-4	3-0	1-9	1-11	1-6	1-4	1-2	STL	STL

For SI: 1 inch = 25.4 mm, 1 foot = 304.8 mm, 1 pound per square inch = 6.895 kPa, 1 pound per square foot = 0.0479 kPa, Grade 40 = 280 MPa, Grade 60 = 420 MPa.

a. Where lintels are formed with waffle-grid forms, form material shall be removed, if necessary, to create top and bottom flanges of the lintel that are not less than 3 inches in depth (in the vertical direction), are not less than 5 inches in width for 6-inch-nominal waffle-grid forms and not less than 7 inches in width for 8-inch-nominal waffle-grid forms. See Figure R608.8(3). Flat form lintels shall be permitted in place of waffle-grid lintels. See Tables R608.8(2) through R608.8(5).

b. See Table R608.3 for tolerances permitted from nominal thicknesses and minimum dimensions and spacing of cores.

c. Table values are based on concrete with a minimum specified compressive strength of 2,500 psi. See Notes l and n. Table values are based on uniform loading. See Section R608.8.2 for lintels supporting concentrated loads.

d. Deflection criterion is $L/240$, where L is the clear span of the lintel in inches, or $^1/_2$ inch, whichever is less.

e. Linear interpolation is permitted between ground snow loads.

f. DR indicates design required. STL indicates stirrups required throughout lintel.

g. Lintel depth, D, is permitted to include the available height of wall located directly above the lintel, provided that the increased lintel depth spans the entire length of the lintel.

h. Stirrups shall be fabricated from reinforcing bars with the same yield strength as that used for the main longitudinal reinforcement.

i. Lintels less than 24 inches in depth with stirrups shall be formed from flat-wall forms [see Tables R608.8(2) through R608.8(5)], or, if necessary, form material shall be removed from waffle-grid forms so as to provide the required cover for stirrups. Allowable spans for lintels formed with flat-wall forms shall be determined from Tables R608.8(2) through R608.8(5).

j. Where stirrups are required for 24-inch-deep lintels, the spacing shall not exceed 12 inches on center.

k. Allowable clear span without stirrups applicable to all lintels of the same depth, D. Top and bottom reinforcement for lintels without stirrups shall be not less than the least amount of reinforcement required for a lintel of the same depth and loading condition with stirrups. All other spans require stirrups spaced at not more than $d/2$.

l. Where concrete with a minimum specified compressive strength of 3,000 psi is used, clear spans for lintels without stirrups shall be permitted to be multiplied by 1.05. If the increased span exceeds the allowable clear span for a lintel of the same depth and loading condition with stirrups, the top and bottom reinforcement shall be equal to or greater than that required for a lintel of the same depth and loading condition that has an allowable clear span that is equal to or greater than that of the lintel without stirrups that has been increased.

m. Center distance, A, is the center portion of the span where stirrups are not required. This is applicable to all longitudinal bar sizes and steel yield strengths.

n. Where concrete with a minimum specified compressive strength of 3,000 psi is used, center distance, A, shall be permitted to be multiplied by 1.10.

o. The maximum clear opening width between two solid wall segments shall be 18 feet. See Section R608.7.2.1. Lintel spans in the table greater than 18 feet are shown for interpolation and information only.

TABLE R608.8(7)
MAXIMUM ALLOWABLE CLEAR SPANS FOR 8-INCH-THICK WAFFLE-GRID LINTELS IN LOAD-BEARING WALLS[a, b, c, d, e, f, o]
MAXIMUM ROOF CLEAR SPAN 40 FEET AND MAXIMUM FLOOR CLEAR SPAN 32 FEET

LINTEL DEPTH, D[g] (inches)	NUMBER OF BARS AND BAR SIZE IN TOP AND BOTTOM OF LINTEL	STEEL YIELD STRENGTH[h], f_y (psi)	DESIGN LOADING CONDITION DETERMINED FROM TABLE R608.8(1)								
			1	2		3		4		5	
			Maximum ground snow load (psf)								
			—	30	70	30	70	30	70	30	70
			Maximum clear span of lintel (feet - inches)								
8[i]	Span without stirrups[k, l]		2-6	2-9	2-0	2-1	2-0	2-0	2-0	2-0	2-0
	1-#4	40,000	4-5	4-9	3-7	3-9	3-4	3-0	2-10	2-3	2-2
		60,000	5-6	6-2	4-0	4-3	3-7	3-1	2-10	2-3	2-2
	1-#5	40,000	5-6	6-2	4-0	4-3	3-7	3-1	2-10	2-3	2-2
	Center distance A[m, n]		0-9	0-10	0-6	0-6	0-5	0-4	0-4	STL	STL
12[i]	Span without stirrups[k, l]		2-10	3-1	2-6	2-7	2-5	2-3	2-2	2-0	2-0
	1-#4	40,000	5-7	6-1	4-8	4-10	4-4	3-11	3-8	3-0	2-11
		60,000	6-9	7-5	5-8	5-11	5-4	4-9	4-5	3-8	3-7
	1-#5	40,000	6-11	7-7	5-10	6-0	5-5	4-10	4-6	3-9	3-7
		60,000	8-8	10-1	6-7	7-0	5-11	5-2	4-8	3-9	3-7
	2-#4 1-#6	40,000	8-8	9-10	6-7	7-0	5-11	5-2	4-8	3-9	3-7
		60,000	8-8	10-1	6-7	7-0	5-11	5-2	4-8	3-9	3-7
	Center distance A[m, n]		1-2	1-5	0-10	0-11	0-9	0-7	0-6	STL	STL
16[i]	Span without stirrups[k, l]		3-10	4-3	3-6	3-7	3-4	3-2	3-0	2-10	2-9
	1-#4	40,000	6-5	7-2	5-6	5-9	5-2	4-8	4-4	3-7	3-6
		60,000	7-9	8-9	6-9	7-0	6-3	5-8	5-3	4-4	4-3
	1-#5	40,000	7-11	8-11	6-10	7-1	6-5	5-9	5-4	4-5	4-4
		60,000	9-8	10-11	8-4	8-8	7-10	7-0	6-6	5-2	5-1
	2-#4 1-#6	40,000	9-0	10-1	7-9	8-0	7-3	6-6	6-1	5-0	4-11
		60,000	11-5	13-10	9-2	9-8	8-3	7-2	6-6	5-2	5-1
	Center distance A[m, n]		1-6	1-11	1-2	1-3	1-0	0-10	0-8	STL	STL
20[i]	Span without stirrups[k, l]		4-10	5-5	4-5	4-7	4-3	4-0	3-11	3-7	3-7
	1-#4	40,000	7-0	8-1	6-3	6-5	5-10	5-3	4-11	4-1	3-11
		60,000	8-7	9-10	7-7	7-10	7-1	6-5	6-0	4-11	4-10
	1-#5	40,000	8-9	10-1	7-9	8-0	7-3	6-6	6-1	5-1	4-11
		60,000	10-8	12-3	9-6	9-10	8-10	8-0	7-5	6-2	6-0
	2-#4 1-#6	40,000	9-10	11-4	8-9	9-1	8-2	7-4	6-10	5-8	5-7
		60,000	12-0	13-10	10-8	11-0	9-11	9-0	8-4	6-8	6-6
	2-#5	40,000	12-3	14-1	10-10	11-3	10-2	8-11	8-1	6-6	6-4
		60,000	14-0	17-6	11-8	12-3	10-6	9-1	8-4	6-8	6-6
	Center distance A[m, n]		1-10	2-5	1-5	1-7	1-3	1-0	0-11	STL	STL

(continued)

TABLE R608.8(7)—continued
MAXIMUM ALLOWABLE CLEAR SPANS FOR 8-INCH-THICK WAFFLE-GRID LINTELS IN LOAD-BEARING WALLS[a, b, c, d, e, f, o]
MAXIMUM ROOF CLEAR SPAN 40 FEET AND MAXIMUM FLOOR CLEAR SPAN 32 FEET

LINTEL DEPTH, D[g] (inches)	NUMBER OF BARS AND BAR SIZE IN TOP AND BOTTOM OF LINTEL	STEEL YIELD STRENGTH[h], f_y (psi)	DESIGN LOADING CONDITION DETERMINED FROM TABLE R608.8(1)								
			1	2		3		4		5	
			Maximum ground snow load (psf)								
			—	30	70	30	70	30	70	30	70
			Maximum clear span of lintel (feet - inches)								
24[j]	Span without stirrups[k, l]		5-9	6-7	5-5	5-6	5-2	4-11	4-9	4-5	4-4
	1-#4	40,000	7-6	8-10	6-10	7-1	6-5	5-9	5-5	4-6	4-4
		60,000	9-2	10-9	8-4	8-8	7-10	7-1	6-7	5-6	5-4
	1-#5	40,000	9-5	11-0	8-6	8-10	8-0	7-2	6-8	5-7	5-5
		60,000	11-5	13-5	10-5	10-9	9-9	8-9	8-2	6-10	6-8
	2-#4 1-#6	40,000	10-7	12-5	9-8	10-0	9-0	8-1	7-7	6-3	6-2
		60,000	12-11	15-2	11-9	12-2	11-0	9-11	9-3	7-8	7-6
	2-#5	40,000	13-2	15-6	12-0	12-5	11-2	9-11	9-2	7-5	7-3
		60,000	16-3	21-0	14-1	14-10	12-9	11-1	10-1	8-1	7-11
	2-#6	40,000	14-4	18-5	12-6	13-2	11-5	9-11	9-2	7-5	7-3
	Center distance A[m, n]		2-1	2-11	1-9	1-10	1-6	1-3	1-1	STL	STL

For SI: 1 inch = 25.4 mm, 1 foot = 304.8 mm, 1 pound per square inch = 6.895 kPa, 1 pound per square foot = 0.0479 kPa, Grade 40 = 280 MPa, Grade 60 = 420 MPa.

a. Where lintels are formed with waffle-grid forms, form material shall be removed, if necessary, to create top and bottom flanges of the lintel that are not less than 3 inches in depth (in the vertical direction), are not less than 5 inches in width for 6-inch-nominal waffle-grid forms and not less than 7 inches in width for 8-inch-nominal waffle-grid forms. See Figure R608.8(3). Flat-form lintels shall be permitted in lieu of waffle-grid lintels. See Tables R608.8(2) through R608.8(5).

b. See Table R608.3 for tolerances permitted from nominal thicknesses and minimum dimensions and spacing of cores.

c. Table values are based on concrete with a minimum specified compressive strength of 2,500 psi. See Notes l and n. Table values are based on uniform loading. See Section R608.8.2 for lintels supporting concentrated loads.

d. Deflection criterion is $L/240$, where L is the clear span of the lintel in inches, or $^1/_2$ inch, whichever is less.

e. Linear interpolation is permitted between ground snow loads.

f. STL indicates stirrups required throughout lintel.

g. Lintel depth, D, is permitted to include the available height of wall located directly above the lintel, provided that the increased lintel depth spans the entire length of the lintel.

h. Stirrups shall be fabricated from reinforcing bars with the same yield strength as that used for the main longitudinal reinforcement.

i. Lintels less than 24 inches in depth with stirrups shall be formed from flat-wall forms [see Tables R608.8(2) through R608.8(5)], or, if necessary, form material shall be removed from waffle-grid forms so as to provide the required cover for stirrups. Allowable spans for lintels formed with flat-wall forms shall be determined from Tables R608.8(2) through R608.8(5).

j. Where stirrups are required for 24-inch-deep lintels, the spacing shall not exceed 12 inches on center.

k. Allowable clear span without stirrups applicable to all lintels of the same depth, D. Top and bottom reinforcement for lintels without stirrups shall be not less than the least amount of reinforcement required for a lintel of the same depth and loading condition with stirrups. All other spans require stirrups spaced at not more than $d/2$.

l. Where concrete with a minimum specified compressive strength of 3,000 psi is used, clear spans for lintels without stirrups shall be permitted to be multiplied by 1.05. If the increased span exceeds the allowable clear span for a lintel of the same depth and loading condition with stirrups, the top and bottom reinforcement shall be equal to or greater than that required for a lintel of the same depth and loading condition that has an allowable clear span that is equal to or greater than that of the lintel without stirrups that has been increased.

m. Center distance, A, is the center portion of the span where stirrups are not required. This is applicable to all longitudinal bar sizes and steel yield strengths.

n. Where concrete with a minimum specified compressive strength of 3,000 psi is used, center distance, A, shall be permitted to be multiplied by 1.10.

o. The maximum clear opening width between two solid wall segments shall be 18 feet. See Section R608.7.2.1. Lintel spans in the table greater than 18 feet are shown for interpolation and information only.

TABLE R608.8(8)
MAXIMUM ALLOWABLE CLEAR SPANS FOR 6-INCH-THICK SCREEN-GRID LINTELS IN LOAD-BEARING WALLS[a, b, c, d, e, f, p]
ROOF CLEAR SPAN 40 FEET AND FLOOR CLEAR SPAN 32 FEET

LINTEL DEPTH, D[g] (inches)	NUMBER OF BARS AND BAR SIZE IN TOP AND BOTTOM OF LINTEL	STEEL YIELD STRENGTH[h], f_y (psi)	DESIGN LOADING CONDITION DETERMINED FROM TABLE R608.8(1)								
			1	2		3		4		5	
			Maximum ground snow load (psf)								
			—	30	70	30	70	30	70	30	70
			Maximum clear span of lintel (feet - inches)								
12[i, j]	Span without stirrups		2-9	2-11	2-4	2-5	2-3	2-3	2-2	2-0	2-0
16[i, j]	Span without stirrups		3-9	4-0	3-4	3-5	3-2	3-1	3-0	2-9	2-9
20[i, j]	Span without stirrups		4-9	5-1	4-3	4-4	4-1	4-0	3-10	3-7	3-7
24[k]	Span without stirrups[l, m]		5-8	6-3	5-2	5-3	5-0	4-10	4-8	4-4	4-4
	1-#4	40,000	7-11	9-0	6-11	7-2	6-5	6-1	5-8	4-9	4-7
		60,000	9-9	11-0	8-5	8-9	7-10	7-5	6-10	5-9	5-7
	1-#5	40,000	9-11	11-2	8-7	8-11	8-0	7-7	7-0	5-11	5-9
		60,000	12-1	13-8	10-6	10-10	9-9	9-3	8-6	7-2	7-0
	2-#4 1-#6	40,000	11-2	12-8	9-9	10-1	9-1	8-7	7-11	6-8	6-6
		60,000	15-7	17-7	12-8	13-4	11-6	10-8	9-8	7-11	7-8
	2-#5	40,000	14-11	18-0	12-2	12-10	11-1	10-3	9-4	7-8	7-5
		60,000	DR	DR	DR	DR	DR	DR	DR	DR	DR
	Center distance A[n, o]		2-0	2-6	1-6	1-7	1-4	1-2	1-0	STL	STL

For SI: 1 inch = 25.4 mm, 1 foot = 304.8 mm, 1 pound per square inch = 6.895 kPa, 1 pound per square foot = 0.0479 kPa, Grade 40 = 280 MPa, Grade 60 = 420 MPa.

a. Where lintels are formed with screen-grid forms, form material shall be removed if necessary to create top and bottom flanges of the lintel that are not less than 5 inches in width and not less than 2.5 inches in depth (in the vertical direction). See Figure R608.8(4). Flat-form lintels shall be permitted in lieu of screen-grid lintels. See Tables R608.8(2) through R608.8(5).

b. See Table R608.3 for tolerances permitted from nominal thickness and minimum dimensions and spacings of cores.

c. Table values are based on concrete with a minimum specified compressive strength of 2,500 psi. See Notes m and o. Table values are based on uniform loading. See Section R608.7.2.1 for lintels supporting concentrated loads.

d. Deflection criterion is $L/240$, where L is the clear span of the lintel in inches, or $^1/_2$ inch, whichever is less.

e. Linear interpolation is permitted between ground snow loads.

f. DR indicates design required. STL indicates stirrups required throughout lintel.

g. Lintel depth, D, is permitted to include the available height of wall located directly above the lintel, provided that the increased lintel depth spans the entire length of the lintel.

h. Stirrups shall be fabricated from reinforcing bars with the same yield strength as that used for the main longitudinal reinforcement.

i. Stirrups are not required for lintels less than 24 inches in depth fabricated from screen-grid forms. Top and bottom reinforcement shall consist of a No. 4 bar having a yield strength of 40,000 psi or 60,000 psi.

j. Lintels between 12 and 24 inches in depth with stirrups shall be formed from flat-wall forms [see Tables R608.8(2) through R608.8(5)], or form material shall be removed from screen-grid forms to provide a concrete section comparable to that required for a flat wall. Allowable spans for flat lintels with stirrups shall be determined from Tables R608.8(2) through R608.8(5).

k. Where stirrups are required for 24-inch-deep lintels, the spacing shall not exceed 12 inches on center.

l. Allowable clear span without stirrups applicable to all lintels of the same depth, D. Top and bottom reinforcement for lintels without stirrups shall be not less than the least amount of reinforcement required for a lintel of the same depth and loading condition with stirrups. All other spans require stirrups spaced at not more than 12 inches.

m. Where concrete with a minimum specified compressive strength of 3,000 psi is used, clear spans for lintels without stirrups shall be permitted to be multiplied by 1.05. If the increased span exceeds the allowable clear span for a lintel of the same depth and loading condition with stirrups, the top and bottom reinforcement shall be equal to or greater than that required for a lintel of the same depth and loading condition that has an allowable clear span that is equal to or greater than that of the lintel without stirrups that has been increased.

n. Center distance, A, is the center portion of the span where stirrups are not required. This is applicable to all longitudinal bar sizes and steel yield strengths.

o. Where concrete with a minimum specified compressive strength of 3,000 psi is used, center distance, A, shall be permitted to be multiplied by 1.10.

p. The maximum clear opening width between two solid wall segments shall be 18 feet. See Section R608.7.2.1. Lintel spans in the table greater than 18 feet are shown for interpolation and information only.

TABLE R608.8(9)
MAXIMUM ALLOWABLE CLEAR SPANS FOR FLAT LINTELS WITHOUT STIRRUPS IN NONLOAD-BEARING WALLS[a, b, c, d, e, g]

LINTEL DEPTH, D^f (Inches)	NUMBER OF BARS AND BAR SIZE	STEEL YIELD STRENGTH, f_y (psi)	NOMINAL WALL THICKNESS (Inches)							
			4		6		8		10	
			Lintel Supporting							
			Concrete Wall	Light-framed Gable	Concrete Wall	Light-framed Gable	Concrete Wall	Light-framed Gable	Concrete Wall	Light-framed Gable
			Maximum Clear Span of Lintel (feet - inches)							
8	1-#4	40,000	10-11	11-5	9-7	11-2	7-10	9-5	7-3	9-2
		60,000	12-5	11-7	10-11	13-5	9-11	13-2	9-3	12-10
	1-#5	40,000	12-7	11-7	11-1	13-8	10-1	13-5	9-4	13-1
		60,000	DR	DR	12-7	16-4	11-6	14-7	10-9	14-6
	2-#4 1-#6	40,000	DR	DR	12-0	15-3	10-11	15-0	10-2	14-8
		60,000	DR	DR	DR	DR	12-2	15-3	11-7	15-3
	2-#5	40,000	DR	DR	DR	DR	12-7	16-7	11-9	16-7
		60,000	DR	DR	DR	DR	DR	DR	13-3	16-7
	2-#6	40,000	DR	DR	DR	DR	DR	DR	13-2	17-8
		60,000	DR	DR	DR	DR	DR	DR	DR	DR
12	1-#4	40,000	11-5	9-10	10-6	12-0	9-6	11-6	8-9	11-1
		60,000	11-5	9-10	11-8	13-3	10-11	14-0	10-1	13-6
	1-#5	40,000	11-5	9-10	11-8	13-3	11-1	14-4	10-3	13-9
		60,000	11-5	9-10	11-8	13-3	11-10	16-0	11-9	16-9
	2-#4 1-#6	40,000	DR	DR	11-8	13-3	11-10	16-0	11-2	15-6
		60,000	DR	DR	11-8	13-3	11-10	16-0	11-11	18-4
	2-#5	40,000	DR	DR	11-8	13-3	11-10	16-0	11-11	18-4
		60,000	DR	DR	11-8	13-3	11-10	16-0	11-11	18-4
16	1-#4	40,000	13-6	13-0	11-10	13-8	10-7	12-11	9-11	12-4
		60,000	13-6	13-0	13-8	16-7	12-4	15-9	11-5	15-0
	1-#5	40,000	13-6	13-0	13-10	17-0	12-6	16-1	11-7	15-4
		60,000	13-6	13-0	13-10	17-1	14-0	19-7	13-4	18-8
	2-#4 1-#6	40,000	13-6	13-0	13-10	17-1	13-8	18-2	12-8	17-4
		60,000	13-6	13-0	13-10	17-1	14-0	20-3	14-1	—
	2-#5	40,000	13-6	13-0	13-10	17-1	14-0	20-3	14-1	—
		60,000	DR	DR	13-10	17-1	14-0	20-3	14-1	—
20	1-#4	40,000	14-11	15-10	13-0	14-10	11-9	13-11	10-10	13-2
		60,000	15-3	15-10	14-11	18-1	13-6	17-0	12-6	16-2
	1-#5	40,000	15-3	15-10	15-2	18-6	13-9	17-5	12-8	16-6
		60,000	15-3	15-10	15-8	20-5	15-9	—	14-7	20-1
	2-#4 1-#6	40,000	15-3	15-10	15-8	20-5	14-11	—	13-10	—
		60,000	15-3	15-10	15-8	20-5	15-10	—	15-11	—
	2-#5	40,000	15-3	15-10	15-8	20-5	15-10	—	15-11	—
		60,000	15-3	15-10	15-8	20-5	15-10	—	15-11	—

(continued)

TABLE R608.8(9)—continued
MAXIMUM ALLOWABLE CLEAR SPANS FOR FLAT LINTELS WITHOUT STIRRUPS IN NONLOAD-BEARING WALLS[a, b, c, d, e, g]

LINTEL DEPTH, D[1] (Inches)	NUMBER OF BARS AND BAR SIZE	STEEL YIELD STRENGTH, f_y (psi)	NOMINAL WALL THICKNESS (inches)							
			4		6		8		10	
			Lintel Supporting							
			Concrete Wall	Light-framed Gable	Concrete Wall	Light-framed Gable	Concrete Wall	Light-framed Gable	Concrete Wall	Light-framed Gable
			Maximum Clear Span of Lintel (feet - inches)							
24	1-#4	40,000	16-1	17-1	13-11	15-10	12-7	14-9	11-8	13-10
		60,000	16-11	18-5	16-1	19-3	14-6	18-0	13-5	17-0
	1-#5	40,000	16-11	18-5	16-3	19-8	14-9	18-5	13-8	17-4
		60,000	16-11	18-5	17-4	—	17-0	—	15-8	—
	2-#4 1-#6	40,000	16-11	18-5	17-4	—	16-1	—	14-10	—
		60,000	16-11	18-5	17-4	—	17-6	—	17-1	—
	2-#5	40,000	16-11	18-5	17-4	—	17-6	—	17-4	—
		60,000	16-11	18-5	17-4	—	17-6	—	17-8	—

For SI: 1 inch = 25.4 mm, 1 foot = 304.8 mm, 1 pound per square inch = 6.895 kPa, Grade 40 = 280 MPa, Grade 60 = 420 MPa.

DR = Design Required.

a. See Table R608.3 for tolerances permitted from nominal thickness.

b. Table values are based on concrete with a minimum specified compressive strength of 2,500 psi. See Note e.

c. Deflection criterion is $L/240$, where L is the clear span of the lintel in inches, or $^1/_2$ inch, whichever is less.

d. Linear interpolation between lintels depths, D, is permitted provided the two cells being used to interpolate are shaded.

e. Where concrete with a minimum specified compressive strength of 3,000 psi is used, spans in cells that are shaded shall be permitted to be multiplied by 1.05.

f. Lintel depth, D, is permitted to include the available height of wall located directly above the lintel, provided that the increased lintel depth spans the entire length of the lintel.

g. The maximum clear opening width between two solid wall segments shall be 18 feet. See Section R608.7.2.1. Lintel spans in the table greater than 18 feet are shown for interpolation and information purposes only.

TABLE R608.8(10)
MAXIMUM ALLOWABLE CLEAR SPANS FOR WAFFLE-GRID AND SCREEN-GRID LINTELS WITHOUT STIRRUPS IN NONLOAD-BEARING WALLS[c, d, e, f, g]

LINTEL DEPTH[h], D (Inches)	FORM TYPE AND NOMINAL WALL THICKNESS (Inches)					
	6-Inch Waffle-grid[a]		8-inch Waffle-grid[a]		6-Inch Screen-grid[b]	
	Lintel supporting					
	Concrete Wall	Light-framed Gable	Concrete Wall	Light-framed Gable	Concrete Wall	Light-framed Gable
	Maximum Clear Span of Lintel (feet - Inches)					
8	10-3	8-8	8-8	8-3	—	—
12	9-2	7-6	7-10	7-1	8-8	6-9
16	10-11	10-0	9-4	9-3	—	—
20	12-5	12-2	10-7	11-2	—	—
24	13-9	14-2	11-10	12-11	13-0	12-9

For SI: 1 inch = 25.4 mm, 1 foot = 304.8 mm, Grade 40 = 280 MPa, Grade 60 = 420 MPa.

a. Where lintels are formed with waffle-grid forms, form material shall be removed, if necessary, to create top and bottom flanges of the lintel that are not less than 3 inches in depth (in the vertical direction), are not less than 5 inches in width for 6-inch waffle-grid forms and not less than 7 inches in width for 8-inch waffle-grid forms. See Figure R608.8(3). Flat-form lintels shall be permitted in lieu of waffle-grid lintels. See Tables R608.8(2) through R608.8(5).

b. Where lintels are formed with screen-grid forms, form material shall be removed if necessary to create top and bottom flanges of the lintel that are not less than 5 inches in width and not less than 2.5 inches in depth (in the vertical direction). See Figure R608.8(4). Flat-form lintels shall be permitted in lieu of screen-grid lintels. See Tables R608.8(2) through R608.8(5).

c. See Table R608.3 for tolerances permitted from nominal thickness and minimum dimensions and spacing of cores.

d. Table values are based on concrete with a minimum specified compressive strength of 2,500 psi. See Note g.

e. Deflection criterion is $L/240$, where L is the clear span of the lintel in inches, or $^1/_2$ inch, whichever is less.

f. Top and bottom reinforcement shall consist of a No. 4 bar having a minimum yield strength of 40,000 psi.

g. Where concrete with a minimum specified compressive strength of 3,000 psi is used, spans in shaded cells shall be permitted to be multiplied by 1.05.

h. Lintel depth, D, is permitted to include the available height of wall located directly above the lintel, provided that the increased lintel depth spans the entire length of the lintel.

R608.9 Requirements for connections–general. Concrete walls shall be connected to footings, floors, ceilings and roofs in accordance with this section.

R608.9.1 Connections between concrete walls and light-framed floor, ceiling and roof systems. Connections between concrete walls and light-framed floor, ceiling and roof systems using the prescriptive details of Figures R608.9(1) through R608.9(12) shall comply with this section and Sections R608.9.2 and R608.9.3.

R608.9.1.1 Anchor bolts. Anchor bolts used to connect light-framed floor, ceiling and roof systems to concrete walls in accordance with Figures R608.9(1) through R608.9(12) shall have heads, or shall be rods with threads on both ends with a hex or square nut on the end embedded in the concrete. Bolts and threaded rods shall comply with Section R608.5.2.2. Anchor bolts with J- or L-hooks shall not be used where the connection details in these figures are used.

R608.9.1.2 Removal of stay-in-place form material at bolts. Holes in stay-in-place forms for installing bolts for attaching face-mounted wood ledger boards to the wall shall be not less than 4 inches (102 mm) in diameter for forms not greater than $1^1/_2$ inches (38 mm) in thickness, and increased 1 inch (25 mm) in diameter for each $^1/_2$-inch (12.7 mm) increase in form thickness. Holes in stay-in-place forms for installing bolts for attaching face-mounted cold-formed steel tracks to the wall shall be not less than 4 inches (102 mm) square. The wood ledger board or steel track shall be in direct contact with the concrete at each bolt location.

Exception: A vapor retarder or other material less than or equal to $^1/_{16}$ inch (1.6 mm) in thickness is permitted to be installed between the wood ledger or cold-formed track and the concrete.

R608.9.2 Connections between concrete walls and light-framed floor systems. Connections between concrete walls and light-framed floor systems shall be in accordance with one of the following:

1. For floor systems of wood-framed construction, the provisions of Section R608.9.1 and the prescriptive details of Figures R608.9(1) through R608.9(4), where permitted by the tables accompanying those figures. Portions of connections of wood-framed floor systems not noted in the figures shall be in accordance with Section R502, or AWC WFCM, if applicable. Wood framing members shall be of a species having a specific gravity equal to or greater than 0.42.
2. For floor systems of cold-formed steel construction, the provisions of Section R608.9.1 and the prescriptive details of Figures R608.9(5) through R608.9(8), where permitted by the tables accompanying those figures. Portions of connections of cold-formed steel-framed floor systems not noted in the figures shall be in accordance with Section R505, or AISI S230, if applicable.
3. Proprietary connectors selected to resist loads and load combinations in accordance with Appendix A (ASD) or Appendix B (LRFD) of PCA 100.
4. An engineered design using loads and load combinations in accordance with Appendix A (ASD) or Appendix B (LRFD) of PCA 100.
5. An engineered design using loads and material design provisions in accordance with this code, or in accordance with ASCE 7, ACI 318, and AWC NDS for wood-framed construction or AISI S100 for cold-formed steel frame construction.

R608.9.3 Connections between concrete walls and light-framed ceiling and roof systems. Connections between concrete walls and light-framed ceiling and roof systems shall be in accordance with one of the following:

1. For ceiling and roof systems of wood-framed construction, the provisions of Section R608.9.1 and the prescriptive details of Figures R608.9(9) and R608.9(10), where permitted by the tables accompanying those figures. Portions of connections of wood-framed ceiling and roof systems not noted in the figures shall be in accordance with Section R802, or AWC WFCM, if applicable. Wood framing members shall be of a species having a specific gravity equal to or greater than 0.42.
2. For ceiling and roof systems of cold-formed steel construction, the provisions of Section R608.9.1 and the prescriptive details of Figures R608.9(11) and R608.9(12), where permitted by the tables accompanying those figures. Portions of connections of cold-formed-steel framed ceiling and roof systems not noted in the figures shall be in accordance with Section R804, or AISI S230, if applicable.
3. Proprietary connectors selected to resist loads and load combinations in accordance with Appendix A (ASD) or Appendix B (LRFD) of PCA 100.
4. An engineered design using loads and load combinations in accordance with Appendix A (ASD) or Appendix B (LRFD) of PCA 100.
5. An engineered design using loads and material design provisions in accordance with this code, or in accordance with ASCE 7, ACI 318, and AWC NDS for wood-framed construction or AISI S100 for cold-formed steel-framed construction.

R608.10 Floor, roof and ceiling diaphragms. Floors and roofs in buildings with exterior walls of concrete shall be designed and constructed as diaphragms. Where gable-end walls occur, ceilings shall be designed and constructed as diaphragms. The design and construction of floors, roofs and ceilings of wood framing or cold-formed-steel framing serving as diaphragms shall comply with the applicable requirements of this code, or AWC WFCM or AISI S230, if applicable. Wood framing members shall be of a species having a specific gravity equal to or greater than 0.42.

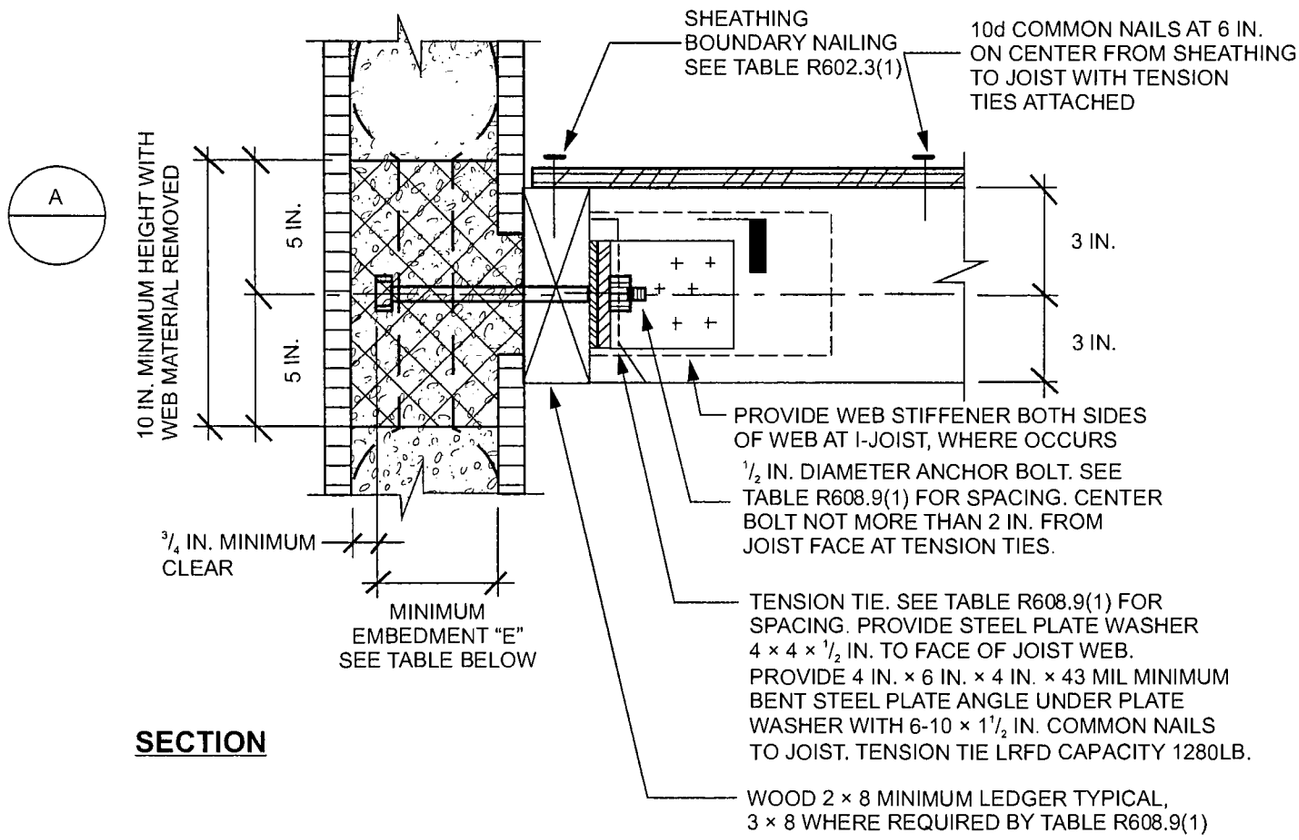

SECTION

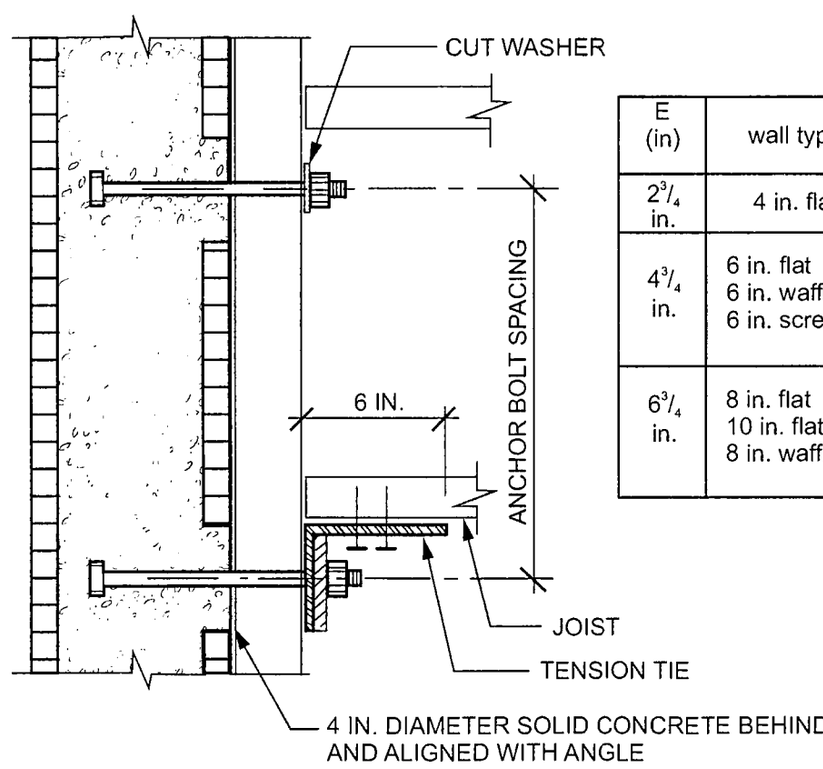

E (in)	wall type
2 3/4 in.	4 in. flat
4 3/4 in.	6 in. flat 6 in. waffle-grid 6 in. screen-grid
6 3/4 in.	8 in. flat 10 in. flat 8 in. waffle-grid

DETAIL A – PLAN VIEW

For SI: 1 mil = 0.0254 mm, 1 inch = 25.4 mm, 1 pound-force = 4.448 N.

FIGURE R608.9(1)
WOOD-FRAMED FLOOR TO SIDE OF CONCRETE WALL, FRAMING PERPENDICULAR

TABLE R608.9(1)
WOOD-FRAMED FLOOR TO SIDE OF CONCRETE WALL, FRAMING PERPENDICULAR[a, b]

ANCHOR BOLT SPACING (inches)	TENSION TIE SPACING (inches)	BASIC WIND SPEED (mph)					
		115B	120B	130B	140B	150B	160B
		—	—	110C	119C	127C	136C
		—	—	—	110D	117D	125D
12	12						
12	24						
12	36						
12	48						
16	16						
16	32						
16	48						
19.2	19.2						
19.2	38.4						

For SI: 1 inch = 25.4 mm, 1 mile per hour = 0.447 m/s.

a. This table is for use with the detail in Figure R608.9(1). Use of this detail is permitted where a cell is not shaded and prohibited where shaded.

b. Wall design per other provisions of Section R608 is required.

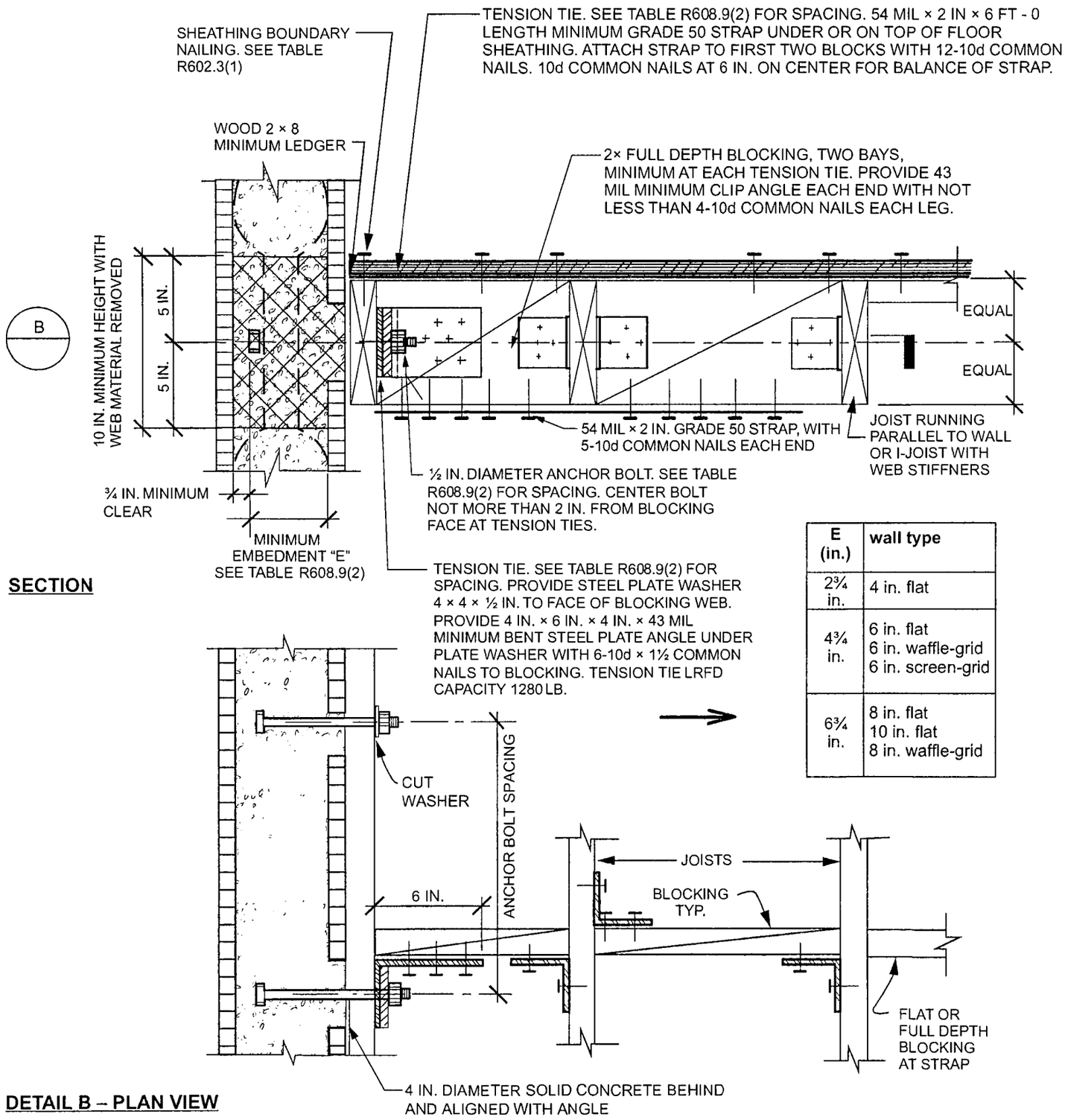

E (in.)	wall type
2¾ in.	4 in. flat
4¾ in.	6 in. flat 6 in. waffle-grid 6 in. screen-grid
6¾ in.	8 in. flat 10 in. flat 8 in. waffle-grid

For SI: 1 mil = 0.0254 mm, 1 inch = 25.4 mm, 1 foot = 304.8 mm, 1 pound-force = 4.448 N.

FIGURE R608.9(2)
WOOD-FRAMED FLOOR TO SIDE OF CONCRETE WALL, FRAMING PARALLEL

TABLE R608.9(2)
WOOD-FRAMED FLOOR TO SIDE OF CONCRETE WALL, FRAMING PARALLEL[a, b]

ANCHOR BOLT SPACING (inches)	TENSION TIE SPACING (inches)	BASIC WIND SPEED (mph) AND WIND EXPOSURE CATEGORY					
		115B	120B	130B	140B	150B	160B
		—	—	110C	119C	127C	136C
		—	—	—	110D	117D	125D
12	12						
12	24						
12	36						
12	48						
16	16						
16	32						
16	48						
19.2	19.2						
19.2	38.4						
24	24						
24	48						

For SI: 1 inch = 25.4 mm, 1 mile per hour = 0.447 m/s.

a. This table is for use with the detail in Figure R608.9(2). Use of this detail is permitted where a cell is not shaded and prohibited where shaded.

b. Wall design per other provisions of Section R608 is required.

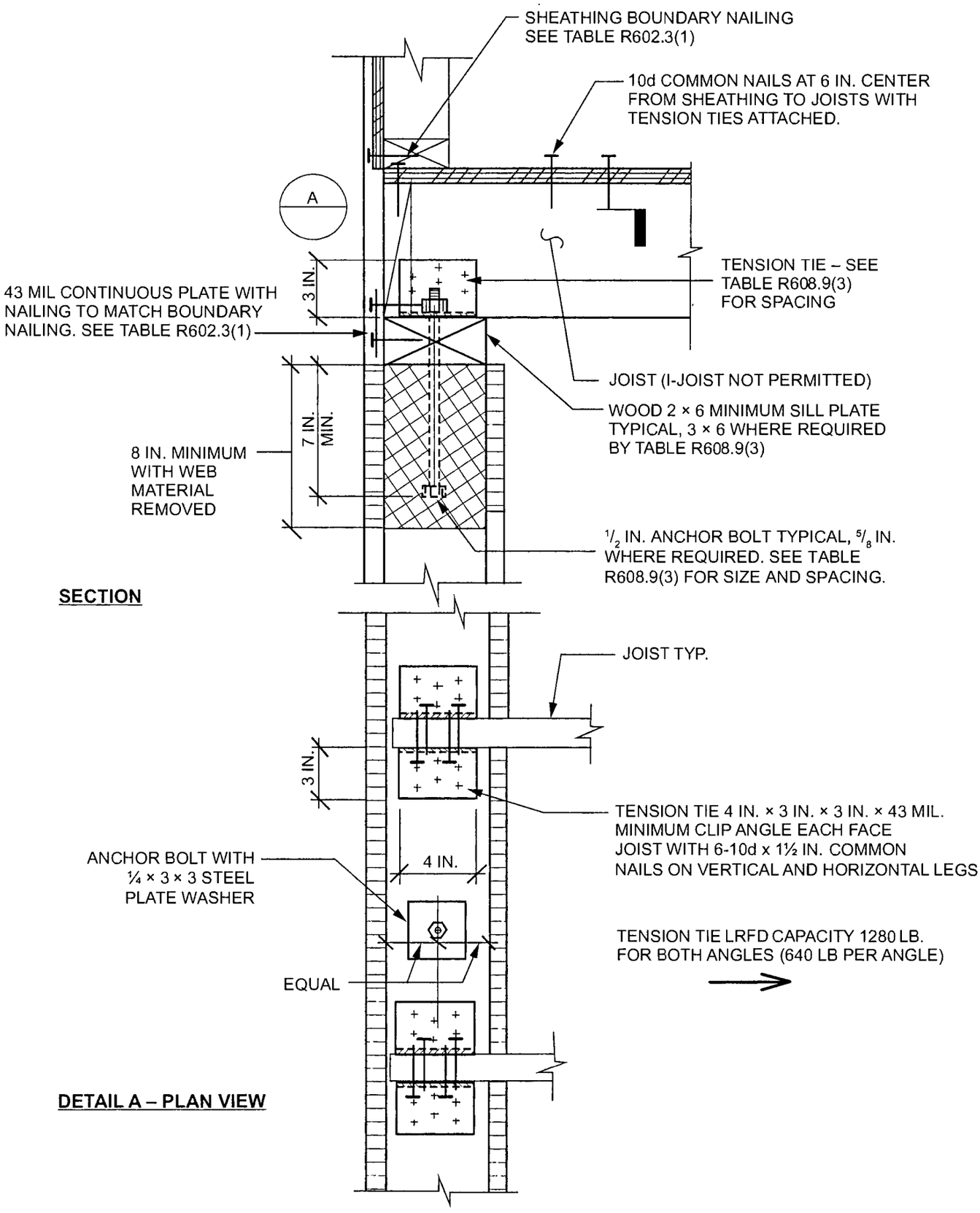

For SI: 1 mil = 0.0254 mm, 1 inch = 25.4 mm, 1 pound-force = 4.448 N.

FIGURE R608.9(3)
WOOD-FRAMED FLOOR TO TOP OF CONCRETE WALL FRAMING, PERPENDICULAR

TABLE R608.9(3)
WOOD-FRAMED FLOOR TO TOP OF CONCRETE WALL, FRAMING PERPENDICULAR[a, b, c, d, e]

ANCHOR BOLT SPACING (Inches)	TENSION TIE SPACING (Inches)	BASIC WIND SPEED (mph) AND WIND EXPOSURE CATEGORY					
		115B	120B	130B	140B	150B	160B
		—	—	110C	119C	127C	136C
		—	—	—	110D	117D	125D
12	12						6
12	24					6	6
12	36					6	6
12	48				6	6	6
16	16					6	6A
16	32				6	6	6A
16	48			6	6	6	6A
19.2	19.2				6A	6A	6B
19.2	38.4			6	6A	6A	6B
24	24			6A	6B	6B	6B
24	48		6	6A	6B	6B	8B

For SI: 1 inch = 25.4 mm, 1 mile per hour = 0.447 m/s.

a. This table is for use with the detail in Figure R608.9(3). Use of this detail is permitted where cell is not shaded.

b. Wall design per other provisions in Section R608 is required.

c. For wind design, minimum 4-inch-nominal wall is permitted in unshaded cells that do not contain a number.

d. Numbers 6 and 8 indicate minimum permitted nominal wall thickness in inches necessary to develop required strength (capacity) of connection. As a minimum, this nominal thickness shall occur in the portion of the wall indicated by the cross hatching in Figure R608.9(3). For the remainder of the wall, see Note b.

e. Letter "A" indicates that a minimum nominal 3 × 6 sill plate is required. Letter "B" indicates that a $^5/_8$-inch-diameter anchor bolt and a minimum nominal 3 × 6 sill plate are required.

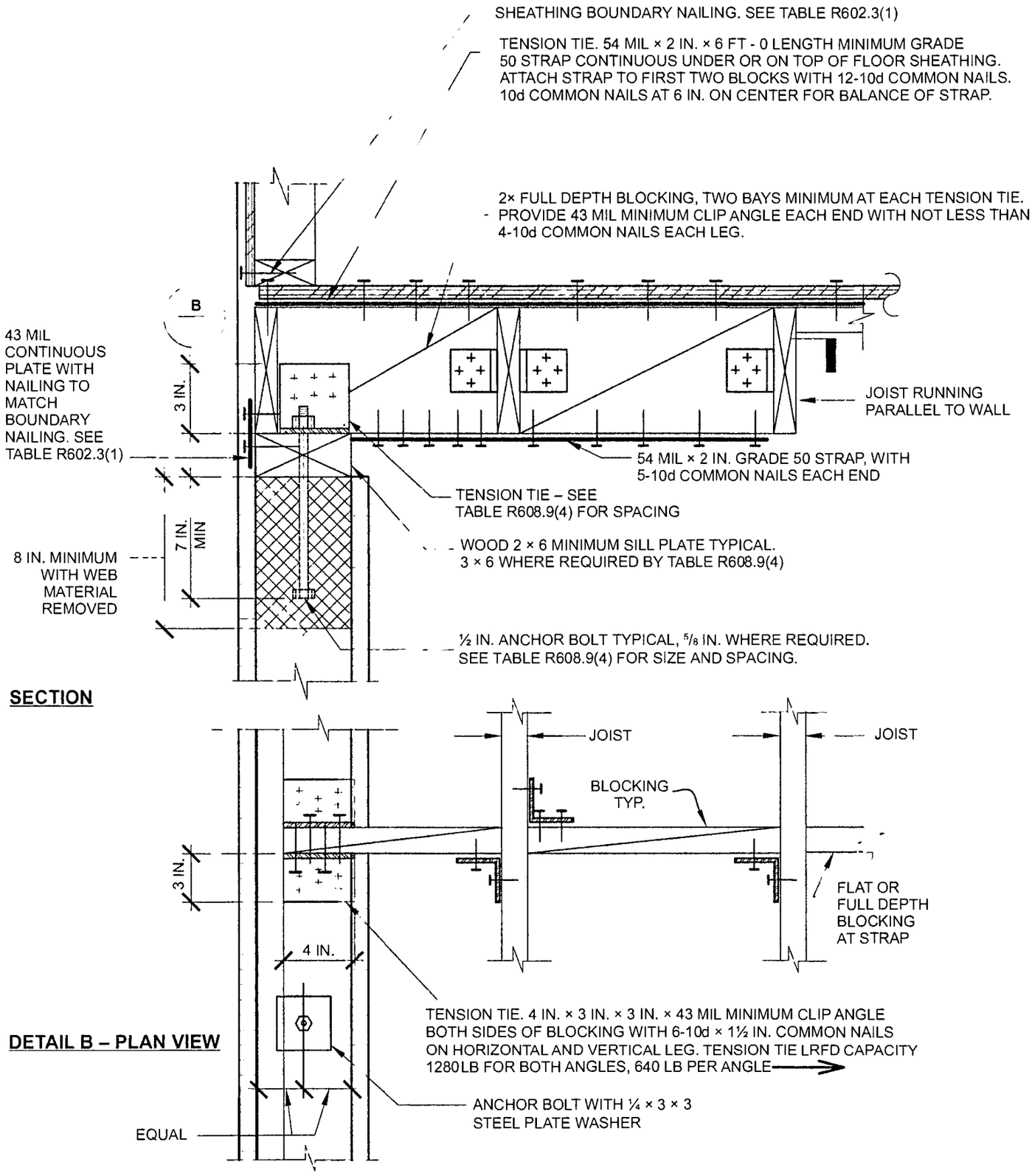

For SI: 1 mil = 0.0254 mm, 1 inch = 25.4 mm, 1 foot = 304.8 mm, 1 pound-force = 4.448 N.

FIGURE R608.9(4)
WOOD-FRAMED FLOOR TO TOP OF CONCRETE WALL, FRAMING PARALLEL

TABLE R608.9(4)
WOOD-FRAMED FLOOR TO TOP OF CONCRETE WALL, FRAMING PARALLEL[a, b, c, d, e]

ANCHOR BOLT SPACING (inches)	TENSION TIE SPACING (inches)	BASIC WIND SPEED (mph) AND WIND EXPOSURE CATEGORY					
		115B	120B	130B	140B	150B	160B
		—	—	110C	119C	127C	136C
		—	—	—	110D	117D	125D
12	12						6
12	24					6	6
12	36					6	6
12	48				6	6	6
16	16					6	6A
16	32				6	6	6A
16	48			6	6	6	6A
19.2	19.2				6A	6A	6B
19.2	38.4			6	6A	6A	6B
24	24			6A	6B	6B	6B
24	48		6	6A	6B	6B	8B

For SI: 1 inch = 25.4 mm, 1 mile per hour = 0.447 m/s.

a. This table is for use with the detail in Figure R608.9(4). Use of this detail is permitted where a cell is not shaded.

b. Wall design per other provisions of Section R608 is required.

c. For wind design, minimum 4-inch-nominal wall is permitted in unshaded cells that do not contain a number.

d. Numbers 6 and 8 indicate minimum permitted nominal wall thickness in inches necessary to develop required strength (capacity) of connection. As a minimum, this nominal thickness shall occur in the portion of the wall indicated by the cross hatching in Figure R608.9(4). For the remainder of the wall, see Note b.

e. Letter "A" indicates that a minimum nominal 3 × 6 sill plate is required. Letter "B" indicates that a $^5/_8$-inch-diameter anchor bolt and a minimum nominal 3 × 6 sill plate are required.

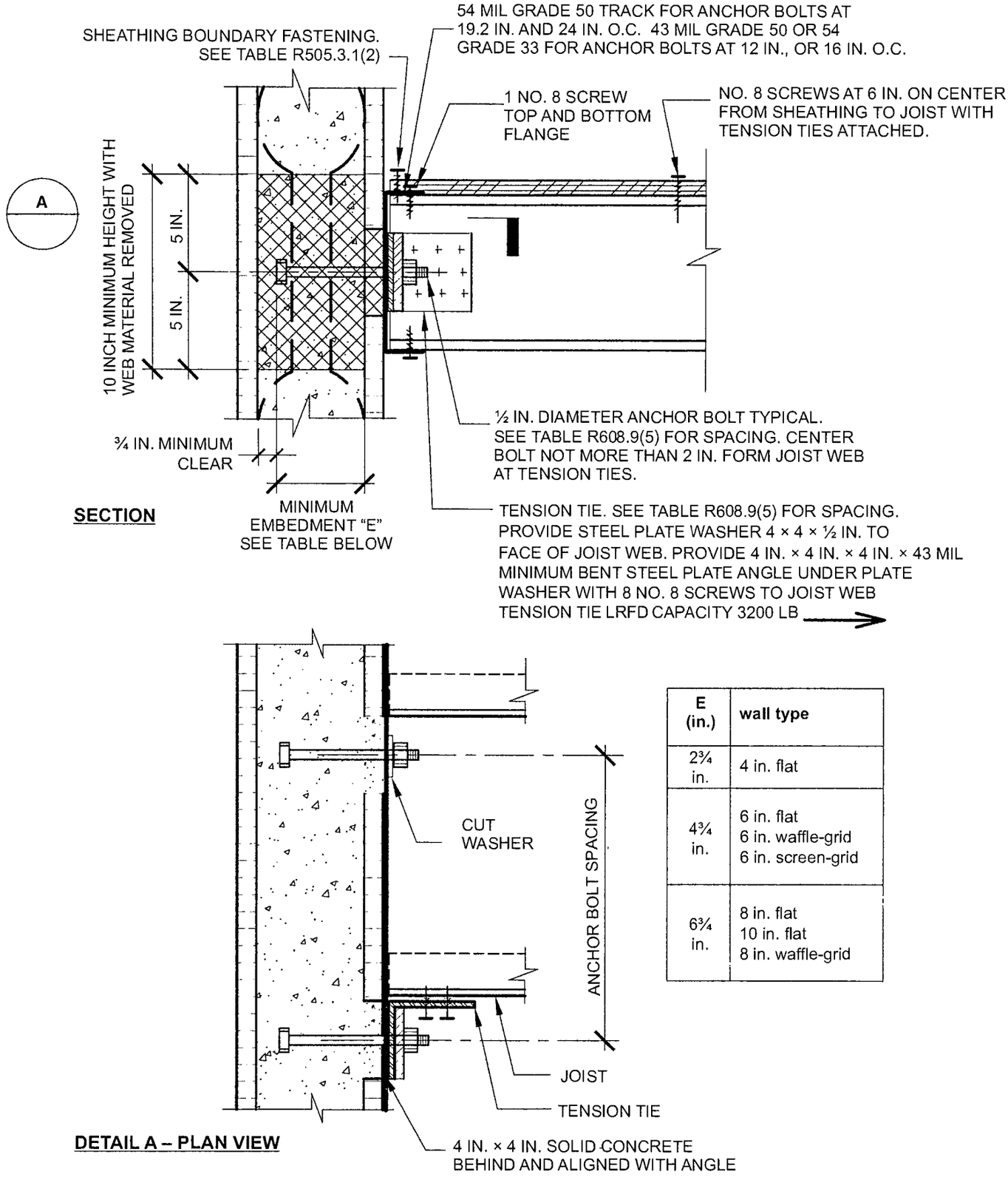

E (in.)	wall type
2¾ in.	4 in. flat
4¾ in.	6 in. flat 6 in. waffle-grid 6 in. screen-grid
6¾ in.	8 in. flat 10 in. flat 8 in. waffle-grid

For SI: 1 mil = 0.0254 mm, 1 inch = 25.4 mm, 1 pound-force = 4.448 N.

FIGURE R608.9(5)
COLD-FORMED STEEL FLOOR TO SIDE OF CONCRETE WALL, FRAMING PERPENDICULAR

TABLE R608.9(5)
COLD-FORMED STEEL-FRAMED FLOOR TO SIDE OF CONCRETE WALL, FRAMING PERPENDICULAR[a, b, c]

ANCHOR BOLT SPACING (Inches)	TENSION TIE SPACING (inches)	BASIC WIND SPEED (mph) AND WIND EXPOSURE CATEGORY					
		115B	120B	130B	140B	150B	160B
		—	—	110C	119C	127C	136C
		—	—	—	110D	117D	125D
12	12						
12	24						
12	36						
12	48						
16	16						
16	32						
16	48						
19.2	19.2						
19.2	38.4						
24	24						
24	48						

For SI: 1 inch = 25.4 mm, 1 mile per hour = 0.4470 m/s.

a. This table is for use with the detail in Figure R608.9(5). Use of this detail is permitted where a cell is not shaded.

b. Wall design per other provisions of Section R608 is required.

c. For wind design, minimum 4-inch-nominal wall is permitted in unshaded cells that do not contain a number.

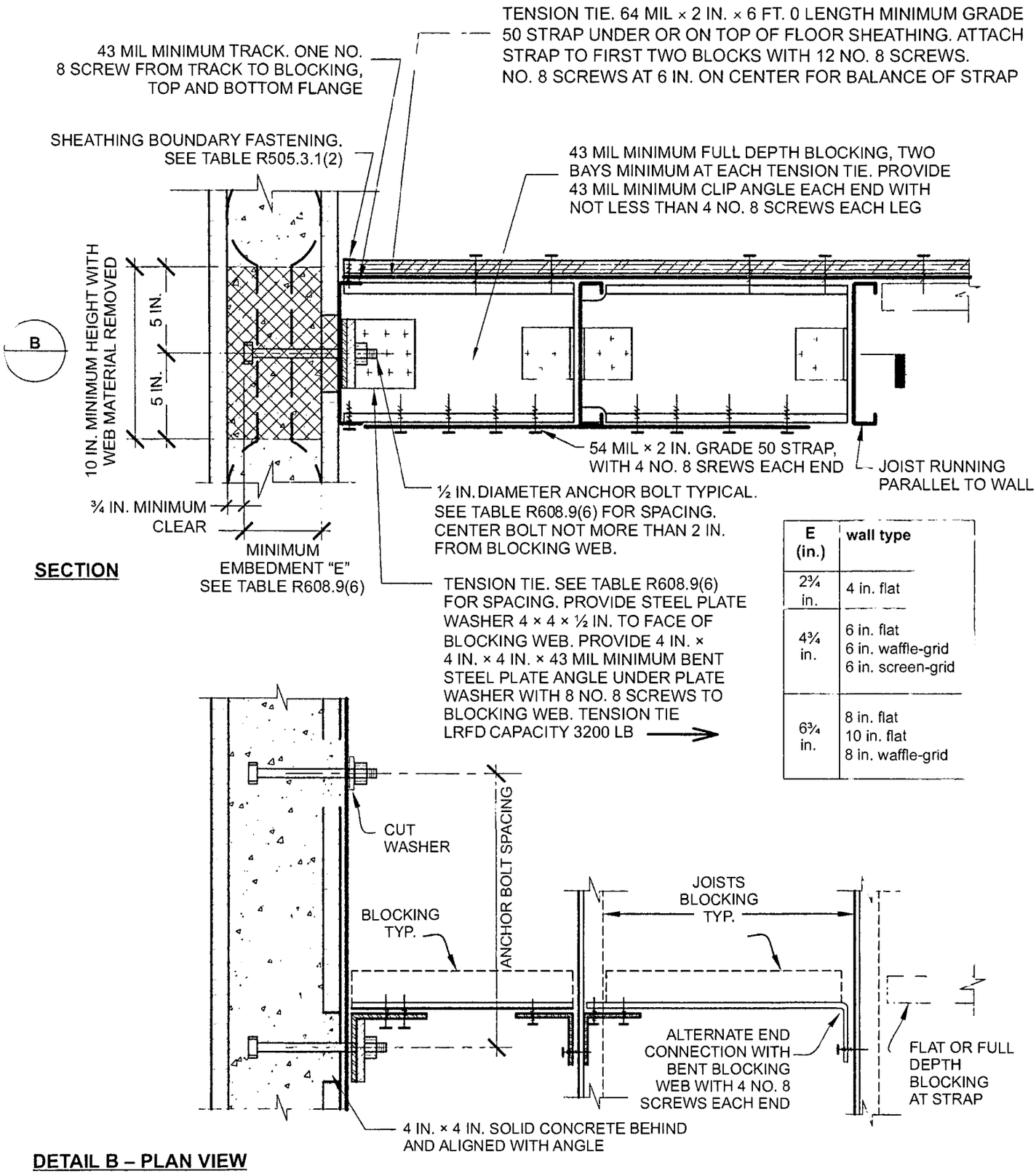

E (in.)	wall type
2¾ in.	4 in. flat
4¾ in.	6 in. flat 6 in. waffle-grid 6 in. screen-grid
6¾ in.	8 in. flat 10 in. flat 8 in. waffle-grid

For SI: 1 mil = 0.0254 mm, 1 inch = 25.4 mm, 1 pound-force = 4.448 N.

FIGURE R608.9(6)
COLD-FORMED STEEL FLOOR TO SIDE OF CONCRETE WALL, FRAMING PARALLEL

TABLE R608.9(6)
COLD-FORMED STEEL-FRAMED FLOOR TO SIDE OF CONCRETE WALL, FRAMING PARALLEL[a, b, c]

ANCHOR BOLT SPACING (inches)	TENSION TIE SPACING (inches)	BASIC WIND SPEED (mph) AND WIND EXPOSURE CATEGORY					
		115B	120B	130B	140B	150B	160B
		—	—	110C	119C	127C	136C
		—	—	—	110D	117D	125D
12	12						
12	24						
12	36						
12	48						
16	16						
16	32						
16	48						
19.2	19.2						
19.2	38.4						
24	24						
24	48						

For SI: 1 inch = 25.4 mm, 1 mile per hour = 0.447 m/s.

a. This table is for use with the detail in Figure R608.9(6). Use of this detail is permitted where a cell is not shaded.

b. Wall design per other provisions of Section R608 is required.

c. For wind design, minimum 4-inch-nominal wall is permitted in unshaded cells that do not contain a number.

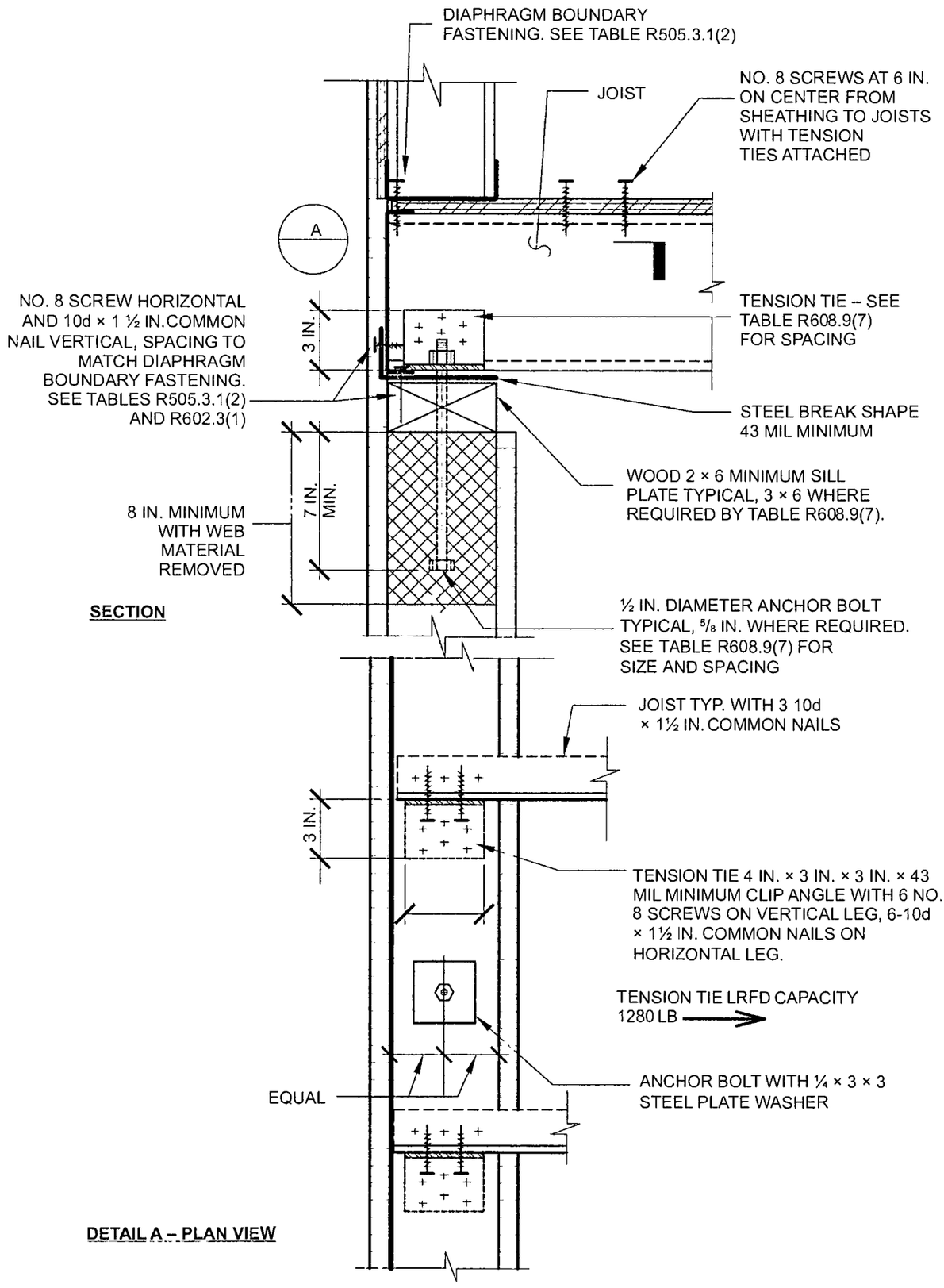

For SI: 1 mil = 0.0254 mm, 1 inch = 25.4 mm, 1 pound-force = 4.448 N.

FIGURE R608.9(7)
COLD-FORMED STEEL FLOOR TO TOP OF CONCRETE WALL, FRAMING PERPENDICULAR

TABLE R608.9(7)
COLD-FORMED STEEL-FRAMED FLOOR TO TOP OF CONCRETE WALL, FRAMING PERPENDICULAR[a, b, c, d, e]

ANCHOR BOLT SPACING (inches)	TENSION TIE SPACING (Inches)	BASIC WIND SPEED AND WIND EXPOSURE CATEGORY (mph)					
		115B	120B	130B	140B	150B	160B
		—	—	110C	119C	127C	136C
		—	—	—	110D	117D	125D
12	12						6
12	24					6	6
16	16					6	6A
16	32				6	6	6A
19.2	19.2				6A	6A	6B
19.2	38.4			6	6A	6A	6B
24	24			6A	6B	6B	6B

For SI: 1 inch = 25.4 mm, 1 mile per hour = 0.447 m/s.

a. This table is for use with the detail in Figure R608.9(7). Use of this detail is permitted where a cell is not shaded.

b. Wall design per other provisions of Section R608 is required.

c. For wind design, minimum 4-inch-nominal wall is permitted in unshaded cells that do not contain a number.

d. Number 6 indicates minimum permitted nominal wall thickness in inches necessary to develop required strength (capacity) of connection. As a minimum, this nominal thickness shall occur in the portion of the wall indicated by the cross hatching in Figure R608.9(7). For the remainder of the wall, see Note b.

e. Letter "A" indicates that a minimum nominal 3 × 6 sill plate is required. Letter "B" indicates that a $^5/_8$-inch-diameter anchor bolt and a minimum nominal 3 × 6 sill plate are required.

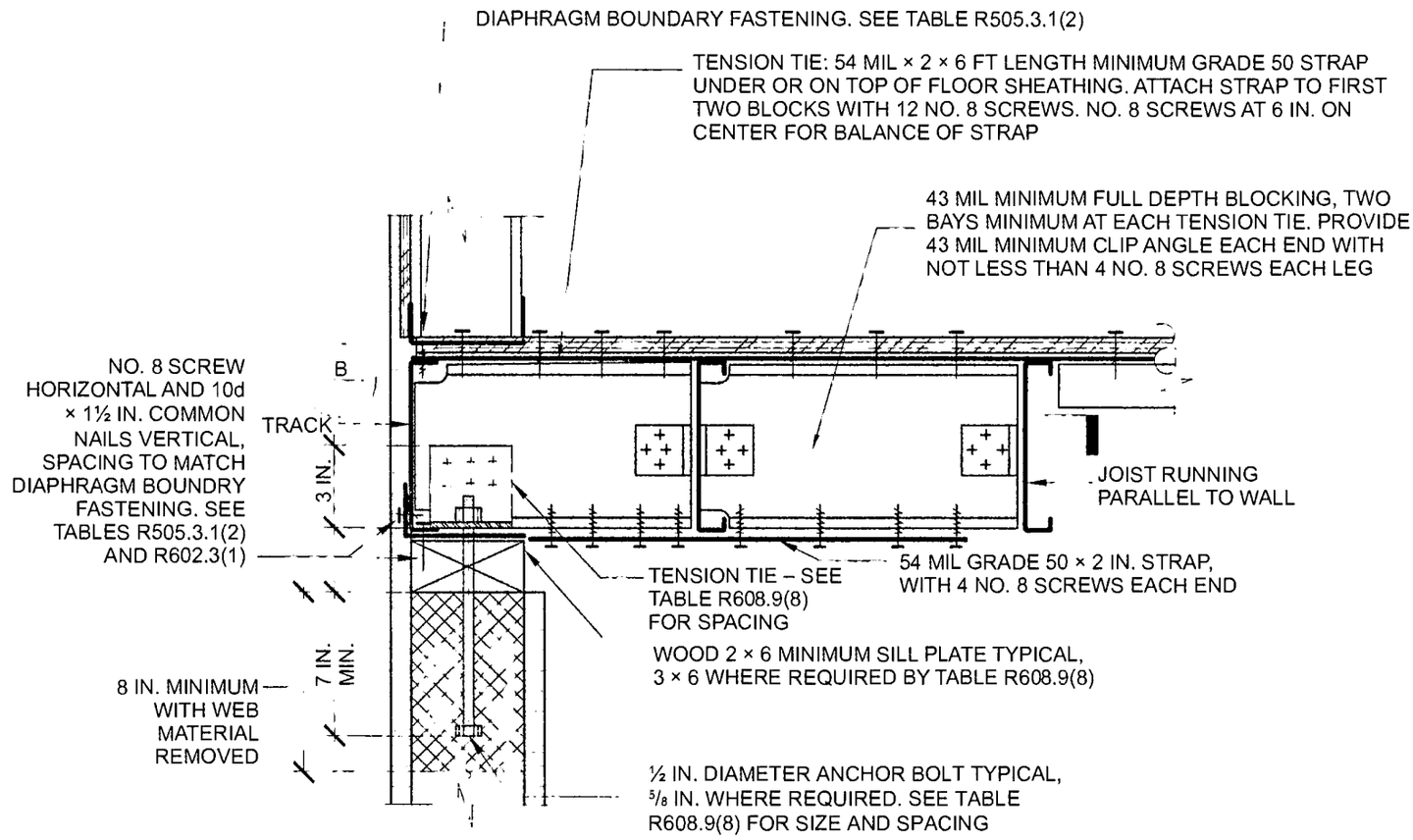

For SI: 1 mil = 0.0254 mm, 1 inch = 25.4 mm, 1 pound-force = 4.448 N.

FIGURE R608.9(8)
COLD-FORMED STEEL FLOOR TO TOP OF CONCRETE WALL, FRAMING PARALLEL

TABLE R608.9(8)
COLD-FORMED STEEL-FRAMED FLOOR TO TOP OF CONCRETE WALL, FRAMING PARALLEL[a, b, c, d, e]

ANCHOR BOLT SPACING (inches)	TENSION TIE SPACING (inches)	BASIC WIND SPEED AND WIND EXPOSURE CATEGORY (mph)					
		115B	120B	130B	140B	150B	160B
		—	—	110C	119C	127C	136C
		—	—	—	110D	117D	125D
12	12						6
12	24					6	6
16	16					6	6A
16	32				6	6	6A
19.2	19.2				6A	6A	6B
19.2	38.4			6	6A	6A	6B
24	24			6A	6B	6B	6B

For SI: 1 inch = 25.4 mm, 1 mile per hour = 0.447 m/s.

a. This table is for use with the detail in Figure R608.9(8). Use of this detail is permitted where a cell is not shaded.

b. Wall design per other provisions of Section R608 is required.

c. For wind design, minimum 4-inch-nominal wall is permitted in unshaded cells that do not contain a number.

d. Number 6 indicates minimum permitted nominal wall thickness in inches necessary to develop required strength (capacity) of connection. As a minimum, this nominal thickness shall occur in the portion of the wall indicated by the cross hatching in Figure R608.9(8). For the remainder of the wall, see Note b.

e. Letter "A" indicates that a minimum nominal 3 × 6 sill plate is required. Letter "B" indicates that a $^5/_8$-inch-diameter anchor bolt and a minimum nominal 3 × 6 sill plate are required.

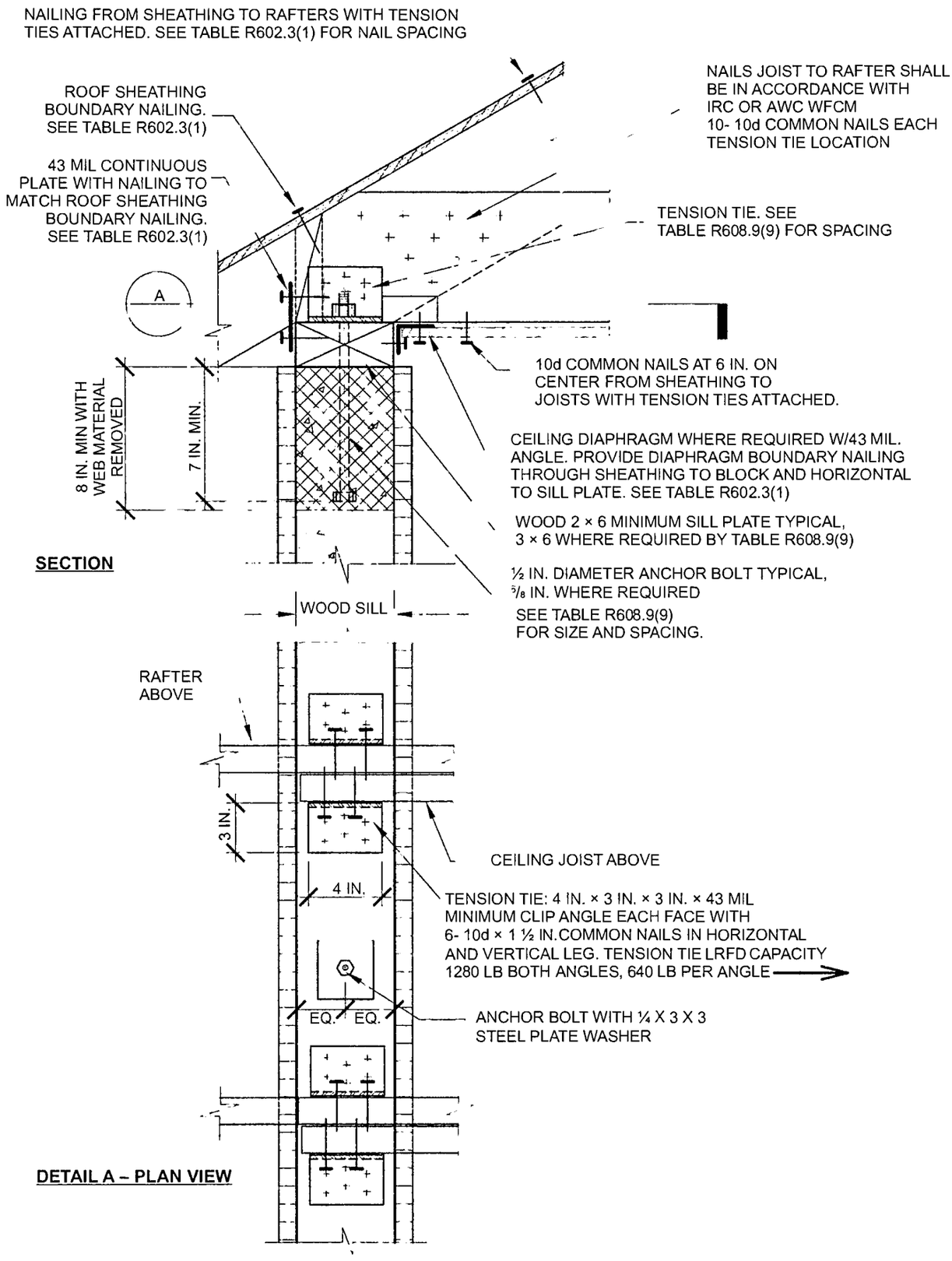

For SI: 1 mil = 0.0254 mm, 1 inch = 25.4 mm, 1 pound-force = 4.448 N.

FIGURE R608.9(9)
WOOD-FRAMED ROOF TO TOP OF CONCRETE WALL, FRAMING PERPENDICULAR

TABLE R608.9(9)
WOOD-FRAMED ROOF TO TOP OF CONCRETE WALL, FRAMING PERPENDICULAR[a, b, c, d, e]

ANCHOR BOLT SPACING (inches)	TENSION TIE SPACING (inches)	BASIC WIND SPEED (mph) AND WIND EXPOSURE CATEGORY					
		115B	120B	130B	140B	150B	160B
		—	—	110C	119C	127C	136C
		—	—	—	110D	117D	125D
12	12						6
12	24						6
12	36					6	6
12	48				6	6	6
16	16					6	6
16	32					6	6
16	48				6	6	6
19.2	19.2					6	6
19.2	38.4				6	6	
24	24				6		
24	48			6	8B		

For SI: 1 inch = 25.4 mm, 1 mile per hour = 0.447 m/s.

a. This table is for use with the detail in Figure R608.9(9). Use of this detail is permitted where a cell is not shaded, and prohibited where shaded.

b. Wall design per other provisions of Section R608 is required.

c. For wind design, minimum 4-inch-nominal wall is permitted in unshaded cells that do not contain a number.

d. Numbers 6 and 8 indicate minimum permitted nominal wall thickness in inches necessary to develop required strength (capacity) of connection. As a minimum, this nominal thickness shall occur in the portion of the wall indicated by the cross hatching in Figure R608.9(9). For the remainder of the wall, see Note b.

e. Letter "B" indicates that a $^5/_8$-inch-diameter anchor bolt and a minimum nominal 3 × 6 sill plate are required.

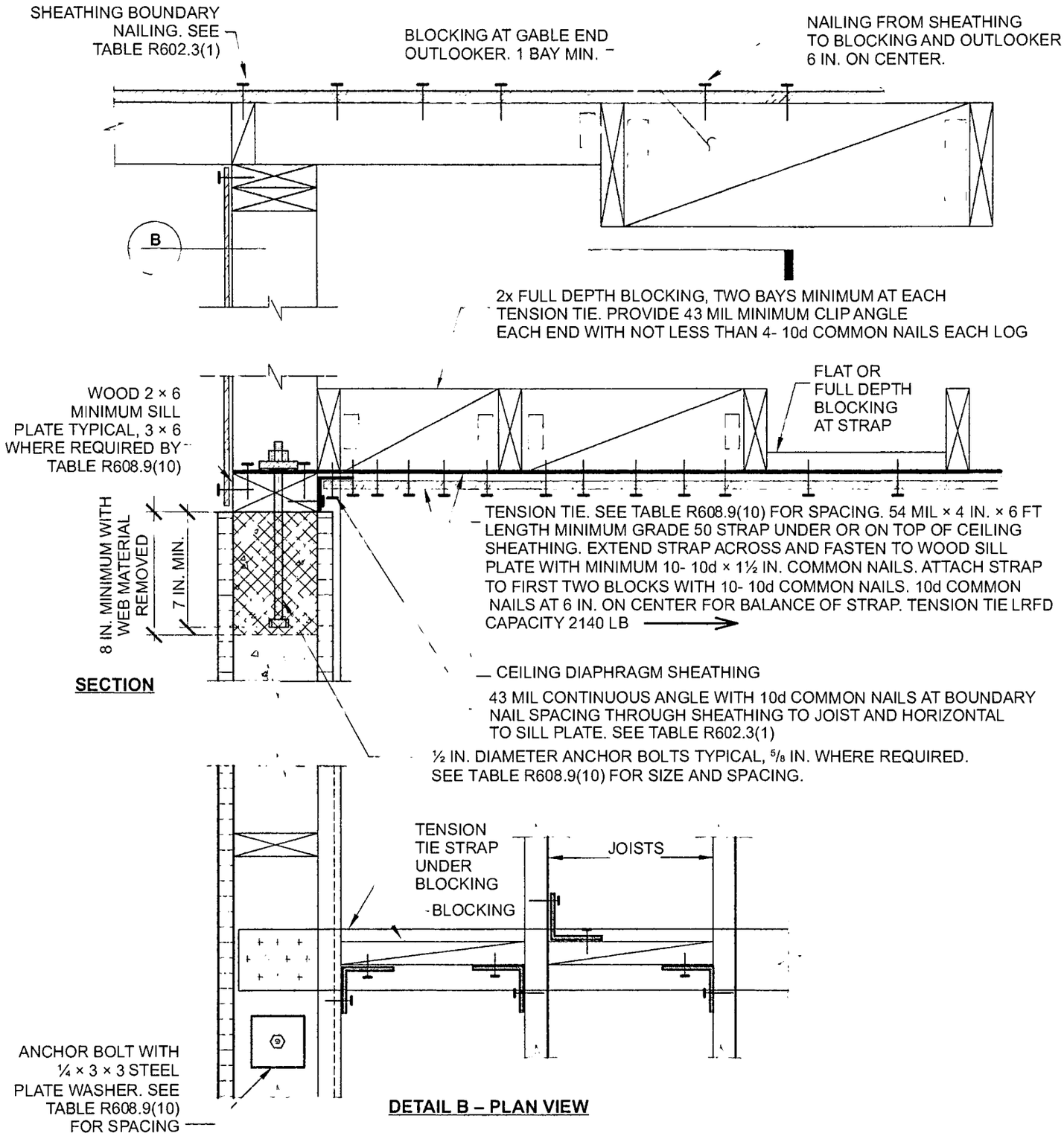

For SI: 1 mil = 0.0254 mm, 1 inch = 25.4 mm, 1 pound-force = 4.448 N.

FIGURE R608.9(10)
WOOD-FRAMED ROOF TO TOP OF CONCRETE WALL, FRAMING PARALLEL

TABLE R608.9(10)
WOOD-FRAMED ROOF TO TOP OF CONCRETE WALL, FRAMING PARALLEL[a, b, c, d, a]

ANCHOR BOLT SPACING (inches)	TENSION TIE SPACING (Inches)	BASIC WIND SPEED (mph) AND WIND EXPOSURE CATEGORY					
		115B	120B	130B	140B	150B	160B
		—	—	110C	119C	127C	136C
		—	—	—	110D	117D	125D
12	12						6
12	24						6
12	36					6	6
12	48				6	6	6
16	16					6	6
16	32					6	6
16	48				6	6	6
19.2	19.2					6	6
19.2	38.4				6	6	
24	24				6		
24	48			6	8B		

For SI: 1 inch = 25.4 mm, 1 mile per hour = 0.447 m/s.

a. This table is for use with the detail in Figure R608.9(10). Use of this detail is permitted where a cell is not shaded, and prohibited where shaded.

b. Wall design per other provisions of Section R608 is required.

c. For wind design, minimum 4-inch-nominal wall is permitted in cells that do not contain a number.

d. Numbers 6 and 8 indicate minimum permitted nominal wall thickness in inches necessary to develop required strength (capacity) of connection. As a minimum, this nominal thickness shall occur in the portion of the wall indicated by the cross hatching in Figure R608.9(10). For the remainder of the wall, see Note b.

e. Letter "B" indicates that a $^5/_8$-inch-diameter anchor bolt and a minimum nominal 3 × 6 sill plate are required.

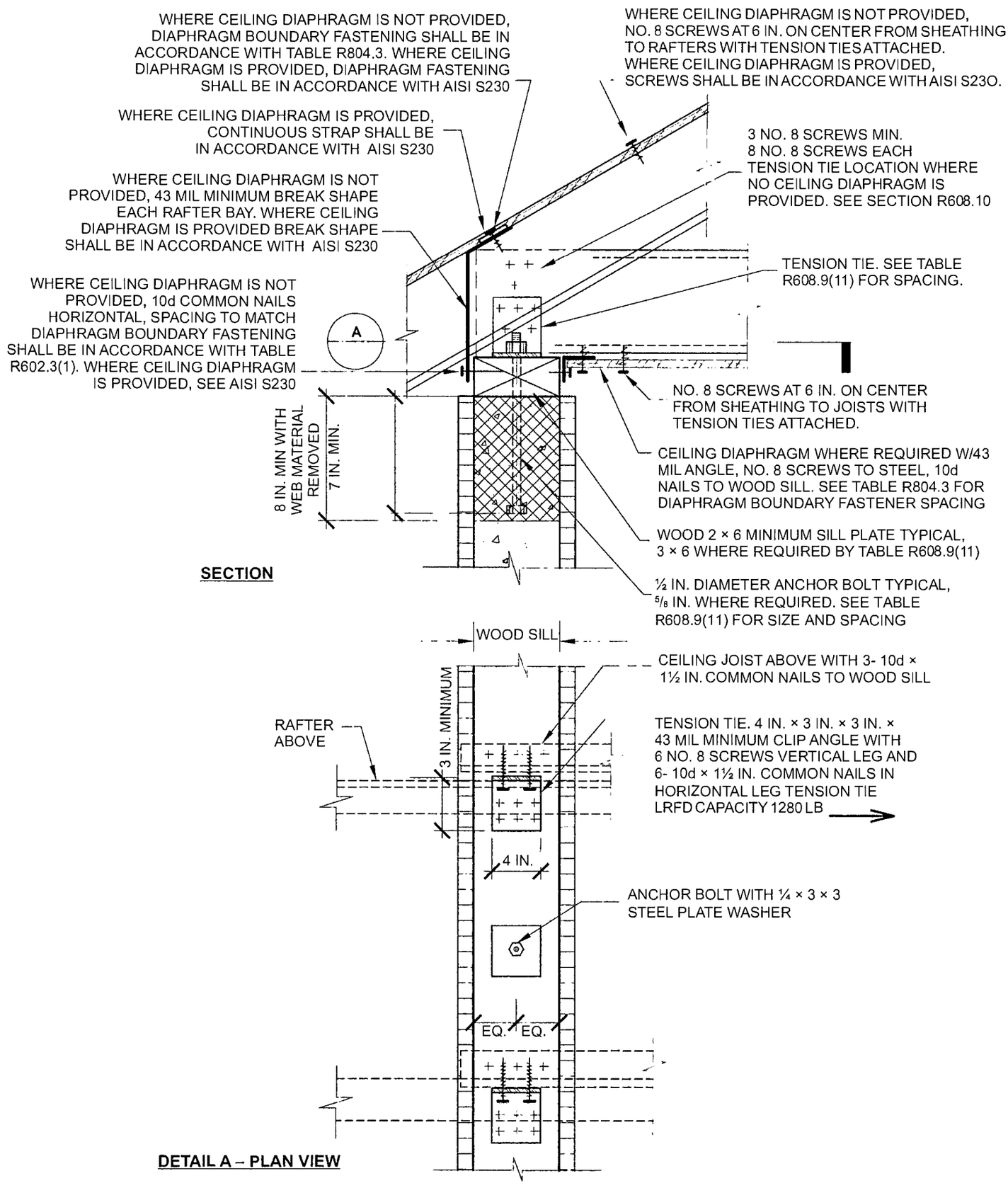

For SI: 1 mil = 0.0254 mm, 1 inch = 25.4 mm, 1 foot = 304.8 mm, 1 pound-force = 4.448 N.

FIGURE R608.9(11)
COLD-FORMED STEEL ROOF TO TOP OF CONCRETE WALL, FRAMING PERPENDICULAR

TABLE R608.9(11)
WOOD-FRAMED ROOF TO TOP OF CONCRETE WALL, FRAMING PERPENDICULAR[a, b, c, d, e]

ANCHOR BOLT SPACING (Inches)	TENSION TIE SPACING (inches)	BASIC WIND SPEED (mph) AND WIND EXPOSURE CATEGORY					
		115B	120B	130B	140B	150B	160B
		—	—	110C	119C	127C	136C
		—	—	—	110D	117D	125D
12	12						6
12	24						6
16	16					6	6
16	32					6	6
19.2	19.2					6	6
19.2	38.4				6	6	6
24	24				6	6A	6B

For SI: 1 inch = 25.4 mm, 1 mile per hour = 0.447 m/s.

a. This table is for use with the detail in Figure R608.9(11). Use of this detail is permitted where a cell is not shaded.

b. Wall design per other provisions of Section R608 is required.

c. For wind design, minimum 4-inch-nominal wall is permitted in unshaded cells that do not contain a number.

d. Number 6 indicates minimum permitted nominal wall thickness in inches necessary to develop required strength (capacity) of connection. As a minimum, this nominal thickness shall occur in the portion of the wall indicated by the cross hatching in Figure R608.9(11). For the remainder of the wall, see Note b.

e. Letter "A" indicates that a minimum nominal 3 × 6 sill plate is required. Letter "B" indicates that a $^{5}/_{8}$-inch-diameter anchor bolt and a minimum nominal 3 × 6 sill plate are required.

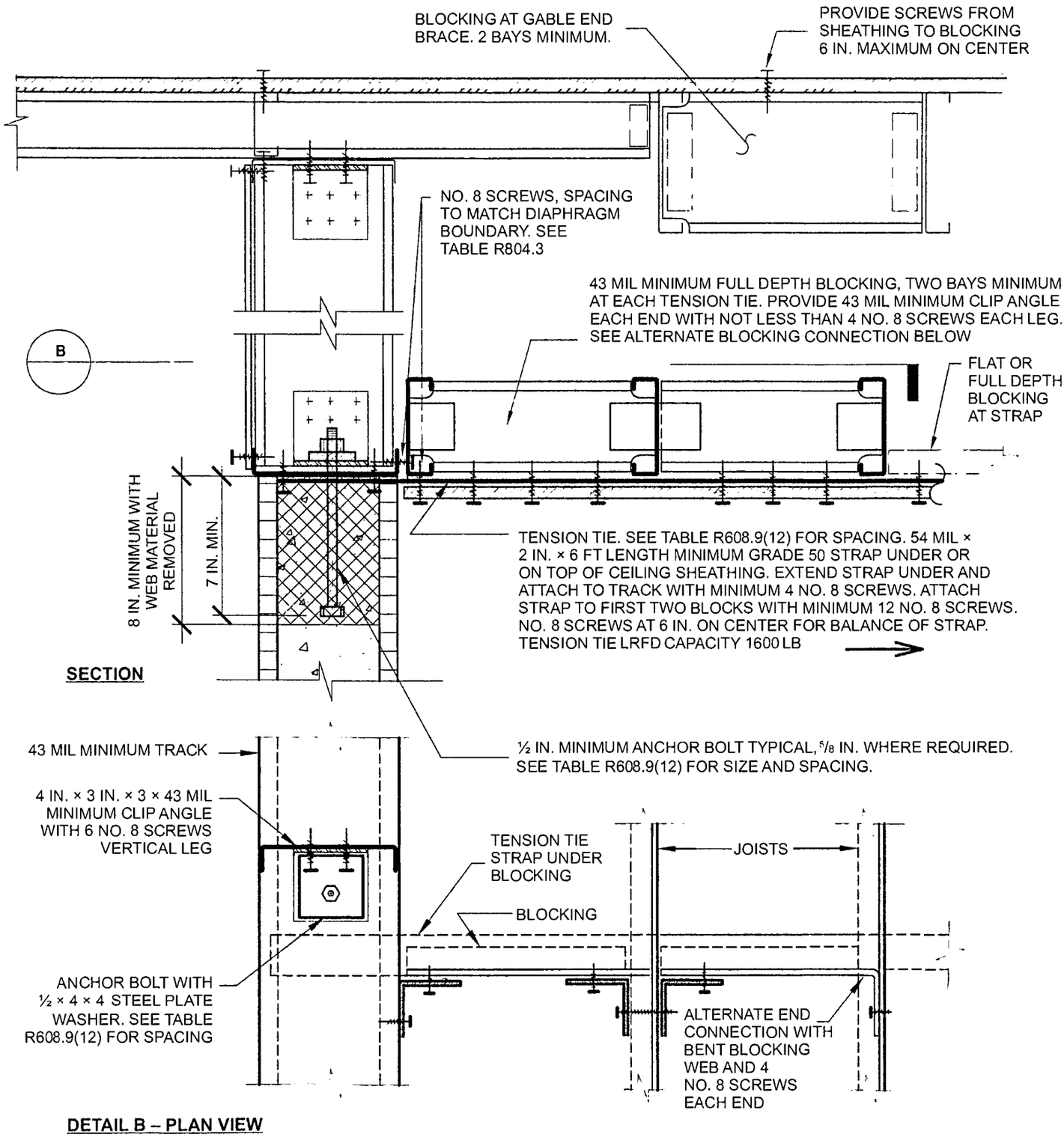

For SI: 1 mil = 0.0254 mm, 1 inch = 25.4 mm, 1 pound-force = 4.448 N.

FIGURE R608.9(12)
COLD-FORMED STEEL ROOF TO TOP OF CONCRETE WALL, FRAMING PARALLEL

TABLE R608.9(12)
COLD-FORMED STEEL ROOF TO TOP OF CONCRETE WALL, FRAMING PARALLEL[a, b, c, d, e]

ANCHOR BOLT SPACING (inches)	TENSION TIE SPACING (inches)	BASIC WIND SPEED (mph) AND WIND EXPOSURE CATEGORY					
		115B	120B	130B	140B	150B	160B
		—	—	110C	119C	127C	136C
		—	—	—	110D	117D	125D
12	12						6
12	24						6
16	16					6	6
16	32					6	6
19.2	19.2					6	6
19.2	38.4				6	6	6
24	24				6	6	6B

For SI: 1 inch = 25.4 mm, 1 mile per hour = 0.447 m/s.

a. This table is for use with the detail in Figure R608.9(12). Use of this detail is permitted where a cell is not shaded.

b. Wall design per other provisions of Section R608 is required.

c. For wind design, minimum 4-inch-nominal wall is permitted in cells that do not contain a number.

d. Number 6 indicates minimum permitted nominal wall thickness in inches necessary to develop required strength (capacity) of connection. As a minimum, this nominal thickness shall occur in the portion of the wall indicated by the cross hatching in Figure R608.9(12). For the remainder of the wall, see Note b.

e. Letter "B" indicates that a $^5/_8$-inch-diameter anchor bolt is required.

SECTION R609
EXTERIOR WINDOWS AND DOORS

R609.1 General. This section prescribes performance and construction requirements for exterior windows and doors installed in walls. Windows and doors shall be installed and flashed in accordance with the fenestration manufacturer's written instructions. Window and door openings shall be flashed in accordance with Section R703.4. Written installation instructions shall be provided by the fenestration manufacturer for each window or door.

R609.2 Performance. Exterior windows and doors shall be capable of resisting the design wind loads specified in Table R301.2(2) adjusted for height and exposure in accordance with Table R301.2(3) or determined in accordance with ASCE 7 using the allowable stress design load combinations of ASCE 7. For exterior windows and doors tested in accordance with Sections R609.3 and R609.5, required design wind pressures determined from ASCE 7 using the ultimate strength design (USD) are permitted to be multiplied by 0.6. Design wind loads for exterior glazing not part of a labeled assembly shall be permitted to be determined in accordance with Chapter 24 of the *California Building Code*. Design wind loads for exterior glazing not part of a labeled assembly shall be permitted to be determined in accordance with Chapter 24 of the *California Building Code*.

R609.3 Testing and labeling. Exterior windows and sliding doors shall be tested by an approved independent laboratory, and bear a label identifying manufacturer, performance characteristics and approved inspection agency to indicate compliance with AAMA/WDMA/CSA 101/I.S.2/A440. Exterior side-hinged doors shall be tested and labeled as conforming to AAMA/WDMA/CSA 101/I.S.2/A440 or AMD 100, or comply with Section R609.5.

Exception: Decorative glazed openings.

R609.3.1 Comparative analysis. Structural wind load design pressures for window and door units different than the size tested in accordance with Section R609.3 shall be permitted to be different than the design value of the tested unit where determined in accordance with one of the following comparative analysis methods:

1. Structural wind load design pressures for window and door units smaller than the size tested in accordance with Section R609.3 shall be permitted to be higher than the design value of the tested unit provided such higher pressures are determined by accepted engineering analysis. Components of the smaller unit shall be the same as those of the tested unit. Where such calculated design pressures are used, they shall be validated by an additional test of the window or door unit having the highest allowable design pressure.
2. In accordance with WDMA I.S.11.

R609.4 Garage doors. Garage doors shall be tested in accordance with either ASTM E330 or ANSI/DASMA 108, and shall meet the acceptance criteria of ANSI/DASMA 108.

R609.5 Other exterior window and door assemblies. Exterior windows and door assemblies not included within the scope of Section R609.3 or R609.4 shall be tested in accordance with ASTM E330. Glass in assemblies covered by this section shall comply with Section R308.5.

R609.6 Windborne debris protection. Protection of exterior windows, glass doors and doors with glass in buildings located in windborne debris regions shall be in accordance with Section R301.2.1.2.

R609.6.1 Fenestration testing and labeling. Fenestration shall be tested by an approved independent laboratory, listed by an approved entity, and bear a label identifying the manufacturer, performance characteristics and an approved inspection agency to indicate compliance with the requirements of the following specification(s):

1. ASTM E1886 and ASTM E1996; or
2. AAMA 506.

R609.6.2 Impact protective systems-testing and labeling. Impact protective systems shall be tested for impact resistance by an approved independent laboratory for compliance with ASTM E1886 and ASTM E1996. Impact protective systems shall be tested for design wind pressure by an approved independent laboratory for compliance with ASTM E330. Required design wind pressures shall be determined in accordance with Table R301.2(2), adjusted for height and exposure in accordance with Table R301.2(3) or determined in accordance with ASCE 7. For the purposes of this section, design wind pressures determined in accordance with ASCE 7 are permitted to be multiplied by 0.6.

Impact protective systems bear a label identifying the manufacturer, performance characteristics and an approved inspection agency. Impact protective systems shall have a permanent label providing traceability to the manufacturer, product designation and performance characteristics. The permanent label shall be acid etched, sand blasted, ceramic fired, laser etched, embossed or of a type that, once applied, cannot be removed without being destroyed.

R609.7 Anchorage methods. The methods cited in this section apply only to anchorage of window and glass door assemblies to the main force-resisting system.

R609.7.1 Anchoring requirements. Window and glass door assemblies shall be anchored in accordance with the published manufacturer's recommendations to achieve the design pressure specified. Substitute anchoring systems used for substrates not specified by the fenestration manufacturer shall provide equal or greater anchoring performance as demonstrated by accepted engineering practice.

R609.7.2 Anchorage details. Products shall be anchored in accordance with the minimum requirements illustrated in Figures R609.7.2(1), R609.7.2(2), R609.7.2(3), R609.7.2(4), R609.7.2(5), R609.7.2(6), R609.7.2(7) and R609.7.2(8).

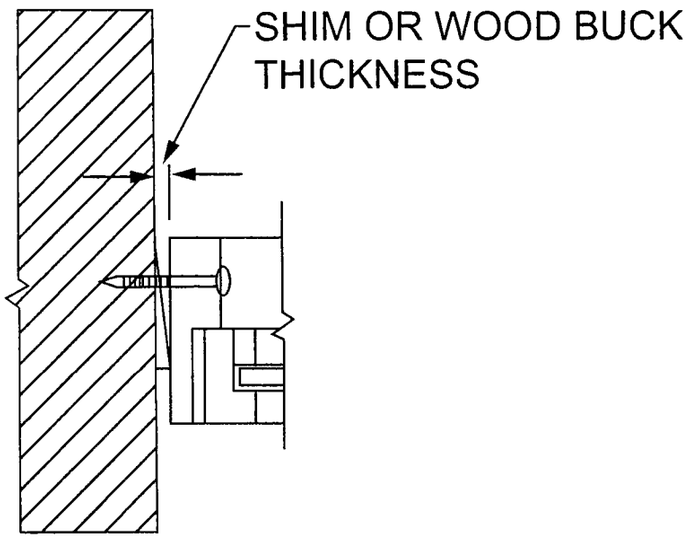

FIGURE R609.7.2(1)
THROUGH THE FRAME

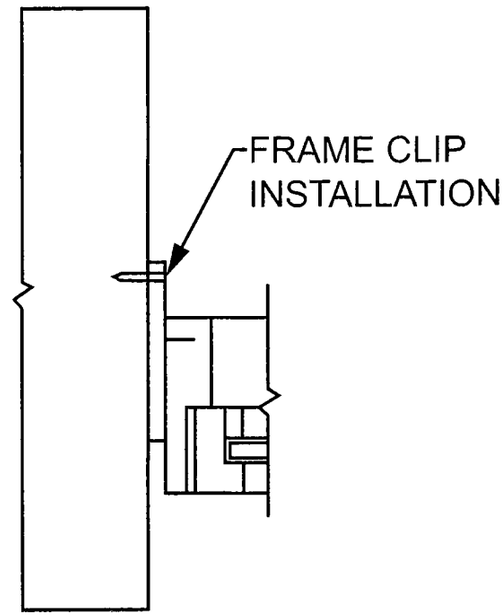

FIGURE R609.7.2(2)
FRAME CLIP

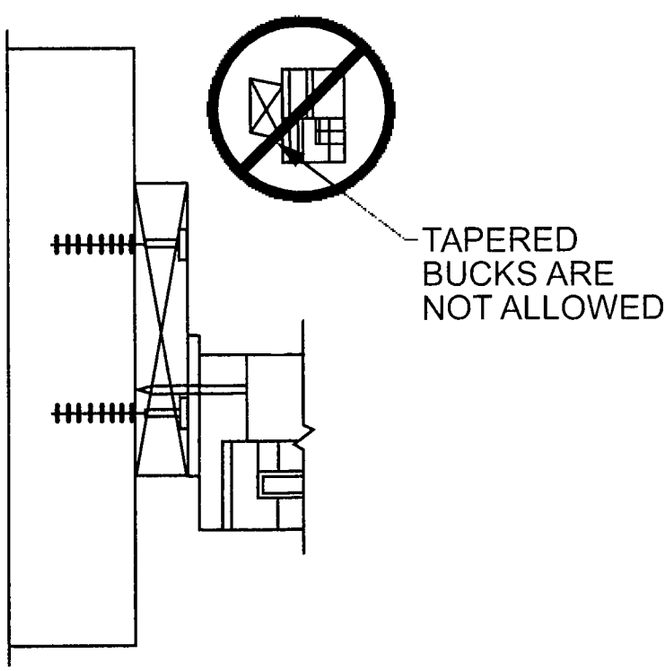

FIGURE R609.7.2(3)
THROUGH THE FRAME

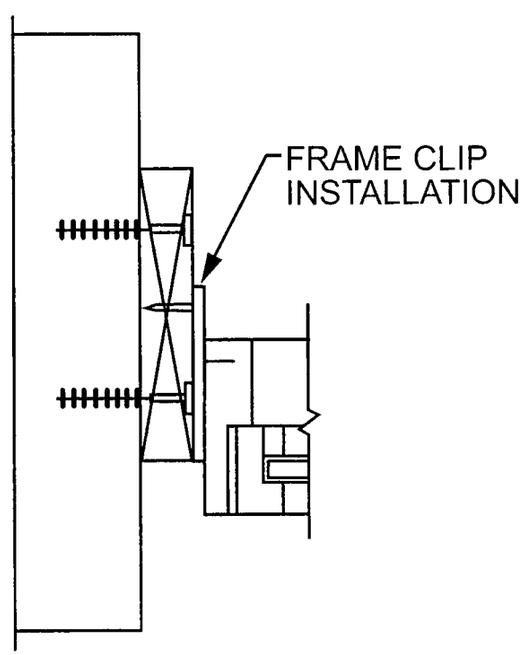

FIGURE R609.7.2(4)
FRAME CLIP

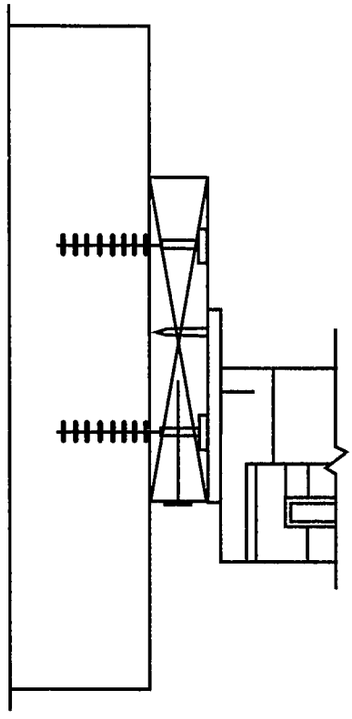

FIGURE R609.7.2(5)
THROUGH THE FLANGE

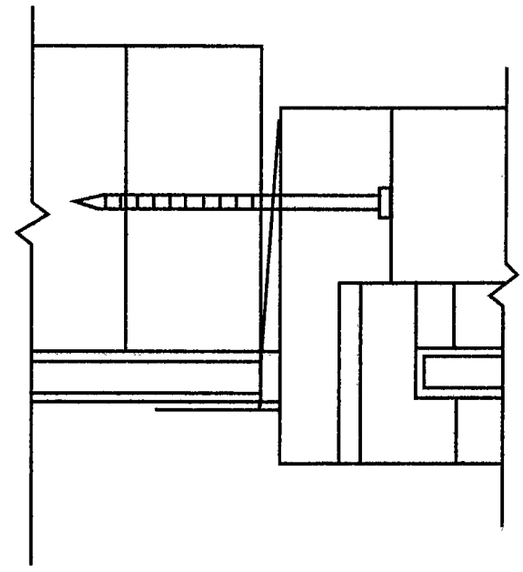

FIGURE R609.7.2(6)
THROUGH THE FLANGE

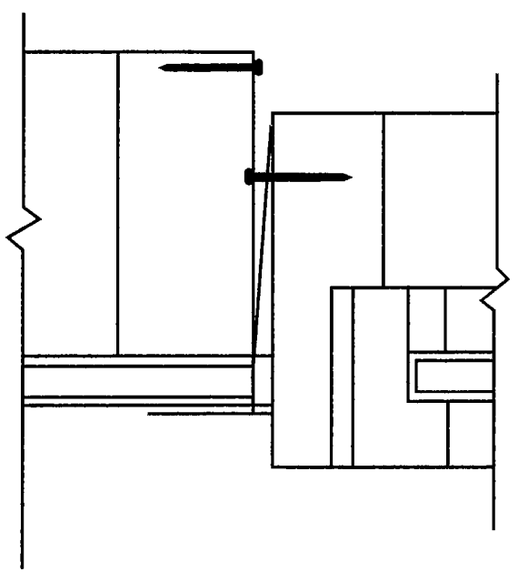

FIGURE R609.7.2(7)
FRAME CLIP

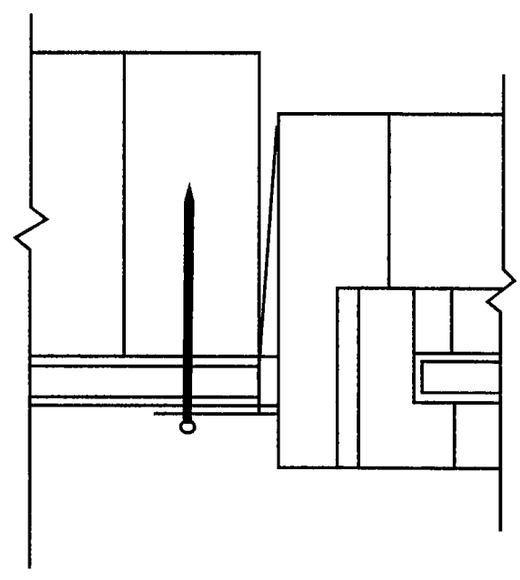

FIGURE R609.7.2(8)
THROUGH THE FLANGE

R609.7.2.1 Masonry, concrete or other structural substrate. Where the wood shim or buck thickness is less than $1^1/_2$ inches (38 mm), window and glass door assemblies shall be anchored through the jamb, or by jamb clip and anchors shall be embedded directly into the masonry, concrete or other substantial substrate material. Anchors shall adequately transfer load from the window or door frame into the rough opening substrate [see Figures R609.7.2(1) and R609.7.2(2)].

Where the wood shim or buck thickness is $1^1/_2$ inches (38 mm) or more, the buck is securely fastened to the masonry, concrete or other substantial substrate, and the buck extends beyond the interior face of the window or door frame, window and glass door assemblies shall be anchored through the jamb, or by jamb clip, or through the flange to the secured wood buck. Anchors shall be embedded into the secured wood buck to adequately transfer load from the window or door frame assembly [see Figures R609.7.2(3), R609.7.2(4) and R609.7.2(5)].

R609.7.2.2 Wood or other approved framing material. Where the framing material is wood or other approved framing material, window and glass door assemblies shall be anchored through the frame, or by frame clip, or through the flange. Anchors shall be embedded into the frame construction to adequately transfer load [see Figures R609.7.2(6), R609.7.2(7) and R609.7.2(8)].

R609.8 Mullions. Mullions shall be tested by an approved testing laboratory in accordance with AAMA 450, or be engineered in accordance with accepted engineering practice. Mullions tested as stand-alone units or qualified by engineering shall use performance criteria cited in Sections R609.8.1, R609.8.2 and R609.8.3. Mullions qualified by an actual test of an entire assembly shall comply with Sections R609.8.1 and R609.8.3.

R609.8.1 Load transfer. Mullions shall be designed to transfer the design pressure loads applied by the window and door assemblies to the rough opening substrate.

R609.8.2 Deflection. Mullions shall be capable of resisting the design pressure loads applied by the window and door assemblies to be supported without deflecting more than $L/175$, where L is the span of the mullion in inches.

R609.8.3 Structural safety factor. Mullions shall be capable of resisting a load of 1.5 times the design pressure loads applied by the window and door assemblies to be supported without exceeding the appropriate material stress levels. If tested by an approved laboratory, the 1.5 times the design pressure load shall be sustained for 10 seconds, and the permanent deformation shall not exceed 0.4 percent of the mullion span after the 1.5 times design pressure load is removed.

SECTION R610
STRUCTURAL INSULATED PANEL WALL CONSTRUCTION

R610.1 General. Structural insulated panel (SIP) walls shall be designed in accordance with the provisions of this section. Where the provisions of this section are used to design structural insulated panel walls, project drawings, typical details and specifications *shall not exempt construction documents from the requirement to be stamped by a California licensed architect or engineer. Notwithstanding other sections of law, the law establishing these provisions is found in Business and Professions Code Sections 5537.1 and 6737.1.*

R610.2 Applicability limits. The provisions of this section shall control the construction of exterior structural insulated panel walls and interior load-bearing structural insulated panel walls for buildings not greater than 60 feet (18 288 mm) in length perpendicular to the joist or truss span, not greater than 40 feet (12 192 mm) in width parallel to the joist or truss span and not greater than two stories in height with each wall not greater than 10 feet (3048 mm) high. Exterior walls installed in accordance with the provisions of this section shall be considered as load-bearing walls. Structural insulated panel walls constructed in accordance with the provisions of this section shall be limited to sites where the ultimate design wind speed (V_{ult}) is not greater than 155 miles per hour (69 m/s) in Exposure B or 140 miles per hour (63 m/s) in Exposure C, the ground snow load is not greater than 70 pounds per square foot (3.35 kPa), and the seismic design category is A, B or C.

R610.3 Materials. SIPs shall comply with the requirements of ANSI/APA PRS 610.1.

R610.3.1 Lumber. The minimum lumber framing material used for SIPs prescribed in this document is NLGA graded No. 2 Spruce-pine-fir. Substitution of other wood species/grades that meet or exceed the mechanical properties and specific gravity of No. 2 Spruce-pine-fir shall be permitted.

R610.3.2 SIP screws. Screws used for the erection of SIPs as specified in Section R610.5 shall be fabricated from steel, shall be provided by the SIP manufacturer and shall be sized to penetrate the wood member to which the assembly is being attached by not less than 1 inch (25 mm). The screws shall be corrosion resistant and have a minimum shank diameter of 0.188 inch (4.7 mm) and a minimum head diameter of 0.620 inch (15.5 mm).

R610.3.3 Nails. Nails specified in Section R610 shall be common or galvanized box unless otherwise stated.

R610.4 SIP wall panels. SIPs shall comply with Figure R610.4 and shall have minimum panel thickness in accordance with Tables R610.5(1) and R610.5(2) for above-grade walls. SIPs shall be identified by grade mark or certificate of inspection issued by an approved agency in accordance with ANSI/APA PRS 610.1.

(HCD 1 and HCD 2) Note: *See the California Factory-Built Housing Law, Health and Safety Code Section 19960 et seq.; and the California Code of Regulations, Title 25, Division 1, Chapter 3; which require building components as addressed in the definition of "factory-built housing" to bear insignia of*

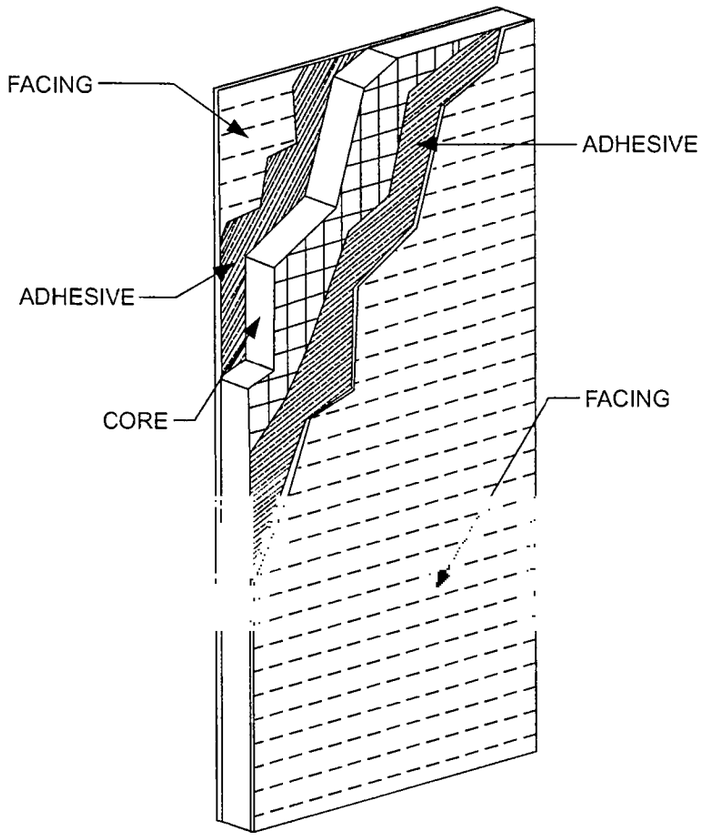

FIGURE R610.4
SIP WALL PANEL

approval issued by the Department of Housing and Community Development, as specified.

R610.5 Wall construction. Exterior walls of SIP construction shall be designed and constructed in accordance with the provisions of this section and Tables R610.5(1) and R610.5(2) and Figures R610.5(1) through R610.5(5). SIP walls shall be fastened to other wood building components in accordance with Tables R602.3(1) through R602.3(4).

Framing shall be attached in accordance with Table R602.3(1) unless otherwise provided for in Section R610.

R610.5.1 Top plate connection. SIP walls shall be capped with a double top plate installed to provide overlapping at corner, intersections and splines in accordance with Figure R610.5.1. The double top plates shall be made up of a single 2-by (nominal 2-inch) top plate having a width equal to the width of the panel core, and shall be recessed into the SIP below. Over this top plate a cap plate shall be placed. The cap plate width shall match the SIP thickness and overlap the facers on both sides of the panel. End joints in top plates shall be offset not less than 24 inches (610 mm).

R610.5.2 Bottom (sole) plate connection. SIP walls shall have full bearing on a sole plate having a width equal to the nominal width of the foam core. Where SIP walls are supported directly on continuous foundations, the wall wood sill plate shall be anchored to the foundation in accordance with Figure R610.5.2 and Section R403.1.

R610.5.3 Panel-to-panel connection. SIPs shall be connected at vertical in-plane joints in accordance with Figure R610.8 or by other approved methods.

R610.5.4 Corner framing. Corner framing of SIP walls shall be constructed in accordance with Figure R610.5.4.

R610.5.5 Wall bracing. SIP walls shall be braced in accordance with Section R602.10. SIP walls shall be considered continuous wood structural panel sheathing (bracing Method CS-WSP) for purposes of computing required bracing. SIP walls shall meet the requirements of Section R602.10.4.2 except that SIP corners shall be fabricated as shown in Figure R610.8. Where SIP walls are used for wall bracing, the SIP bottom plate shall be attached to wood framing below in accordance with Table R602.3(1).

R610.5.6 Thermal barrier. SIP walls shall be separated from the interior of a building by an approved thermal barrier in accordance with Section R316.4.

R610.6 Interior load-bearing walls. Interior load-bearing walls shall be constructed as specified for exterior walls.

R610.7 Drilling and notching. The maximum vertical chase penetration in SIPs shall have a maximum side dimension of 2 inches (51 mm) centered in the panel. Vertical chases shall have a minimum spacing of 24 inches (610 mm) on center. Not more than two horizontal chases shall be permitted in each wall panel, one at 14 inches (360 mm) plus or minus 2 inches (51 mm) from the bottom of the panel and one at 48 inches (1220 mm) plus or minus 2 inches (51 mm) from the bottom edge of the SIP's panel. Additional penetrations are permitted where justified by analysis.

R610.8 Headers. SIP headers shall be designed and constructed in accordance with Table R610.8 and Figure R610.5.1. SIP headers shall be continuous sections without splines. Headers shall be not less than 117/8 inches (302 mm) deep. Headers longer than 4 feet (1219 mm) shall be constructed in accordance with Section R602.7. The strength axis of the factors on the header shall be oriented horizontally.

R610.8.1 Wood structural panel box headers. Wood structural panel box headers shall be allowed where SIP headers are not applicable. Wood structural panel box headers shall be constructed in accordance with Figure R602.7.3 and Table R602.7.3.

TABLE R610.5(1)
MINIMUM THICKNESS FOR SIP WALL SUPPORTING SIP OR LIGHT-FRAME ROOF ONLY (inches)[a]

BUILDING WIDTH (ft)																	
ULTIMATE DESIGN WIND SPEED V_{ult} (mph)		SNOW LOAD (psf)	24			28			32			36			40		
Exp. B	Exp. C		Wall Height (feet)			Wall Height (feet)			Wall Height (feet)			Wall Height (feet)			Wall Height (feet)		
			8	9	10	8	9	10	8	9	10	8	9	10	8	9	10
110	—	20	4.5	4.5	4.5	4.5	4.5	4.5	4.5	4.5	4.5	4.5	4.5	4.5	4.5	4.5	4.5
		30	4.5	4.5	4.5	4.5	4.5	4.5	4.5	4.5	4.5	4.5	4.5	4.5	4.5	4.5	4.5
		50	4.5	4.5	4.5	4.5	4.5	4.5	4.5	4.5	4.5	4.5	4.5	4.5	4.5	4.5	4.5
		70	4.5	4.5	4.5	4.5	4.5	4.5	4.5	4.5	4.5	4.5	4.5	6.5	4.5	4.5	6.5
115	—	20	4.5	4.5	4.5	4.5	4.5	4.5	4.5	4.5	4.5	4.5	4.5	4.5	4.5	4.5	4.5
		30	4.5	4.5	4.5	4.5	4.5	4.5	4.5	4.5	4.5	4.5	4.5	4.5	4.5	4.5	4.5
		50	4.5	4.5	4.5	4.5	4.5	4.5	4.5	4.5	4.5	4.5	4.5	4.5	4.5	4.5	6.5
		70	4.5	4.5	4.5	4.5	4.5	4.5	4.5	4.5	6.5	4.5	4.5	DR	4.5	4.5	DR
130	110	20	4.5	4.5	6.5	4.5	4.5	6.5	4.5	4.5	6.5	4.5	4.5	DR	4.5	4.5	DR
		30	4.5	4.5	6.5	4.5	4.5	6.5	4.5	4.5	DR	4.5	4.5	DR	4.5	4.5	DR
		50	4.5	4.5	DR	4.5	4.5	DR	4.5	4.5	DR	4.5	6.5	DR	4.5	DR	DR
		70	4.5	4.5	DR	4.5	DR	DR	4.5	DR	DR	4.5	DR	DR	DR	DR	DR
140	120	20	4.5	6.5	DR	4.5	6.5	DR	4.5	DR	DR	4.5	DR	DR	4.5	DR	DR
		30	4.5	6.5	DR	4.5	DR	DR	4.5	DR	DR	4.5	DR	DR	4.5	DR	DR
		50	4.5	DR	DR	4.5	DR	DR	DR	DR	DR	DR	DR	DR	DR	DR	DR
		70	4.5	DR	DR	DR	DR	DR	DR	DR	DR	DR	DR	DR	DR	DR	DR

For SI: 1 inch = 25.4 mm, 1 foot = 304.8 mm, 1 pound per square foot = 0.0479 kPa, 1 mile per hour = 0.447 m/s.

DR = Design Required.

a. Design assumptions:

Maximum deflection criteria: $L/240$.

Maximum roof dead load: 10 psf.

Maximum roof live load: 70 psf.

Maximum ceiling dead load: 5 psf.

Maximum ceiling live load: 20 psf.

Wind loads based on Table R301.2 (2).

Strength axis of facing material applied vertically.

TABLE R610.5(2)
MINIMUM THICKNESS FOR SIP WALL SUPPORTING SIP OR LIGHT-FRAME ONE STORY AND ROOF ONLY (inches)[a]

ULTIMATE DESIGN WIND SPEED V_{ult} (mph)		SNOW LOAD (psf)	BUILDING WIDTH (ft)														
			24			28			32			36			40		
Exp. B	Exp. C		Wall Height (feet)			Wall Height (feet)			Wall Height (feet)			Wall Height (feet)			Wall Height (feet)		
			8	9	10	8	9	10	8	9	10	8	9	10	8	9	10
110	—	20	4.5	4.5	4.5	4.5	4.5	4.5	4.5	4.5	6.5	4.5	4.5	DR	4.5	4.5	DR
		30	4.5	4.5	4.5	4.5	4.5	4.5	4.5	4.5	6.5	4.5	4.5	DR	4.5	6.5	DR
		50	4.5	4.5	4.5	4.5	4.5	6.5	4.5	4.5	DR	4.5	DR	DR	DR	DR	DR
		70	4.5	4.5	6.5	4.5	4.5	DR	4.5	DR	DR	DR	DR	DR	DR	DR	DR
115	—	20	4.5	4.5	4.5	4.5	4.5	6.5	4.5	4.5	DR	4.5	4.5	DR	4.5	DR	DR
		30	4.5	4.5	4.5	4.5	4.5	6.5	4.5	4.5	DR	4.5	6.5	DR	4.5	DR	DR
		50	4.5	4.5	6.5	4.5	4.5	DR	4.5	DR	DR	4.5	DR	DR	DR	DR	DR
		70	4.5	4.5	DR	4.5	DR	DR	DR	DR	DR	DR	DR	DR	DR	DR	DR
120	—	20	4.5	4.5	6.5	4.5	4.5	DR	4.5	4.5	DR	4.5	DR	DR	4.5	DR	DR
		30	4.5	4.5	DR	4.5	4.5	DR	4.5	6.5	DR	4.5	DR	DR	DR	DR	DR
		50	4.5	4.5	DR	4.5	DR	DR	4.5	DR	DR	DR	DR	DR	DR	DR	DR
		70	4.5	DR	DR	4.5	DR	DR	DR	DR	DR	DR	DR	DR	DR	DR	DR
130	110	20	4.5	6.5	DR	4.5	DR	DR	4.5	DR	DR	DR	DR	DR	DR	DR	DR
		30	4.5	DR	DR	4.5	DR	DR	DR	DR	DR	DR	DR	DR	DR	DR	DR
		50	4.5	DR	DR	DR	DR	DR	DR	DR	DR	DR	DR	DR	DR	DR	DR
		70	DR	DR	DR	DR	DR	DR	DR	DR	DR	DR	DR	DR	DR	DR	DR

For SI: 1 inch = 25.4 mm, 1 foot = 304.8 mm, 1 pound per square foot = 0.0479 kPa, 1 mile per hour = 0.447 m/s.
DR = Design Required.

a. Design assumptions:
Maximum deflection criteria: $L/240$.
Maximum roof dead load: 10 psf.
Maximum roof live load: 70 psf.
Maximum ceiling dead load: 5 psf.
Maximum ceiling live load: 20 psf.
Maximum second-floor dead load: 10 psf.
Maximum second-floor live load: 30 psf.
Maximum second-floor dead load from walls: 10 psf.
Maximum first-floor dead load: 10 psf.
Maximum first-floor live load: 40 psf.
Wind loads based on Table R301.2 (2).
Strength axis of facing material applied vertically.

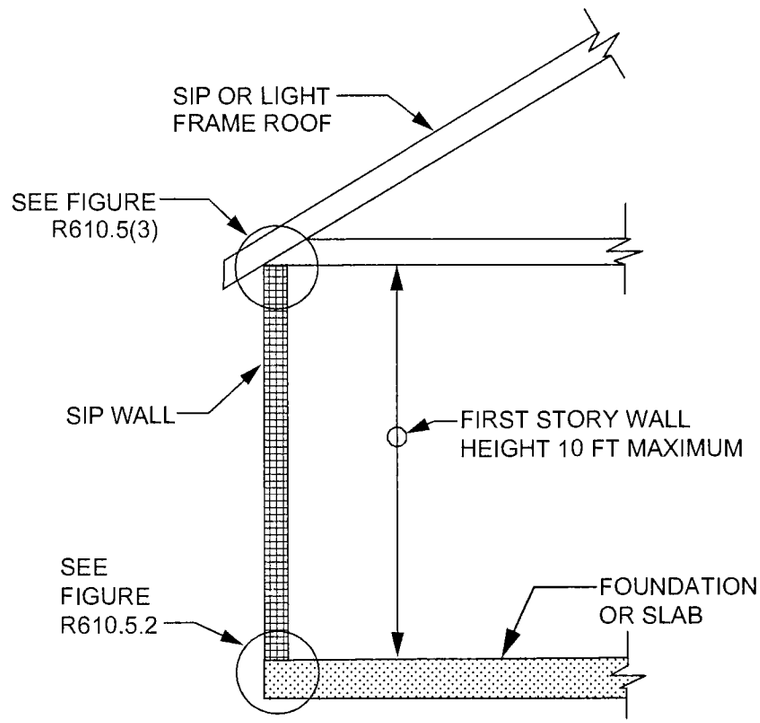

For SI: 1 foot = 304.8 mm.

Note: Figure illustrates SIP-specific attachment requirements. Other connections shall be made in accordance with Tables R602.3(1) and (2), as appropriate.

FIGURE R610.5(1)
MAXIMUM ALLOWABLE HEIGHT OF SIP WALLS

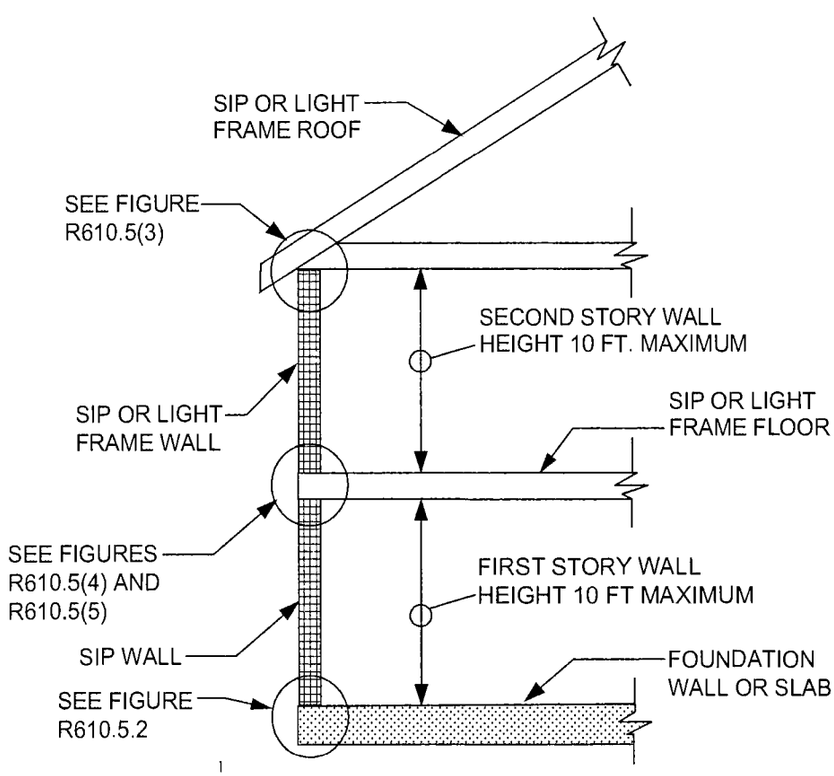

For SI: 1 foot = 304.8 mm.

Note: Figure illustrates SIP-specific attachment requirements. Other connections shall be made in accordance with Tables R602.3(1) and (2), as appropriate.

FIGURE R610.5(2)
MAXIMUM ALLOWABLE HEIGHT OF SIP WALLS

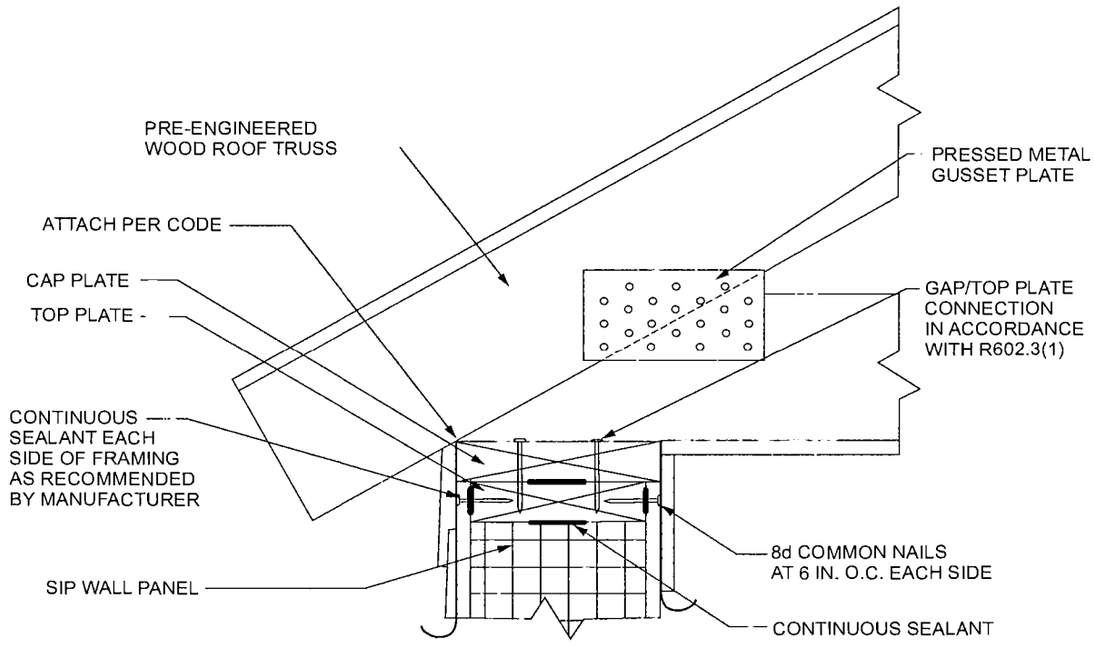

For SI: 1 inch = 25.4 mm.

Note: Figure illustrates SIP-specific attachment requirements. Other connections shall be made in accordance with Tables R602.3(1) and (2), as appropriate.

FIGURE R610.5(3)
TRUSSED ROOF TO TOP PLATE CONNECTION

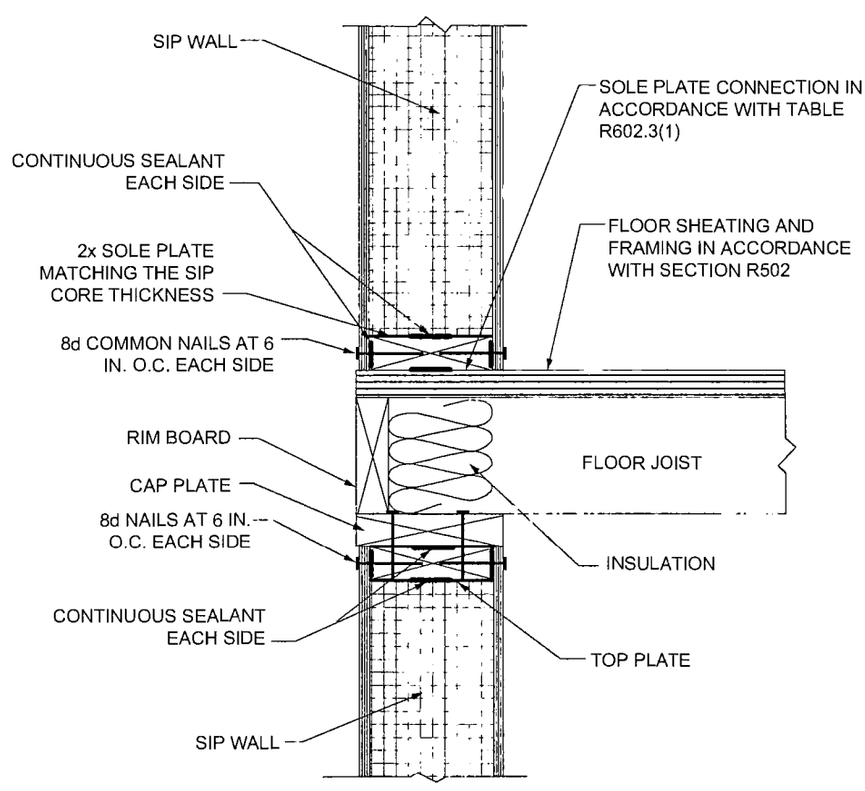

For SI: 1 inch = 25.4 mm.

Note: Figure illustrates SIP-specific attachment requirements. Other connections shall be made in accordance with Tables R602.3(1) and (2), as appropriate.

FIGURE R610.5(4)
SIP WALL-TO-WALL PLATFORM FRAME CONNECTION

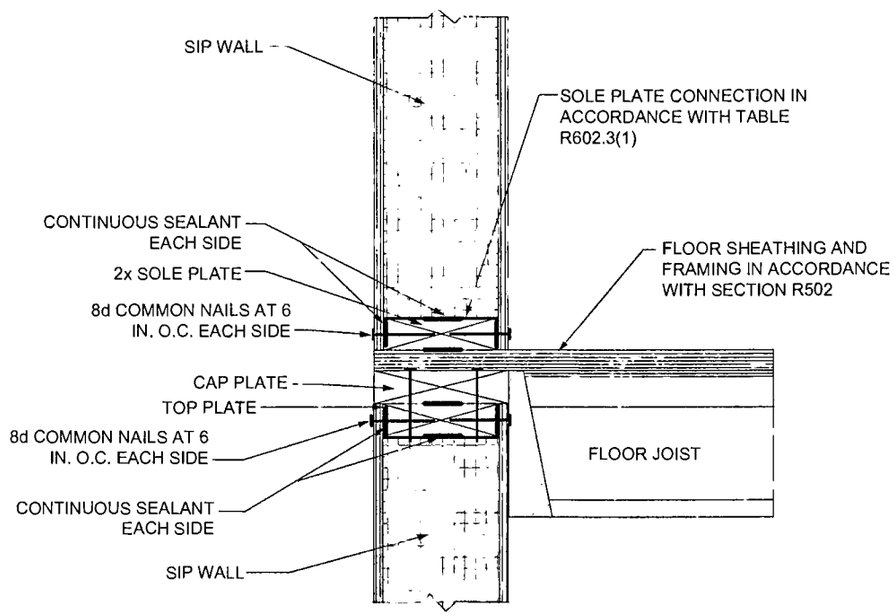

For SI: 1 inch = 25.4 mm.

Note: Figure illustrates SIP-specific attachment requirements. Other connections shall be made in accordance with Tables R602.3(1) and (2), as appropriate.

FIGURE R610.5(5)
SIP WALL-TO-WALL HANGING FLOOR FRAME CONNECTION
(I-Joist floor shown for illustration only)

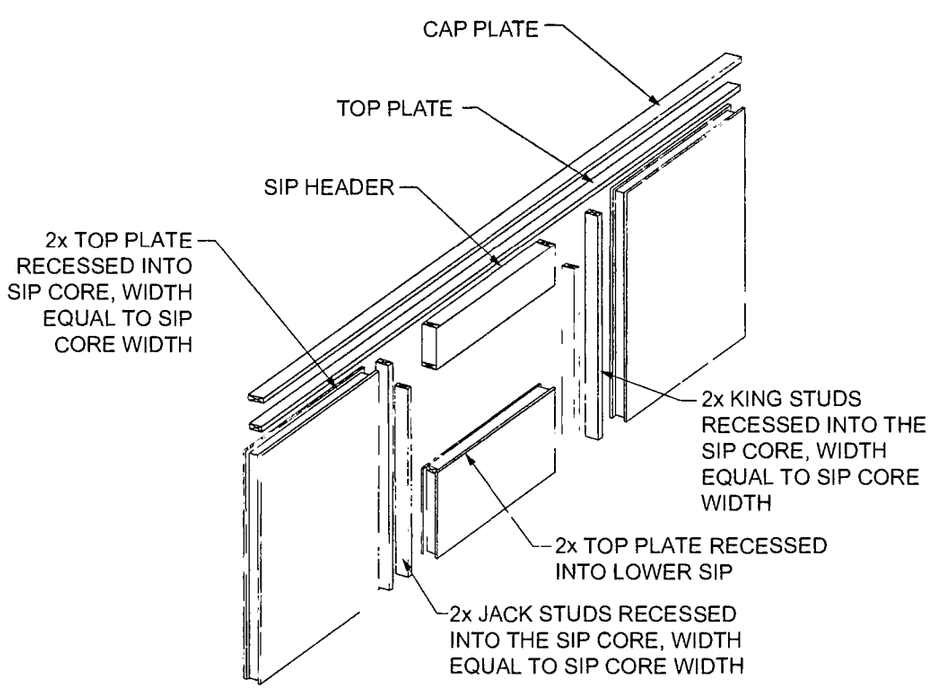

For SI: 1 inch = 25.4 mm.

Notes:

1. Top plates shall be continuous over header.
2. Lower 2x top plate shall have a width equal to the SIP core width and shall be recessed into the top edge of the panel. Cap plate shall be placed over the recessed top plate and shall have a width equal to the SIPs width.
3. SIP facing surfaces shall be nailed to framing and cripples with 8d common or galvanized box nails spaced 6 inches on center.

FIGURE R610.5.1
SIP WALL FRAMING CONFIGURATION

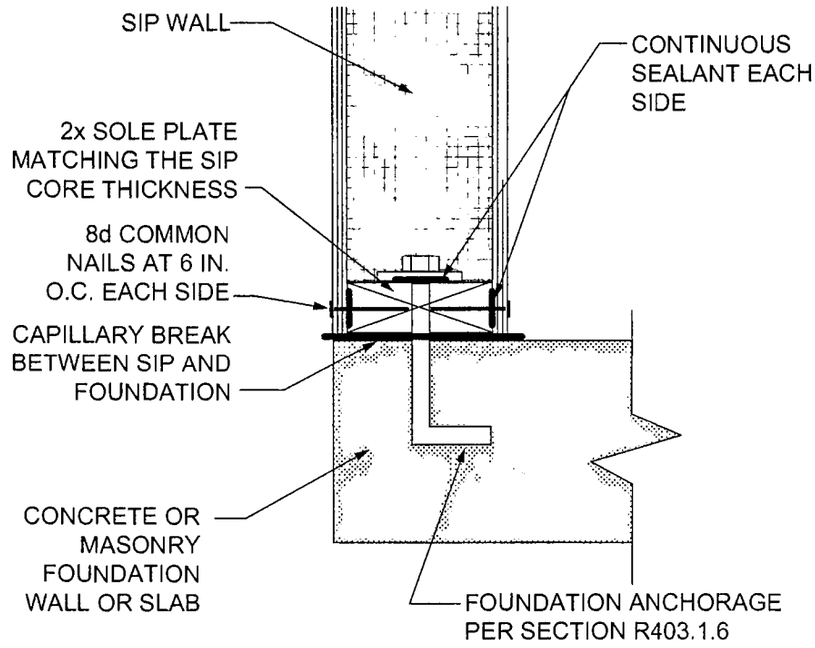

For SI: 1 inch = 25.4 mm, 1 foot = 304.8 mm.

FIGURE R610.5.2
SIP WALL TO CONCRETE SLAB FOR FOUNDATION WALL ATTACHMENT

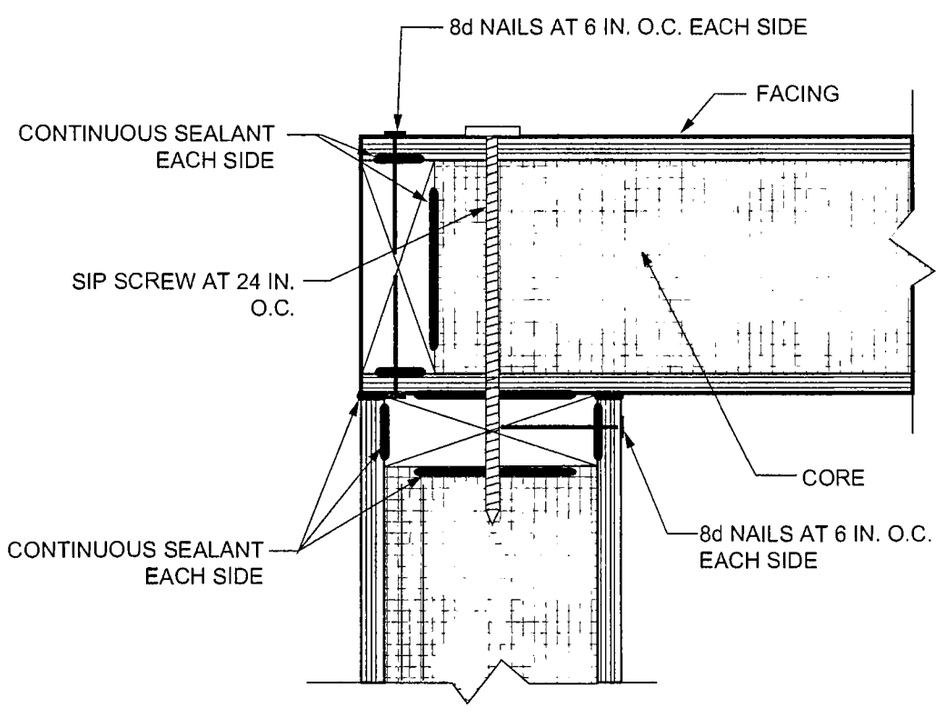

For SI: 1 inch = 25.4 mm.

FIGURE R610.5.4
SIP CORNER FRAMING DETAIL

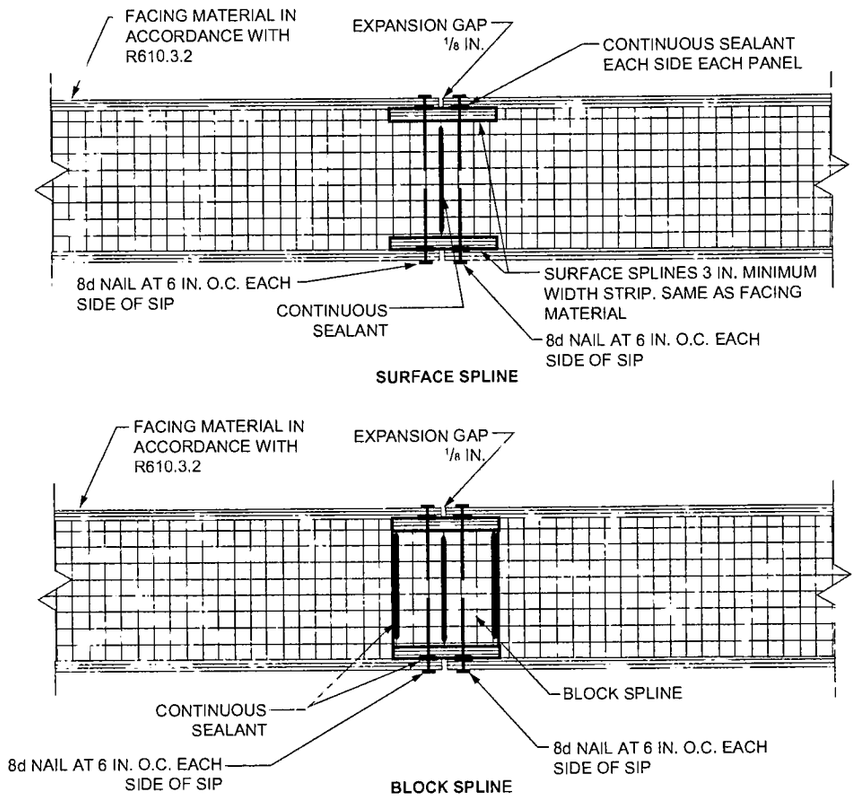

For SI: 1 inch = 25.4 mm.

FIGURE R610.8
TYPICAL SIP WALL PANEL-TO-PANEL CONNECTION DETAILS

TABLE R610.8
MAXIMUM SPANS FOR 11$^7/_8$-INCH OR DEEPER SIP HEADERS (feet)[a, c, d]

LOAD CONDITION	SNOW LOAD (psf)	BUILDING[b] width (feet)				
		24	28	32	36	40
Supporting roof only	20	4	4	4	4	2
	30	4	4	4	2	2
	50	2	2	2	2	2
	70	2	2	2	DR	DR
Supporting roof and one-story	20	2	2	DR	DR	DR
	30	2	2	DR	DR	DR
	50	2	DR	DR	DR	DR
	70	DR	DR	DR	DR	DR

For SI: 1 inch = 25.4 mm, 1 foot = 304.8 mm, 1 pound per square foot = 0.0479 kPa.
DR = Design Required.
a. Design assumptions:
Maximum deflection criterion: *L*/240.
Maximum roof dead load: 10 psf.
Maximum ceiling load: 5 psf.
Maximum ceiling live load: 20 psf
Maximum second-floor live load: 30 psf.
Maximum second-floor dead load: 10 psf.
Maximum second-floor dead load from walls: 10 psf.
Maximum first floor dead load: 10 psf.
Wind loads based on Table R301.2(2).
Strength axis of facing material applied horizontally.
b. Building width is in the direction of horizontal framing members supported by the header.
c. The table provides for roof slopes between 3:12 and 12:12.
d. The maximum roof overhang is 24 inches (610 mm).

CALIFORNIA RESIDENTIAL CODE – MATRIX ADOPTION TABLE
CHAPTER 7 – WALL COVERING

(Matrix Adoption Tables are nonregulatory, intended only as an aid to the code user.
See Chapter 1 for state agency authority and building applications.)

Adopting agency	BSC	BSC-CG	SFM	HCD			DSA			OSHPD						BSCC	DPH	AGR	DWR	CEC	CA	SL	SLC
				1	2	1/AC	AC	SS	SS/CC	1	1R	2	3	4	5								
Adopt entire chapter																							
Adopt entire chapter as amended (amended sections listed below)				X																			
Adopt only those sections that are listed below																							
Chapter / Section																							
R702.7				X																			
R702.7.1				X																			
Table R702.7.1				†																			

CHAPTER 7

WALL COVERING

User note:

About this chapter: *Chapter 7 establishes the various types of materials, materials standards and methods of application permitted as interior and exterior wall coverings. Interior coverings include interior plaster, gypsum board, ceramic tile, wood veneer paneling, hardboard paneling, wood shakes and wood shingles. Exterior wall coverings regulated by this section include aluminum, stone and masonry veneer, wood, hardboard, particleboard, wood structural panel siding, wood shakes and shingles, exterior plaster, steel, vinyl, fiber cement and exterior insulation finish systems. This chapter also contains requirements for the use of vapor retarders for moisture control in walls; wind resistance and water-resistive barriers for exterior wall coverings; and the water-resistive barrier required beneath exterior materials.*

SECTION R701
GENERAL

R701.1 Application. The provisions of this chapter shall control the design and construction of the interior and exterior wall covering for buildings.

R701.2 Installation. Products sensitive to adverse weather shall not be installed until adequate weather protection for the installation is provided. Exterior sheathing shall be dry before applying exterior cover.

SECTION R702
INTERIOR COVERING

R702.1 General. Interior coverings or wall finishes shall be installed in accordance with this chapter and Table R702.1(1), Table R702.1(2), Table R702.1(3) and Table R702.3.5. Interior masonry veneer shall comply with the requirements of Section R703.7.1 for support and Section R703.7.4 for anchorage, except an airspace is not required. Interior finishes and materials shall conform to the flame spread and smoke-development requirements of Section R302.9.

R702.2 Interior plaster.

R702.2.1 Gypsum plaster. Gypsum plaster materials shall conform to ASTM C5, C22, C28, C35, C59, C61, C587, C631, C847, C933, C1032 and C1047, and shall be installed or applied in compliance with ASTM C841, C842 and C843. Gypsum lath or gypsum base for veneer plaster shall conform to ASTM C1396 and shall be installed in compliance with ASTM C844. Plaster shall be not less than three coats where applied over metal lath and not less than two coats where applied over other bases permitted by this section, except that veneer plaster shall be applied in one coat not to exceed $^{3}/_{16}$ inch (4.76 mm) thickness, provided the total thickness is in accordance with Table R702.1(1).

TABLE R702.1(1)
THICKNESS OF PLASTER

PLASTER BASE	FINISHED THICKNESS OF PLASTER FROM FACE OF LATH, MASONRY, CONCRETE (Inches)	
	Gypsum Plaster	Cement Plaster
Expanded metal lath	$^{5}/_{8}$, minimum[a]	$^{5}/_{8}$, minimum[a]
Wire lath	$^{5}/_{8}$, minimum[a]	$^{3}/_{4}$, minimum (interior)[b] $^{7}/_{8}$, minimum (exterior)[b]
Gypsum lath[g]	$^{1}/_{2}$, minimum	$^{3}/_{4}$, minimum (interior)[b]
Masonry walls[c]	$^{1}/_{2}$, minimum	$^{1}/_{2}$, minimum
Monolithic concrete walls[c, d]	$^{5}/_{8}$, maximum	$^{7}/_{8}$, maximum
Monolithic concrete ceilings[c, d]	$^{3}/_{8}$, maximum[e]	$^{1}/_{2}$, maximum
Gypsum veneer base[f, g]	$^{1}/_{16}$, minimum	$^{3}/_{4}$, minimum (interior)[b]
Gypsum sheathing[g]	—	$^{3}/_{4}$, minimum (interior)[b] $^{7}/_{8}$, minimum (exterior)[b]

For SI: 1 inch = 25.4 mm.

a. Where measured from back plane of expanded metal lath, exclusive of ribs, or self-furring lath, plaster thickness shall be $^{3}/_{4}$ inch minimum.

b. Where measured from face of support or backing.

c. Because masonry and concrete surfaces vary in plane, thickness of plaster need not be uniform.

d. Where applied over a liquid bonding agent, finish coat shall be permitted to be applied directly to concrete surface.

e. Approved acoustical plaster shall be permitted to be applied directly to concrete or over base coat plaster, beyond the maximum plaster thickness shown.

f. Attachment shall be in accordance with Table R702.3.5.

g. Where gypsum board is used as a base for cement plaster, a water-resistive barrier complying with Section R703.2 shall be provided.

TABLE R702.1(2)
GYPSUM PLASTER PROPORTIONS[a]

NUMBER	COAT	PLASTER BASE OR LATH	MAXIMUM VOLUME AGGREGATE PER 100 POUNDS NEAT PLASTER[b] (cubic feet)	
			Damp Loose Sand[a]	Perlite or Vermiculite[c]
Two-coat work	Base coat	Gypsum lath	2.5	2
	Base coat	Masonry	3	3
Three-coat work	First coat	Lath	2[d]	2
	Second coat	Lath	3[d]	2[e]
	First and second coats	Masonry	3	3

For SI: 1 inch = 25.4 mm, 1 cubic foot = 0.0283 m^3, 1 pound = 0.454 kg.

a. Wood-fibered gypsum plaster shall be mixed in the proportions of 100 pounds of gypsum to not more than 1 cubic foot of sand where applied on masonry or concrete.

b. Where determining the amount of aggregate in set plaster, a tolerance of 10 percent shall be allowed.

c. Combinations of sand and lightweight aggregate shall be permitted to be used, provided the volume and weight relationship of the combined aggregate to gypsum plaster is maintained.

d. If used for both first and second coats, the volume of aggregate shall be permitted to be 2.5 cubic feet.

e. Where plaster is 1 inch or more in total thickness, the proportions for the second coat may be increased to 3 cubic feet.

TABLE R702.1(3)
CEMENT PLASTER PROPORTIONS, PARTS BY VOLUME

COAT	CEMENT PLASTER TYPE	CEMENTITIOUS MATERIALS				VOLUME OF AGGREGATE PER SUM OF SEPARATE VOLUMES OF CEMENTITIOUS MATERIALS[b]
		Portland Cement Type I, II or III; Blended Hydraulic Cement Type IP, I (S < 70), IL, or IT (S < 70); or Hydraulic Cement Type GU, HE, MS, HS or MH	Plastic Cement	Masonry Cement Type M, S or N	Lime	
First	Portland or blended	1	—	—	$^3/_4$ - $1^1/_2$[a]	$2^1/_2$ - 4
	Masonry	—		1	—	$2^1/_2$ - 4
	Plastic	—	1	—	—	$2^1/_2$ - 4
Second	Portland or blended	1	—	—	$^3/_4$ - $1^1/_2$	3 - 5
	Masonry	—		1	—	3 - 5
	Plastic	—	1	—	—	3 - 5
Finish	Portland or blended	1	—	—	$1^1/_2$ - 2	$1^1/_2$ - 3
	Masonry	—	—	1	—	$1^1/_2$ - 3
	Plastic	—	1		—	$1^1/_2$ - 3

For SI: 1 inch = 25.4 mm, 1 pound = 0.454 kg.

a. Lime by volume of 0 to $^3/_4$ shall be used where the plaster will be placed over low-absorption surfaces such as dense clay tile or brick.

b. The same or greater sand proportion shall be used in the second coat than used in the first coat.

R702.2.2 Cement plaster. Cement plaster materials shall conform to ASTM C91 (Type M, S or N), C150 (Types I, II and III), C595 [Types IP, I (PM), IS and I (SM), C847, C897, C933, C1032, C1047 and C1328, and shall be installed or applied in compliance with ASTM C926 and C1063. Gypsum lath shall conform to ASTM C1396. Plaster shall be not less than three coats where applied over metal lath and not less than two coats where applied over other bases permitted by this section.

R702.2.2.1 Application. Each coat shall be kept in a moist condition for not less than 24 hours prior to application of the next coat.

Exception: Applications installed in accordance with ASTM C926.

R702.2.2.2 Curing. The finish coat for two-coat cement plaster shall not be applied sooner than 48 hours after application of the first coat. For three-coat cement plaster, the second coat shall not be applied sooner than 24 hours after application of the first coat. The finish coat for three-coat cement plaster shall not be applied sooner than 48 hours after application of the second coat.

R702.2.3 Support. Support spacing for gypsum or metal lath on walls or ceilings shall not exceed 16 inches (406 mm) for $^3/_8$-inch-thick (9.5 mm) or 24 inches (610 mm) for $^1/_2$-inch-thick (12.7 mm) plain gypsum lath. Gypsum lath shall be installed at right angles to support framing with end joints in adjacent courses staggered by not less than one framing space.

R702.3 Gypsum board and gypsum panel products.

R702.3.1 Materials. Gypsum board and gypsum panel product materials and accessories shall conform to ASTM C22, C475, C514, C1002, C1047, C1177, C1178, C1278, C1396, C1658 or C1766 and shall be installed in accordance with the provisions of this section. Adhesives for the installation of gypsum board and gypsum panel products shall conform to ASTM C557.

R702.3.1.1 Adhesives. Expandable foam adhesives for the installation of gypsum board and gypsum panel products shall conform to ASTM C6464. Other adhesives for the installation of gypsum board and gypsum panel products shall conform to ASTM C557. Supports and fasteners used to attach gypsum board and gypsum panel products shall comply with Table R702.3.5 or other approved method.

R702.3.2 Wood framing. Wood framing supporting gypsum board and gypsum panel products shall be not less than 2 inches (51 mm) nominal thickness in the least dimension except that wood furring strips not less than 1-inch by 2-inch (25 mm by 51 mm) nominal dimension shall be permitted to be used over solid backing or framing spaced not more than 24 inches (610 mm) on center.

R702.3.3 Cold-formed steel framing. Cold-formed steel framing supporting gypsum board and gypsum panel products shall be not less than $1^1/_4$ inches (32 mm) wide in the least dimension. Nonload-bearing cold-formed steel framing shall comply with AISI S220. Load-bearing cold-formed steel framing shall comply with AISI S240.

R702.3.4 Insulating concrete form walls. Foam plastics for insulating concrete form walls constructed in accordance with Sections R404.1.2 and R608 on the interior of habitable spaces shall be protected in accordance with Section R316.4. Use of adhesives in conjunction with mechanical fasteners is permitted. Adhesives used for interior and exterior finishes shall be compatible with the insulating form materials.

R702.3.5 Application. Supports and fasteners used to attach gypsum board and gypsum panel products shall comply with Table R702.3.5. Gypsum sheathing shall be attached to exterior walls in accordance with Table R602.3(1). Gypsum board and gypsum panel products shall be applied at right angles or parallel to framing members. All edges and ends of gypsum board and gypsum panel products shall occur on the framing members, except those edges and ends that are perpendicular to the framing members. Interior gypsum board shall not be installed where it is directly exposed to the weather or to water.

R702.3.5.1 Screw fastening. Screws for attaching gypsum board and gypsum panel products to wood framing shall be Type W or Type S in accordance with ASTM C1002 and shall penetrate the wood not less than $^5/_8$ inch (15.9 mm). Gypsum board and gypsum panel products shall be attached to cold-formed steel framing with minimum No. 6 screws. Screws for attaching gypsum board and gypsum panel products to cold-formed steel framing less than 0.033 inch (1 mm) thick shall be Type S in accordance with ASTM C1002 or bugle head style in accordance with ASTM C1513 and shall penetrate the steel not less than $^3/_8$ inch (9.5 mm). Screws for attaching gypsum board and gypsum panel products to cold-formed steel framing 0.033 inch to 0.112 inch (1 mm to 3 mm) thick shall be in accordance with ASTM C954 or bugle head style in accordance with ASTM C1513. Screws for attaching gypsum board and gypsum panel products to structural insulated panels shall penetrate the wood structural panel facing not less than $^7/_{16}$ inch (11.1 mm).

R702.3.6 Horizontal gypsum board diaphragm ceilings. Gypsum board and gypsum panel products shall be permitted on wood joists to create a horizontal diaphragm in accordance with Table R702.3.6. Gypsum board and gypsum panel products shall be installed perpendicular to ceiling framing members. End joints of adjacent courses of board and panels shall not occur on the same joist. The maximum allowable diaphragm proportions shall be $1^1/_2$:1 between shear resisting elements. Rotation or cantilever conditions shall not be permitted. Gypsum board or gypsum panel products shall not be used in diaphragm ceilings to resist lateral forces imposed by masonry or concrete construction. Perimeter edges shall be blocked using wood members not less than 2-inch by 6-inch (51 mm by 152 mm) nominal dimension. Blocking material shall be installed flat over the top plate of the wall to provide a nailing surface not less than 2 inches (51 mm) in width for the attachment of the gypsum board or gypsum panel product.

R702.3.7 Water-resistant gypsum backing board. Gypsum board used as the base or backer for adhesive application of ceramic tile or other required nonabsorbent finish material shall conform to ASTM C1178, C1278 or C1396. Use of water-resistant gypsum backing board shall be permitted on ceilings. Water-resistant gypsum board shall not be installed over a Class I or II vapor retarder in a shower or tub compartment. Cut or exposed edges, including those at wall intersections, shall be sealed as recommended by the manufacturer.

R702.3.7.1 Limitations. Water-resistant gypsum backing board shall not be used where there will be direct exposure to water, or in areas subject to continuous high humidity.

R702.4 Ceramic tile.

R702.4.1 General. Ceramic tile surfaces shall be installed in accordance with ANSI A108.1, A108.4, A108.5, A108.6, A108.11, A118.1, A118.3, A136.1 and A137.1.

R702.4.2 Backer boards. Materials used as backers for wall tile in tub and shower areas and wall panels in shower areas shall be of materials listed in Table R702.4.2, and installed in accordance with the manufacturer's recommendations.

TABLE R702.3.5
MINIMUM THICKNESS AND APPLICATION OF GYPSUM BOARD AND GYPSUM PANEL PRODUCTS

THICKNESS OF GYPSUM BOARD OR GYPSUM PANEL PRODUCTS (Inches)	APPLICATION	ORIENTATION OF GYPSUM BOARD OR GYPSUM PANEL PRODUCTS TO FRAMING	MAXIMUM SPACING OF FRAMING MEMBERS (Inches o.c.)	MAXIMUM SPACING OF FASTENERS (Inches)		SIZE OF NAILS FOR APPLICATION TO WOOD FRAMING[c]
				Nails[a]	Screws[b]	
Application without adhesive						
$^3/_8$	Ceiling[d]	Perpendicular	16	7	12	13 gage, $1^1/_4$″ long, $^{19}/_{64}$″ head; 0.098″ diameter, $1^1/_4$″ long, annular-ringed; or 4d cooler nail, 0.080″ diameter, $1^3/_8$″ long, $^7/_{32}$″ head.
	Wall	Either direction	16	8	16	
$^1/_2$	Ceiling	Either direction	16	7	12	13 gage, $1^3/_8$″ long, $^{19}/_{64}$″ head; 0.098″ diameter, $1^1/_4$″ long, annular-ringed; 5d cooler nail, 0.086″ diameter, $1^5/_8$″ long, $^{15}/_{64}$″ head; or gypsum board nail, 0.086″ diameter, $1^5/_8$″ long, $^9/_{32}$″ head.
	Ceiling[d]	Perpendicular	24	7	12	
	Wall	Either direction	24	8	12	
	Wall	Either direction	16	8	16	
$^5/_8$	Ceiling	Either direction	16	7	12	13 gage, $1^5/_8$″ long, $^{19}/_{64}$″ head; 0.098″ diameter, $1^3/_8$″ long, annular-ringed; 6d cooler nail, 0.092″ diameter, $1^7/_8$″ long, $^1/_4$″ head; or gypsum board nail, 0.0915″ diameter, $1^7/_8$″ long, $^{19}/_{64}$″ head.
	Ceiling	Perpendicular	24	7	12	
	Type X at garage ceiling beneath habitable rooms	Perpendicular	24	6	6	$1^7/_8$″ long 6d coated nails or equivalent drywall screws. Screws shall comply with Section R702.3.5.1
	Wall	Either direction	24	8	12	13 gage, $1^5/_8$″ long, $^{19}/_{64}$″ head; 0.098″ diameter, $1^3/_8$″ long, annular-ringed; 6d cooler nail, 0.092″ diameter, $1^7/_8$″ long, $^1/_4$″ head; or gypsum board nail, 0.0915″ diameter, $1^7/_8$″ long, $^{19}/_{64}$″ head.
	Wall	Either direction	16	8	16	
Application with adhesive						
$^3/_8$	Ceiling[d]	Perpendicular	16	16	16	Same as above for $^3/_8$″ gypsum board and gypsum panel products.
	Wall	Either direction	16	16	24	
$^1/_2$ or $^5/_8$	Ceiling	Either direction	16	16	16	Same as above for $^1/_2$″ and $^5/_8$″ gypsum board and gypsum panel products, respectively.
	Ceiling[d]	Perpendicular	24	12	16	
	Wall	Either direction	24	16	24	
Two $^3/_8$ layers	Ceiling	Perpendicular	16	16	16	Base ply nailed as above for $^1/_2$″ gypsum board and gypsum panel products; face ply installed with adhesive.
	Wall	Either direction	24	24	24	

For SI: 1 inch = 25.4 mm.

a. For application without adhesive, a pair of nails spaced not less than 2 inches apart or more than $2^1/_2$ inches apart shall be permitted to be used with the pair of nails spaced 12 inches on center.

b. Screws shall be in accordance with Section R702.3.5.1. Screws for attaching gypsum board or gypsum panel products to structural insulated panels shall penetrate the wood structural panel facing not less than $^7/_{16}$ inch.

c. Where cold-formed steel framing is used with a clinching design to receive nails by two edges of metal, the nails shall be not less than $^5/_8$ inch longer than the gypsum board or gypsum panel product thickness and shall have ringed shanks. Where the cold-formed steel framing has a nailing groove formed to receive the nails, the nails shall have barbed shanks or be 5d, $13^1/_2$ gage, $1^5/_8$ inches long, $^{15}/_{64}$-inch head for $^1/_2$-inch gypsum board or gypsum panel product; and 6d, 13 gage, $1^7/_8$ inches long, $^{15}/_{64}$-inch head for $^5/_8$-inch gypsum board or gypsum panel product.

d. Three-eighths-inch-thick single-ply gypsum board or gypsum panel product shall not be used on a ceiling where a water-based textured finish is to be applied, or where it will be required to support insulation above a ceiling. On ceiling applications to receive a water-based texture material, either hand or spray applied, the gypsum board or gypsum panel product shall be applied perpendicular to framing. Where applying a water-based texture material, the minimum gypsum board thickness shall be increased from $^3/_8$ inch to $^1/_2$ inch for 16-inch on center framing, and from $^1/_2$ inch to $^5/_8$ inch for 24-inch on center framing or $^1/_2$-inch sag-resistant gypsum ceiling board shall be used.

TABLE R702.3.6
SHEAR CAPACITY FOR HORIZONTAL WOOD-FRAMED GYPSUM BOARD DIAPHRAGM CEILING ASSEMBLIES

MATERIAL	THICKNESS OF MATERIAL (min.) (inch)	SPACING OF FRAMING MEMBERS (max.) (inch)	SHEAR VALUE[a, b] (plf of ceiling)	MINIMUM FASTENER SIZE[c, d]
Gypsum board or gypsum panel product	$^1/_2$	16 o.c.	90	5d cooler or wallboard nail; $1^5/_8$-inch long; 0.086-inch shank; $^{15}/_{64}$-inch head
Gypsum board or gypsum panel product	$^1/_2$	24 o.c.	70	5d cooler or wallboard nail; $1^5/_8$-inch long; 0.086-inch shank; $^{15}/_{64}$-inch head

For SI: 1 inch = 25.4 mm, 1 pound per linear foot = 1.488 kg/m.

a. Values are not cumulative with other horizontal diaphragm values and are for short-term loading caused by wind or seismic loading. Values shall be reduced 25 percent for normal loading.

b. Values shall be reduced 50 percent in Seismic Design Categories D_0, D_1, D_2 and E.

c. $1^1/_4$-inch, No. 6 Type S or W screws shall be permitted to be substituted for the listed nails.

d. Fasteners shall be spaced not more than 7 inches on center at all supports, including perimeter blocking, and not less than $^3/_8$ inch from the edges and ends of the gypsum board.

TABLE R702.4.2
BACKER BOARD MATERIALS

MATERIAL	STANDARD
Glass mat gypsum backing panel	ASTM C1178
Fiber-reinforced gypsum panels	ASTM C1278
Nonasbestos fiber-cement backer board	ASTM C1288 or ISO 8336, Category C
Nonasbestos fiber mat-reinforced cementitious backer units	ASTM C1325

R702.5 Other finishes. Wood veneer paneling and hardboard paneling shall be placed on wood or cold-formed steel framing spaced not more than 16 inches (406 mm) on center. Wood veneer and hard board paneling less than $^1/_4$-inch (6 mm) nominal thickness shall not have less than a $^3/_8$-inch (10 mm) gypsum board or gypsum panel product backer. Wood veneer paneling not less than $^1/_4$-inch (6 mm) nominal thickness shall conform to ANSI/HPVA HP-1. Hardboard paneling shall conform to CPA/ANSI A135.5.

R702.6 Wood shakes and shingles. Wood shakes and shingles shall conform to CSSB *Grading Rules for Wood Shakes and Shingles* and shall be permitted to be installed directly to the studs with maximum 24 inches (610 mm) on-center spacing.

R702.6.1 Attachment. Nails, staples or glue are permitted for attaching shakes or shingles to the wall, and attachment of the shakes or shingles directly to the surface shall be permitted provided the fasteners are appropriate for the type of wall surface material. Where nails or staples are used, two fasteners shall be provided and shall be placed so that they are covered by the course above.

R702.6.2 Furring strips. Where furring strips are used, they shall be 1 inch by 2 inches or 1 inch by 3 inches (25 mm by 51 mm or 25 mm by 76 mm), spaced a distance on center equal to the desired exposure, and shall be attached to the wall by nailing through other wall material into the studs.

R702.7 Vapor retarders. Class I or II vapor retarders are required on the interior side of frame walls in Climate Zones *14 and 16. See the California Energy Code, Figure 100.1-A —California Climate Zones.*

Exceptions:

1. Basement walls.
2. Below-grade portion of any wall.
3. Construction where moisture or its freezing will not damage the materials.

R702.7.1 Class III vapor retarders. Class III vapor retarders shall be permitted where any one of *the following materials are used. The material options include vented cladding over fiberboard, vented cladding over gypsum, or insulated sheathing with an R-value equal to or greater than R-4. If insulated sheathing is used the R-value shall be included as part of the compliance toward the California Energy Code.*

Spray foam with a minimum density of 2 lb/ft^3 applied to the interior cavity side of OSB, plywood, fiberboard, insulated sheathing or gypsum is deemed to meet the insulated sheathing requirement where the spray foam R-value meets or exceeds the specified insulated sheathing R-value.

R702.7.2 Material vapor retarder class. The vapor retarder class shall be based on the manufacturer's certified testing or a tested assembly.

The following shall be deemed to meet the class specified:

1. Class I: Sheet polyethylene, on perforated aluminum foil.
2. Class II: Kraft-faced fiberglass batts.
3. Class III: Latex or enamel paint.

R702.7.3 Minimum clear airspaces and vented openings for vented cladding. For the purposes of this section, vented cladding shall include the following minimum clear airspaces. Other openings with the equivalent vent area shall be permitted.

1. Vinyl polypropylene or horizontal aluminum siding applied over a weather-resistive barrier as specified in Table R703.3(1).

2. Brick veneer with a clear airspace as specified in Table R703.8.4.
3. Other approved vented claddings.

SECTION R703
EXTERIOR COVERING

R703.1 General. Exterior walls shall provide the building with a weather-resistant exterior wall envelope. The exterior wall envelope shall include flashing as described in Section R703.4.

Exception: Log walls designed and constructed in accordance with the provisions of ICC 400.

R703.1.1 Water resistance. The exterior wall envelope shall be designed and constructed in a manner that prevents the accumulation of water within the wall assembly by providing a water-resistant barrier behind the exterior cladding as required by Section R703.2 and a means of draining to the exterior water that penetrates the exterior cladding.

Exceptions:

1. A weather-resistant exterior wall envelope shall not be required over concrete or masonry walls designed in accordance with Chapter 6 and flashed in accordance with Section R703.4 or R703.8.
2. Compliance with the requirements for a means of drainage, and the requirements of Sections R703.2 and R703.4, shall not be required for an exterior wall envelope that has been demonstrated to resist wind-driven rain through testing of the exterior wall envelope, including joints, penetrations and intersections with dissimilar materials, in accordance with ASTM E331 under the following conditions:
   - 2.1. Exterior wall envelope test assemblies shall include at least one opening, one control joint, one wall/eave interface and one wall sill. All tested openings and penetrations shall be representative of the intended end-use configuration.
   - 2.2. Exterior wall envelope test assemblies shall be at least 4 feet by 8 feet (1219 mm by 2438 mm) in size.
   - 2.3. Exterior wall assemblies shall be tested at a minimum differential pressure of 6.24 pounds per square foot (299 Pa).
   - 2.4. Exterior wall envelope assemblies shall be subjected to the minimum test exposure for a minimum of 2 hours.

   The exterior wall envelope design shall be considered to resist wind-driven rain where the results of testing indicate that water did not penetrate control joints in the exterior wall envelope, joints at the perimeter of openings penetration or intersections of terminations with dissimilar materials.

R703.1.2 Wind resistance. Wall coverings, backing materials and their attachments shall be capable of resisting wind loads in accordance with Tables R301.2(2) and R301.2(3). Wind-pressure resistance of the siding, soffit and backing materials shall be determined by ASTM E330 or other applicable standard test methods. Where wind-pressure resistance is determined by design analysis, data from approved design standards and analysis conforming to generally accepted engineering practice shall be used to evaluate the siding, soffit and backing material and its fastening. All applicable failure modes including bending rupture of siding, fastener withdrawal and fastener head pull-through shall be considered in the testing or design analysis. Where the wall covering, soffit and backing material resist wind load as an assembly, use of the design capacity of the assembly shall be permitted.

R703.2 Water-resistive barrier. One layer of No. 15 asphalt felt, free from holes and breaks, complying with ASTM D226 for Type 1 felt or other approved water-resistive barrier shall be applied over studs or sheathing of all exterior walls. No.15 asphalt felt shall be applied horizontally, with the upper layer lapped over the lower layer not less than 2 inches (51 mm). Where joints occur, felt shall be lapped not less than 6 inches (152 mm). Other approved materials shall be installed in accordance with the water-resistive barrier manufacturer's installation instructions. The No. 15 asphalt felt or other approved water-resistive barrier material shall be continuous to the top of walls and terminated at penetrations and building appendages in a manner to meet the requirements of the exterior wall envelope as described in Section R703.1.

R703.3 Wall covering nominal thickness and attachments. The nominal thickness and attachment of exterior wall coverings shall be in accordance with Table R703.3(1), the wall covering material requirements of this section, and the wall covering manufacturer's installation instructions. Cladding attachment over foam sheathing shall comply with the additional requirements and limitations of Sections R703.15 through R703.17. Nominal material thicknesses in Table R703.3(1) are based on a maximum stud spacing of 16 inches (406 mm) on center. Where specified by the siding manufacturer's instructions and supported by a test report or other documentation, attachment to studs with greater spacing is permitted. Fasteners for exterior wall coverings attached to wood framing shall be in accordance with Section R703.3.3 and Table R703.3(1). Exterior wall coverings shall be attached to cold-formed steel light frame construction in accordance with the cladding manufacturer's installation instructions, the requirements of Table R703.3(1) using screw fasteners substituted for the nails specified in accordance with Table R703.3(2), or an approved design.

TABLE R703.3(1)
SIDING MINIMUM ATTACHMENT AND MINIMUM THICKNESS

SIDING MATERIAL		NOMINAL THICKNESS (inches)	JOINT TREATMENT	TYPE OF SUPPORTS FOR THE SIDING MATERIAL AND FASTENERS					
				Wood or wood structural panel sheathing into stud	Fiberboard sheathing into stud	Gypsum sheathing into stud	Foam plastic sheathing into stud[l]	Direct to studs	Number or spacing of fasteners
Anchored veneer: brick, concrete, masonry or stone (see Section R703.8)		2	Section R703.8	Section R703.8					
Adhered veneer: concrete, stone or masonry (see Section R703.12)		—	Section R703.12	Section R703.12					
Fiber cement siding	Panel siding (see Section R703.10.1)	$^5/_{16}$	Section R703.10.1	6d common (2″ × 0.113″)	6d common (2″ × 0.113″)	6d common (2″ × 0.113″)	6d common (2″ × 0.113″)	4d common ($1^1/_2$″ × 0.099″)	6″ panel edges 12″ inter. sup.
	Lap siding (see Section R703.10.2)	$^5/_{16}$	Section R703.10.2	6d common (2″ × 0.113″)	6d common (2″ × 0.113″)	6d common (2″ × 0.113″)	6d common (2″ × 0.113″)	6d common (2″ × 0.113″) or 11 gage roofing nail	Note f
Hardboard panel siding (see Section R703.5)		$^7/_{16}$	—	0.120″ nail (shank) with 0.225″ head	0.120″ nail (shank) with 0.225″ head	0.120″ nail (shank) with 0.225″ head	0.120″ nail (shank) with 0.225″ head	0.120″ nail (shank) with 0.225″ head	6″ panel edges 12″ inter. sup.[d]
Hardboard lap siding (see Section R703.5)		$^7/_{16}$	Note e	0.099″ nail (shank) with 0.240″ head	0.099″ nail (shank) with 0.240″ head	0.099″ nail (shank) with 0.240″ head	0.099″ nail (shank) with 0.240″ head	0.099″ nail (shank) with 0.240″ head	Same as stud spacing 2 per bearing
Horizontal aluminum[a]	Without insulation	0.019[b]	Lap	Siding nail $1^1/_2$″ × 0.120″	Siding nail 2″ × 0.120″	Siding nail 2″ × 0.120″	Siding nail[h] $1^1/_2$″ × 0.120″	Not allowed	Same as stud spacing
		0.024	Lap	Siding nail $1^1/_2$″ × 0.120″	Siding nail 2″ × 0.120″	Siding nail 2″ × 0.120″	Siding nail[h] $1^1/_2$″ × 0.120″	Not allowed	
	With insulation	0.019	Lap	Siding nail $1^1/_2$″ × 0.120″	Siding nail $2^1/_2$″ × 0.120″	Siding nail $2^1/_2$″ × 0.120″	Siding nail[h] $1^1/_2$″ × 0.120″	Siding nail $1^1/_2$″ × 0.120″	
Insulated vinyl siding[j]		0.035 (vinyl siding layer only)	Lap	0.120 nail (shank) with a 0.313 head or 16-gage crown[h,i]	0.120 nail (shank) with a 0.313 head or 16-gage crown[h]	0.120 nail (shank) with a 0.313 head or 16-gage crown[h]	0.120 nail (shank) with a 0.313 head Section R703.11.2	Not allowed	16 inches on center or specified by manufacturer instructions, test report or other sections of this code
Particleboard panels		$^3/_8$	—	6d box nail (2″ × 0.099″)	6d box nail (2″ × 0.099″)	6d box nail (2″ × 0.099″)	6d box nail (2″ × 0.099″)	Not allowed	6″ panel edges 12″ inter. sup.
		$^1/_2$	—	6d box nail (2″ × 0.099″)	6d box nail (2″ × 0.099″)	6d box nail (2″ × 0.099″)	6d box nail (2″ × 0.099″)	6d box nail (2″ × 0.099″)	
		$^5/_8$	—	6d box nail (2″ × 0.099″)	8d box nail ($2^1/_2$″ × 0.113″)	8d box nail ($2^1/_2$″ × 0.113″)	6d box nail (2″ × 0.099″)	6d box nail (2″ × 0.099″)	
Polypropylene siding[k]		Not applicable	Lap	Section 703.14.1	Section 703.14.1	Section 703.14.1	Section 703.14.1	Not allowed	As specified by the manufacturer instructions, test report or other sections of this code

(continued)

TABLE R703.3(1)—continued
SIDING MINIMUM ATTACHMENT AND MINIMUM THICKNESS

SIDING MATERIAL		NOMINAL THICKNESS (Inches)	JOINT TREATMENT	TYPE OF SUPPORTS FOR THE SIDING MATERIAL AND FASTENERS					
				Wood or wood structural panel sheathing into stud	Fiberboard sheathing into stud	Gypsum sheathing into stud	Foam plastic sheathing into stud[l]	Direct to studs	Number or spacing of fasteners
Steel[c]		29 ga.	Lap	Siding nail ($1^3/_4$" × 0.113") Staple–$1^3/_4$"	Siding nail ($2^3/_4$" × 0.113") Staple–$2^1/_2$"	Siding nail ($2^1/_2$" × 0.113") Staple–$2^1/_4$"	Siding nail ($1^3/_4$" x 0.113") Staple–$1^3/_4$"	Not allowed	Same as stud spacing
Vinyl siding (see Section R703.11)		0.035	Lap	0.120" nail (shank) with a 0.313" head or 16-gage staple with $^3/_8$- to $^1/_2$-inch crown[h, i]	0.120" nail (shank) with a 0.313" head or 16-gage staple with $^3/_8$- to $^1/_2$-inch crown[h]	0.120" nail (shank) with a 0.313" head or 16- gage staple with $^3/_8$- to $^1/_2$-inch crown[h]	0.120" nail (shank) with a 0.313 head Section R703.11.2	Not allowed	16 inches on center or as specified by the manufacturer instructions or test report
Wood siding (see Section R703.5)	Wood rustic, drop	$^3/_8$ min.	Lap	6d box or siding nail (2" × 0.099")	6d box or siding nail (2" × 0.099")	6d box or siding nail (2" × 0.099")	6d box or siding nail (2" × 0.099")	8d box or siding nail ($2^1/_2$" × 0.113") Staple–2"	Face nailing up to 6" widths, 1 nail per bearing; 8" widths and over, 2 nails per bearing
	Shiplap	$^{19}/_{32}$ average	Lap						
	Bevel	$^7/_{16}$							
	Butt tip	$^3/_{16}$	Lap						
Wood structural panel ANSI/APA PRP-210 siding (exterior grade) (see Section R703.5)		$^3/_8 - ^1/_2$	Note e	2" × 0.099" siding nail	$2^1/_2$" × 0.113" siding nail	$2^1/_2$" × 0.113" siding nail	$2^1/_2$" × 0.113" siding nail	2" × 0.099" siding nail	6" panel edges 12" inter. sup.
Wood structural panel lap siding (see Section R703.5)		$^3/_8 - ^1/_2$	Note e Note g	2" × 0.099" siding nail	$2^1/_2$" × 0.113" siding nail	$2^1/_2$" × 0.113" siding nail	$2^1/_2$" × 0.113" siding nail	2" × 0.099" siding nail	8" along bottom edge

For SI: 1 inch = 25.4 mm.

a. Aluminum nails shall be used to attach aluminum siding.
b. Aluminum (0.019 inch) shall be unbacked only where the maximum panel width is 10 inches and the maximum flat area is 8 inches. The tolerance for aluminum siding shall be +0.002 inch of the nominal dimension.
c. Shall be of approved type.
d. Where used to resist shear forces, the spacing must be 4 inches at panel edges and 8 inches on interior supports.
e. Vertical end joints shall occur at studs and shall be covered with a joint cover or shall be caulked.
f. Face nailing: one 6d common nail through the overlapping planks at each stud. Concealed nailing: one 11-gage $1^1/_2$-inch-long galv. roofing nail through the top edge of each plank at each stud in accordance with the manufacturer's installation instructions.
g. Vertical joints, if staggered, shall be permitted to be away from studs if applied over wood structural panel sheathing.
h. Minimum fastener length must be sufficient to penetrate sheathing other nailable substrate and framing a total of a minimum of $1^1/_4$ inches or in accordance with the manufacturer's installation instructions.
i. Where specified by the manufacturer's instructions and supported by a test report, fasteners are permitted to penetrate into or fully through nailable sheathing or other nailable substrate of minimum thickness specified by the instructions or test report, without penetrating into framing.
j. Insulated vinyl siding shall comply with ASTM D7793.
k. Polypropylene siding shall comply with ASTM D7254.
l. Cladding attachment over foam sheathing shall comply with the additional requirements and limitations of Sections R703.15, R703.16 and R703.17.

TABLE R703.3(2)
SCREW FASTENER SUBSTITUTION FOR SIDING ATTACHMENT TO COLD-FORMED STEEL LIGHT FRAME CONSTRUCTION[a, b, c, d, e]

NAIL DIAMETER PER TABLE R703.3(1)	MINIMUM SCREW FASTENER SIZE
0.099″	No. 6
0.113″	No. 7
0.120″	No. 8

For SI: 1 inch = 25.4 mm

a. Screws shall comply with ASTM C1513 and shall penetrate a minimum of three threads through minimum 33 mil (20 gage) cold-formed steel frame construction.

b. Screw head diameter shall be not less than the nail head diameter required by Table R703.3(1).

c. Number and spacing of screw fasteners shall comply with Table R703.3(1).

d. Pan head, hex washer head, modified truss head or other screw head types with a flat attachment surface under the head shall be used for vinyl siding attachment.

e. Aluminum siding shall not be fastened directly to cold-formed steel light frame construction.

R703.3.1 Soffit installation. Soffits shall comply with Section R703.3.1.1, Section R703.3.1.2 or the manufacturer's installation instructions.

R703.3.1.1 Wood structural panel soffit. The minimum nominal thickness for wood structural panel soffits shall be $^3/_8$ inch (9.5 mm) and shall be fastened to framing or nailing strips with 2-inch by 0.099-inch (51 mm × 2.5 mm) nails. Fasteners shall be in spaced not less than 6 inches (152 mm) on center at panel edges and 12 inches (305 mm) on center at intermediate supports.

R703.3.1.2 Vinyl soffit panels. Soffit panels shall be fastened at fascia and wall ends and to intermediate nailing strips as necessary to ensure that there is no unsupported span greater than 16 inches (406 mm), or as specified by the manufacturer's instructions.

R703.3.2 Wind limitations. Where the design wind pressure exceeds 30 psf or where the limits of Table R703.3.2 are exceeded, the attachment of wall coverings and soffits shall be designed to resist the component and cladding loads specified in Table R301.2(2) for walls, adjusted for height and exposure in accordance with Table R301.2(3). For the determination of wall covering and soffit attachment, component and cladding loads shall be determined using an effective wind area of 10 square feet (0.93 m^2).

R703.3.3 Fasteners. Exterior wall coverings and roof overhang soffits shall be securely fastened with aluminum, galvanized, stainless steel or rust-preventative coated nails or staples in accordance with Table R703.3(1) or with other approved corrosion-resistant fasteners in accordance with the wall covering manufacturer's installation instructions. Nails and staples shall comply with ASTM F1667. Nails shall be T-head, modified round head, or round head with smooth or deformed shanks. Staples shall have a minimum crown width of $^7/_{16}$ inch (11.1 mm) outside diameter and be manufactured of minimum 16-gage wire. Where fiberboard, gypsum, or foam plastic sheathing backing is used, nails or staples shall be driven into the studs. Where wood or wood structural panel sheathing is used, fasteners shall be driven into studs unless otherwise permitted to be driven into sheathing in accordance with either the siding manufacturer's installation instructions or Table R703.3.3.

TABLE R703.3.2
LIMITS FOR ATTACHMENT PER TABLE R703.3(1)

MAXIMUM MEAN ROOF HEIGHT			
Ultimate Wind Speed (mph 3-second gust)	Exposure		
	B	C	D
115	NL	50′	20′
120	NL	30′	DR
130	60′	15′	DR
140	35′	DR	DR

For SI: 1 foot = 304.8 mm, 1 mile per hour = 0.447 m/s.
NL = Not Limited by Table R703.3.2, DR = Design Required.

R703.3.4 Minimum fastener length and penetration. Fasteners shall have the greater of the minimum length specified in Table R703.3(1) or as required to provide a minimum penetration into framing as follows:

1. Fasteners for horizontal aluminum siding, steel siding, particleboard panel siding, wood structural panel siding in accordance with ANSI/APA-PRP 210, fiber-cement panel siding and fiber-cement lap siding installed over foam plastic sheathing shall penetrate not less than $1^1/_2$ inches (38 mm) into framing or shall be in accordance with the manufacturer's installation instructions.
2. Fasteners for hardboard panel and lap siding shall penetrate not less than $1^1/_2$ inches (38 mm) into framing.
3. Fasteners for vinyl siding and insulated vinyl siding installed over wood or wood structural panel sheathing shall penetrate not less than $1^1/_4$ inches (32 mm) into sheathing and framing combined. Vinyl siding and insulated vinyl siding shall be permitted to be installed

TABLE R703.3.3
OPTIONAL SIDING ATTACHMENT SCHEDULE FOR FASTENERS WHERE NO STUD PENETRATION NECESSARY

APPLICATION	NUMBER AND TYPE OF FASTENER	SPACING OF FASTENERS[b]
Exterior wall covering (weighing 3 psf or less) attachment to wood structural panel sheathing, either direct or over foam sheathing a maximum of 2 inches thick.[a] Note: Does not apply to vertical siding.	Ring shank roofing nail (0.120″ min. dia.)	12″ o.c.
	Ring shank nail (0.148″ min. dia.)	15″ o.c.
	No. 6 screw (0.138″ min. dia.)	12″ o.c.
	No. 8 screw (0.164″ min. dia.)	16″ o.c.

For SI: 1 inch = 25.4 mm, 1 pound per square foot = 0.479 kPa.

a. Fastener length shall be sufficient to penetrate the back side of the wood structural panel sheathing by at least $^1/_4$ inch. The wood structural panel sheathing shall be not less than $^7/_{16}$ inch in thickness.

b. Spacing of fasteners is per 12 inches of siding width. For other siding widths, multiply "Spacing of Fasteners" above by a factor of 12/s, where "s" is the siding width in inches. Fastener spacing shall never be greater than the manufacturer's minimum recommendations.

with fasteners penetrating into or through wood or wood structural sheathing of minimum thickness as specified by the manufacturer's instructions or test report, with or without penetration into the framing. Where the fastener penetrates fully through the sheathing, the end of the fastener shall extend not less than $^1/_4$ inch (6.4 mm) beyond the opposite face of the sheathing. Fasteners for vinyl siding and insulated vinyl siding installed over foam plastic sheathing shall be in accordance with Section R703.11.2. Fasteners for vinyl siding and insulated vinyl siding installed over fiberboard or gypsum sheathing shall penetrate not less than $1^1/_4$ inches (32 mm) into framing.

4. Fasteners for vertical or horizontal wood siding shall penetrate not less than $1^1/_2$ inches (38 mm) into studs, studs and wood sheathing combined, or blocking.
5. Fasteners for siding material installed over foam plastic sheathing shall have sufficient length to accommodate foam plastic sheathing thickness and to penetrate framing or sheathing and framing combined, as specified in Items 1 through 4.

R703.4 Flashing. Approved corrosion-resistant flashing shall be applied shingle-fashion in a manner to prevent entry of water into the wall cavity or penetration of water to the building structural framing components. Self-adhered membranes used as flashing shall comply with AAMA 711. Fluid-applied membranes used as flashing in exterior walls shall comply with AAMA 714. The flashing shall extend to the surface of the exterior wall finish. Approved corrosion-resistant flashings shall be installed at the following locations:

1. Exterior window and door openings. Flashing at exterior window and door openings shall extend to the surface of the exterior wall finish or to the water-resistive barrier complying with Section 703.2 for subsequent drainage. Mechanically attached flexible flashings shall comply with AAMA 712. Flashing at exterior window and door openings shall be installed in accordance with one or more of the following:
   1.1. The fenestration manufacturer's installation and flashing instructions, or for applications not addressed in the fenestration manufacturer's instructions, in accordance with the flashing manufacturer's instructions. Where flashing instructions or details are not provided, pan flashing shall be installed at the sill of exterior window and door openings. Pan flashing shall be sealed or sloped in such a manner as to direct water to the surface of the exterior wall finish or to the water-resistive barrier for subsequent drainage. Openings using pan flashing shall incorporate flashing or protection at the head and sides.
   1.2. In accordance with the flashing design or method of a registered design professional.
   1.3. In accordance with other approved methods.
2. At the intersection of chimneys or other masonry construction with frame or stucco walls, with projecting lips on both sides under stucco copings.
3. Under and at the ends of masonry, wood or metal copings and sills.
4. Continuously above all projecting wood trim.
5. Where exterior porches, decks or stairs attach to a wall or floor assembly of wood-frame construction.
6. At wall and roof intersections.
7. At built-in gutters.

R703.5 Wood, hardboard and wood structural panel siding. Wood, hardboard, and wood structural panel siding shall be installed in accordance with this section and Table R703.3(1). Hardboard siding shall comply with CPA/ANSI A135.6. Hardboard siding used as architectural trim shall comply with CPA/ANSI A 135.7.

R703.5.1 Vertical wood siding. Wood siding applied vertically shall be nailed to horizontal nailing strips or blocking set not more than 24 inches (610 mm) on center.

R703.5.2 Panel siding. Three-eighths-inch (9.5 mm) wood structural panel siding shall not be applied directly to studs spaced more than 16 inches (406 mm) on center where long dimension is parallel to studs. Wood structural panel siding $^7/_{16}$ inch (11.1 mm) or thinner shall not be applied directly to studs spaced more than 24 inches (610 mm) on center. The stud spacing shall not exceed the panel span rating provided by the manufacturer unless the panels are installed with the face grain perpendicular to the studs or over sheathing approved for that stud spacing.

Joints in wood, hardboard or wood structural panel siding shall be made as follows unless otherwise approved. Vertical joints in panel siding shall occur over framing members, unless wood or wood structural panel sheathing is used, and shall be shiplapped or covered with a batten. Horizontal joints in panel siding shall be lapped not less than 1 inch (25 mm) or shall be shiplapped or flashed with Z-flashing and occur over solid blocking, wood or wood structural panel sheathing.

R703.5.3 Horizontal wood siding. Horizontal lap siding shall be installed in accordance with the manufacturer's recommendations. Where there are no recommendations the siding shall be lapped not less than 1 inch (25 mm), or $^1/_2$ inch (12.7 mm) if rabbeted, and shall have the ends caulked, covered with a batten or sealed and installed over a strip of flashing.

R703.6 Wood shakes and shingles. Wood shakes and shingles shall conform to CSSB.

R703.6.1 Application. Wood shakes or shingles shall be applied either single course or double course over nominal $^1/_2$-inch (12.7 mm) wood-based sheathing or to furring strips over $^1/_2$-inch (12.7 mm) nominal nonwood sheathing. A water-resistive barrier shall be provided over all sheathing, with horizontal overlaps in the membrane of not less than 2 inches (51 mm) and vertical overlaps of not less than 6 inches (152 mm). Where horizontal furring strips are used, they shall be 1 inch by 3 inches or 1 inch by 4 inches (25 mm by 76 mm or 25 mm by 102 mm) and shall be fastened to the studs with minimum 7d or 8d box nails and shall be spaced a distance on center equal to the actual weather exposure of

the shakes or shingles, not to exceed the maximum exposure specified in Table R703.6.1. When installing shakes or shingles over a nonpermeable water-resistive barrier, furring strips shall be placed first vertically over the barrier and in addition, horizontal furring strips shall be fastened to the vertical furring strips prior to attaching the shakes or shingles to the horizontal furring strips. The spacing between adjacent shingles to allow for expansion shall be $^1/_8$ inch (3.2 mm) to $^1/_4$ inch (6.4 mm) apart, and between adjacent shakes shall be $^3/_8$ inch (9.5 mm) to $^1/_2$ inch (12.7 mm) apart. The offset spacing between joints in adjacent courses shall be not less than $1^1/_2$ inches (38 mm).

TABLE R703.6.1
MAXIMUM WEATHER EXPOSURE FOR WOOD SHAKES AND SHINGLES ON EXTERIOR WALLS[a, b, c]
(Dimensions are in inches)

LENGTH	EXPOSURE FOR SINGLE COURSE	EXPOSURE FOR DOUBLE COURSE
Shingles[a]		
16	7	12[b]
18	8	14[c]
24	$10^1/_2$	16[d]
Shakes[a]		
18	8	14
24	$10^1/_2$	18

For SI: 1 inch = 25.4 mm.

a. Dimensions given are for No. 1 grade.

b. A maximum 9-inch exposure is permitted for No. 2 grade.

c. A maximum 10-inch exposure is permitted for No. 2 grade.

d. A maximum 14-inch exposure is permitted for No. 2 grade.

R703.6.2 Weather exposure. The maximum weather exposure for shakes and shingles shall not exceed that specified in Table 703.6.1.

R703.6.3 Attachment. Wood shakes or shingles shall be installed according to this chapter and the manufacturer's instructions. Each shake or shingle shall be held in place by two stainless steel Type 304, Type 316 or hot-dipped zinc-coated galvanized corrosion-resistant box nails in accordance with Table R703.6.3(1) or R703.6.3(2). The hot-dipped zinc-coated galvanizing shall be in compliance with ASTM A153, 1.0 ounce per square foot. Alternatively, 16-gage stainless steel Type 304 or Type 316 staples with crown widths $^7/_{16}$ inch (11 mm) minimum, $^3/_4$ inch (19 mm) maximum, shall be used and the crown of the staple shall be placed parallel with the butt of the shake or the shingle. In single-course application, the fasteners shall be concealed by the course above and shall be driven approximately 1 inch (25 mm) above the butt line of the succeeding course and $^3/_4$ inch (19 mm) from the edge. In double-course applications, the exposed shake or shingle shall be face-nailed with two fasteners, driven approximately 2 inches (51 mm) above the butt line and $^3/_4$ inch (19 mm) from each edge. Fasteners installed within 15 miles (24 km) of salt water coastal areas shall be stainless steel Type 316. Fasteners for fire-retardant-treated shakes or shingles in accordance with Section R902 or pressure-impregnated-preservative-treated shakes or shingles in accordance with AWPA U1 shall be stainless steel Type 316. The fasteners shall penetrate the sheathing or furring strips by not less than $^1/_2$ inch (13 mm) and shall not be overdriven. Fasteners for untreated (natural) and treated products shall comply with ASTM F1667.

R703.6.4 Bottom courses. The bottom courses shall be doubled.

R703.7 Exterior plaster (stucco). Installation of exterior plaster shall be in compliance with ASTM C926, ASTM C1063 and the provisions of this code.

R703.7.1 Lath. Lath and lath attachments shall be of corrosion-resistant materials. Expanded metal or woven wire lath shall be attached with $1^1/_2$-inch-long (38 mm), 11-gage nails having a $^7/_{16}$-inch (11.1 mm) head, or $^7/_8$-inch-long (22.2 mm), 16-gage staples, spaced not more than 6 inches (152 mm) or as otherwise approved.

Exception: Lath is not required over masonry, cast-in-place concrete, precast concrete or stone substrates prepared in accordance with ASTM C1063.

R703.7.2 Plaster. Plastering with cement plaster shall be in accordance with ASTM C926. Cement materials shall be in accordance with one of the following:

1. Masonry cement conforming to ASTM C91 Type M, S or N.
2. Portland cement conforming to ASTM C150 Type I, II, or III.
3. Blended hydraulic cement conforming to ASTM C595 Type IP, IS (< 70), IL, or IT (S < 70).
4. Hydraulic cement conforming to ASTM C1157 Type GU, HE, MS, HS, or MH.
5. Plastic (stucco) cement conforming to ASTM C1328.

Plaster shall be not less than three coats where applied over metal lath or wire lath and shall be not less than two coats where applied over masonry, concrete, pressure-preservative-treated wood or decay-resistant wood as specified in Section R317.1 or gypsum backing. If the plaster surface is completely covered by veneer or other facing material or is completely concealed, plaster application need be only two coats, provided the total thickness is as set forth in Table R702.1(1).

On wood-frame construction with an on-grade floor slab system, exterior plaster shall be applied to cover, but not extend below, lath, paper and screed.

The proportion of aggregate to cementitious materials shall be as set forth in Table R702.1(3).

R703.7.2.1 Weep screeds. A minimum 0.019-inch (0.5 mm) (No. 26 galvanized sheet gage), corrosion-resistant weep screed or plastic weep screed, with a minimum vertical attachment flange of $3^1/_2$ inches (89 mm), shall be provided at or below the foundation plate line on exterior stud walls in accordance with ASTM C926. The weep screed shall be placed not less than 4 inches (102 mm) above the earth or 2 inches (51 mm) above paved areas and shall be of a type that will allow trapped water to drain to the exterior of the building. The weather-resistant barrier shall lap the attachment flange. The exterior lath shall cover and terminate on the attachment flange of the weep screed.

TABLE R703.6.3(1)
SINGLE-COURSE SIDEWALL FASTENERS

SINGLE-COURSE SIDEWALL FASTENERS			
Product type	Nail type and minimum length (inches)	Minimum head diameter (inches)	Minimum shank thickness (inches)
R & R and sanded shingles			
16″ and 18″ shingles	3d box $1^1/_4$	0.19	0.08
24″ shingles	4d box $1^1/_2$	0.19	0.08
Grooved shingles			
16″ and 18″ shingles	3d box $1^1/_4$	0.19	0.08
24″ shingles	4d box $1^1/_2$	0.19	0.08
Split and sawn shakes			
18″ straight-split shakes	5d box $1^3/_4$	0.19	0.08
18″ and 24″ handsplit shakes	6d box 2	0.19	0.0915
24″ tapersplit shakes	5d box $1^3/_4$	0.19	0.08
18″ and 24″ tapersawn shakes	6d box 2	0.19	0.0915

For SI: 1 inch = 25.4 mm.

TABLE R703.6.3(2)
DOUBLE-COURSE SIDEWALL FASTENERS

DOUBLE-COURSE SIDEWALL FASTENERS			
Product type	Nail type and minimum length (inches)	Minimum head diameter (inches)	Minimum shank thickness (inches)
R & R and sanded shingles			
16,″ 8″ and 24″ shingles	5d box $1^3/_4$ or same size casing nails	0.19	0.08
Grooved shingles			
16,″ 18″ and 24″shingles	5d box $1^3/_4$	0.19	0.08
Split and sawn shakes			
18″ straight-split shakes	7d box $2^1/_4$ or 8d $2^1/_2$	0.19	0.099
18″ and 24″ handsplit shakes	7d box $2^1/_4$ or 8d $2^1/_2$	0.19	0.099
24″ tapersplit shakes	7d box $2^1/_4$ or 8d $2^1/_2$	0.19	0.099
18″ and 24″ tapersawn shakes	7d box $2^1/_4$ or 8d $2^1/_2$	0.19	0.099

For SI: 1 inch = 25.4 mm.

R703.7.3 Water-resistive barriers. Water-resistive barriers shall be installed as required in Section R703.2 and, where applied over wood-based sheathing, shall include a water-resistive, vapor-permeable barrier with a performance at least equivalent to two layers of Grade D paper. The individual layers shall be installed independently such that each layer provides a separate continuous plane and any flashing, installed in accordance with Section R703.4 and intended to drain to the water-resistive barrier, is directed between the layers.

Exception: Where the water-resistive barrier that is applied over wood-based sheathing has a water resistance equal to or greater than that of 60-minute Grade D paper and is separated from the stucco by an intervening, substantially nonwater-absorbing layer or designed drainage space.

R703.7.4 Application. Each coat shall be kept in a moist condition for at least 48 hours prior to application of the next coat.

Exception: Applications installed in accordance with ASTM C926.

R703.7.5 Curing. The finish coat for two-coat cement plaster shall not be applied sooner than seven days after application of the first coat. For three-coat cement plaster, the second coat shall not be applied sooner than 48 hours after application of the first coat. The finish coat for three-coat cement plaster shall not be applied sooner than seven days after application of the second coat.

R703.8 Anchored stone and masonry veneer, general. Anchored stone and masonry veneer shall be installed in accordance with this chapter, Table R703.3(1) and Figure R703.8. These veneers installed over a backing of wood or cold-formed steel shall be limited to the first story above grade plane and shall not exceed 5 inches (127 mm) in thickness. See Section R602.10 for wall bracing requirements for masonry veneer for wood-framed construction and Section R603.9.5 for wall bracing requirements for masonry veneer for cold-formed steel construction.

Exceptions:

1. For buildings in Seismic Design Categories A, B and C, exterior stone or masonry veneer, as specified in Table R703.8(1), with a backing of wood or

steel framing shall be permitted to the height specified in Table R703.8(1) above a noncombustible foundation.

2. For detached one- or two-family dwellings in Seismic Design Categories D_0, D_1 and D_2, exterior stone or masonry veneer, as specified in Table R703.8(2), with a backing of wood framing shall be permitted to the height specified in Table R703.8(2) above a noncombustible foundation.

R703.8.1 Interior veneer support. Veneers used as interior wall finishes shall be permitted to be supported on wood or cold-formed steel floors that are designed to support the loads imposed.

R703.8.2 Exterior veneer support. Except in Seismic Design Categories D_0, D_1 and D_2, exterior masonry veneers having an installed weight of 40 pounds per square foot (195 kg/m^2) or less shall be permitted to be supported on wood or cold-formed steel construction. Where masonry veneer supported by wood or cold-formed steel construction adjoins masonry veneer supported by the foundation, there shall be a movement joint between the veneer supported by the wood or cold-formed steel construction and the veneer supported by the foundation. The wood or cold-formed steel construction supporting the masonry veneer shall be designed to limit the deflection to $^1/_{600}$ of the span for the supporting members. The design of the wood or cold-formed steel construction shall consider the weight of the veneer and any other loads.

R703.8.2.1 Support by steel angle. A minimum 6-inch by 4-inch by $^5/_{16}$-inch (152 mm by 102 mm by 8 mm) steel angle, with the long leg placed vertically, shall be anchored to double 2-inch by 4-inch (51 mm by 102 mm) wood studs or double 350S162 cold-formed steel studs at a maximum on-center spacing of 16 inches (406 mm). Anchorage of the steel angle at every double stud

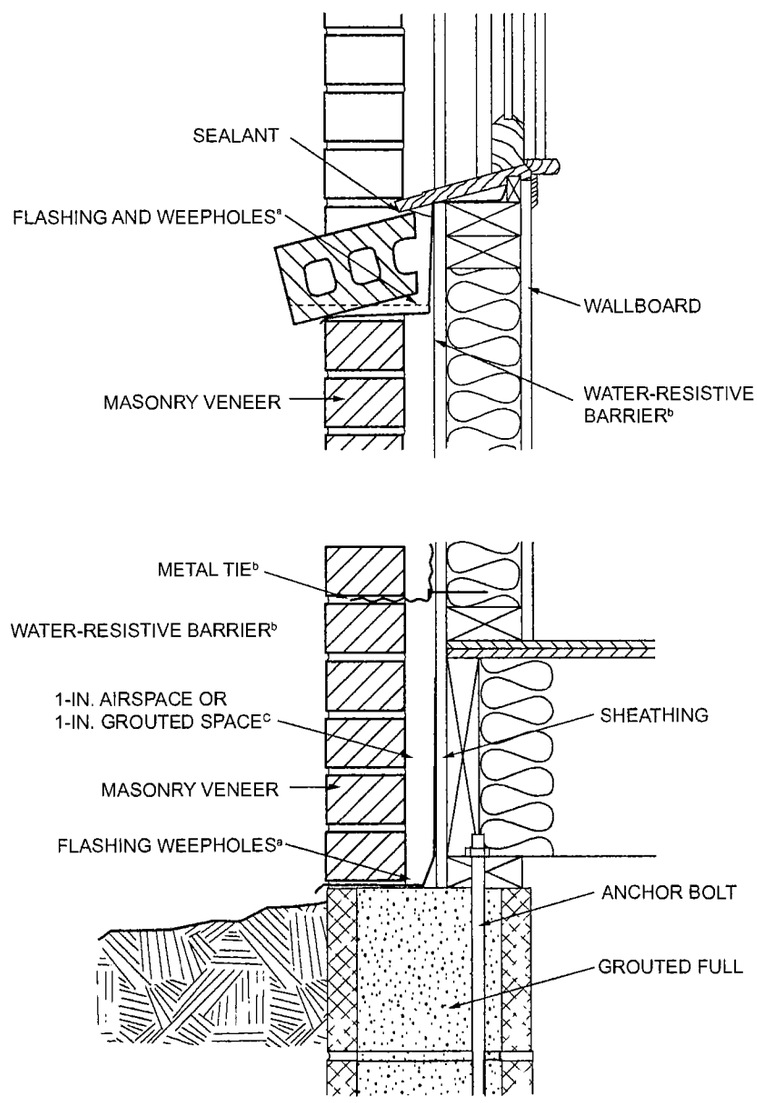

For SI. 1 inch = 24.5 mm.

FIGURE R703.8
TYPICAL MASONRY VENEER WALL DETAILS[e]
(continued)

spacing shall be not less than two $^{7}/_{16}$-inch-diameter (11 mm) by 4-inch (102 mm) lag screws for wood construction or two $^{7}/_{16}$-inch (11.1 mm) bolts with washers for cold-formed steel construction. The steel angle shall have a minimum clearance to underlying construction of $^{1}/_{16}$ inch (1.6 mm). Not less than two-thirds the width of the masonry veneer thickness shall bear on the steel angle. Flashing and weep holes shall be located in the masonry veneer in accordance with Figure R703.8.2.1. The maximum height of masonry veneer above the steel angle support shall be 12 feet 8 inches (3861 mm). The airspace separating the masonry veneer from the wood backing shall be in accordance with Sections R703.8.4 and R703.8.4.2. The method of support for the masonry veneer on wood construction shall be constructed in accordance with Figure R703.8.2.1.

The maximum slope of the roof construction without stops shall be 7:12. Roof construction with slopes greater than 7:12 but not more than 12:12 shall have stops of a minimum 3-inch by 3-inch by $^{1}/_{4}$-inch (76 mm by 76 mm by 6.4 mm) steel plate welded to the angle at 24 inches (610 mm) on center along the angle or as approved by the building official.

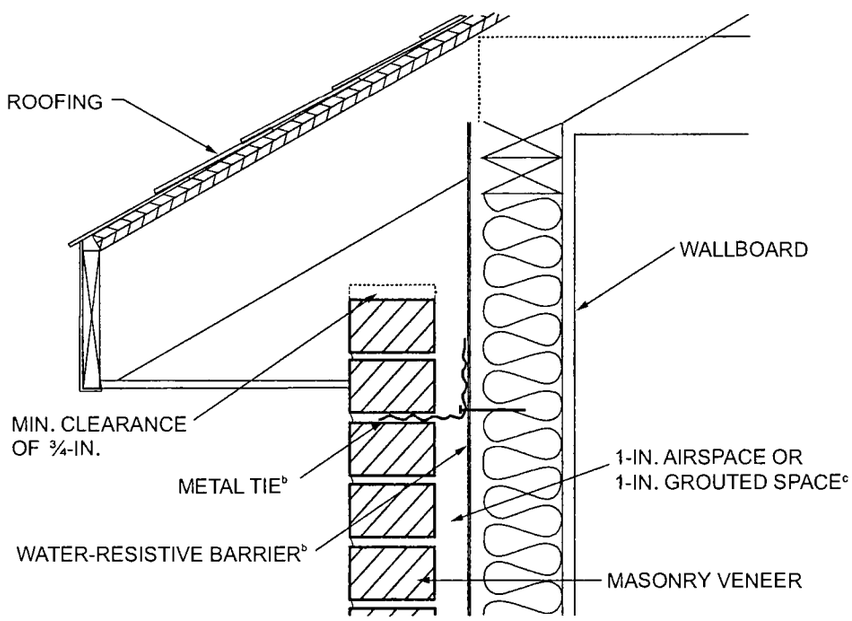

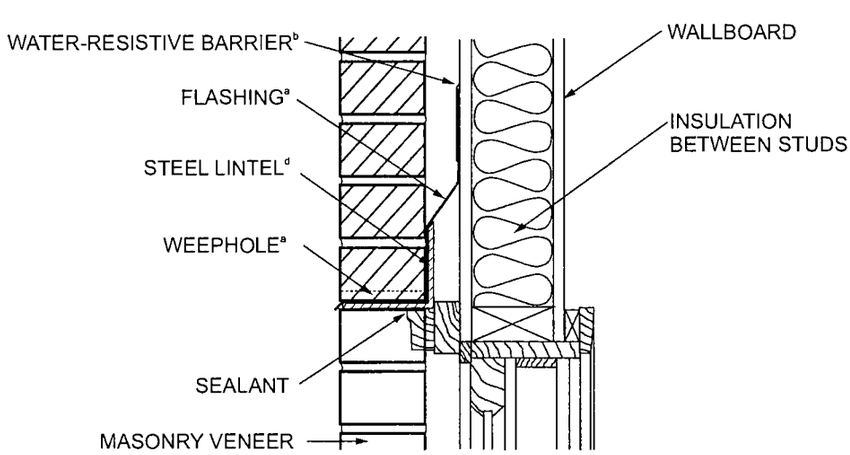

For SI: 1 inch = 25.4 mm.

a. See Sections R703.4, R703.8.5 and R703.8.6.

b. See Sections R703.2 and R703.8.4.

c. See Table R703.8.4 and Section R703.8.4.2.

d. See Section R703.8.3.

e. Figure R703.8 illustrates typical construction details for a masonry veneer wall. For the actual mandatory requirements of this code, see the indicated sections of text. Other details of masonry veneer wall construction shall be permitted provided the requirements of the indicated sections of text are met.

FIGURE R703.8—continued
TYPICAL MASONRY VENEER WALL DETAILS[e]

TABLE R703.8(1)
STONE OR MASONRY VENEER LIMITATIONS AND REQUIREMENTS, WOOD OR STEEL FRAMING, SEISMIC DESIGN CATEGORIES A, B AND C

SEISMIC DESIGN CATEGORY	NUMBER OF WOOD- OR STEEL-FRAMED STORIES	MAXIMUM HEIGHT OF VENEER ABOVE NONCOMBUSTIBLE FOUNDATION[a] (feet)	MAXIMUM NOMINAL THICKNESS OF VENEER (inches)	MAXIMUM WEIGHT OF VENEER (psf)[b]	WOOD- OR STEEL-FRAMED STORY
A or B	Steel: 1 or 2 Wood: 1, 2 or 3	30	5	50	all
C	1	30	5	50	1 only
	2	30	5	50	top
					bottom
	Wood only: 3	30	5	50	top
					middle
					bottom

For SI: 1 inch = 25.4 mm, 1 foot = 304.8 mm, 1 pound per square foot = 0.479 kPa.

a. An additional 8 feet is permitted for gable end walls. See also story height limitations of Section R301.3.

b. Maximum weight is installed weight and includes weight of mortar, grout, lath and other materials used for installation. Where veneer is placed on both faces of a wall, the combined weight shall not exceed that specified in this table.

TABLE R703.8(2)
STONE OR MASONRY VENEER LIMITATIONS AND REQUIREMENTS, ONE- AND TWO-FAMILY DETACHED DWELLINGS, SEISMIC DESIGN CATEGORIES D_0, D_1 AND D_2

SEISMIC DESIGN CATEGORY	NUMBER OF WOOD-FRAMED STORIES[a]	MAXIMUM HEIGHT OF VENEER ABOVE NONCOMBUSTIBLE FOUNDATION OR FOUNDATION WALL (feet)	MAXIMUM NOMINAL THICKNESS OF VENEER (inches)	MAXIMUM WEIGHT OF VENEER (psf)[b]
D_0	1	20[c]	4	40
	2	20[c]	4	40
	3	30[d]	4	40
D_1	1	20[c]	4	40
	2	20[c]	4	40
	3	20[c]	4	40
D_2	1	20[c]	3	30
	2	20[c]	3	30

For SI: 1 inch = 25.4 mm, 1 foot = 304.8 mm, 1 pound per square foot = 0.479 kPa, 1 pound-force = 4.448 N.

a. Cripple walls are not permitted in Seismic Design Categories D_0, D_1 and D_2.

b. Maximum weight is installed weight and includes weight of mortar, grout and lath, and other materials used for installation.

c. The veneer shall not exceed 20 feet in height above a noncombustible foundation, with an additional 8 feet permitted for gable end walls, or 30 feet in height with an additional 8 feet for gable end walls where the lower 10 feet have a backing of concrete or masonry wall. See story height limitations of Section R301.3.

d. The veneer shall not exceed 30 feet in height above a noncombustible foundation, with an additional 8 feet permitted for gable end walls. See story height limitations of Section R301.3.

R703.8.2.2 Support by roof construction. A steel angle shall be placed directly on top of the roof construction. The roof supporting construction for the steel angle shall consist of not fewer than three 2-inch by 6-inch (51 mm by 152 mm) wood members for wood construction or three 550S162 cold-formed steel members for cold-formed steel light frame construction. A wood member abutting the vertical wall stud construction shall be anchored with not fewer than three $^5/_8$-inch (15.9 mm) diameter by 5-inch (127 mm) lag screws to every wood stud spacing. Each additional wood roof member shall be anchored by the use of two 10d nails at every wood stud spacing. A cold-formed steel member abutting the vertical wall stud shall be anchored with not fewer than nine No. 8 screws to every cold-formed steel stud. Each additional cold-formed steel roof member shall be anchored to the adjoining roof member using two No. 8 screws at every stud spacing. Not less than two-thirds the width of the masonry veneer thickness shall bear on the steel angle. Flashing and weep holes shall be located in the masonry veneer wythe in accordance with Figure R703.8.2.2. The maximum height of the masonry veneer above the steel angle support shall be 12 feet 8 inches (3861 mm). The airspace separating the masonry veneer from the wood backing shall be in accordance with Sections R703.8.4 and R703.8.4.2. The support for the masonry veneer shall be constructed in accordance with Figure R703.8.2.2.

The maximum slope of the roof construction without stops shall be 7:12. Roof construction with slopes greater than 7:12 but not more than 12:12 shall have stops of a minimum 3-inch by 3-inch by $^1/_4$-inch (76 mm by 76 mm by 6.4 mm) steel plate welded to the angle at 24 inches (610 mm) on center along the angle or as approved by the building official.

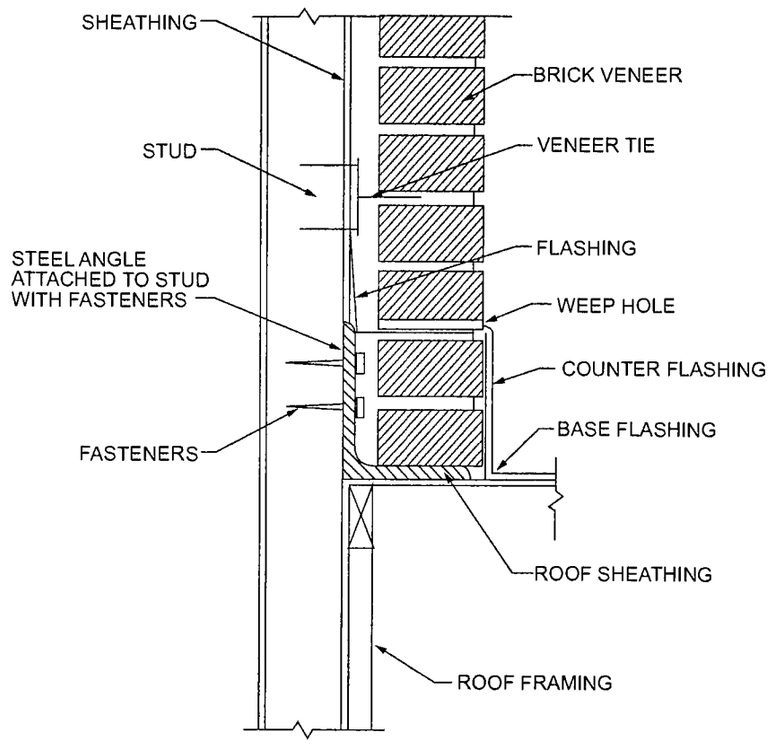

SUPPORT BY STEEL ANGLE

FIGURE R703.8.2.1
EXTERIOR MASONRY VENEER SUPPORT BY STEEL ANGLES

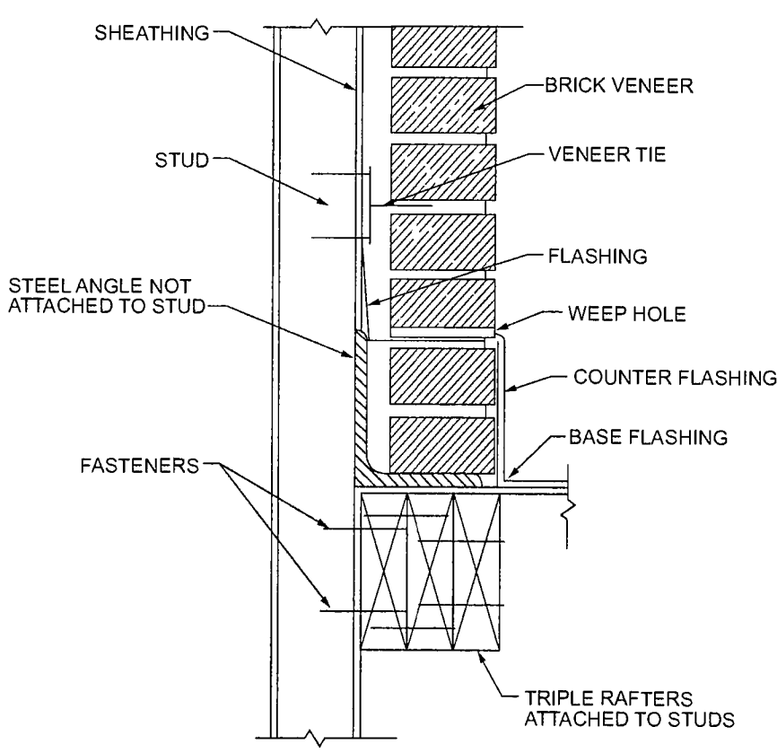

SUPPORT BY ROOF MEMBERS

FIGURE R703.8.2.2
EXTERIOR MASONRY VENEER SUPPORT BY ROOF MEMBERS

R703.8.3 Lintels. Masonry veneer shall not support any vertical load other than the dead load of the veneer above. Veneer above openings shall be supported on lintels of noncombustible materials. The lintels shall have a length of bearing not less than 4 inches (102 mm). Steel lintels shall be shop coated with a rust-inhibitive paint, except for lintels made of corrosion-resistant steel or steel treated with coatings to provide corrosion resistance. Construction of openings shall comply with either Section R703.8.3.1 or 703.8.3.2.

R703.8.3.1 Allowable span. The allowable span shall not exceed the values set forth in Table R703.8.3.1.

R703.8.3.2 Maximum span. The allowable span shall not exceed 18 feet 3 inches (5562 mm) and shall be constructed to comply with Figure R703.8.3.2 and the following:

1. Provide a minimum length of 18 inches (457 mm) of masonry veneer on each side of opening as shown in Figure R703.8.3.2.
2. Provide a minimum 5-inch by $3^1/_2$-inch by $^5/_{16}$-inch (127 mm by 89 mm by 7.9 mm) steel angle above the opening and shore for a minimum of 7 days after installation.
3. Provide double-wire joint reinforcement extending 12 inches (305 mm) beyond each side of the opening. Lap splices of joint reinforcement not less than 12 inches (305 mm). Comply with one of the following:
   - 3.1. Double-wire joint reinforcement shall be $^3/_{16}$-inch (4.8 mm) diameter and shall be placed in the first two bed joints above the opening.
   - 3.2. Double-wire joint reinforcement shall be 9 gauge (0.144 inch or 3.66 mm diameter) and shall be placed in the first three bed joints above the opening.
4. Provide the height of masonry veneer above opening, in accordance with Table R703.8.3.2.

R703.8.4 Anchorage. Masonry veneer shall be anchored to the supporting wall studs with corrosion-resistant metal ties embedded in mortar or grout and extending into the veneer a minimum of $1^1/_2$ inches (38 mm), with not less than $^5/_8$-inch (15.9 mm) mortar or grout cover to outside face. Masonry veneer shall conform to Table R703.8.4(1). For masonry veneer tie attachment through insulating sheathing not greater than 2 inches (51 mm) in thickness to not less than 7/16 performance category wood structural panel, see Table R703.8.4(2).

TABLE R703.8.3.2
HEIGHT OF MASONRY VENEER ABOVE OPENING

MINIMUM HEIGHT OF MASONRY VENEER ABOVE OPENING (INCH)	MAXIMUM HEIGHT OF MASONRY VENEER ABOVE OPENING (FEET)
13	< 5
24	5 to < 12
60	12 to height above support allowed by Section R703.8

For SI: 1 inch = 25.4 mm, 1 foot = 304.8 mm.

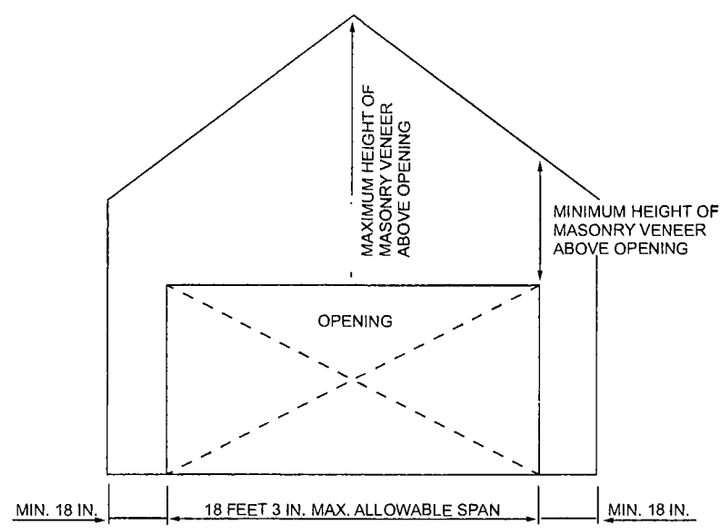

For SI: 1 inch = 25.4 mm, 1 foot = 304.8 mm.

FIGURE R703.8.3.2
MASONRY VENEER OPENING

TABLE R703.8.3.1
ALLOWABLE SPANS FOR LINTELS SUPPORTING MASONRY VENEER[a, b, c, d]

SIZE OF STEEL ANGLE[a, c, d] (inches)	NO STORY ABOVE	ONE STORY ABOVE	TWO STORIES ABOVE	NO. OF $^1/_2$-INCH OR EQUIVALENT REINFORCING BARS IN REINFORCED LINTEL[b, d]
$3 \times 3 \times {}^1/_4$	6′-0″	4′-6″	3′-0″	1
$4 \times 3 \times {}^1/_4$	8′-0″	6′-0″	4′-6″	1
$5 \times 3^1/_2 \times {}^5/_{16}$	10′-0″	8′-0″	6′-0″	2
$6 \times 3^1/_2 \times {}^5/_{16}$	14′-0″	9′-6″	7′-0″	2
$2\text{-}6 \times 3^1/_2 \times {}^5/_{16}$	20′-0″	12′-0″	9′-6″	4

For SI: 1 inch = 25.4 mm, 1 foot = 304.8 mm.

a. Long leg of the angle shall be placed in a vertical position.

b. Depth of reinforced lintels shall be not less than 8 inches and all cells of hollow masonry lintels shall be grouted solid. Reinforcing bars shall extend not less than 8 inches into the support.

c. Steel members indicated are adequate typical examples; other steel members meeting structural design requirements shall be permitted to be used.

d. Either steel angle or reinforced lintel shall span opening.

R703.8.4.1 Size and spacing. Veneer ties, if strand wire, shall be not less in thickness than No. 9 U.S. gage [(0.148 inch) (4 mm)] wire and shall have a hook embedded in the mortar joint, or if sheet metal, shall be not less than No. 22 U.S. gage by [(0.0299 inch) (0.76 mm)] $^7/_8$ inch (22 mm) corrugated. Each tie shall support not more than 2.67 square feet (0.25 m^2) of wall area and shall be spaced not more than 32 inches (813 mm) on center horizontally and 24 inches (635 mm) on center vertically.

Exception: In Seismic Design Category D_0, D_1 or D_2 or townhouses in Seismic Design Category C or in wind areas of more than 30 pounds per square foot pressure (1.44 kPa), each tie shall support not more than 2 square feet (0.2 m^2) of wall area.

R703.8.4.1.1 Veneer ties around wall openings. Additional metal ties shall be provided around wall openings greater than 16 inches (406 mm) in either dimension. Metal ties around the perimeter of openings shall be spaced not more than 3 feet (9144 mm) on center and placed within 12 inches (305 mm) of the wall opening.

R703.8.4.2 Grout fill. As an alternative to the airspace required by Table R703.8.4, grout shall be permitted to fill the airspace. Where the airspace is filled with grout, a water-resistive barrier is required over studs or sheathing. Where the airspace is filled, replacing the sheathing and water-resistive barrier with a wire mesh and approved water-resistive barrier or an approved water-resistive barrier-backed reinforcement attached directly to the studs is permitted.

R703.8.5 Flashing. Flashing shall be located beneath the first course of masonry above finished ground level above the foundation wall or slab and at other points of support, including structural floors, shelf angles and lintels where masonry veneers are designed in accordance with Section R703.8. See Section R703.4 for additional requirements.

R703.8.6 Weepholes. Weepholes shall be provided in the outside wythe of masonry walls at a maximum spacing of 33 inches (838 mm) on center. Weepholes shall be not less than $^3/_{16}$ inch (5 mm) in diameter. Weepholes shall be located immediately above the flashing.

R703.9 Exterior insulation and finish system (EIFS)/EIFS with drainage. Exterior insulation and finish systems (EIFS) shall comply with this chapter and Section R703.9.1. EIFS with drainage shall comply with this chapter and Section R703.9.2.

R703.9.1 Exterior insulation and finish systems (EIFS). EIFS shall comply with the following:

1. ASTM E2568.
2. EIFS shall be limited to applications over substrates of concrete or masonry wall assemblies.
3. Flashing of EIFS shall be provided in accordance with the requirements of Section R703.4.
4. EIFS shall be installed in accordance with the manufacturer's instructions.
5. EIFS shall terminate not less than 6 inches (152 mm) above the finished ground level.
6. Decorative trim shall not be face-nailed through the EIFS.

R703.9.2 Exterior insulation and finish system (EIFS) with drainage. EIFS with drainage shall comply with the following:

1. ASTM E2568.
2. EIFS with drainage shall be required over all wall assemblies with the exception of substrates of concrete or masonry wall assemblies.
3. EIFS with drainage shall have an average minimum drainage efficiency of 90 percent when tested in accordance with ASTM E2273.
4. The water-resistive barrier shall comply with Section R703.2 or ASTM E2570.
5. The water-resistive barrier shall be applied between the EIFS and the wall sheathing.
6. Flashing of EIFS with drainage shall be provided in accordance with the requirements of Section R703.4.
7. EIFS with drainage shall be installed in accordance with the manufacturer's instructions.
8. EIFS with drainage shall terminate not less than 6 inches (152 mm) above the finished ground level.
9. Decorative trim shall not be face-nailed through the EIFS with drainage.

TABLE R703.8.4(1)
TIE ATTACHMENT AND AIRSPACE REQUIREMENTS

BACKING AND TIE	MINIMUM TIE	MINIMUM TIE FASTENER[a]	AIRSPACE[c]	
Wood stud backing with corrugated sheet metal	22 U.S. gage (0.0299 in.) × $^7/_8$ in. wide	8d common nail [b] ($2^1/_2$ in. × 0.131 in.)	Nominal 1 in. between sheathing and veneer	
Wood stud backing with metal strand wire	W1.7 (No. 9 U.S. gage; 0.148 in.) with hook embedded in mortar joint	8d common nail [b] ($2^1/_2$ in. × 0.131 in.)	Minimum nominal 1 in. between sheathing and veneer	Maximum $4^1/_2$ in. between backing and veneer
Cold-formed steel stud backing with adjustable metal strand wire	W1.7 (No. 9 U.S. gage; 0.148 in.) with hook embedded in mortar joint	No. 10 screw extending through the steel framing a minimum of three exposed threads	Minimum nominal 1 in. between sheathing and veneer	Maximum $4^1/_2$ in. between backing and veneer

For SI: 1 inch = 25.4 mm.

a. In Seismic Design Category D_0, D_1 or D_2, the minimum tie fastener shall be an 8d ring-shank nail ($2^1/_2$ in. × 0.131 in.) or a No. 10 screw extending through the steel framing a minimum of three exposed threads.

b. All fasteners shall have rust-inhibitive coating suitable for the installation in which they are being used, or be manufactured from material not susceptible to corrosion.

c. An airspace that provides drainage shall be permitted to contain mortar from construction.

TABLE R703.8.4(2)
REQUIRED BRICK TIE SPACING FOR DIRECT APPLICATION TO WOOD STRUCTURAL PANEL SHEATHING[a, b, c]

FASTENER TYPE[d]	SIZE (DIA. OR SCREW #)	REQUIRED BRICK-TIE SPACING (VERTICAL-TIE SPACING/HORIZONTAL-TIE SPACING) (inches/inches)											
		110 mph V Ultimate			115 mph V Ultimate			130 mph V Ultimate			140 mph V Ultimate		
		Zone 5, Exposure B	Zone 5, Exposure C	Zone 5, Exposure D	Zone 5, Exposure B	Zone 5, Exposure C	Zone 5, Exposure D	Zone 5, Exposure B	Zone 5, Exposure C	Zone 5, Exposure D	Zone 5, Exposure B	Zone 5, Exposure C	Zone 5, Exposure D
Ring Shank Nails	0.091	16/16, 16/12, 12/16, 12/12	16/12, 12/16, 12/12	12/12	16/16, 16/12, 12/16, 12/12	16/12, 12/16, 12/12	12/12	16/12, 12/16, 12/12	12/12	—	12/12	—	—
	0.148	24/16, 16/24, 16/16, 16/12, 12/16, 12/12	16/16, 16/12, 12/16, 12/12	16/16, 16/12, 12/16, 12/12	24/16, 16/24, 16/16, 16/12, 12/16, 12/12	16/16, 16/12, 12/16, 12/12	16/16, 16/12, 12/16, 12/12	16/16, 16/12, 12/16, 12/12	16/12, 12/16, 12/12	16/12, 12/16, 12/12	16/16, 16/12, 12/16, 12/12	16/12, 12/16, 12/12	12/12
Screws	#6	24/16, 16/24, 16/16, 16/12, 12/16, 12/12	16/16, 16/12, 12/16, 12/12	16/16, 16/12, 12/16, 12/12	24/16, 16/24, 16/16, 16/12, 12/16, 12/12	16/16, 16/12, 12/16, 12/12	16/16, 16/12, 12/16, 12/12	16/16, 16/12, 12/16, 12/12	16/12, 12/16, 12/12	16/12, 12/16, 12/12	16/16, 16/12, 12/16, 12/12	16/12, 12/16, 12/12	12/12
	#8	24/16, 16/24, 16/16, 16/12, 12/16, 12/12	24/16, 16/24, 16/16, 16/12, 12/16, 12/12	16/16, 16/12, 12/16, 12/12	24/16, 16/24, 16/16, 16/12, 12/16, 12/12	16/16, 16/12, 12/16, 12/12	16/16, 16/12, 12/16, 12/12	24/16, 16/24, 16/16, 16/12, 12/16, 12/12	16/16, 16/12, 12/16, 12/12	16/12, 12/16, 12/12	16/16, 16/12, 12/16, 12/12	16/12, 12/16, 12/12	16/12, 12/16, 12/12
	#10	24/16, 16/24, 16/16, 16/12, 12/16, 12/12	24/16, 16/24, 16/16, 16/12, 12/16, 12/12	24/16, 16/24, 16/16, 16/12, 12/16, 12/12	24/16, 16/24, 16/16, 16/12, 12/16, 12/12	24/16, 16/24, 16/16, 16/12, 12/16, 12/12	16/16, 16/12, 12/16, 12/12	24/16, 16/24, 16/16, 16/12, 12/16, 12/12	16/16, 16/12, 12/16, 12/12	16/16, 16/12, 12/16, 12/12	24/16, 16/24, 16/16, 16/12, 12/16, 12/12	16/16, 16/12, 12/16, 12/12	16/12, 12/16, 12/12
	#14	24/16, 16/24, 16/16, 16/12, 12/16, 12/12	24/16, 16/24, 16/16, 16/12, 12/16, 12/12	24/16, 16/24, 16/16, 16/12, 12/16, 12/12	24/16, 16/24, 16/16, 16/12, 12/16, 12/12	24/16, 16/24, 16/16, 16/12, 12/16, 12/12	24/16, 16/24, 16/16, 16/12, 12/16, 12/12	24/16, 16/24, 16/16, 16/12, 12/16, 12/12	24/16, 16/24, 16/16, 16/12, 12/16, 12/12	16/16, 16/12, 12/16, 12/12	24/16, 16/24, 16/16, 16/12, 12/16, 12/12	16/16, 16/12, 12/16, 12/12	16/16, 16/12, 12/16, 12/12

For SI: 1 inch = 25.4 mm, 1 mph = 0.447 m/s.

a. This table is based on attachment of brick ties directly to wood structural panel sheathing only. Additional attachment of the brick tie to lumber framing is not required. The brick ties shall be permitted to be placed over any insulating sheathing, not to exceed 2 inches in thickness. Wood structural panel sheathing shall be a minimum 7/16 performance category. The table is based on a building height of 30 feet or less.

b. Wood structural panels shall have a specific gravity of 0.42 or greater in accordance with NDS.

c. Foam sheathing shall have a minimum compressive strength of 15 psi in accordance with ASTM C578 or ASTM C1289.

d. Fasteners shall be sized such that the tip of the fastener passes completely through the wood structural panel sheathing by not less than $^1/_4$ inch.

R703.10 Fiber cement siding.

R703.10.1 Panel siding. Fiber-cement panels shall comply with the requirements of ASTM C1186, Type A, minimum Grade II or ISO 8336, Category A, minimum Class 2. Panels shall be installed with the long dimension either parallel or perpendicular to framing. Vertical and horizontal joints shall occur over framing members and shall be protected with caulking, or with battens or flashing, or be vertical or horizontal shiplap, or otherwise designed to comply with Section R703.1. Panel siding shall be installed with fasteners in accordance with Table R703.3(1) or the approved manufacturer's instructions.

R703.10.2 Lap siding. Fiber-cement lap siding having a maximum width of 12 inches (305 mm) shall comply with the requirements of ASTM C1186, Type A, minimum Grade II or ISO 8336, Category A, minimum Class 2. Lap siding shall be lapped a minimum of $1^1/_4$ inches (32 mm) and lap siding not having tongue-and-groove end joints shall have the ends protected with caulking, covered with an H-section joint cover, located over a strip of flashing, or shall be designed to comply with Section R703.1. Lap siding courses shall be installed with the fastener heads exposed or concealed, in accordance with Table R703.3(1) or approved manufacturer's instructions.

R703.11 Vinyl siding. Vinyl siding shall be certified and labeled as conforming to the requirements of ASTM D3679 by an approved quality control agency.

R703.11.1 Installation. Vinyl siding, soffit and accessories shall be installed in accordance with the manufacturer's instructions.

R703.11.1.1 Fasteners. Unless specified otherwise by the manufacturer's instructions, fasteners for vinyl siding shall be 0.120-inch (3 mm) shank diameter nail with a 0.313-inch (8 mm) head or 16-gage staple with a $^3/_8$-inch (9.5 mm) to $^1/_2$-inch (12.7 mm) crown.

R703.11.1.2 Penetration depth. Unless specified otherwise by the manufacturer's instructions, fasteners shall penetrate into building framing. The total penetration into sheathing, furring framing or other nailable substrate shall be a minimum $1^1/_4$ inches (32 mm). Where specified by the manufacturer's instructions and supported by a test report, fasteners are permitted to penetrate into or fully through nailable sheathing or other nailable substrate of minimum thickness specified by the instructions or test report without penetrating into framing. Where the fastener penetrates fully through the sheathing, the end of the fastener shall extend a minimum of $^1/_4$ inch (6.4 mm) beyond the opposite face of the sheathing or nailable substrate.

R703.11.1.3 Spacing. Unless specified otherwise by the manufacturer's instructions, the maximum spacing between fasteners for horizontal siding shall be 16 inches (406 mm), and for vertical siding 12 inches (305 mm) both horizontally and vertically. Where specified by the manufacturer's instructions and supported by a test report, greater fastener spacing is permitted.

R703.11.2 Installation over foam plastic sheathing. Where vinyl siding or insulated vinyl siding is installed over foam plastic sheathing, the vinyl siding shall comply with Section R703.11 and shall have a design wind pressure resistance in accordance with Table R703.11.2.

Exceptions:

1. Where the foam plastic sheathing is applied directly over wood structural panels, fiberboard, gypsum sheathing or other approved backing capable of independently resisting the design wind pressure, the vinyl siding shall be installed in accordance with Sections R703.3.3 and R703.11.1.
2. Where the vinyl siding manufacturer's product specifications provide an approved design wind pressure rating for installation over foam plastic sheathing, use of this design wind pressure rating shall be permitted and the siding shall be installed in accordance with the manufacturer's installation instructions.
3. Where the foam plastic sheathing and its attachment have a design wind pressure resistance complying with Sections R316.8 and R301.2.1, the vinyl siding shall be installed in accordance with Sections R703.3.3 and R703.11.1.

R703.12 Adhered masonry veneer installation. Adhered masonry veneer shall comply with the requirements of Section R703.7.3 and the requirements in Sections 12.1 and 12.3 of TMS 402. Adhered masonry veneer shall be installed in accordance with Section R703.7.1, Article 3.3C of TMS 602 or the manufacturer's instructions.

R703.12.1 Clearances. On exterior stud walls, adhered masonry veneer shall be installed:

1. Minimum of 4 inches (102 mm) above the earth;
2. Minimum of 2 inches (51 mm) above paved areas; or
3. Minimum of $^1/_2$ inch (12.7 mm) above exterior walking surfaces that are supported by the same foundation that supports the exterior wall.

R703.12.2 Flashing at foundation. A corrosion-resistant screed or flashing of a minimum 0.019-inch (0.48 mm) or 26-gage galvanized or plastic with a minimum vertical attachment flange of $3^1/_2$ inches (89 mm) shall be installed to extend a minimum of 1 inch (25 mm) below the foundation plate line on exterior stud walls in accordance with Section R703.4.

R703.12.3 Water-resistive barrier. A water-resistive barrier shall be installed as required by Section R703.2 and shall comply with the requirements of Section R703.7.3. The water-resistive barrier shall lap over the exterior of the attachment flange of the screed or flashing provided in accordance with Section R703.12.2.

R703.13 Insulated vinyl siding. Insulated vinyl siding shall be certified and labeled as conforming to the requirements of ASTM D7793 by an approved quality control agency.

*

TABLE R703.11.2
ADJUSTED MINIMUM DESIGN WIND PRESSURE REQUIREMENT FOR VINYL SIDING

ULTIMATE DESIGN WIND SPEED (MPH)	ADJUSTED MINIMUM DESIGN WIND PRESSURE (ASD) (PSF)[a, b]					
	Case 1: With interior gypsum wallboard[c]			Case 2: Without interior gypsum wallboard[c]		
	Exposure			Exposure		
	B	C	D	B	C	D
110	-44.0	-61.6	-73.1	-62.9	-88.1	-104.4
115	-49.2	-68.9	-81.7	-70.3	-98.4	-116.7
120	-51.8	-72.5	-86.0	-74.0	-103.6	-122.8
130	-62.2	-87.0	-103.2	-88.8	-124.3	-147.4
> 130	Not Allowed[d]					

For SI: 1 inch = 25.4 mm, 1 foot = 304.8 mm, 1 square foot = 0.0929 m^2, 1 mile per hour = 0.447 m/s, 1 pound per square foot = 0.0479 kPa.

a. Linear interpolation is permitted.

b. The table values are based on a maximum 30-foot mean roof height, and effective wind area of 10 square feet Wall Zone 5 (corner), and the ASD design wind pressure from Table R301.2(2) multiplied by the following adjustment factors: 2.6 (Case 1) and 3.7 (Case 2) for wind speeds less than 130 mph and 3.7 (Case 2) for wind speeds greater than 130 mph.

c. Gypsum wallboard, gypsum panel product or equivalent.

d. For the indicated wind speed condition, foam sheathing only on the exterior of frame walls with vinyl siding is not allowed unless the vinyl siding complies with an adjusted minimum design wind pressure requirement as determined in accordance with Note b and the wall assembly is capable of resisting an impact without puncture at least equivalent to that of a wood frame wall with minimum $^7/_{16}$-inch OSB sheathing as tested in accordance with ASTM E1886.

R703.13.1 Insulated vinyl siding and accessories. Insulated vinyl siding and accessories shall be installed in accordance with the manufacturer's installation instructions.

R703.14 Polypropylene siding. Polypropylene siding shall be certified and labeled as conforming to the requirements of ASTM D7254, and those of Section R703.14.2 or Section R703.14.3, by an approved quality control agency.

R703.14.1 Polypropylene siding and accessories. Polypropylene siding and accessories shall be installed in accordance with manufacturer's installation instructions.

R703.14.1.1 Installation. Polypropylene siding shall be installed over and attached to wood structural panel sheathing with minimum thickness of $^7/_{16}$ inch (11.1 mm), or other substrate, composed of wood or wood-based material and fasteners having equivalent withdrawal resistance.

R703.14.1.2 Fastener requirements. Unless otherwise specified in the approved manufacturer's instructions, nails shall be corrosion resistant, with a minimum 0.120-inch (3 mm) shank and minimum 0.313-inch (8 mm) head diameter. Nails shall be a minimum of $1^1/_4$ inches (32 mm) long or as necessary to penetrate sheathing or substrate not less than $^3/_4$ inch (19.1 mm). Where the nail fully penetrates the sheathing or nailable substrate, the end of the fastener shall extend not less than $^1/_4$ inch (6.4 mm) beyond the opposite face of the sheathing or substrate. Staples are not permitted.

R703.14.2 Fire separation. Polypropylene siding shall not be installed on walls with a fire separation distance of less than 5 feet (1524 mm) and walls closer than 10 feet (3048 mm) to a building on another lot.

Exception: Walls perpendicular to the line used to determine the fire separation distance.

R703.14.3 Flame spread index. The certification of the flame spread index shall be accompanied by a test report stating that all portions of the test specimen ahead of the flame front remained in position during the test in accordance with ASTM E84 or UL 723.

R703.15 Cladding attachment over foam sheathing to wood framing. Cladding shall be specified and installed in accordance with Section R703, the cladding manufacturer's approved instructions, including any limitations for use over foam plastic sheathing, or an approved design. In addition, the cladding or furring attachments through foam sheathing to framing shall meet or exceed the minimum fastening requirements of Section R703.15.1, Section R703.15.2, or an approved design for support of cladding weight.

Exceptions:

1. Where the cladding manufacturer has provided approved installation instructions for application over foam sheathing, those requirements shall apply.
2. For exterior insulation and finish systems, refer to Section R703.9.
3. For anchored masonry or stone veneer installed over foam sheathing, refer to Section R703.8.

R703.15.1 Direct attachment. Where cladding is installed directly over foam sheathing without the use of furring, cladding minimum fastening requirements to support the cladding weight shall be as specified in Table R703.15.1.

R703.15.2 Furred cladding attachment. Where wood furring is used to attach cladding over foam sheathing, furring minimum fastening requirements to support the cladding weight shall be as specified in Table R703.15.2. Where placed horizontally, wood furring shall be preservative-treated wood in accordance with Section R317.1 or naturally durable wood and fasteners shall be corrosion resistant in accordance Section R317.3.

R703.16 Cladding attachment over foam sheathing to cold-formed steel framing. Cladding shall be specified and installed in accordance with Section R703, the cladding manufacturer's approved instructions, including any limitations

for use over foam plastic sheathing, or an approved design. In addition, the cladding or furring attachments through foam sheathing to framing shall meet or exceed the minimum fastening requirements of Section R703.16.1, Section R703.16.2 or an approved design for support of cladding weight.

Exceptions:

1. Where the cladding manufacturer has provided approved installation instructions for application over foam sheathing, those requirements shall apply.
2. For exterior insulation and finish systems, refer to Section R703.9.
3. For anchored masonry or stone veneer installed over foam sheathing, refer to Section R703.8.

R703.16.1 Direct attachment. Where cladding is installed directly over foam sheathing without the use of furring, cladding minimum fastening requirements to support the cladding weight shall be as specified in Table R703.16.1.

R703.16.2 Furred cladding attachment. Where steel or wood furring is used to attach cladding over foam sheathing, furring minimum fastening requirements to support the cladding weight shall be as specified in Table R703.16.2. Where placed horizontally, wood furring shall be preservative-treated wood in accordance with Section R317.1 or naturally durable wood and fasteners shall be corrosion resistant in accordance with Section R317.3. Steel furring shall have a minimum G60 galvanized coating.

R703.17 Cladding attachment over foam sheathing to masonry or concrete wall construction. Cladding shall be specified and installed in accordance with Section 703.3 and the cladding manufacturer's instructions or an approved design. Foam sheathing shall be attached to masonry or concrete construction in accordance with the insulation manufacturer's installation instructions or an approved design. Furring and furring attachments through foam sheathing into concrete or masonry substrate shall be designed to resist design loads determined in accordance with Section R301, including support of cladding weight as applicable. Fasteners used to attach cladding or furring through foam sheathing to masonry or concrete substrates shall be approved for application into masonry or concrete material and shall be installed in accordance with the fastener manufacturer's instructions.

Exceptions:

1. Where the cladding manufacturer has provided approved installation instructions for application over foam sheathing and connection to a masonry or concrete substrate, those requirements shall apply.
2. For exterior insulation and finish systems, refer to Section R703.9.
3. For anchored masonry or stone veneer installed over foam sheathing, refer to Section R703.8.

TABLE R703.15.1
CLADDING MINIMUM FASTENING REQUIREMENTS FOR DIRECT ATTACHMENT OVER FOAM PLASTIC SHEATHING TO SUPPORT CLADDING WEIGHT[a]

CLADDING FASTENER THROUGH FOAM SHEATHING	CLADDING FASTENER TYPE AND MINIMUM SIZE[b]	CLADDING FASTENER VERTICAL SPACING (inches)	MAXIMUM THICKNESS OF FOAM SHEATHING[c] (inches)							
			16″ o.c. Fastener Horizontal Spacing				24″ o.c. Fastener Horizontal Spacing			
			Cladding Weight:				Cladding Weight:			
			3 psf	11 psf	18 psf	25 psf	3 psf	11 psf	18 psf	25 psf
Wood framing (minimum $1^1/_4$-inch penetration)	0.113″ diameter nail	6	2.00	1.45	0.75	DR	2.00	0.85	DR	DR
		8	2.00	1.00	DR	DR	2.00	0.55	DR	DR
		12	2.00	0.55	DR	DR	1.85	DR	DR	DR
	0.120″ diameter nail	6	3.00	1.70	0.90	0.55	3.00	1.05	0.50	DR
		8	3.00	1.20	0.60	DR	3.00	0.70	DR	DR
		12	3.00	0.70	DR	DR	2.15	DR	DR	DR
	0.131″ diameter nail	6	4.00	2.15	1.20	0.75	4.00	1.35	0.70	DR
		8	4.00	1.55	0.80	DR	4.00	0.90	DR	DR
		12	4.00	0.90	DR	DR	2.70	0.50	DR	DR
	0.162″ diameter nail	6	4.00	3.55	2.05	1.40	4.00	2.25	1.25	0.80
		8	4.00	2.55	1.45	0.95	4.00	1.60	0.85	0.50
		12	4.00	1.60	0.85	0.50	4.00	0.95	DR	DR

For SI: 1 inch = 25.4 mm, 1 pound per square foot = 0.0479 kPa, 1 pound per square inch = 6.895 kPa.
DR = Design Required.
o.c. = On Center.
a. Wood framing shall be Spruce-pine-fir or any wood species with a specific gravity of 0.42 or greater in accordance with AWC NDS.
b. Nail fasteners shall comply with ASTM F1667, except nail length shall be permitted to exceed ASTM F1667 standard lengths.
c. Foam sheathing shall have a minimum compressive strength of 15 psi in accordance with ASTM C578 or ASTM C1289.

TABLE R703.15.2
FURRING MINIMUM FASTENING REQUIREMENTS FOR APPLICATION OVER FOAM PLASTIC SHEATHING TO SUPPORT CLADDING WEIGHT[a, b]

FURRING MATERIAL	FRAMING MEMBER	FASTENER TYPE AND MINIMUM SIZE	MINIMUM PENETRATION INTO WALL FRAMING (inches)	FASTENER SPACING IN FURRING (inches)	MAXIMUM THICKNESS OF FOAM SHEATHING[d] (inches)							
					16″ o.c. Furring[e]				24″ o.c. Furring[e]			
					Siding Weight:				Siding Weight:			
					3 psf	11 psf	18 psf	25 psf	3 psf	11 psf	18 psf	25 psf
Minimum 1× wood furring[c]	Minimum 2× wood stud	0.131″ diameter nail	$1^1/_4$	8	4.00	2.45	1.45	0.95	4.00	1.60	0.85	DR
				12	4.00	1.60	0.85	DR	4.00	0.95	DR	DR
				16	4.00	1.10	DR	DR	3.05	0.60	DR	DR
		0.162″ diameter nail	$1^1/_4$	8	4.00	4.00	2.45	1.60	4.00	2.75	1.45	0.85
				12	4.00	2.75	1.45	0.85	4.00	1.65	0.75	DR
				16	4.00	1.90	0.95	DR	4.00	1.05	DR	DR
		No.10 wood screw	1	12	4.00	2.30	1.20	0.70	4.00	1.40	0.60	DR
				16	4.00	1.65	0.75	DR	4.00	0.90	DR	DR
				24	4.00	0.90	DR	DR	2.85	DR	DR	DR
		$^1/_4$″ lag screw	$1^1/_2$	12	4.00	2.65	1.50	0.90	4.00	1.65	0.80	DR
				16	4.00	1.95	0.95	0.50	4.00	1.10	DR	DR
				24	4.00	1.10	DR	DR	3.25	0.50	DR	DR

For SI: 1 inch = 25.4 mm, 1 pound per square foot = 0.0479 kPa, 1 pound per square inch = 6.895 kPa.
DR = Design Required.
o.c. = On Center.
a. Wood framing and furring shall be Spruce-pine-fir or any wood species with a specific gravity of 0.42 or greater in accordance with AWC NDS.
b. Nail fasteners shall comply with ASTM F1667, except nail length shall be permitted to exceed ASTM F1667 standard lengths.
c. Where the required cladding fastener penetration into wood material exceeds $^3/_4$ inch and is not more than $1^1/_2$ inches, a minimum 2× wood furring or an approved design shall be used.
d. Foam sheathing shall have a minimum compressive strength of 15 psi in accordance with ASTM C578 or ASTM C1289.
e. Furring shall be spaced not more than 24 inches on center, in a vertical or horizontal orientation. In a vertical orientation, furring shall be located over wall studs and attached with the required fastener spacing. In a horizontal orientation, the indicated 8-inch and 12-inch fastener spacing in furring shall be achieved by use of two fasteners into studs at 16 inches and 24 inches on center, respectively.

TABLE R703.16.1
CLADDING MINIMUM FASTENING REQUIREMENTS FOR DIRECT ATTACHMENT OVER FOAM PLASTIC SHEATHING TO SUPPORT CLADDING WEIGHT[a]

CLADDING FASTENER THROUGH FOAM SHEATHING INTO:	CLADDING FASTENER TYPE AND MINIMUM SIZE[b]	CLADDING FASTENER VERTICAL SPACING (inches)	MAXIMUM THICKNESS OF FOAM SHEATHING[c] (inches)							
			16″ o.c. Fastener Horizontal Spacing				24″ o.c. Fastener Horizontal Spacing			
			Cladding Weight:				Cladding Weight:			
			3 psf	11 psf	18 psf	25 psf	3 psf	11 psf	18 psf	25 psf
Steel framing (minimum penetration of steel thickness + 3 threads)	No. 8 screw into 33-mil steel or thicker	6	3.00	2.95	2.20	1.45	3.00	2.35	1.25	DR
		8	3.00	2.55	1.60	0.60	3.00	1.80	DR	DR
		12	3.00	1.80	DR	DR	3.00	0.65	DR	DR
	No. 10 screw into 33-mil steel	6	4.00	3.50	2.70	1.95	4.00	2.90	1.70	0.55
		8	4.00	3.10	2.05	1.00	4.00	2.25	0.70	DR
		12	4.00	2.25	0.70	DR	3.70	1.05	DR	DR
	No. 10 screw into 43-mil steel or thicker	6	4.00	4.00	4.00	3.60	4.00	4.00	3.45	2.70
		8	4.00	4.00	3.70	3.00	4.00	3.85	2.80	1.80
		12	4.00	3.85	2.80	1.80	4.00	3.05	1.50	DR

For SI: 1 inch = 25.4 mm, 1 mil = 0.0254 mm, 1 pound per square foot = 0.0479 kPa, 1 pound per square inch = 6.895 kPa.
DR = Design Required.
o.c. = On Center.
a. Steel framing shall be minimum 33 ksi steel for 33 mil and 43 mil steel, and 50 ksi steel for 54 mil steel or thicker.
b. Screws shall comply with the requirements of ASTM C1513.
c. Foam sheathing shall have a minimum compressive strength of 15 psi in accordance with ASTM C578 or ASTM C1289.

TABLE R703.16.2
FURRING MINIMUM FASTENING REQUIREMENTS FOR APPLICATION OVER FOAM PLASTIC SHEATHING TO SUPPORT CLADDING WEIGHT[a]

FURRING MATERIAL	FRAMING MEMBER	FASTENER TYPE AND MINIMUM SIZE[b]	MINIMUM PENETRATION INTO WALL FRAMING (Inches)	FASTENER SPACING IN FURRING (inches)	MAXIMUM THICKNESS OF FOAM SHEATHING[d] (Inches)							
					16″ o.c. Furring[e]				24″ o.c. Furring[e]			
					Cladding Weight:				Cladding Weight:			
					3 psf	11 psf	18 psf	25 psf	3 psf	11 psf	18 psf	25 psf
Minimum 33-mil steel furring or minimum 1× wood furring[c]	33-mil steel stud	No. 8 screw	Steel thickness + 3 threads	12	3.00	1.80	DR	DR	3.00	0.65	DR	DR
				16	3.00	1.00	DR	DR	2.85	DR	DR	DR
				24	2.85	DR	DR	DR	2.20	DR	DR	DR
		No. 10 screw	Steel thickness + 3 threads	12	4.00	2.25	0.70	DR	3.70	1.05	DR	DR
				16	3.85	1.45	DR	DR	3.40	DR	DR	DR
				24	3.40	DR	DR	DR	2.70	DR	DR	DR
	43-mil or thicker steel stud	No. 8 Screw	Steel thickness + 3 threads	12	3.00	1.80	DR	DR	3.00	0.65	DR	DR
				16	3.00	1.00	DR	DR	2.85	DR	DR	DR
				24	2.85	DR	DR	DR	2.20	DR	DR	DR
		No. 10 screw	Steel thickness + 3 threads	12	4.00	3.85	2.80	1.80	4.00	3.05	1.50	DR
				16	4.00	3.30	1.95	0.60	4.00	2.25	DR	DR
				24	4.00	2.25	DR	DR	4.00	0.65	DR	DR

For SI: 1 inch = 25.4 mm, 1 mil = 0.0254 mm, 1 pound per square foot = 0.0479 kPa, 1 pound per square inch = 6.895 kPa.

DR = Design Required.

o.c. = On Center.

a. Wood furring shall be Spruce-pine-fir or any softwood species with a specific gravity of 0.42 or greater. Steel furring shall be minimum 33-ksi steel. Steel studs shall be minimum 33-ksi steel for 33-mil and 43-mil thickness, and 50-ksi steel for 54-mil steel or thicker.

b. Screws shall comply with the requirements of ASTM C1513.

c. Where the required cladding fastener penetration into wood material exceeds $^3/_4$ inch and is not more than $1^1/_2$ inches, a minimum 2-inch nominal wood furring or an approved design shall be used.

d. Foam sheathing shall have a minimum compressive strength of 15 psi in accordance with ASTM C578 or ASTM C1289.

e. Furring shall be spaced not more than 24 inches (610 mm) on center, in a vertical or horizontal orientation. In a vertical orientation, furring shall be located over wall studs and attached with the required fastener spacing. In a horizontal orientation, the indicated 8-inch and 12-inch fastener spacing in furring shall be achieved by use of two fasteners into studs at 16 inches and 24 inches on center, respectively.

CALIFORNIA RESIDENTIAL CODE – MATRIX ADOPTION TABLE
CHAPTER 8 – ROOF-CEILING CONSTRUCTION

(Matrix Adoption Tables are nonregulatory, intended only as an aid to the code user. See Chapter 1 for state agency authority and building applications.)

Adopting agency	BSC	BSC-CG	SFM	HCD			DSA			OSHPD						BSCC	DPH	AGR	DWR	CEC	CA	SL	SLC
				1	2	1/AC	AC	SS	SS/CC	1	1R	2	3	4	5								
Adopt entire chapter																							
Adopt entire chapter as amended (amended sections listed below)				X																			
Adopt only those sections that are listed below			X																				
Chapter / Section																							
R802.1.1 *Note*				X																			
R802.1.5 - R802.1.5.10			X																				
R802.10.2				X																			
R806.2				X																			
R806.5				X																			
Table R806.5				X																			
R807.1				X																			

CHAPTER 8

ROOF-CEILING CONSTRUCTION

User note:

About this chapter: *Chapter 8 addresses the design and construction of roof-ceiling systems. This chapter contains two roof-ceiling framing systems: wood framing and cold-formed steel framing. Allowable span tables are provided to simplify the selection of rafter and ceiling joist size for wood roof framing and cold-formed steel framing. Chapter 8 also provides requirements for the application of ceiling finishes, the proper ventilation of concealed spaces in roofs (for example, enclosed attics and rafter spaces), unvented attic assemblies and attic access.*

SECTION R801
GENERAL

R801.1 Application. The provisions of this chapter shall control the design and construction of the roof-ceiling system for buildings.

R801.2 Requirements. Roof and ceiling construction shall be capable of accommodating all loads imposed in accordance with Section R301 and of transmitting the resulting loads to the supporting structural elements.

R801.3 Roof drainage. In areas where expansive soils or collapsible soils are known to exist, all dwellings shall have a controlled method of water disposal from roofs that will collect and discharge roof drainage to the ground surface not less than 5 feet (1524 mm) from foundation walls or to an approved drainage system.

SECTION R802
WOOD ROOF FRAMING

R802.1 General. Wood and wood-based products used for load-supporting purposes shall conform to the applicable provisions of this section.

R802.1.1 Sawn lumber. Sawn lumber shall be identified by a grade mark of an accredited lumber grading or inspection agency and have design values certified by an accreditation body that complies with DOC PS 20. In lieu of a grade mark, a certificate of inspection issued by a lumber grading or inspection agency meeting the requirements of this section shall be accepted.

Note: See Section R301.1.1.1 for limited-density owner-built rural dwellings.

R802.1.1.1 End-jointed lumber. Approved end-jointed lumber identified by a grade mark conforming to Section R802.1.1 shall be permitted to be used interchangeably with solid-sawn members of the same species and grade. End-jointed lumber used in an assembly required elsewhere in this code to have a fire-resistance rating shall have the designation "Heat-Resistant Adhesive" or "HRA" included in its grade mark.

R802.1.2 Structural glued-laminated timbers. Glued-laminated timbers shall be manufactured and identified as required in ANSI A190.1, ANSI 117 and ASTM D3737.

R802.1.3 Structural log members. Structural log members shall comply with the provisions of ICC 400.

R802.1.4 Structural composite lumber. Structural capacities for structural composite lumber shall be established and monitored in accordance with ASTM D5456.

R802.1.5 Fire-retardant-treated wood. Fire-retardant-treated wood (FRTW) is any wood product that, when impregnated with chemicals by a pressure process or other means during manufacture, shall have, when tested in accordance with ASTM E84 or UL 723, a listed flame spread index of 25 or less and does not show evidence of significant progressive combustion where the test is continued for an additional 20-minute period. In addition, the flame front shall not progress more than 10.5 feet (3200 mm) beyond the center line of the burners at any time during the test.

R802.1.5.1 Pressure process. For wood products impregnated with chemicals by a pressure process, the process shall be performed in closed vessels under pressures not less than 50 pounds per square inch gauge (psig) (344.7 kPa).

R802.1.5.2 Other means during manufacture. For wood products produced by other means during manufacture the treatment shall be an integral part of the manufacturing process of the wood product. The treatment shall provide permanent protection to all surfaces of the wood product.

R802.1.5.3 Testing. For wood products produced by other means during manufacture, other than a pressure process, all sides of the wood product shall be tested in accordance with and produce the results required in Section R802.1.5. Testing of only the front and back faces of wood structural panels shall be permitted.

R802.1.5.4 Labeling. In addition to the labels required by Section 802.1.1 for sawn lumber and Section 803.2.1 for wood structural panels, each piece of fire-retardant-treated lumber and wood structural panel shall be labeled. The label shall contain:

1. The identification mark of an approved agency in accordance with Section 1703.5 of the *California Building Code.*
2. Identification of the treating manufacturer.
3. The name of the fire-retardant treatment.

4. The species of wood treated.
5. Flame spread index and smoke-developed index.
6. Method of drying after treatment.
7. Conformance to applicable standards in accordance with Sections R802.1.5.5 through R802.1.5.10.
8. For FRTW exposed to weather, or a damp or wet location, the words "No increase in the listed classification when subjected to the Standard Rain Test" (ASTM D2898).

R802.1.5.5 Strength adjustments. Design values for untreated lumber and wood structural panels as specified in Section R802.1 shall be adjusted for fire-retardant-treated wood. Adjustments to design values shall be based on an approved method of investigation that takes into consideration the effects of the anticipated temperature and humidity to which the fire-retardant-treated wood will be subjected, the type of treatment and redrying procedures.

R802.1.5.6 Wood structural panels. The effect of treatment and the method of redrying after treatment, and exposure to high temperatures and high humidities on the flexure properties of fire-retardant-treated softwood plywood shall be determined in accordance with ASTM D5516. The test data developed by ASTM D5516 shall be used to develop adjustment factors, maximum loads and spans, or both for untreated plywood design values in accordance with ASTM D6305. Each manufacturer shall publish the allowable maximum loads and spans for service as floor and roof sheathing for their treatment.

R802.1.5.7 Lumber. For each species of wood treated, the effect of the treatment and the method of redrying after treatment and exposure to high temperatures and high humidities on the allowable design properties of fire-retardant-treated lumber shall be determined in accordance with ASTM D5664. The test data developed by ASTM D5664 shall be used to develop modification factors for use at or near room temperature and at elevated temperatures and humidity in accordance with ASTM D6841. Each manufacturer shall publish the modification factors for service at temperatures of not less than 80°F (27°C) and for roof framing. The roof framing modification factors shall take into consideration the climatological location.

R802.1.5.8 Exposure to weather. Where fire-retardant-treated wood is exposed to weather or damp or wet locations, it shall be identified as "Exterior" to indicate there is not an increase in the listed flame spread index as defined in Section R802.1.5 when subjected to ASTM D2898.

R802.1.5.9 Interior applications. Interior fire-retardant-treated wood shall have a moisture content of not over 28 percent when tested in accordance with ASTM D3201 procedures at 92-percent relative humidity. Interior fire-retardant-treated wood shall be tested in accordance with Section R802.1.5.6 or R802.1.5.7. Interior fire-retardant-treated wood designated as Type A shall be tested in accordance with the provisions of this section.

R802.1.5.10 Moisture content. Fire-retardant-treated wood shall be dried to a moisture content of 19 percent or less for lumber and 15 percent or less for wood structural panels before use. For wood kiln dried after treatment (KDAT) the kiln temperatures shall not exceed those used in kiln drying the lumber and plywood submitted for the tests described in Section R802.1.5.6 for plywood and R802.1.5.7 for lumber.

R802.1.6 Cross-laminated timber. Cross-laminated timber shall be manufactured and identified as required by ANSI/APA PRG 320.

R802.1.7 Engineered wood rim board. Engineered wood rim boards shall conform to ANSI/APA PRR 410 or shall be evaluated in accordance with ASTM D7672. Structural capacities shall be in accordance with ANSI/APA PRR 410 or established in accordance with ASTM D7672. Rim boards conforming to ANSI/APA PRR 410 shall be marked in accordance with that standard.

R802.1.8 Prefabricated wood I-joists. Structural capacities and design provisions for prefabricated wood I-joists shall be established and monitored in accordance with ASTM D5055.

R802.2 Design and construction. The roof and ceiling assembly shall provide continuous ties across the structure to prevent roof thrust from being applied to the supporting walls. The assembly shall be designed and constructed in accordance with the provisions of this chapter and Figures R606.11(1), R606.11(2) and R606.11(3) or in accordance with AWC NDS.

R802.3 Ridge. A ridge board used to connect opposing rafters shall be not less than 1 inch (25 mm) nominal thickness and not less in depth than the cut end of the rafter. Where ceiling joist or rafter ties do not provide continuous ties across the structure, a ridge beam shall be provided and supported on each end by a wall or girder.

R802.4 Rafters. Rafters shall be in accordance with this section.

R802.4.1 Rafter size. Rafters shall be sized based on the rafter spans in Tables R802.4.1(1) through R802.4.1(8). Rafter spans shall be measured along the horizontal projection of the rafter. For other grades and species and for other loading conditions, refer to the AWC STJR.

R802.4.2 Framing details. Rafters shall be framed not more than $1^1/_2$ inches (38 mm) offset from each other to a ridge board or directly opposite from each other with a collar tie, gusset plate or ridge strap in accordance with Table R602.3(1). Rafters shall be nailed to the top wall plates in accordance with Table R602.3(1) unless the roof assembly is required to comply with the uplift requirements of Section R802.11.

TABLE R802.4.1(1)
RAFTER SPANS FOR COMMON LUMBER SPECIES
(Roof live load = 20 psf, ceiling not attached to rafters, L/Δ = 180)

RAFTER SPACING (inches)	SPECIES AND GRADE		DEAD LOAD = 10 psf					DEAD LOAD = 20 psf				
			2 × 4	2 × 6	2 × 8	2 × 10	2 × 12	2 × 4	2 × 6	2 × 8	2 × 10	2 × 12
			Maximum rafter spans[a]									
			(feet - inches)	(feet - inches)	(feet - inches)	(feet - inches)	(feet - inches)	(feet - inches)	(feet - inches)	(feet - inches)	(feet - inches)	(feet - inches)
12	Douglas fir-larch	SS	11-6	18-0	23-9	Note b	Note b	11-6	18-0	23-9	Note b	Note b
	Douglas fir-larch	#1	11-1	17-4	22-5	Note b	Note b	10-6	15-4	19-5	23-9	Note b
	Douglas fir-larch	#2	10-10	16-10	21-4	26-0	Note b	10-0	14-7	18-5	22-6	26-0
	Douglas fir-larch	#3	8-9	12-10	16-3	19-10	23-0	7-7	11-1	14-1	17-2	19-11
	Hem-fir	SS	10-10	17-0	22-5	Note b	Note b	10-10	17-0	22-5	Note b	Note b
	Hem-fir	#1	10 -7	16-8	22-0	Note b	Note b	10-4	15-2	19-2	23-5	Note b
	Hem-fir	#2	10-1	15-11	20-8	25-3	Note b	9-8	14-2	17-11	21-11	25-5
	Hem-fir	#3	8-7	12-6	15-10	19-5	22-6	7-5	10-10	13-9	16-9	19-6
	Southern pine	SS	11-3	17-8	23-4	Note b	Note b	11-3	17-8	23-4	Note b	Note b
	Southern pine	#1	10-10	17-0	22-5	Note b	Note b	10-6	15-8	19-10	23-2	Note b
	Southern pine	#2	10-4	15-7	19-8	23-5	Note b	9-0	13-6	17-1	20-3	23-10
	Southern pine	#3	8-0	11-9	14-10	18-0	21-4	6-11	10-2	12-10	15-7	18-6
	Spruce-pine-fir	SS	10-7	16-8	21-11	Note b	Note b	10-7	16-8	21-9	Note b	Note b
	Spruce-pine-fir	#1	10-4	16-3	21-0	25-8	Note b	9-10	14-4	18-2	22-3	25-9
	Spruce-pine-fir	#2	10-4	16-3	21-0	25-8	Note b	9-10	14-4	18-2	22-3	25-9
	Spruce-pine-fir	#3	8-7	12-6	15-10	19-5	22-6	7-5	10-10	13-9	16-9	19-6
16	Douglas fir-larch	SS	10-5	16-4	21-7	Note b	Note b	10-5	16-3	20-7	25-2	Note b
	Douglas fir-larch	#1	10-0	15-4	19-5	23-9	Note b	9-1	13-3	16-10	20-7	23-10
	Douglas fir-larch	#2	9-10	14-7	18-5	22-6	26-0	8-7	12-7	16-0	19-6	22-7
	Douglas fir-larch	#3	7-7	11-1	14-1	17-2	19-11	6-7	9-8	12-12	14-11	17-3
	Hem-fir	SS	9-10	15-6	20-5	Note b	Note b	9-10	15-6	19-11	24-4	Note b
	Hem-fir	#1	9-8	15-2	19-2	23-5	Note b	9-0	13-1	16-7	20-4	23-7
	Hem-fir	#2	9-2	14-2	17-11	21-11	25-5	8-5	12-3	15-6	18-11	22-0
	Hem-fir	#3	7-5	10-10	13-9	16-9	19-6	6-5	9-5	11-11	14-6	16-10
	Southern pine	SS	10-3	16-1	21-2	Note b	Note b	10-3	16-1	21-2	25-7	Note b
	Southern pine	#1	9-10	15-6	19-10	23-2	Note b	9-1	13-7	17-2	20-1	23-10
	Southern pine	#2	9-0	13-6	17-1	20-3	23-10	7-9	11-8	14-9	17-6	20-8
	Southern pine	#3	6-11	10-2	12-10	15-7	18-6	6-0	8-10	11-2	13-6	16-0
	Spruce-pine-fir	SS	9-8	15-2	19-11	25-5	Note b	9-8	14-10	18-10	23-0	Note b
	Spruce-pine-fir	#1	9-5	14-4	18-2	22-3	25-9	8-6	12-5	15-9	19-3	22-4
	Spruce-pine-fir	#2	9-5	14-4	18-2	22-3	25-9	8-6	12-5	15-9	19-3	22-4
	Spruce-pine-fir	#3	7-5	10-10	13-9	16-9	19-6	6-5	9-5	11-11	14-6	16-10
19.2	Douglas fir-larch	SS	9-10	15-5	20-4	25-11	Note b	9-10	14-10	18-10	23-0	Note b
	Douglas fir-larch	#1	9-5	14-0	17-9	21-8	25-2	8-4	12-2	15-4	18-9	21-9
	Douglas fir-larch	#2	9-1	13-3	16-10	20-7	23-10	7-10	11-6	14-7	17-10	20-8
	Douglas fir-larch	#3	6-11	10-2	12-10	15-8	18-3	6-0	8-9	11-2	12-7	15-9
	Hem-fir	SS	9-3	14-7	19-2	24-6	Note b	9-3	14-4	18-2	22-3	25-9
	Hem-fir	#1	9-1	13-10	17-6	21-5	24-10	8-2	12-0	15-2	18-6	21-6
	Hem-fir	#2	8-8	12-11	16-4	20-0	23-2	7-8	11-2	14-2	17-4	20-1
	Hem-fir	#3	6-9	9-11	12-7	15-4	17-9	5-10	8-7	10-10	13-3	15-5
	Southern pine	SS	9-8	15-2	19-11	25-5	Note b	9-8	15-2	19-7	23-4	Note b
	Southern pine	#1	9-3	14-3	18-1	21-2	25-2	8-4	12-4	15-8	18-4	21-9
	Southern pine	#2	8-2	12-3	15-7	18-6	21-9	7-1	10-8	13-6	16-0	18-10
	Southern pine	#3	6-4	9-4	11-9	14-3	16-10	5-6	8-1	10-2	12-4	14-7
	Spruce-pine-fir	SS	9-1	14-3	18-9	23-11	Note b	9-1	13-7	17-2	21-0	24-4
	Spruce-pine-fir	#1	8-10	13-1	16-7	20-3	23-6	7-9	11-4	14-4	17-7	20-4
	Spruce-pine-fir	#2	8-10	13-1	16-7	20-3	23-6	7-9	11-4	14-4	17-7	20-4
	Spruce-pine-fir	#3	6-9	9-11	12-7	15-4	17-9	5-10	8-7	10-10	13-3	15-5

(continued)

TABLE R802.4.1(1)—continued
RAFTER SPANS FOR COMMON LUMBER SPECIES
(Roof live load = 20 psf, ceiling not attached to rafters, L/Δ = 180)

RAFTER SPACING (inches)	SPECIES AND GRADE		DEAD LOAD = 10 psf					DEAD LOAD = 20 psf				
			2 × 4	2 × 6	2 × 8	2 × 10	2 × 12	2 × 4	2 × 6	2 × 8	2 × 10	2 × 12
			Maximum rafter spans[a]									
			(feet - inches)	(feet - inches)	(feet - inches)	(feet - inches)	(feet - inches)	(feet - inches)	(feet - inches)	(feet - inches)	(feet - inches)	(feet - inches)
24	Douglas fir-larch	SS	9-1	14-4	18-10	23-9	Note b	9-1	13-3	16-10	20-7	23-10
	Douglas fir-larch	#1	8-7	12-6	15-10	19-5	22-6	7-5	10-10	13-9	16-9	19-6
	Douglas fir-larch	#2	8-2	11-11	15-1	18-5	21-4	7-0	10-4	13-0	15-11	18-6
	Douglas fir-larch	#3	6-2	9-1	11-6	14-1	16-3	5-4	7-10	10-0	12-2	14-1
	Hem-fir	SS	8-7	13-6	17-10	22-9	Note b	8-7	12-10	16-3	19-10	23-0
	Hem-fir	#1	8-5	12-4	15-8	19-2	22-2	7-4	10-9	13-7	16-7	19-3
	Hem-fir	#2	7-11	11-7	14-8	17-10	20-9	6-10	10-0	12-8	15-6	17-11
	Hem-fir	#3	6-1	8-10	11-3	13-8	15-11	5-3	7-8	9-9	11-10	13-9
	Southern pine	SS	8-11	14-1	18-6	23-8	Note b	8-11	13-10	17-6	20-10	24-8
	Southern pine	#1	8-7	12-9	16-2	18-11	22-6	7-5	11-1	14-0	16-5	19-6
	Southern pine	#2	7-4	11-0	13-11	16-6	19-6	6-4	9-6	12-1	14-4	16-10
	Southern pine	#3	5-8	8-4	10-6	12-9	15-1	4-11	7-3	9-1	11-0	13-1
	Spruce-pine-fir	SS	8-5	13-3	17-5	21-8	25-2	8-4	12-2	15-4	18-9	21-9
	Spruce-pine-fir	#1	8-0	11-9	14-10	18-2	21-0	6-11	10-2	12-10	15-8	18-3
	Spruce-pine-fir	#2	8-0	11-9	14-10	18-2	21-0	6-11	10-2	12-10	15-8	18-3
	Spruce-pine-fir	#3	6-1	8-10	11-3	13-8	15-11	5-3	7-8	9-9	11-10	13-9

Check sources for availability of lumber in lengths greater than 20 feet.

For SI: 1 inch = 25.4 mm, 1 foot = 304.8 mm, 1 pound per square foot = 0.0479 kPa.

a. The tabulated rafter spans assume that ceiling joists are located at the bottom of the attic space or that some other method of resisting the outward push of the rafters on the bearing walls, such as rafter ties, is provided at that location. Where ceiling joists or rafter ties are located higher in the attic space, the rafter spans shall be multiplied by the following factors:

H_C/H_R	Rafter Span Adjustment Factor
1/3	0.67
1/4	0.76
1/5	0.83
1/6	0.90
1/7.5 or less	1.00

where:

H_C = Height of ceiling joists or rafter ties measured vertically above the top of the rafter support walls.

H_R = Height of roof ridge measured vertically above the top of the rafter support walls.

b. Span exceeds 26 feet in length.

TABLE R802.4.1(2)
RAFTER SPANS FOR COMMON LUMBER SPECIES
(Roof live load = 20 psf, ceiling attached to rafters, L/Δ = 240)

RAFTER SPACING (Inches)	SPECIES AND GRADE		DEAD LOAD = 10 psf					DEAD LOAD = 20 psf				
			2 × 4	2 × 6	2 × 8	2 × 10	2 × 12	2 × 4	2 × 6	2 × 8	2 × 10	2 × 12
			Maximum rafter spans[a]									
			(feet - inches)	(feet - inches)	(feet - inches)	(feet - inches)	(feet - inches)	(feet - inches)	(feet - inches)	(feet - inches)	(feet - inches)	(feet - inches)
12	Douglas fir-larch	SS	10-5	16-4	21-7	Note b	Note b	10-5	16-4	21-7	Note b	Note b
	Douglas fir-larch	#1	10-0	15-9	20-10	Note b	Note b	10-0	15-4	19-5	23-9	Note b
	Douglas fir-larch	#2	9-10	15-6	20-5	26-0	Note b	9-10	14-7	18-5	22-6	26-0
	Douglas fir-larch	#3	8-9	12-10	16-3	19-10	23-0	7-7	11-1	14-1	17-2	19-11
	Hem-fir	SS	9-10	15-6	20-5	Note b	Note b	9-10	15-6	20-5	Note b	Note b
	Hem-fir	#1	9-8	15-2	19-11	25-5	Note b	9-8	15-2	19-2	23-5	Note b
	Hem-fir	#2	9-2	14-5	19-0	24-3	Note b	9-2	14-2	17-11	21-11	25-5
	Hem-fir	#3	8-7	12-6	15-10	19-5	22-6	7-5	10-10	13-9	16-9	19-6
	Southern pine	SS	10-3	16-1	21-2	Note b	Note b	10-3	16-1	21-2	Note b	Note b
	Southern pine	#1	9-10	15-6	20-5	Note b	Note b	9-10	15-6	19-10	23-2	Note b
	Southern pine	#2	9-5	14-9	19-6	23-5	Note b	9-0	13-6	17-1	20-3	23-10
	Southern pine	#3	8-0	11-9	14-10	18-0	21-4	6-11	10-2	12-10	15-7	18-6
	Spruce-pine-fir	SS	9-8	15-2	19-11	25-5	Note b	9-8	15-2	19-11	25-5	Note b
	Spruce-pine-fir	#1	9-5	14-9	19-6	24-10	Note b	9-5	14-4	18-2	22-3	25-9
	Spruce-pine-fir	#2	9-5	14-9	19-6	24-10	Note b	9-5	14-4	18-2	22-3	25-9
	Spruce-pine-fir	#3	8-7	12-6	15-10	19-5	22-6	7-5	10-10	13-9	16-9	19-6
16	Douglas fir-larch	SS	9-6	14-11	19-7	25-0	Note b	9-6	14-11	19-7	25-0	Note b
	Douglas fir-larch	#1	9-1	14-4	18-11	23-9	Note b	9-1	13-3	16-10	20-7	23-10
	Douglas fir-larch	#2	8-11	14-1	18-5	22-6	26-0	8-7	12-7	16-0	19-6	22-7
	Douglas fir-larch	#3	7-7	11-1	14-1	17-2	19-11	6-7	9-8	12-2	14-11	17-3
	Hem-fir	SS	8-11	14-1	18-6	23-8	Note b	8-11	14-1	18-6	23-8	Note b
	Hem-fir	#1	8-9	13-9	18-1	23-1	Note b	8-9	13-1	16-7	20-4	23-7
	Hem-fir	#2	8-4	13-1	17-3	21-11	25-5	8-4	12-3	15-6	18-11	22-0
	Hem-fir	#3	7-5	10-10	13-9	16-9	19-6	6-5	9-5	11-11	14-6	16-10
	Southern pine	SS	9-4	14-7	19-3	24-7	Note b	9-4	14-7	19-3	24-7	Note b
	Southern pine	#1	8-11	14-1	18-6	23-2	Note b	8-11	13-7	17-2	20-1	23-10
	Southern pine	#2	8-7	13-5	17-1	20-3	23-10	7-9	11-8	14-9	17-6	20-8
	Southern pine	#3	6-11	10-2	12-10	15-7	18-6	6-0	8-10	11-2	13-6	16-0
	Spruce-pine-fir	SS	8-9	13-9	18-1	23-1	Note b	8-9	13-9	18-1	23-0	Note b
	Spruce-pine-fir	#1	8-7	13-5	17-9	22-3	25-9	8-6	12-5	15-9	19-3	22-4
	Spruce-pine-fir	#2	8-7	13-5	17-9	22-3	25-9	8-6	12-5	15-9	19-3	22-4
	Spruce-pine-fir	#3	7-5	10-10	13-9	16-9	19-6	6-5	9-5	11-11	14-6	16-10
19.2	Douglas fir-larch	SS	8-11	14-0	18-5	23-7	Note b	8-11	14-0	18-5	23-0	Note b
	Douglas fir-larch	#1	8-7	13-6	17-9	21-8	25-2	8-4	12-2	15-4	18-9	21-9
	Douglas fir-larch	#2	8-5	13-3	16-10	20-7	23-10	7-10	11-6	14-7	17-10	20-8
	Douglas fir-larch	#3	6-11	10-2	12-10	15-8	18-3	6-0	8-9	11-2	13-7	15-9
	Hem-fir	SS	8-5	13-3	17-5	22-3	Note b	8-5	13-3	17-5	22-3	25-9
	Hem-fir	#1	8-3	12-11	17-1	21-5	24-10	8-2	12-0	15-2	18-6	21-6
	Hem-fir	#2	7-10	12-4	16-3	20-0	23-2	7-8	11-2	14-2	17-4	20-1
	Hem-fir	#3	6-9	9-11	12-7	15-4	17-9	5-10	8-7	10-10	13-3	15-5

(continued)

TABLE R802.4.1(2)—continued
RAFTER SPANS FOR COMMON LUMBER SPECIES
(Roof live load = 20 psf, ceiling attached to rafters, L/Δ = 240)

RAFTER SPACING (inches)	SPECIES AND GRADE		DEAD LOAD = 10 psf					DEAD LOAD = 20 psf				
			2 × 4	2 × 6	2 × 8	2 × 10	2 × 12	2 × 4	2 × 6	2 × 8	2 × 10	2 × 12
			Maximum rafter spans[a]									
			(feet - inches)	(feet - inches)	(feet - inches)	(feet - inches)	(feet - inches)	(feet - inches)	(feet - inches)	(feet - inches)	(feet - inches)	(feet - inches)
19.2	Southern pine	SS	8-9	13-9	18-2	23-1	Note b	8-9	13-9	18-2	23-1	Note b
	Southern pine	#1	8-5	13-3	17-5	21-2	25-2	8-4	12-4	15-8	18-4	21-9
	Southern pine	#2	8-1	12-3	15-7	18-6	21-9	7-1	10-8	13-6	16-0	18-10
	Southern pine	#3	6-4	9-4	11-9	14-3	16-10	5-6	8-1	10-2	12-4	14-7
	Spruce-pine-fir	SS	8-3	12-11	17-1	21-9	Note b	8-3	12-11	17-1	21-0	24-4
	Spruce-pine-fir	#1	8-1	12-8	16-7	20-3	23-6	7-9	11-4	14-4	17-7	20-4
	Spruce-pine-fir	#2	8-1	12-8	16-7	20-3	23-6	7-9	11-4	14-4	17-7	20-4
	Spruce-pine-fir	#3	6-9	9-11	12-7	15-4	17-9	5-10	8-7	10-10	13-3	15-5
24	Douglas fir-larch	SS	8-3	13-0	17-2	21-10	Note b	8-3	13-0	16-10	20-7	23-10
	Douglas fir-larch	#1	8-0	12-6	15-10	19-5	22-6	7-5	10-10	13-9	16-9	19-6
	Douglas fir-larch	#2	7-10	11-11	15-1	18-5	21-4	7-0	10-4	13-0	15-11	18-6
	Douglas fir-larch	#3	6-2	9-1	11-6	14-1	16-3	5-4	7-10	10-0	12-2	14-1
	Hem-fir	SS	7-10	12-3	16-2	20-8	25-1	7-10	12-3	16-2	19-10	23-0
	Hem-fir	#1	7-8	12-0	15-8	19-2	22-2	7-4	10-9	13-7	16-7	19-3
	Hem-fir	#2	7-3	11-5	14-8	17-10	20-9	6-10	10-0	12-8	15-6	17-11
	Hem-fir	#3	6-1	8-10	11-3	13-8	15-11	5-3	7-8	9-9	11-10	13-9
	Southern pine	SS	8-1	12-9	16-10	21-6	Note b	8-1	12-9	16-10	20-10	24-8
	Southern pine	#1	7-10	12-3	16-2	18-11	22-6	7-5	11-1	14-0	16-5	19-6
	Southern pine	#2	7-4	11-0	13-11	16-6	19-6	6-4	9-6	12-1	14-4	16-10
	Southern pine	#3	5-8	8-4	10-6	12-9	15-1	4-11	7-3	9-1	11-0	13-1
	Spruce-pine-fir	SS	7-8	12-0	15-10	20-2	24-7	7-8	12-0	15-4	18-9	21-9
	Spruce-pine-fir	#1	7-6	11-9	14-10	18-2	21-0	6-11	10-2	12-10	15-8	18-3
	Spruce-pine-fir	#2	7-6	11-9	14-10	18-2	21-0	6-11	10-2	12-10	15-8	18-3
	Spruce-pine-fir	#3	6-1	8-10	11-3	13-8	15-11	5-3	7-8	9-9	11-10	13-9

Check sources for availability of lumber in lengths greater than 20 feet.

For SI: 1 inch = 25.4 mm, 1 foot = 304.8 mm, 1 pound per square foot = 0.0479 kPa.

a. The tabulated rafter spans assume that ceiling joists are located at the bottom of the attic space or that some other method of resisting the outward push of the rafters on the bearing walls, such as rafter ties, is provided at that location. Where ceiling joists or rafter ties are located higher in the attic space, the rafter spans shall be multiplied by the following factors:

H_C/H_R	Rafter Span Adjustment Factor
1/3	0.67
1/4	0.76
1/5	0.83
1/6	0.90
1/7.5 or less	1.00

where:

H_C = Height of ceiling joists or rafter ties measured vertically above the top of the rafter support walls.

H_R = Height of roof ridge measured vertically above the top of the rafter support walls.

b. Span exceeds 26 feet in length.

TABLE R802.4.1(3)
RAFTER SPANS FOR COMMON LUMBER SPECIES
(Ground snow load = 30 psf, ceiling not attached to rafters, L/Δ = 180)

RAFTER SPACING (inches)	SPECIES AND GRADE		DEAD LOAD = 10 psf					DEAD LOAD = 20 psf				
			2 × 4	2 × 6	2 × 8	2 × 10	2 × 12	2 × 4	2 × 6	2 × 8	2 × 10	2 × 12
			Maximum rafter spans[a]									
			(feet - inches)	(feet - inches)	(feet - inches)	(feet - inches)	(feet - inches)	(feet - inches)	(feet - inches)	(feet - inches)	(feet - inches)	(feet - inches)
12	Douglas fir-larch	SS	10-0	15-9	20-9	Note b	Note b	10-0	15-9	20-5	24-11	Note b
	Douglas fir-larch	#1	9-8	14-9	18-8	22-9	Note b	9-0	13-2	16-8	20-4	23-7
	Douglas fir-larch	#2	9-6	14-0	17-8	21-7	25-1	8-6	12-6	15-10	19-4	22-5
	Douglas fir-larch	#3	7-3	10-8	13-6	16-6	19-2	6-6	9-6	12-1	14-9	17-1
	Hem-fir	SS	9-6	14-10	19-7	25-0	Note b	9-6	14-10	19-7	24-1	Note b
	Hem-fir	#1	9-3	14-6	18-5	22-6	26-0	8-11	13-0	16-6	20-1	23-4
	Hem-fir	#2	8-10	13-7	17-2	21-0	24-4	8-4	12-2	15-4	18-9	21-9
	Hem-fir	#3	7-1	10-5	13-2	16-1	18-8	6-4	9-4	11-9	14-5	16-8
	Southern pine	SS	9-10	15-6	20-5	Note b	Note b	9-10	15-6	20-5	25-4	Note b
	Southern pine	#1	9-6	14-10	19-0	22-3	Note b	9-0	13-5	17-0	19-11	23-7
	Southern pine	#2	8-7	12-11	16-4	19-5	22-10	7-8	11-7	14-8	17-4	20-5
	Southern pine	#3	6-7	9-9	12-4	15-0	17-9	5-11	8-9	11-0	13-5	15-10
	Spruce-pine-fir	SS	9-3	14-7	19-2	24-6	Note b	9-3	14-7	18-8	22-9	Note b
	Spruce-pine-fir	#1	9-1	13-9	17-5	21-4	24-8	8-5	12-4	15-7	19-1	22-1
	Spruce-pine-fir	#2	9-1	13-9	17-5	21-4	24-8	8-5	12-4	15-7	19-1	22-1
	Spruce-pine-fir	#3	7-1	10-5	13-2	16-1	18-8	6-4	9-4	11-9	14-5	16-8
16	Douglas fir-larch	SS	9-1	14-4	18-10	24-1	Note b	9-1	14-0	17-8	21-7	25-1
	Douglas fir-larch	#1	8-9	12-9	16-2	19-9	22-10	7-10	11-5	14-5	17-8	20-5
	Douglas fir-larch	#2	8-3	12-1	15-4	18-9	21-8	7-5	10-10	13-8	16-9	19-5
	Douglas fir-larch	#3	6-4	9-3	11-8	14-3	16-7	5-8	8-3	10-6	12-9	14-10
	Hem-fir	SS	8-7	13-6	17-10	22-9	Note b	8-7	13-6	17-1	20-10	24-2
	Hem-fir	#1	8-5	12-7	15-11	19-6	22-7	7-8	11-3	14-3	17-5	20-2
	Hem-fir	#2	8-0	11-9	14-11	18-2	21-1	7-2	10-6	13-4	16-3	18-10
	Hem-fir	#3	6-2	9-0	11-5	13-11	16-2	5-6	8-1	10-3	12-6	14-6
	Southern pine	SS	8-11	14-1	18-6	23-8	Note b	8-11	14-1	18-5	1-11	25-11
	Southern pine	#1	8-7	13-0	16-6	19-3	22-10	7-10	11-7	14-9	17-3	20-5
	Southern pine	#2	7-6	11-2	14-2	16-10	19-10	6-8	10-0	12-8	15-1	17-9
	Southern pine	#3	5-9	8-6	10-8	13-0	15-4	5-2	7-7	9-7	11-7	13-9
	Spruce-pine-fir	SS	8-5	13-3	17-5	22-1	25-7	8-5	12-9	16-2	19-9	22-10
	Spruce-pine-fir	#1	8-2	11-11	15-1	18-5	21-5	7-3	10-8	13-6	16-6	19-2
	Spruce-pine-fir	#2	8-2	11-11	15-1	18-5	21-5	7-3	10-8	13-6	16-6	19-2
	Spruce-pine-fir	#3	6-2	9-0	11-5	13-11	16-2	5-6	8-1	10-3	12-6	14-6
19.2	Douglas fir-larch	SS	8-7	13-6	17-9	22-1	25-7	8-7	12-9	16-2	19-9	22-10
	Douglas fir-larch	#1	7-11	11-8	14-9	18-0	20-11	7-1	10-5	13-2	16-1	18-8
	Douglas fir-larch	#2	7-7	11-0	14-0	17-1	19-10	6-9	9-10	12-6	15-3	17-9
	Douglas fir-larch	#3	5-9	8-5	10-8	13-1	15-2	5-2	7-7	9-7	11-8	13-6
	Hem-fir	SS	8-1	12-9	16-9	21-4	24-8	8-1	12-4	15-7	19-1	22-1
	Hem-fir	#1	7-10	11-6	14-7	17-9	20-7	7-0	10-3	13-0	15-11	18-5
	Hem-fir	#2	7-4	10-9	13-7	16-7	19-3	6-7	9-7	12-2	14-10	17-3
	Hem-fir	#3	5-7	8-3	10-5	12-9	14-9	5-0	7-4	9-4	11-5	13-2

(continued)

TABLE R802.4.1(3)—continued
RAFTER SPANS FOR COMMON LUMBER SPECIES
(Ground snow load = 30 psf, ceiling not attached to rafters, L/Δ = 180)

RAFTER SPACING (inches)	SPECIES AND GRADE		DEAD LOAD = 10 psf					DEAD LOAD = 20 psf				
			2 × 4	2 × 6	2 × 8	2 × 10	2 × 12	2 × 4	2 × 6	2 × 8	2 × 10	2 × 12
			Maximum rafter spans[a]									
			(feet - inches)	(feet - inches)	(feet - inches)	(feet - inches)	(feet - inches)	(feet - inches)	(feet - inches)	(feet - inches)	(feet - inches)	(feet - inches)
19.2	Southern pine	SS	8-5	13-3	17-5	22-3	Note b	8-5	13-3	16-10	20-0	23-7
	Southern pine	#1	8-0	11-10	15-1	17-7	20-11	7-1	10-7	13-5	15-9	18-8
	Southern pine	#2	6-10	10-2	12-11	15-4	18-1	6-1	9-2	11-7	13-9	16-2
	Southern pine	#3	5-3	7-9	9-9	11-10	14-0	4-8	6-11	8-9	10-7	12-6
	Spruce-pine-fir	SS	7-11	12-5	16-5	20-2	23-4	7-11	11-8	14-9	18-0	20-11
	Spruce-pine-fir	#1	7-5	10-11	13-9	16-10	19-6	6-8	9-9	12-4	15-1	17-6
	Spruce-pine-fir	#2	7-5	10-11	13-9	16-10	19-6	6-8	9-9	12-4	15-1	17-6
	Spruce-pine-fir	#3	5-7	8-3	10-5	12-9	14-9	5-0	7-4	9-4	11-5	13-2
24	Douglas fir-larch	SS	8-0	12-6	16-2	19-9	22-10	7-10	11-5	14-5	17-8	20-5
	Douglas fir-larch	#1	7-1	10-5	13-2	16-1	18-8	6-4	9-4	11-9	14-5	16-8
	Douglas fir-larch	#2	6-9	9-10	12-6	15-3	17-9	6-0	8-10	11-2	13-8	15-10
	Douglas fir-larch	#3	5-2	7-7	9-7	11-8	13-6	4-7	6-9	8-7	10-5	12-1
	Hem-fir	SS	7-6	11-10	15-7	19-1	22-1	7-6	11-0	13-11	17-0	19-9
	Hem-fir	#1	7-0	10-3	13-0	15-11	18-5	6-3	9-2	11-8	14-3	16-6
	Hem-fir	#2	6-7	9-7	12-2	14-10	17-3	5-10	8-7	10-10	13-3	15-5
	Hem-fir	#3	5-0	7-4	9-4	11-5	13-2	4-6	6-7	8-4	10-2	11-10
	Southern pine	SS	7-10	12-3	16-2	20-0	23-7	7-10	11-10	15-0	17-11	21-2
	Southern pine	#1	7-1	10-7	13-5	15-9	18-8	6-4	9-6	12-0	14-1	16-8
	Southern pine	#2	6-1	9-2	11-7	13-9	16-2	5-5	8-2	10-4	12-3	14-6
	Southern pine	#3	4-8	6-11	8-9	10-7	12-6	4-2	6-2	7-10	9-6	11-2
	Spruce-pine-fir	SS	7-4	11-7	14-9	18-0	20-11	7-1	10-5	13-2	16-1	18-8
	Spruce-pine-fir	#1	6-8	9-9	12-4	15-1	17-6	5-11	8-8	11-0	13-6	15-7
	Spruce-pine-fir	#2	6-8	9-9	12-4	15-1	17-6	5-11	8-8	11-0	13-6	15-7
	Spruce-pine-fir	#3	5-0	7-4	9-4	11-5	13-2	4-6	6-7	8-4	10-2	11-10

Check sources for availability of lumber in lengths greater than 20 feet.

For SI: 1 inch = 25.4 mm, 1 foot = 304.8 mm, 1 pound per square foot = 0.0479 kPa.

a. The tabulated rafter spans assume that ceiling joists are located at the bottom of the attic space or that some other method of resisting the outward push of the rafters on the bearing walls, such as rafter ties, is provided at that location. Where ceiling joists or rafter ties are located higher in the attic space, the rafter spans shall be multiplied by the following factors:

H_C/H_R	Rafter Span Adjustment Factor
1/3	0.67
1/4	0.76
1/5	0.83
1/6	0.90
1/7.5 or less	1.00

where:

H_C = Height of ceiling joists or rafter ties measured vertically above the top of the rafter support walls.

H_R = Height of roof ridge measured vertically above the top of the rafter support walls.

b. Span exceeds 26 feet in length.

TABLE R802.4.1(4)
RAFTER SPANS FOR COMMON LUMBER SPECIES
(Ground snow load = 30 psf, ceiling attached to rafters, L/Δ = 240)

RAFTER SPACING (inches)	SPECIES AND GRADE		DEAD LOAD = 10 psf					DEAD LOAD = 20 psf				
			2 × 4	2 × 6	2 × 8	2 × 10	2 × 12	2 × 4	2 × 6	2 × 8	2 × 10	2 × 12
			Maximum rafter spans[a]									
			(feet - inches)	(feet - inches)	(feet - inches)	(feet - inches)	(feet - inches)	(feet - inches)	(feet - inches)	(feet - inches)	(feet - inches)	(feet - inches)
12	Douglas fir-larch	SS	9-1	14-4	18-10	24-1	Note b	9-1	14-4	18-10	24-1	Note b
	Douglas fir-larch	#1	8-9	13-9	18-2	22-9	Note b	8-9	13-2	16-8	20-4	23-7
	Douglas fir-larch	#2	8-7	13-6	17-8	21-7	25-1	8-6	12-6	15-10	19-4	22-5
	Douglas fir-larch	#3	7-3	10-8	13-6	16-6	19-2	6-6	9-6	12-1	14-9	17-1
	Hem-fir	SS	8-7	13-6	17-10	22-9	Note b	8-7	13-6	17-10	22-9	Note b
	Hem-fir	#1	8-5	13-3	17-5	22-3	26-0	8-5	13-0	16-6	20-1	23-4
	Hem-fir	#2	8-0	12-7	16-7	21-0	24-4	8-0	12-2	15-4	18-9	21-9
	Hem-fir	#3	7-1	10-5	13-2	16-1	18-8	6-4	9-4	11-9	14-5	16-8
	Southern pine	SS	8-11	14-1	18-6	23-8	Note b	8-11	14-1	18-6	23-8	Note b
	Southern pine	#1	8-7	13-6	17-10	22-3	Note b	8-7	13-5	17-0	19-11	23-7
	Southern pine	#2	8-3	12-11	16-4	19-5	22-10	7-8	11-7	14-8	17-4	20-5
	Southern pine	#3	6-7	9-9	12-4	15-0	17-9	5-11	8-9	11-0	13-5	15-10
	Spruce-pine-fir	SS	8-5	13-3	17-5	22-3	Note b	8-5	13-3	17-5	22-3	Note b
	Spruce-pine-fir	#1	8-3	12-11	17-0	21-4	24-8	8-3	12-4	15-7	19-1	22-1
	Spruce-pine-fir	#2	8-3	12-11	17-0	21-4	24-8	8-3	12-4	15-7	19-1	22-1
	Spruce-pine-fir	#3	7-1	10-5	13-2	16-1	18-8	6-4	9-4	11-9	14-5	16-8
16	Douglas fir-larch	SS	8-3	13-0	17-2	21-10	Note b	8-3	13-0	17-2	21-7	25-1
	Douglas fir-larch	#1	8-0	12-6	16-2	19-9	22-10	7-10	11-5	14-5	17-8	20-5
	Douglas fir-larch	#2	7-10	12-1	15-4	18-9	21-8	7-5	10-10	13-8	16-9	19-5
	Douglas fir-larch	#3	6-4	9-3	11-8	14-3	16-7	5-8	8-3	10-6	12-9	14-10
	Hem-fir	SS	7-10	12-3	16-2	20-8	25-1	7-10	12-3	16-2	20-8	24-2
	Hem-fir	#1	7-8	12-0	15-10	19-6	22-7	7-8	11-3	14-3	17-5	20-2
	Hem-fir	#2	7-3	11-5	14-11	18-2	21-1	7-2	10-6	13-4	16-3	18-10
	Hem-fir	#3	6-2	9-0	11-5	13-11	16-2	5-6	8-1	10-3	12-6	14-6
	Southern pine	SS	8-1	12-9	16-10	21-6	Note b	8-1	12-9	16-10	21-6	25-11
	Southern pine	#1	7-10	12-3	16-2	19-3	22-10	7-10	11-7	14-9	17-3	20-5
	Southern pine	#2	7-6	11-2	14-2	16-10	19-10	6-8	10-0	12-8	15-1	17-9
	Southern pine	#3	5-9	8-6	10-8	13-0	15-4	5-2	7-7	9-7	11-7	13-9
	Spruce-pine-fir	SS	7-8	12-0	15-10	20-2	24-7	7-8	12-0	15-10	19-9	22-10
	Spruce-pine-fir	#1	7-6	11-9	15-1	18-5	21-5	7-3	10-8	13-6	16-6	19-2
	Spruce-pine-fir	#2	7-6	11-9	15-1	18-5	21-5	7-3	10-8	13-6	16-6	19-2
	Spruce-pine-fir	#3	6-2	9-0	11-5	13-11	16-2	5-6	8-1	10-3	12-6	14-6
19.2	Douglas fir-larch	SS	7-9	12-3	16-1	20-7	25-0	7-9	12-3	16-1	19-9	22-10
	Douglas fir-larch	#1	7-6	11-8	14-9	18-0	20-11	7-1	10-5	13-2	16-1	18-8
	Douglas fir-larch	#2	7-4	11-0	14-0	17-1	19-10	6-9	9-1	12-6	15-3	17-9
	Douglas fir-larch	#3	5-9	8-5	10-8	13-1	15-2	5-2	7-7	9-7	11-8	13-6
	Hem-fir	SS	7-4	11-7	15-3	19-5	23-7	7-4	11-7	15-3	19-1	22-1
	Hem-fir	#1	7-2	11-4	14-7	17-9	20-7	7-0	16-3	13-0	15-11	18-5
	Hem-fir	#2	6-10	10-9	13-7	16-7	19-3	6-7	9-7	12-2	14-10	17-3
	Hem-fir	#3	5-7	8-3	10-5	12-9	14-9	5-0	7-4	9-4	11-5	13-2

(continued)

TABLE R802.4.1(4)—continued
RAFTER SPANS FOR COMMON LUMBER SPECIES
(Ground snow load = 30 psf, ceiling attached to rafters, L/Δ = 240)

RAFTER SPACING (inches)	SPECIES AND GRADE		DEAD LOAD = 10 psf					DEAD LOAD = 20 psf				
			2 × 4	2 × 6	2 × 8	2 × 10	2 × 12	2 × 4	2 × 6	2 × 8	2 × 10	2 × 12
			Maximum rafter spans[a]									
			(feet - inches)	(feet - inches)	(feet - inches)	(feet - inches)	(feet - inches)	(feet - inches)	(feet - inches)	(feet - inches)	(feet - inches)	(feet - inches)
19.2	Southern pine	SS	7-8	12-0	15-10	20-2	24-7	7-8	12-0	15-10	20-0	23-7
	Southern pine	#1	7-4	11-7	15-1	17-7	20-11	7-1	10-7	13-5	15-9	18-8
	Southern pine	#2	6-10	10-2	12-11	15-4	18-1	6-1	9-2	11-7	13-9	16-2
	Southern pine	#3	5-3	7-9	9-9	11-10	14-0	4-8	6-11	8-9	10-7	12-6
	Spruce-pine-fir	SS	7-2	11-4	14-11	19-0	23-1	7-2	11-4	14-9	18-0	20-11
	Spruce-pine-fir	#1	7-0	10-11	13-9	16-10	19-6	6-8	9-9	12-4	15-1	17-6
	Spruce-pine-fir	#2	7-0	10-11	13-9	16-10	19-6	6-8	9-9	12-4	15-1	17-6
	Spruce-pine-fir	#3	5-7	8-3	10-5	12-9	14-9	5-0	7-4	9-4	11-5	13-2
24	Douglas fir-larch	SS	7-3	11-4	15-0	19-1	22-10	7-3	11-4	14-5	17-8	20-5
	Douglas fir-larch	#1	7-0	10-5	13-2	16-1	18-8	6-4	9-4	11-9	14-5	16-8
	Douglas fir-larch	#2	6-9	9-10	12-6	15-3	17-9	6-0	8-10	11-2	13-8	15-10
	Douglas fir-larch	#3	5-2	7-7	9-7	11-8	13-6	4-7	6-9	8-7	10-5	12-1
	Hem-fir	SS	6-10	10-9	14-2	18-0	21-11	6-10	10-9	13-11	17-0	19-9
	Hem-fir	#1	6-8	10-3	13-0	15-11	18-5	6-3	9-2	11-8	14-3	16-6
	Hem-fir	#2	6-4	9-7	12-2	14-10	17-3	5-10	8-7	10-10	13-3	15-5
	Hem-fir	#3	5-0	7-4	9-4	11-5	13-2	4-6	6-7	8-4	10-2	11-10
	Southern pine	SS	7-1	11-2	14-8	18-9	22-10	7-1	11-2	14-8	17-11	21-2
	Southern pine	#1	6-10	10-7	13-5	15-9	18-8	6-4	9-6	12-0	14-1	16-8
	Southern pine	#2	6-1	9-2	11-7	13-9	16-2	5-5	8-2	10-4	12-3	14-6
	Southern pine	#3	4-8	6-11	8-9	10-7	12-6	4-2	6-2	7-10	9-6	11-2
	Spruce-pine-fir	SS	6-8	10-6	13-10	17-8	20-11	6-8	10-5	13-2	16-1	18-8
	Spruce-pine-fir	#1	6-6	9-9	12-4	15-1	17-6	5-11	8-8	11-0	13-6	15-7
	Spruce-pine-fir	#2	6-6	9-9	12-4	15-1	17-6	5-11	8-8	11-0	13-6	15-7
	Spruce-pine-fir	#3	5-0	7-4	9-4	11-5	13-2	4-6	6-7	8-4	10-2	11-10

Check sources for availability of lumber in lengths greater than 20 feet.

For SI: 1 inch = 25.4 mm, 1 foot = 304.8 mm, 1 pound per square foot = 0.0479 kPa.

a. The tabulated rafter spans assume that ceiling joists are located at the bottom of the attic space or that some other method of resisting the outward push of the rafters on the bearing walls, such as rafter ties, is provided at that location. Where ceiling joists or rafter ties are located higher in the attic space, the rafter spans shall be multiplied by the following factors:

H_C/H_R	Rafter Span Adjustment Factor
1/3	0.67
1/4	0.76
1/5	0.83
1/6	0.90
1/7.5 or less	1.00

where:

H_C = Height of ceiling joists or rafter ties measured vertically above the top of the rafter support walls.

H_R = Height of roof ridge measured vertically above the top of the rafter support walls.

b. Span exceeds 26 feet in length.

TABLE R802.4.1(5)
RAFTER SPANS FOR COMMON LUMBER SPECIES
(Ground snow load = 50 psf, ceiling not attached to rafters, L/Δ = 180)

RAFTER SPACING (inches)	SPECIES AND GRADE		DEAD LOAD = 10 psf					DEAD LOAD = 20 psf				
			2 × 4	2 × 6	2 × 8	2 × 10	2 × 12	2 × 4	2 × 6	2 × 8	2 × 10	2 × 12
			Maximum rafter spans[a]									
			(feet - inches)	(feet - inches)	(feet - inches)	(feet - inches)	(feet - inches)	(feet - inches)	(feet - inches)	(feet - inches)	(feet - inches)	(feet - inches)
12	Douglas fir-larch	SS	8-5	13-3	17-6	22-4	26-0	8-5	13-3	17-3	21-1	24-5
	Douglas fir-larch	#1	8-2	12-0	15-3	18-7	21-7	7-7	11-2	14-1	17-3	20-0
	Douglas fir-larch	#2	7-10	11-5	14-5	17-8	20-5	7-3	10-7	13-4	16-4	18-11
	Douglas fir-larch	#3	6-0	8-9	11-0	13-6	15-7	5-6	8-1	10-3	12-6	14-6
	Hem-fir	SS	8-0	12-6	16-6	21-1	25-6	8-0	12-6	16-6	20-4	23-7
	Hem-fir	#1	7-10	11-10	15-0	18-4	21-3	7-6	11-0	13-11	17-0	19-9
	Hem-fir	#2	7-5	11-1	14-0	17-2	19-11	7-0	10-3	13-0	15-10	18-5
	Hem-fir	#3	5-10	8-6	10-9	13-2	15-3	5-5	7-10	10-0	12-2	14-1
	Southern pine	SS	8-4	13-1	17-2	21-11	Note b	8-4	13-1	17-2	21-5	25-3
	Southern pine	#1	8-0	12-3	15-6	18-2	21-7	7-7	11-4	14-5	16-10	20-0
	Southern pine	#2	7-0	10-6	13-4	15-10	18-8	6-6	9-9	12-4	14-8	17-3
	Southern pine	#3	5-5	8-0	10-1	12-3	14-6	5-0	7-5	9-4	11-4	13-5
	Spruce-pine-fir	SS	7-10	12-3	16-2	20-8	24-1	7-10	12-3	15-9	19-3	22-4
	Spruce-pine-fir	#1	7-8	11-3	14-3	17-5	20-2	7-1	10-5	13-2	16-1	18-8
	Spruce-pine-fir	#2	7-8	11-3	14-3	17-5	20-2	7-1	10-5	13-2	16-1	18-8
	Spruce-pine-fir	#3	5-10	8-6	10-9	13-2	15-3	5-5	7-10	10-0	12-2	14-1
16	Douglas fir-larch	SS	7-8	12-1	15-11	19-9	22-10	7-8	11-10	14-11	18-3	21-2
	Douglas fir-larch	#1	7-1	10-5	13-2	16-1	18-8	6-7	9-8	12-2	14-11	17-3
	Douglas fir-larch	#2	6-9	9-10	12-6	15-3	17-9	6-3	9-2	11-7	14-2	16-5
	Douglas fir-larch	#3	5-2	7-7	9-7	11-18	13-6	4-9	7-0	8-10	10-10	12-6
	Hem-fir	SS	7-3	11-5	15-0	19-1	22-1	7-3	11-5	14-5	17-8	20-5
	Hem-fir	#1	7-0	10-3	13-0	15-11	18-5	6-6	9-6	12-1	14-9	17-1
	Hem-fir	#2	6-7	9-7	12-2	14-10	17-3	6-1	8-11	11-3	13-9	15-11
	Hem-fir	#3	5-0	7-4	9-4	11-5	13-2	4-8	6-10	8-8	10-6	12-3
	Southern pine	SS	7-6	11-10	15-7	19-11	23-7	7-6	11-10	15-7	18-6	21-10
	Southern pine	#1	7-1	10-7	13-5	15-9	18-8	6-7	9-10	12-5	14-7	17-3
	Southern pine	#2	6-1	9-2	11-7	13-9	16-2	5-8	8-5	10-9	12-9	15-0
	Southern pine	#3	4-8	6-11	8-9	10-7	12-6	4-4	6-5	8-1	9-10	11-7
	Spruce-pine-fir	SS	[illegible]	[illegible]	[illegible]	[illegible]	[illegible]	[illegible]	[illegible]	[illegible]	[illegible]	[illegible]
	Spruce-pine-fir	#1	6-8	9-9	12-4	15-1	17-6	6-2	9-0	11-5	13-11	16-2
	Spruce-pine-fir	#2	6-8	9-9	12-4	15-1	17-6	6-2	9-0	11-5	13-11	16-2
	Spruce-pine-fir	#3	5-0	7-4	9-4	11-5	13-2	4-8	6-10	8-8	10-6	12-3
19.2	Douglas fir-larch	SS	7-3	11-4	14-9	18-0	20-11	7-3	10-9	13-8	16-8	19-4
	Douglas fir-larch	#1	6-6	9-6	12-0	14-8	17-1	6-0	8-10	11-2	13-7	15-9
	Douglas fir-larch	#2	6-2	9-0	11-5	13-11	16-2	5-8	8-4	10-9	12-11	15-0
	Douglas fir-larch	#3	4-8	6-11	8-9	10-8	12-4	4-4	6-4	8-1	9-10	11-5
	Hem-fir	SS	6-10	10-9	14-2	17-5	20-2	6-10	10-5	13-2	16-1	18-8
	Hem-fir	#1	6-5	9-5	11-11	14-6	16-10	8-11	8-8	11-0	13-5	15-7
	Hem-fir	#2	6-0	8-9	11-1	13-7	15-9	5-7	8-1	10-3	12-7	14-7
	Hem-fir	#3	4-7	6-9	8-6	10-5	12-1	4-3	6-3	7-11	9-7	11-2

(continued)

TABLE R802.4.1(5)—continued
RAFTER SPANS FOR COMMON LUMBER SPECIES
(Ground snow load = 50 psf, ceiling not attached to rafters, L/Δ = 180)

RAFTER SPACING (inches)	SPECIES AND GRADE		DEAD LOAD = 10 psf					DEAD LOAD = 20 psf				
			2 × 4	2 × 6	2 × 8	2 × 10	2 × 12	2 × 4	2 × 6	2 × 8	2 × 10	2 × 12
			Maximum rafter spans[a]									
			(feet - inches)	(feet - inches)	(feet - inches)	(feet - inches)	(feet - inches)	(feet - inches)	(feet - inches)	(feet - inches)	(feet - inches)	(feet - inches)
19.2	Southern pine	SS	7-1	11-2	14-8	18-3	21-7	7-1	11-2	14-2	16-11	20-0
	Southern pine	#1	6-6	9-8	12-3	14-4	17-1	6-0	9-0	11-4	13-4	15-9
	Southern pine	#2	5-7	8-4	10-7	12-6	14-9	5-2	7-9	9-9	11-7	13-8
	Southern pine	#3	4-3	6-4	8-0	9-8	11-5	4-0	5-10	7-4	8-11	10-7
	Spruce-pine-fir	SS	6-8	10-6	13-5	16-5	19-1	6-8	9-10	12-5	15-3	17-8
	Spruce-pine-fir	#1	6-1	8-11	11-3	13-9	15-11	5-7	8-3	10-5	12-9	14-9
	Spruce-pine-fir	#2	6-1	8-11	11-3	13-9	15-11	5-7	8-3	10-5	12-9	14-9
	Spruce-pine-fir	#3	4-7	6-9	8-6	10-5	12-1	4-3	6-3	7-11	9-7	11-2
24	Douglas fir-larch	SS	6-8	10-5	13-2	16-1	18-8	6-7	9-8	12-2	14-11	17-3
	Douglas fir-larch	#1	5-10	8-6	10-9	13-2	15-3	5-5	7-10	10-0	12-2	14-1
	Douglas fir-larch	#2	5-6	8-1	10-3	12-6	14-6	5-1	7-6	9-5	11-7	13-5
	Douglas fir-larch	#3	4-3	6-2	7-10	9-6	11-1	3-11	5-8	7-3	8-10	10-3
	Hem-fir	SS	6-4	9-11	12-9	15-7	18-0	6-4	9-4	11-9	14-5	16-8
	Hem-fir	#1	5-9	8-5	10-8	13-0	15-1	8-4	7-9	9-10	12-0	13-11
	Hem-fir	#2	5-4	7-10	9-11	12-1	14-1	4-11	7-3	9-2	11-3	13-0
	Hem-fir	#3	4-1	6-0	7-7	9-4	10-9	3-10	5-7	7-1	8-7	10-0
	Southern pine	SS	6-7	10-4	13-8	16-4	19-3	6-7	10-0	12-8	15-2	17-10
	Southern pine	#1	5-10	8-8	11-0	12-10	15-3	5-5	8-0	10-2	11-11	14-1
	Southern pine	#2	5-0	7-5	9-5	11-3	13-2	4-7	6-11	8-9	10-5	12-3
	Southern pine	#3	3-10	5-8	7-1	8-8	10-3	3-6	5-3	6-7	8-0	9-6
	Spruce-pine-fir	SS	6-2	9-6	12-0	14-8	17-1	6-0	8-10	11-2	13-7	15-9
	Spruce-pine-fir	#1	5-5	7-11	10-1	12-4	14-3	5-0	7-4	9-4	11-5	13-2
	Spruce-pine-fir	#2	5-5	7-11	10-1	12-4	14-3	5-0	7-4	9-4	11-5	13-2
	Spruce-pine-fir	#3	4-1	6-0	7-7	9-4	10-9	3-10	5-7	7-1	8-7	10-0

Check sources for availability of lumber in lengths greater than 20 feet.

For SI: 1 inch = 25.4 mm, 1 foot = 304.8 mm, 1 pound per square foot = 0.0479 kPa

a. The tabulated rafter spans assume that ceiling joists are located at the bottom of the attic space or that some other method of resisting the outward push of the rafters on the bearing walls, such as rafter ties, is provided at that location. Where ceiling joists or rafter ties are located higher in the attic space, the rafter spans shall be multiplied by the following factors:

H_C/H_R	Rafter Span Adjustment Factor
1/3	0.67
1/4	0.76
1/5	0.83
1/6	0.90
1/7.5 or less	1.00

where:

H_C = Height of ceiling joists or rafter ties measured vertically above the top of the rafter support walls.

H_R = Height of roof ridge measured vertically above the top of the rafter support walls.

b. Span exceeds 26 feet in length.

TABLE R802.4.1(6)
RAFTER SPANS FOR COMMON LUMBER SPECIES
(Ground snow load = 50 psf, ceiling attached to rafters, L/Δ = 240)

RAFTER SPACING (inches)	SPECIES AND GRADE		DEAD LOAD = 10 psf					DEAD LOAD = 20 psf				
			2 × 4	2 × 6	2 × 8	2 × 10	2 × 12	2 × 4	2 × 6	2 × 8	2 × 10	2 × 12
			Maximum rafter spans[a]									
			(feet-inches)	(feet-inches)	(feet-inches)	(feet-inches)	(feet-inches)	(feet-inches)	(feet-inches)	(feet-inches)	(feet-inches)	(feet-inches)
12	Douglas fir-larch	SS	7-8	12-1	15-11	20-3	24-8	7-8	12-1	15-11	20-3	24-5
	Douglas fir-larch	#1	7-5	11-7	15-3	18-7	21-7	7-5	11-2	14-1	17-3	20-0
	Douglas fir-larch	#2	7-3	11-5	14-5	17-8	20-5	7-3	10-7	13-4	16-4	18-11
	Douglas fir-larch	#3	6-0	8-9	11-0	13-6	15-7	5-6	8-1	10-3	12-6	14-6
	Hem-fir	SS	7-3	11-5	15-0	19-2	23-4	7-3	11-5	15-0	19-2	23-4
	Hem-fir	#1	7-1	11-2	14-8	18-4	21-3	7-1	11-0	13-11	17-0	19-9
	Hem-fir	#2	6-9	10-8	14-0	17-2	19-11	6-9	10-3	13-0	15-10	18-5
	Hem-fir	#3	5-10	8-6	10-9	13-2	15-3	5-5	7-10	10-0	12-2	14-1
	Southern pine	SS	7-6	11-10	15-7	19-11	24-3	7-6	11-10	15-7	19-11	24-3
	Southern pine	#1	7-3	11-5	15-0	18-2	21-7	7-3	11-4	14-5	16-10	20-0
	Southern pine	#2	6-11	10-6	13-4	15-10	18-8	6-6	9-9	12-4	14-8	17-3
	Southern pine	#3	5-5	8-0	10-1	12-3	14-6	5-0	7-5	9-4	11-4	13-5
	Spruce-pine-fir	SS	7-1	11-2	14-8	18-9	22-10	7-1	11-2	14-8	18-9	22-4
	Spruce-pine-fir	#1	6-11	10-11	14-3	17-5	20-2	6-11	10-5	13-2	16-1	18-8
	Spruce-pine-fir	#2	6-11	10-11	14-3	17-5	20-2	6-11	10-5	13-2	16-1	18-8
	Spruce-pine-fir	#3	5-10	8-6	10-9	13-2	15-3	5-5	7-10	10-0	12-2	14-1
16	Douglas fir-larch	SS	7-0	11-0	14-5	18-5	22-5	7-0	11-0	14-5	18-3	21-2
	Douglas fir-larch	#1	6-9	10-5	13-2	16-1	18-8	6-7	9-8	12-2	14-11	17-3
	Douglas fir-larch	#2	6-7	9-10	12-6	15-3	17-9	6-3	9-2	11-7	14-2	16-5
	Douglas fir-larch	#3	5-2	7-7	9-7	11-8	13-6	4-9	7-0	8-10	10-10	12-6
	Hem-fir	SS	6-7	10-4	13-8	17-5	21-2	6-7	10-4	13-8	17-5	20-5
	Hem-fir	#1	6-5	10-2	13-0	15-11	18-5	6-5	9-6	12-1	14-9	17-1
	Hem-fir	#2	6-2	9-7	12-2	14-10	17-3	6-1	8-11	11-3	13-9	15-11
	Hem-fir	#3	5-0	7-4	9-4	11-5	13-2	4-8	6-10	8-8	10-6	12-3
	Southern pine	SS	6-10	10-9	14-2	18-1	22-0	6-10	10-9	14-2	18-1	21-10
	Southern pine	#1	6-7	10-4	13-5	15-9	18-8	6-7	9-10	12-5	14-7	17-3
	Southern pine	#2	6-1	9-2	11-7	13-9	16-2	5-8	8-5	10-9	12-9	15-0
	Southern pine	#3	4-8	6-11	8-9	10-7	12-6	4-4	6-5	8-1	9-10	11-7
	Spruce-pine-fir	SS	[illegible]	[illegible]	[illegible]	[illegible]	[illegible]	[illegible]	[illegible]	[illegible]	[illegible]	[illegible]
	Spruce-pine-fir	#1	6-4	9-9	12-4	15-1	17-6	6-2	9-0	11-5	13-11	16-2
	Spruce-pine-fir	#2	6-4	9-9	12-4	15-1	17-6	6-2	9-0	11-5	13-11	16-2
	Spruce-pine-fir	#3	5-0	7-4	9-4	11-5	13-2	4-8	6-10	8-8	10-6	12-3
19.2	Douglas fir-larch	SS	6-7	10-4	13-7	17-4	20-11	6-7	10-4	13-7	16-8	19-4
	Douglas fir-larch	#1	6-4	9-6	12-0	14-8	17-1	6-0	8-10	11-2	13-7	15-9
	Douglas fir-larch	#2	6-2	9-0	11-5	13-11	16-2	5-8	8-4	10-7	12-11	15-0
	Douglas fir-larch	#3	4-8	6-11	8-9	10-8	12-4	4-4	6-4	8-1	9-10	11-5
	Hem-fir	SS	6-2	9-9	12-10	16-5	19-11	6-2	9-9	12-10	16-1	18-8
	Hem-fir	#1	6-1	9-5	11-11	14-6	16-10	5-11	8-8	11-0	13-5	15-7
	Hem-fir	#2	5-9	8-9	11-1	13-7	15-9	5-7	8-1	10-3	12-7	14-7
	Hem-fir	#3	4-7	6-9	8-6	10-5	12-1	4-3	6-3	7-11	9-7	11-2

(continued)

TABLE R802.4.1(6)—continued
RAFTER SPANS FOR COMMON LUMBER SPECIES
(Ground snow load = 50 psf, ceiling attached to rafters, L/Δ = 240)

RAFTER SPACING (inches)	SPECIES AND GRADE		DEAD LOAD = 10 psf					DEAD LOAD = 20 psf				
			2 × 4	2 × 6	2 × 8	2 × 10	2 × 12	2 × 4	2 × 6	2 × 8	2 × 10	2 × 12
			Maximum rafter spans[a]									
			(feet-inches)	(feet-inches)	(feet-inches)	(feet-inches)	(feet-inches)	(feet-inches)	(feet-inches)	(feet-inches)	(feet-inches)	(feet-inches)
19.2	Southern pine	SS	6-5	10-2	13-4	17-0	20-9	6-5	10-2	13-4	16-11	20-0
	Southern pine	#1	6-2	9-8	12-3	14-4	17-1	6-0	9-0	11-4	13-4	15-9
	Southern pine	#2	5-7	8-4	10-7	12-6	14-9	5-2	7-9	9-9	11-7	13-8
	Southern pine	#3	4-3	6-4	8-0	9-8	11-5	4-0	5-10	7-4	8-11	10-7
	Spruce-pine-fir	SS	6-1	9-6	12-7	16-0	19-1	6-1	9-6	12-5	15-3	17-8
	Spruce-pine-fir	#1	5-11	8-11	11-3	13-9	15-11	5-7	8-3	10-5	12-9	14-9
	Spruce-pine-fir	#2	5-11	8-11	11-3	13-9	15-11	5-7	8-3	10-5	12-9	14-9
	Spruce-pine-fir	#3	4-7	6-9	8-6	10-5	12-1	4-3	6-3	7-11	9-7	11-2
24	Douglas fir-larch	SS	6-1	9-7	12-7	16-1	18-8	6-1	9-7	12-2	14-11	17-3
	Douglas fir-larch	#1	5-10	8-6	10-9	13-2	15-3	5-5	7-10	10-0	12-2	14-1
	Douglas fir-larch	#2	5-6	8-1	10-3	12-6	14-6	5-1	7-6	9-5	11-7	13-5
	Douglas fir-larch	#3	4-3	6-2	7-10	9-6	11-1	3-11	5-8	7-3	8-10	10-3
	Hem-fir	SS	5-9	9-1	11-11	15-2	18-0	5-9	9-1	11-9	14-5	15-11
	Hem-fir	#1	5-8	8-5	10-8	13-0	15-1	5-4	7-9	9-10	12-0	13-11
	Hem-fir	#2	5-4	7-10	9-11	12-1	14-1	4-11	7-3	9-2	11-3	13-0
	Hem-fir	#3	4-1	6-0	7-7	9-4	10-9	3-10	5-7	7-1	8-7	10-0
	Southern pine	SS	6-0	9-5	12-5	15-10	19-3	6-0	9-5	12-5	15-2	17-10
	Southern pine	#1	5-9	8-8	11-0	12-10	15-3	5-5	8-0	10-2	11-11	14-1
	Southern pine	#2	5-0	7-5	9-5	11-3	13-2	4-7	6-11	8-9	10-5	12-3
	Southern pine	#3	3-10	5-8	7-1	8-8	10-3	3-6	5-3	6-7	8-0	9-6
	Spruce-pine-fir	SS	5-8	8-10	11-8	14-8	17-1	5-8	8-10	11-2	13-7	15-9
	Spruce-pine-fir	#1	5-5	7-11	10-1	12-4	14-3	5-0	7-4	9-4	11-5	13-2
	Spruce-pine-fir	#2	5-5	7-11	10-1	12-4	14-3	5-0	7-4	9-4	11-5	13-2
	Spruce-pine-fir	#3	4-1	6-0	7-7	9-4	10-9	3-10	5-7	7-1	8-7	10-0

Check sources for availability of lumber in lengths greater than 20 feet.

For SI: 1 inch = 25.4 mm, 1 foot = 304.8 mm, 1 pound per square foot = 0.0479 kPa.

a. The tabulated rafter spans assume that ceiling joists are located at the bottom of the attic space or that some other method of resisting the outward push of the rafters on the bearing walls, such as rafter ties, is provided at that location. Where ceiling joists or rafter ties are located higher in the attic space, the rafter spans shall be multiplied by the following factors:

H_C/H_R	Rafter Span Adjustment Factor
1/3	0.67
1/4	0.76
1/5	0.83
1/6	0.90
1/7.5 or less	1.00

where:

H_C = Height of ceiling joists or rafter ties measured vertically above the top of the rafter support walls.

H_R = Height of roof ridge measured vertically above the top of the rafter support walls.

TABLE R802.4.1(7)
RAFTER SPANS FOR COMMON LUMBER SPECIES
(Ground snow load = 70 psf, ceiling not attached to rafters, L/Δ = 180)

RAFTER SPACING (Inches)	SPECIES AND GRADE		DEAD LOAD = 10 psf					DEAD LOAD = 20 psf				
			2 × 4	2 × 6	2 × 8	2 × 10	2 × 12	2 × 4	2 × 6	2 × 8	2 × 10	2 × 12
			Maximum Rafter Spans[a]									
			(feet-inches)	(feet-inches)	(feet-inches)	(feet-inches)	(feet-inches)	(feet-inches)	(feet-inches)	(feet-inches)	(feet-inches)	(feet-inches)
12	Douglas fir-larch	SS	7-7	11-10	15-8	19-9	22-10	7-7	11-10	15-3	18-7	21-7
	Douglas fir-larch	#1	7-1	10-5	13-2	16-1	18-8	6-8	9-10	12-5	15-2	17-7
	Douglas fir-larch	#2	6-9	9-10	12-6	15-3	17-9	6-4	9-4	11-9	14-5	16-8
	Douglas fir-larch	#3	5-2	7-7	9-7	11-8	13-6	4-10	7-1	9-0	11-0	12-9
	Hem-fir	SS	7-2	11-3	14-9	18-10	22-1	7-2	11-3	14-8	18-0	20-10
	Hem-fir	#1	7-0	10-3	13-0	15-11	18-5	6-7	9-8	12-3	15-0	17-5
	Hem-fir	#2	6-7	9-7	12-2	14-10	17-3	6-2	9-1	11-5	14-0	16-3
	Hem-fir	#3	5-0	7-4	9-4	11-5	13-2	4-9	6-11	8-9	10-9	12-5
	Southern pine	SS	7-5	11-8	15-4	19-7	23-7	7-5	11-8	15-4	18-10	22-3
	Southern pine	#1	7-1	10-7	13-5	15-9	18-8	6-9	10-0	12-8	14-10	17-7
	Southern pine	#2	6-1	9-2	11-7	13-9	16-2	5-9	8-7	10-11	12-11	15-3
	Southern pine	#3	4-8	6-11	8-9	10-7	12-6	4-5	6-6	8-3	10-0	11-10
	Spruce-pine-fir	SS	7-0	11-0	14-6	18-0	20-11	7-0	11-0	13-11	17-0	19-8
	Spruce-pine-fir	#1	6-8	9-9	12-4	15-1	17-6	6-3	9-2	11-8	14-2	16-6
	Spruce-pine-fir	#2	6-8	9-9	12-4	15-1	17-6	6-3	9-2	11-8	14-2	16-6
	Spruce-pine-fir	#3	5-0	7-4	9-4	11-5	13-2	4-9	6-11	8-9	10-9	12-5
16	Douglas fir-larch	SS	6-10	10-9	14-0	17-1	19-10	6-10	10-5	13-2	16-1	18-8
	Douglas fir-larch	#1	6-2	9-0	11-5	13-11	16-2	5-10	8-6	10-9	13-2	15-3
	Douglas fir-larch	#2	5-10	8-7	10-10	13-3	15-4	5-6	8-1	10-3	12-6	14-6
	Douglas fir-larch	#3	4-6	6-6	8-3	10-1	11-9	4-3	6-2	7-10	9-6	11-1
	Hem-fir	SS	6-6	10-2	13-5	16-6	19-2	6-6	10-1	12-9	15-7	18-0
	Hem-fir	#1	6-1	8-11	11-3	13-9	16-0	5-9	8-5	10-8	13-0	15-1
	Hem-fir	#2	5-8	8-4	10-6	12-10	14-11	5-4	7-10	9-11	12-1	14-1
	Hem-fir	#3	4-4	6-4	8-1	9-10	11-5	4-1	6-0	7-7	9-4	10-9
	Southern pine	SS	6-9	10-7	14-0	17-4	20-5	6-9	10-7	13-9	16-4	19-3
	Southern pine	#1	6-2	9-2	11-8	13-8	16-2	5-10	8-8	11-0	12-10	15-3
	Southern pine	#2	5-3	7-11	10-0	11-11	14-0	5-0	7-5	9-5	11-3	13-2
	Southern pine	#3	4-1	6-0	7-7	9-2	10-10	3-10	5-8	7-1	8-8	10-3
	Spruce-pine-fir	SS	[illegible]	[illegible]	12-[illegible]	[illegible]	[illegible]	[illegible]	[illegible]	[illegible]	[illegible]	[illegible]
	Spruce-pine-fir	#1	5-9	8-5	10-8	13-1	15-2	5-5	7-11	10-1	12-4	14-3
	Spruce-pine-fir	#2	5-9	8-5	10-8	13-1	15-2	5-5	7-11	10-1	12-4	14-3
	Spruce-pine-fir	#3	4-4	6-4	8-1	9-10	11-5	4-1	6-0	7-7	9-4	10-9
19.2	Douglas fir-larch	SS	6-6	10-1	12-9	15-7	18-1	6-6	9-6	12-0	14-8	17-1
	Douglas fir-larch	#1	5-7	8-3	10-5	12-9	14-9	5-4	7-9	9-10	12-0	13-11
	Douglas fir-larch	#2	5-4	7-10	9-11	12-1	14-0	5-0	7-4	9-4	11-5	13-2
	Douglas fir-larch	#3	4-1	6-0	7-7	9-3	10-8	3-10	5-7	7-1	8-8	10-1
	Hem-fir	SS	6-1	9-7	12-4	15-1	17-4	6-1	9-2	11-8	14-2	15-5
	Hem-fir	#1	5-7	8-2	10-3	12-7	14-7	5-3	7-8	9-8	11-10	13-9
	Hem-fir	#2	5-2	7-7	9-7	11-9	13-7	4-11	7-2	9-1	11-1	12-10
	Hem-fir	#3	4-0	5-10	7-4	9-0	10-5	3-9	5-6	6-11	8-6	9-10

(continued)

TABLE R802.4.1(7)—continued
RAFTER SPANS FOR COMMON LUMBER SPECIES
(Ground snow load = 70 psf, ceiling not attached to rafters, L/Δ = 180)

RAFTER SPACING (Inches)	SPECIES AND GRADE		DEAD LOAD = 10 psf					DEAD LOAD = 20 psf				
			2 × 4	2 × 6	2 × 8	2 × 10	2 × 12	2 × 4	2 × 6	2 × 8	2 × 10	2 × 12
			Maximum Rafter Spans[a]									
			(feet-inches)	(feet-inches)	(feet-inches)	(feet-inches)	(feet-inches)	(feet-inches)	(feet-inches)	(feet-inches)	(feet-inches)	(feet-inches)
19.2	Southern pine	SS	6-4	10-0	13-2	15-10	18-8	6-4	9-10	12-6	14-11	17-7
	Southern pine	#1	5-8	8-5	10-8	12-5	14-9	5-4	7-11	10-0	11-9	13-11
	Southern pine	#2	4-10	7-3	9-2	10-10	12-9	4-6	6-10	8-8	10-3	12-1
	Southern pine	#3	3-8	5-6	6-11	8-4	9-11	3-6	5-2	6-6	7-11	9-4
	Spruce-pine-fir	SS	6-0	9-2	11-8	14-3	16-6	5-11	8-8	11-0	13-5	15-7
	Spruce-pine-fir	#1	5-3	7-8	9-9	11-11	13-10	5-0	7-3	9-2	11-3	13-0
	Spruce-pine-fir	#2	5-3	7-8	9-9	11-11	13-10	5-0	7-3	9-2	11-3	13-0
	Spruce-pine-fir	#3	4-0	5-10	7-4	9-0	10-5	3-9	5-6	6-11	8-6	9-10
24	Douglas fir-larch	SS	6-0	9-0	11-5	13-11	16-2	5-10	8-6	10-9	13-2	15-3
	Douglas fir-larch	#1	5-0	7-4	9-4	11-5	13-2	4-9	6-11	8-9	10-9	12-5
	Douglas fir-larch	#2	4-9	7-0	8-10	10-10	12-6	4-6	6-7	8-4	10-2	11-10
	Douglas fir-larch	#3	3-8	5-4	6-9	8-3	9-7	3-5	5-0	6-4	7-9	9-10
	Hem-fir	SS	5-8	8-8	11-0	13-6	13-11	5-7	8-3	10-5	12-4	12-4
	Hem-fir	#1	5-0	7-3	9-2	11-3	13-0	4-8	6-10	8-8	10-7	12-4
	Hem-fir	#2	4-8	6-9	8-7	10-6	12-2	4-4	6-5	8-1	9-11	11-6
	Hem-fir	#3	3-7	5-2	6-7	8-1	9-4	3-4	4-11	6-3	7-7	8-10
	Southern pine	SS	5-11	9-3	11-11	14-2	16-8	5-11	8-10	11-2	13-4	15-9
	Southern pine	#1	5-0	7-6	9-6	11-1	13-2	4-9	7-1	9-0	10-6	12-5
	Southern pine	#2	4-4	6-5	8-2	9-9	11-5	4-1	6-1	7-9	9-2	10-9
	Southern pine	#3	3-4	4-11	6-2	7-6	8-10	3-1	4-7	5-10	7-1	8-4
	Spruce-pine-fir	SS	5-6	8-3	10-5	12-9	14-9	5-4	7-9	9-10	12-0	12-11
	Spruce-pine-fir	#1	4-8	6-11	8-9	10-8	12-4	4-5	6-6	8-3	10-0	11-8
	Spruce-pine-fir	#2	4-8	6-11	8-9	10-8	12-4	4-5	6-6	8-3	10-0	11-8
	Spruce-pine-fir	#3	3-7	5-2	6-7	8-1	9-4	3-4	4-11	6-3	7-7	8-10

Check sources for availability of lumber in lengths greater than 20 feet.

For SI: 1 inch = 25.4 mm, 1 foot = 304.8 mm, 1 pound per square foot = 0.0479 kPa.

a. The tabulated rafter spans assume that ceiling joists are located at the bottom of the attic space or that some other method of resisting the outward push of the rafters on the bearing walls, such as rafter ties, is provided at that location. Where ceiling joists or rafter ties are located higher in the attic space, the rafter spans shall be multiplied by the following factors:

H_C/H_R	Rafter Span Adjustment Factor
1/3	0.67
1/4	0.76
1/5	0.83
1/6	0.90
1/7.5 or less	1.00

where:

H_C = Height of ceiling joists or rafter ties measured vertically above the top of the rafter support walls.

H_R = Height of roof ridge measured vertically above the top of the rafter support walls.

TABLE R802.4.1(8)
RAFTER SPANS FOR COMMON LUMBER SPECIES
(Ground snow load = 70 psf, ceiling attached to rafters, L/Δ = 240)

RAFTER SPACING (Inches)	SPECIES AND GRADE		DEAD LOAD = 10 psf					DEAD LOAD = 20 psf				
			2 × 4	2 × 6	2 × 8	2 × 10	2 × 12	2 × 4	2 × 6	2 × 8	2 × 10	2 × 12
			Maximum rafter spans[a]									
			(feet - inches)	(feet - inches)	(feet - inches)	(feet - inches)	(feet - inches)	(feet - inches)	(feet - inches)	(feet - inches)	(feet - inches)	(feet - inches)
12	Douglas fir-larch	SS	6-10	10-9	14-3	18-2	22-1	6-10	10-9	14-3	18-2	21-7
	Douglas fir-larch	#1	6-7	10-5	13-2	16-1	18-8	6-7	9-10	12-5	15-2	17-7
	Douglas fir-larch	#2	6-6	9-10	12-6	15-3	17-9	6-4	9-4	11-9	14-5	16-8
	Douglas fir-larch	#3	5-2	7-7	9-7	11-8	13-6	4-10	7-1	9-0	11-0	12-9
	Hem-fir	SS	6-6	10-2	13-5	17-2	20-10	6-6	10-2	13-5	17-2	20-10
	Hem-fir	#1	6-4	10-0	13-0	15-11	18-5	6-4	9-8	12-3	15-0	17-5
	Hem-fir	#2	6-1	9-6	12-2	14-10	17-3	6-1	9-1	11-5	14-0	16-3
	Hem-fir	#3	5-0	7-4	9-4	11-5	13-2	4-9	6-11	8-9	10-9	12-5
	Southern pine	SS	6-9	10-7	14-0	17-10	21-8	6-9	10-7	14-0	17-10	21-8
	Southern pine	#1	6-6	10-2	13-5	15-9	18-8	6-6	10-0	12-8	14-10	17-7
	Southern pine	#2	6-1	9-2	11-7	13-9	16-2	5-9	8-7	10-11	12-11	15-3
	Southern pine	#3	4-8	6-11	8-9	10-7	12-6	4-5	6-6	8-3	10-0	11-10
	Spruce-pine-fir	SS	6-4	10-0	13-2	16-9	20-5	6-4	10-0	13-2	16-9	19-8
	Spruce-pine-fir	#1	6-2	9-9	12-4	15-1	17-6	6-2	9-2	11-8	14-2	16-6
	Spruce-pine-fir	#2	6-2	9-9	12-4	15-1	17-6	6-2	9-2	11-8	14-2	16-6
	Spruce-pine-fir	#3	5-0	7-4	9-4	11-5	13-2	4-9	6-11	8-9	10-9	12-5
16	Douglas fir-larch	SS	6-3	9-10	12-11	16-6	19-10	6-3	9-10	12-11	16-1	18-8
	Douglas fir-larch	#1	6-0	9-0	11-5	13-11	16-2	5-10	8-6	10-9	13-2	15-3
	Douglas fir-larch	#2	5-10	8-7	10-10	13-3	15-4	5-6	8-1	10-3	12-6	14-6
	Douglas fir-larch	#3	4-6	6-6	8-3	10-1	11-9	4-3	6-2	7-10	9-6	11-1
	Hem-fir	SS	5-11	9-3	12-2	15-7	18-11	5-11	9-3	12-2	15-7	18-0
	Hem-fir	#1	5-9	8-11	11-3	13-9	16-0	5-9	8-5	10-8	13-0	15-1
	Hem-fir	#2	5-6	8-4	10-6	12-10	14-11	5-4	7-10	9-11	12-1	14-1
	Hem-fir	#3	4-4	6-4	8-1	9-10	11-5	4-1	6-0	7-7	9-4	10-9
	Southern pine	SS	6-1	9-7	12-8	16-2	19-8	6-1	9-7	12-8	16-2	19-3
	Southern pine	#1	5-11	9-2	11-8	13-8	16-2	5-10	8-8	11-0	12-10	15-3
	Southern pine	#2	5-3	7-11	10-0	11-11	14-0	5-0	7-5	9-5	11-3	13-2
	Southern pine	#3	4-1	6-0	7-7	9-2	10-10	3-10	5-8	7-1	8-8	10-3
	Spruce-pine-fir	SS	[illegible]	[illegible]	11-11	[illegible]	[illegible]	[illegible]	[illegible]	[illegible]	[illegible]	[illegible]
	Spruce-pine-fir	#1	5-8	8-5	10-8	13-1	15-2	5-5	7-11	10-1	12-4	14-3
	Spruce-pine-fir	#2	5-8	8-5	10-8	13-1	15-2	5-5	7-11	10-1	12-4	14-3
	Spruce-pine-fir	#3	4-4	6-4	8-1	9-10	11-5	4-1	6-0	7-7	9-4	10-9
19.2	Douglas fir-larch	SS	5-10	9-3	12-2	15-6	18-1	5-10	9-3	12-0	14-8	17-1
	Douglas fir-larch	#1	5-7	8-3	10-5	12-9	14-9	5-4	7-9	9-10	12-0	13-11
	Douglas fir-larch	#2	5-4	7-10	9-11	12-1	14-0	5-0	7-4	9-4	11-5	13-2
	Douglas fir-larch	#3	4-1	6-0	7-7	9-3	10-8	3-10	5-7	7-1	8-8	10-1
	Hem-fir	SS	5-6	8-8	11-6	14-8	17-4	5-6	8-8	11-6	14-2	15-5
	Hem-fir	#1	5-5	8-2	10-3	12-7	14-7	5-3	7-8	9-8	11-10	13-9
	Hem-fir	#2	5-2	7-7	9-7	11-9	13-7	4-11	7-2	9-1	11-1	12-10
	Hem-fir	#3	4-0	5-10	7-4	9-0	10-5	3-9	5-6	6-11	8-6	9-10

(continued)

TABLE R802.4.1(8)—continued
RAFTER SPANS FOR COMMON LUMBER SPECIES
(Ground snow load = 70 psf, ceiling attached to rafters, L/Δ = 240)

RAFTER SPACING (Inches)	SPECIES AND GRADE		DEAD LOAD = 10 psf					DEAD LOAD = 20 psf				
			2 × 4	2 × 6	2 × 8	2 × 10	2 × 12	2 × 4	2 × 6	2 × 8	2 × 10	2 × 12
			Maximum rafter spans[a]									
			(feet - inches)	(feet - inches)	(feet - inches)	(feet - inches)	(feet - inches)	(feet - inches)	(feet - inches)	(feet - inches)	(feet - inches)	(feet - inches)
19.2	Southern pine	SS	5-9	9-1	11-11	15-3	18-6	5-9	9-1	11-11	14-11	17-7
	Southern pine	#1	5-6	8-5	10-8	12-5	14-9	5-4	7-11	10-0	11-9	13-11
	Southern pine	#2	4-10	7-3	9-2	10-10	12-9	4-6	6-10	8-8	10-3	12-1
	Southern pine	#3	3-8	5-6	6-11	8-4	9-11	3-6	5-2	6-6	7-11	9-4
	Spruce-pine-fir	SS	5-5	8-6	11-3	14-3	16-6	5-5	8-6	11-0	13-5	15-7
	Spruce-pine-fir	#1	5-3	7-8	9-9	11-11	13-10	5-0	7-3	9-2	11-3	13-0
	Spruce-pine-fir	#2	5-3	7-8	9-9	11-11	13-10	5-0	7-3	9-2	11-3	13-0
	Spruce-pine-fir	#3	4-0	5-10	7-4	9-0	10-5	3-9	5-6	6-11	8-6	9-10
24	Douglas fir-larch	SS	5-5	8-7	11-3	13-11	16-2	5-5	8-6	10-9	13-2	15-3
	Douglas fir-larch	#1	5-0	7-4	9-4	11-5	13-2	4-9	6-11	8-9	10-9	12-5
	Douglas fir-larch	#2	4-9	7-0	8-10	10-10	12-6	4-6	6-7	8-4	10-2	11-10
	Douglas fir-larch	#3	3-8	5-4	6-9	8-3	9-7	3-5	5-0	6-4	7-9	9-0
	Hem-fir	SS	5-2	8-1	10-8	13-6	13-11	5-2	8-1	10-5	12-4	12-4
	Hem-fir	#1	5-0	7-3	9-2	11-3	13-0	4-8	6-10	8-8	10-7	12-4
	Hem-fir	#2	4-8	6-9	8-7	10-6	12-2	4-4	6-5	8-1	9-11	11-6
	Hem-fir	#3	3-7	5-2	6-7	8-1	9-4	3-4	4-11	6-3	7-7	8-10
	Southern pine	SS	5-4	8-5	11-1	14-2	16-8	5-4	8-5	11-1	13-4	15-9
	Southern pine	#1	5-0	7-6	9-6	11-1	13-2	4-9	7-1	9-0	10-6	12-5
	Southern pine	#2	4-4	6-5	8-2	9-9	11-5	4-1	6-1	7-9	9-2	10-9
	Southern pine	#3	3-4	4-11	6-2	7-6	8-10	3-1	4-7	5-10	7-1	8-4
	Spruce-pine-fir	SS	5-0	7-11	10-5	12-9	14-9	5-0	7-9	9-10	12-0	12-11
	Spruce-pine-fir	#1	4-8	6-11	8-9	10-8	12-4	4-5	6-6	8-3	10-0	11-8
	Spruce-pine-fir	#2	4-8	6-11	8-9	10-8	12-4	4-5	6-6	8-3	10-0	11-8
	Spruce-pine-fir	#3	3-7	5-2	6-7	8-1	9-4	3-4	4-11	6-3	7-7	8-10

Check sources for availability of lumber in lengths greater than 20 feet.

For SI: 1 inch = 25.4 mm, 1 foot = 304.8 mm, 1 pound per square foot = 0.0479 kPa.

a. The tabulated rafter spans assume that ceiling joists are located at the bottom of the attic space or that some other method of resisting the outward push of the rafters on the bearing walls, such as rafter ties, is provided at that location. Where ceiling joists or rafter ties are located higher in the attic space, the rafter spans shall be multiplied by the following factors:

H_C/H_R	Rafter Span Adjustment Factor
1/3	0.67
1/4	0.76
1/5	0.83
1/6	0.90
1/7.5 or less	1.00

where:

H_c = Height of ceiling joists or rafter ties measured vertically above the top of the rafter support walls.

H_R = Height of roof ridge measured vertically above the top of the rafter support walls.

R802.4.3 Hips and valleys. Hip and valley rafters shall be not less than 2 inches (51 mm) nominal in thickness and not less in depth than the cut end of the rafter. Hip and valley rafters shall be supported at the ridge by a brace to a bearing partition or be designed to carry and distribute the specific load at that point.

R802.4.4 Rafter supports. Where the roof pitch is less than 3:12 (25-percent slope), structural members that support rafters, such as ridges, hips and valleys, shall be designed as beams, and bearing shall be provided for rafters in accordance with Section R802.6.

R802.4.5 Purlins. Installation of purlins to reduce the span of rafters is permitted as shown in Figure R802.4.5. Purlins shall be sized not less than the required size of the rafters that they support. Purlins shall be continuous and shall be supported by 2-inch by 4-inch (51 mm by 102 mm) braces installed to bearing walls at a slope not less than 45 degrees (0.79 rad) from the horizontal. The braces shall be spaced not more than 4 feet (1219 mm) on center and the unbraced length of braces shall not exceed 8 feet (2438 mm).

R802.4.6 Collar ties. Where collar ties are used to connect opposing rafters, they shall be located in the upper third of the attic space and fastened in accordance with Table R602.3(1). Collar ties shall be not less than 1 inch by 4 inches (25 mm × 102 mm) nominal, spaced not more than 4 feet (1220 mm) on center. Ridge straps in accordance with Table R602.3(1) shall be permitted to replace collar ties.

R802.5 Ceiling joists. Ceiling joists shall be continuous across the structure or securely joined where they meet over interior partitions in accordance with Table R802.5.2.

R802.5.1 Ceiling joist size. Ceiling joists shall be sized based on the joist spans in Tables R802.5.1(1) and R802.5.1(2). For other grades and species and for other loading conditions, refer to the AWC STJR.

R802.5.2 Ceiling joist and rafter connections. Where ceiling joists run parallel to rafters, they shall be connected to rafters at the top wall plate in accordance with Table R802.5.2. Where ceiling joists are not connected to the rafters at the top wall plate, they shall be installed in the bottom third of the rafter height in accordance with Figure R802.4.5 and Table R802.5.2. Where the ceiling joists are installed above the bottom third of the rafter height, the ridge shall be designed as a beam.Where ceiling joists do not run parallel to rafters, the ceiling joists shall be connected to top plates in accordance with Table R602.3(1). Each rafter shall be tied across the structure with a rafter tie or a 2-inch by 4-inch (51 mm × 102 mm) kicker connected to the ceiling diaphragm with nails equivalent in capacity to Table R802.5.2.

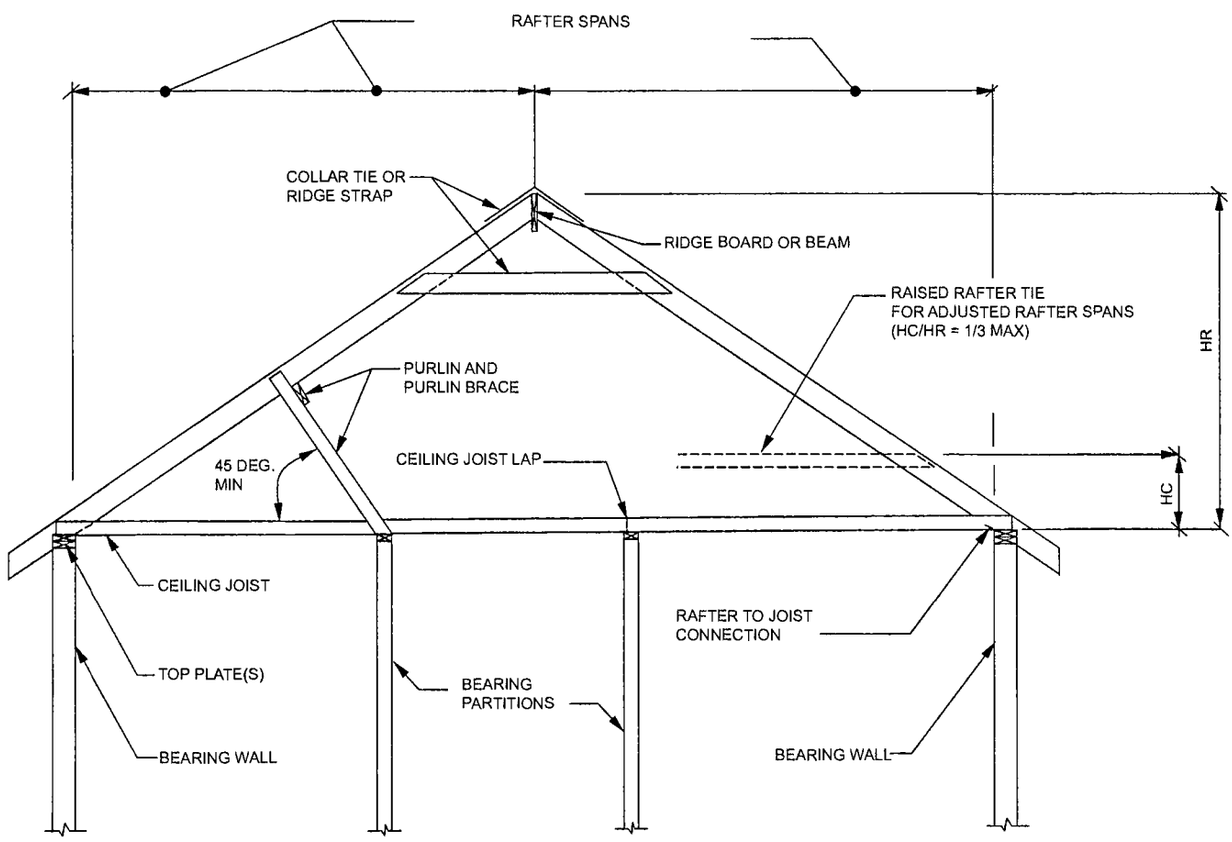

For SI: 1 inch = 25.4 mm, 1 foot = 305 mm, 1 degree = 0.018 rad.

H_C = Height of ceiling joists or rafter ties measured vertically above the top of rafter support walls.

H_R = Height of roof ridge measured vertically above the top of the rafter support walls.

FIGURE R802.4.5
BRACED RAFTER CONSTRUCTION

TABLE R802.5.1(1)
CEILING JOIST SPANS FOR COMMON LUMBER SPECIES
(Uninhabitable attics without storage, live load = 10 psf, L/Δ = 240)

CEILING JOIST SPACING (inches)	SPECIES AND GRADE		DEAD LOAD = 5 psf			
			2 × 4	2 × 6	2 × 8	2 × 10
			Maximum ceiling joist spans			
			(feet - inches)	(feet - inches)	(feet - inches)	(feet - inches)
12	Douglas fir-larch	SS	13-2	20-8	Note a	Note a
	Douglas fir-larch	#1	12-8	19-11	Note a	Note a
	Douglas fir-larch	#2	12-5	19-6	25-8	Note a
	Douglas fir-larch	#3	11-1	16-3	20-7	25-2
	Hem-fir	SS	12-5	19-6	25-8	Note a
	Hem-fir	#1	12-2	19-1	25-2	Note a
	Hem-fir	#2	11-7	18-2	24-0	Note a
	Hem-fir	#3	10-10	15-10	20-1	24-6
	Southern pine	SS	12-11	20-3	Note a	Note a
	Southern pine	#1	12-5	19-6	25-8	Note a
	Southern pine	#2	11-10	18-8	24-7	Note a
	Southern pine	#3	10-1	14-11	18-9	22-9
	Spruce-pine-fir	SS	12-2	19-1	25-2	Note a
	Spruce-pine-fir	#1	11-10	18-8	24-7	Note a
	Spruce-pine-fir	#2	11-10	18-8	24-7	Note a
	Spruce-pine-fir	#3	10-10	15-10	20-1	24-6
16	Douglas fir-larch	SS	11-11	18-9	24-8	Note a
	Douglas fir-larch	#1	11-6	18-1	23-10	Note a
	Douglas fir-larch	#2	11-3	17-8	23-4	Note a
	Douglas fir-larch	#3	9-7	14-1	17-10	21-9
	Hem-fir	SS	11-3	17-8	23-4	Note a
	Hem-fir	#1	11-0	17-4	22-10	Note a
	Hem-fir	#2	10-6	16-6	21-9	Note a
	Hem-fir	#3	9-5	13-9	17-5	21-3
	Southern pine	SS	11-9	18-5	24-3	Note a
	Southern pine	#1	11-3	17-8	23-10	Note a
	Southern pine	#2	10-9	16-11	21-7	25-7
	Southern pine	#3	8-9	12-11	16-3	19-9
	Spruce-pine-fir	SS	11-0	17-4	22-10	Note a
	Spruce-pine-fir	#1	10-9	16-11	22-4	Note a
	Spruce-pine-fir	#2	10-9	16-11	22-4	Note a
	Spruce-pine-fir	#3	9-5	13-9	17-5	21-3

(continued)

TABLE R802.5.1(1)—continued
CEILING JOIST SPANS FOR COMMON LUMBER SPECIES
(Uninhabitable attics without storage, live load = 10 psf, L/Δ = 240)

CEILING JOIST SPACING (inches)	SPECIES AND GRADE		DEAD LOAD = 5 psf			
			2 × 4	2 × 6	2 × 8	2 × 10
			Maximum ceiling joist spans			
			(feet - inches)	(feet - inches)	(feet - Inches)	(feet - inches)
19.2	Douglas fir-larch	SS	11-3	17-8	23-3	Note a
	Douglas fir-larch	#1	10-10	17-0	22-5	Note a
	Douglas fir-larch	#2	10-7	16-8	21-4	26-0
	Douglas fir-larch	#3	8-9	12-10	16-3	19-10
	Hem-fir	SS	10-7	16-8	21-11	Note a
	Hem-fir	#1	10-4	16-4	21-6	Note a
	Hem-fir	#2	9-11	15-7	20-6	25-3
	Hem-fir	#3	8-7	12-6	15-10	19-5
	Southern -pine	SS	11-0	17-4	22-10	Note a
	Southern pine	#1	10-7	16-8	22-0	Note a
	Southern pine	#2	10-2	15-7	19-8	23-5
	Southern pine	#3	8-0	11-9	14-10	18-0
	Spruce-pine-fir	SS	10-4	16-4	21-6	Note a
	Spruce-pine-fir	#1	10-2	15-11	21-0	25-8
	Spruce-pine-fir	#2	10-2	15-11	21-0	25-8
	Spruce-pine-fir	#3	8-7	12-6	15-10	19-5
24	Douglas fir-larch	SS	10-5	16-4	21-7	Note a
	Douglas fir-larch	#1	10-0	15-9	20-1	24-6
	Douglas fir-larch	#2	9-10	15-0	19-1	23-3
	Douglas fir-larch	#3	7-10	11-6	14-7	17-9
	Hem-fir	SS	9-10	15-6	20-5	Note a
	Hem-fir	#1	9-8	15-2	19-10	24-3
	Hem-fir	#2	9-2	14-5	18-6	22-7
	Hem-fir	#3	7-8	11-2	14-2	17-4
	Southern pine	SS	10-3	16-1	21-2	Note a
	Southern pine	#1	9-10	15-6	20-5	24-0
	Southern pine	#2	9-3	13-11	17-7	20-11
	Southern pine	#3	7-2	10-6	13-3	16-1
	Spruce-pine-fir	SS	[illegible]	[illegible]	[illegible]	[illegible]
	Spruce-pine-fir	#1	9-5	14-9	18-9	22-11
	Spruce-pine-fir	#2	9-5	14-9	18-9	22-11
	Spruce-pine-fir	#3	7-8	11-2	14-2	17-4

Check sources for availability of lumber in lengths greater than 20 feet

For SI: 1 inch = 25.4 mm, 1 foot = 304.8 mm, 1 pound per square foot = 0.0479 kPa

a. Span exceeds 26 feet in length.

TABLE R802.5.1(2)
CEILING JOIST SPANS FOR COMMON LUMBER SPECIES
(Uninhabitable attics with limited storage, live load = 20 psf, L/Δ = 240)

CEILING JOIST SPACING (inches)	SPECIES AND GRADE		DEAD LOAD = 10 psf			
			2 × 4	2 × 6	2 × 8	2 × 10
			Maximum ceiling joist spans			
			(feet - inches)	(feet - inches)	(feet - inches)	(feet - inches)
12	Douglas fir-larch	SS	10-5	16-4	21-7	Note a
	Douglas fir-larch	#1	10-0	15-9	20-1	24-6
	Douglas fir-larch	#2	9-10	15-0	19-1	23-3
	Douglas fir-larch	#3	7-10	11-6	14-7	17-9
	Hem-fir	SS	9-10	15-6	20-5	Note a
	Hem-fir	#1	9-8	15-2	19-10	24-3
	Hem-fir	#2	9-2	14-5	18-6	22-7
	Hem-fir	#3	7-8	11-2	14-2	17-4
	Southern pine	SS	10-3	16-1	21-2	Note a
	Southern pine	#1	9-10	15-6	20-5	24-0
	Southern pine	#2	9-3	13-11	17-7	20-11
	Southern pine	#3	7-2	10-6	13-3	16-1
	Spruce-pine-fir	SS	9-8	15-2	19-11	25-5
	Spruce-pine-fir	#1	9-5	14-9	18-9	22-11
	Spruce-pine-fir	#2	9-5	14-9	18-9	22-11
	Spruce-pine-fir	#3	7-8	11-2	14-2	17-4
16	Douglas fir-larch	SS	9-6	14-11	19-7	25-0
	Douglas fir-larch	#1	9-1	13-9	17-5	21-3
	Douglas fir-larch	#2	8-11	13-0	16-6	20-2
	Douglas fir-larch	#3	6-10	9-11	12-7	15-5
	Hem-fir	SS	8-11	14-1	18-6	23-8
	Hem-fir	#1	8-9	13-7	17-2	21-0
	Hem-fir	#2	8-4	12-8	16-0	19-7
	Hem-fir	#3	6-8	9-8	12-4	15-0
	Southern pine	SS	9-4	14-7	19-3	24-7
	Southern pine	#1	8-11	14-0	17-9	20-9
	Southern pine	#2	8-0	12-0	15-3	18-1
	Southern pine	#3	6-2	9-2	11-6	14-0
	Spruce-pine-fir	SS	8-9	13-9	18-1	23-1
	Spruce-pine-fir	#1	8-7	12-10	16-3	19-10
	Spruce-pine-fir	#2	8-7	12-10	16-3	19-10
	Spruce-pine-fir	#3	6-8	9-8	12-4	15-0

(continued)

TABLE R802.5.1(2)—continued
CEILING JOIST SPANS FOR COMMON LUMBER SPECIES
(Uninhabitable attics with limited storage, live load = 20 psf, L/Δ = 240)

CEILING JOIST SPACING (inches)	SPECIES AND GRADE		DEAD LOAD = 10 psf			
			2 × 4	2 × 6	2 × 8	2 × 10
			Maximum ceiling joist spans			
			(feet - inches)	(feet - inches)	(feet - inches)	(feet - inches)
19.2	Douglas fir-larch	SS	8-11	14-0	18-5	23-7
	Douglas fir-larch	#1	8-7	12-6	15-10	19-5
	Douglas fir-larch	#2	8-2	11-11	15-1	18-5
	Douglas fir-larch	#3	6-2	9-1	11-6	14-1
	Hem-fir	SS	8-5	13-3	17-5	22-3
	Hem-fir	#1	8-3	12-4	15-8	19-2
	Hem-fir	#2	7-10	11-7	14-8	17-10
	Hem-fir	#3	6-1	8-10	11-3	13-8
	Southern pine	SS	8-9	13-9	18-2	23-1
	Southern pine	#1	8-5	12-9	16-2	18-11
	Southern pine	#2	7-4	11-0	13-11	16-6
	Southern pine	#3	5-8	8-4	10-6	12-9
	Spruce-pine-fir	SS	8-3	12-11	17-1	21-8
	Spruce-pine-fir	#1	8-0	11-9	14-10	18-2
	Spruce-pine-fir	#2	8-0	11-9	14-10	18-2
	Spruce-pine-fir	#3	6-1	8-10	11-3	13-8
24	Douglas fir-larch	SS	8-3	13-0	17-2	21-3
	Douglas fir-larch	#1	7-8	11-2	14-2	17-4
	Douglas fir-larch	#2	7-3	10-8	13-6	16-5
	Douglas fir-larch	#3	5-7	8-1	10-3	12-7
	Hem-fir	SS	7-10	12-3	16-2	20-6
	Hem-fir	#1	7-7	11-1	14-0	17-1
	Hem-fir	#2	7-1	10-4	13-1	16-0
	Hem-fir	#3	5-5	7-11	10-0	12-3
	Southern pine	SS	8-1	12-9	16-10	21-6
	Southern pine	#1	7-8	11-5	14-6	16-11
	Southern pine	#2	6-7	9-10	12-6	14-9
	Southern pine	#3	5-1	7-5	9-5	11-5
	Spruce-pine-fir	SS	[illegible]	12-[illegible]	[illegible]	[illegible]
	Spruce-pine-fir	#1	7-2	10-6	13-3	16-3
	Spruce-pine-fir	#2	7-2	10-6	13-3	16-3
	Spruce-pine-fir	#3	5-5	7-11	10-0	12-3

Check sources for availability of lumber in lengths greater than 20 feet.

For SI: 1 inch = 25.4 mm, 1 foot = 304.8 mm, 1 pound per square foot = 0.0479 kPa

a. Span exceeds 26 feet in length.

TABLE R802.5.2
RAFTER/CEILING JOIST HEEL JOINT CONNECTIONS[a, b, c, d, e, g]

RAFTER SLOPE	RAFTER SPACING (Inches)	GROUND SNOW LOAD (psf)															
		20[f]				30				50				70			
		Roof span (feet)															
		12	20	28	36	12	20	28	36	12	20	28	36	12	20	28	36
		Required number of 16d common nails[a, b] per heel joint splices[c, d, e]															
3:12	12	4	6	8	10	4	6	8	11	5	8	12	15	6	11	15	20
	16	5	8	10	13	5	8	11	14	6	11	15	20	8	14	20	26
	24	7	11	15	19	7	11	16	21	9	16	23	30	12	21	30	39
4:12	12	3	5	6	8	3	5	6	8	4	6	9	11	5	8	12	15
	16	4	6	8	10	4	6	8	11	5	8	12	15	6	11	15	20
	24	5	8	12	15	5	9	12	16	7	12	17	22	9	16	23	29
5:12	12	3	4	5	6	3	4	5	7	3	5	7	9	4	7	9	12
	16	3	5	6	8	3	5	7	9	4	7	9	12	5	9	12	16
	24	4	7	9	12	4	7	10	13	6	10	14	18	7	13	18	23
7:12	12	3	4	4	5	3	3	4	5	3	4	5	7	3	5	7	9
	16	3	4	5	6	3	4	5	6	3	5	7	9	4	6	9	11
	24	3	5	7	9	3	5	7	9	4	7	10	13	5	9	13	17
9:12	12	3	3	4	4	3	3	3	4	3	3	4	5	3	4	5	7
	16	3	4	4	5	3	3	4	5	3	4	5	7	3	5	7	9
	24	3	4	6	7	3	4	6	7	3	6	8	10	4	7	10	13
12:12	12	3	3	3	3	3	3	3	3	3	3	3	4	3	3	4	5
	16	3	3	4	4	3	3	3	4	3	3	4	5	3	4	5	7
	24	3	4	4	5	3	3	4	6	3	4	6	8	3	6	8	10

For SI: 1 inch = 25.4 mm, 1 foot = 304.8 mm, 1 pound per square foot = 0.0479 kPa.

a. 40d box nails shall be permitted to be substituted for 16d common nails.

b. Nailing requirements shall be permitted to be reduced 25 percent if nails are clinched.

c. Heel joint connections are not required where the ridge is supported by a load-bearing wall, header or ridge beam.

d. Where intermediate support of the rafter is provided by vertical struts or purlins to a load-bearing wall, the tabulated heel joint connection requirements shall be permitted to be reduced proportionally to the reduction in span.

e. Equivalent nailing patterns are required for ceiling joist to ceiling joist lap splices.

f. Applies to roof live load of 20 psf or less.

g. Tabulated heel joint connection requirements assume that ceiling joists or rafter ties are located at the bottom of the attic space. Where ceiling joists or rafter ties are located higher in the attic, heel joint connection requirements shall be increased by the following factors:

H_C/H_R	Heel Joint Connection Adjustment Factor
1/3	1.5
1/4	1.33
1/5	1.25
1/6	1.2
1/10 or less	1.11

where:

H_C = Height of ceiling joists or rafter ties measured vertically above the top of the rafter support walls.

H_R = Height of roof ridge measured vertically above the top of the rafter support walls.

R802.5.2.1 Ceiling joists lapped. Ends of ceiling joists shall be lapped not less than 3 inches (76 mm) or butted over bearing partitions or beams and toenailed to the bearing member. Where ceiling joists are used to provide resistance to rafter thrust, lapped joists shall be nailed together in accordance with Table R802.5.2 and butted joists shall be tied together in a manner to resist such thrust. Joists that do not resist thrust shall be permitted to be nailed in accordance with Table R602.3(1). Wood structural panel roof sheathing, in accordance with Table R503.2.1.1(1), shall not cantilever more than 9 inches (229 mm) beyond the gable endwall unless supported by gable overhang framing.

R802.5.2.2 Rafter ties. Wood rafter ties shall be not less than 2 inches by 4 inches (51 mm × 102 mm) installed in accordance with Table R802.5.2 at each rafter. Other approved rafter tie methods shall be permitted.

R802.5.2.3 Blocking. Blocking shall be not less than utility grade lumber.

R802.6 Bearing. The ends of each rafter or ceiling joist shall have not less than $1^1/_2$ inches (38 mm) of bearing on wood or metal and not less than 3 inches (76 mm) on masonry or concrete. The bearing on masonry or concrete shall be direct, or a sill plate of 2-inch (51 mm) minimum nominal thickness shall be provided under the rafter or ceiling joist. The sill plate shall provide a minimum nominal bearing area of 48 square inches (30 865 mm^2).

R802.6.1 Finished ceiling material. If the finished ceiling material is installed on the ceiling prior to the attachment of the ceiling to the walls, such as in construction at a factory, a compression strip of the same thickness as the finished ceiling material shall be installed directly above the top plate of bearing walls if the compressive strength of the finished ceiling material is less than the loads it will be required to withstand. The compression strip shall cover the entire length of such top plate and shall be not less than one-half the width of the top plate. It shall be of material capable of transmitting the loads transferred through it.

R802.7 Cutting, drilling and notching. Structural roof members shall not be cut, bored or notched in excess of the limitations specified in this section.

R802.7.1 Sawn lumber. Cuts, notches and holes in solid lumber joists, rafters, blocking and beams shall comply with the provisions of Section R502.8.1 except that cantilevered portions of rafters shall be permitted in accordance with Section R802.7.1.1.

R802.7.1.1 Cantilevered portions of rafters. Notches on cantilevered portions of rafters are permitted provided the dimension of the remaining portion of the rafter is not less than $3^1/_2$ inches (89 mm) and the length of the cantilever does not exceed 24 inches (610 mm) in accordance with Figure R802.7.1.1.

R802.7.1.2 Ceiling joist taper cut. Taper cuts at the ends of the ceiling joist shall not exceed one-fourth the depth of the member in accordance with Figure R802.7.1.2.

R802.7.2 Engineered wood products. Cuts, notches and holes bored in trusses, structural composite lumber, structural glue-laminated members, cross-laminated timber members or I-joists are prohibited except where permitted by the manufacturer's recommendations or where the effects of such alterations are specifically considered in the design of the member by a registered design professional.

R802.8 Lateral support. Roof framing members and ceiling joists having a depth-to-thickness ratio exceeding 5 to 1 based on nominal dimensions shall be provided with lateral

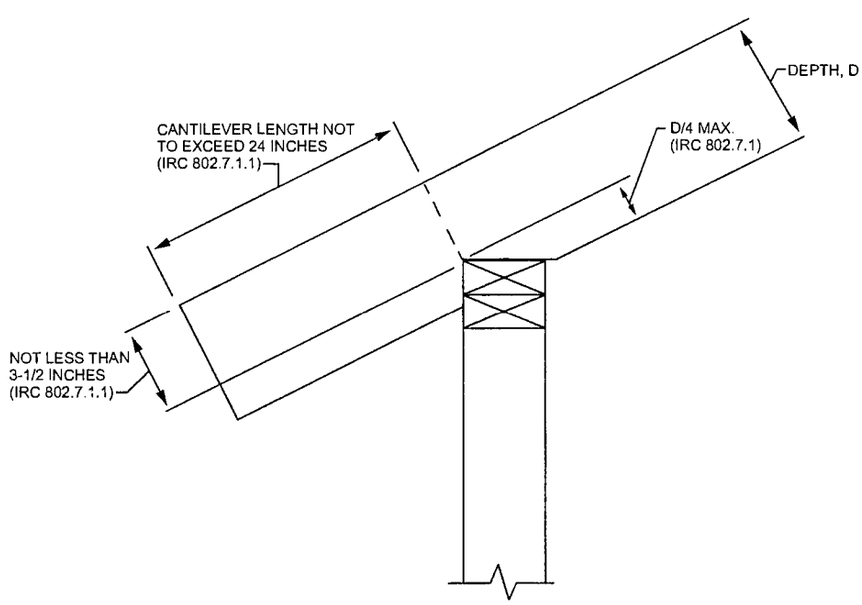

For SI: 1 inch = 25.4 mm.

FIGURE R802.7.1.1
RAFTER NOTCH

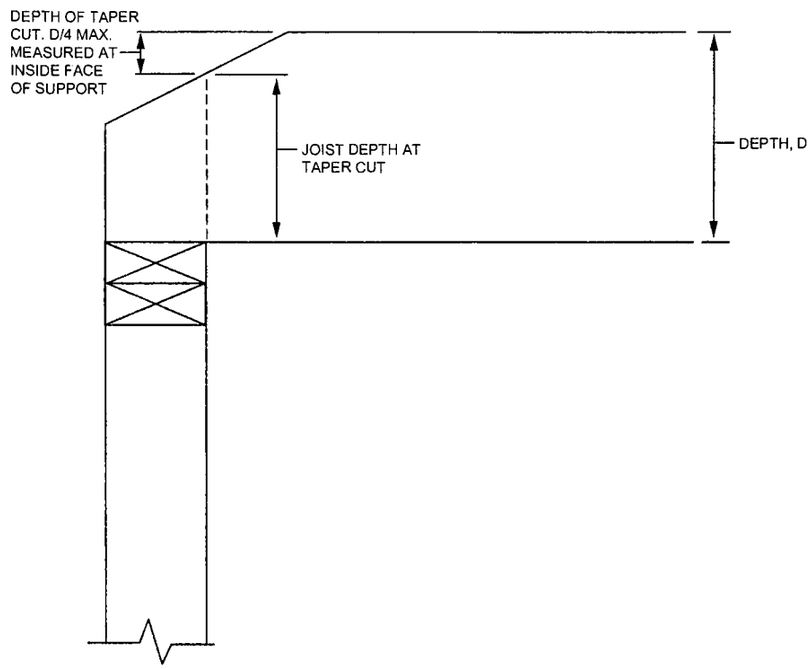

FIGURE R802.7.1.2
CEILING JOIST TAPER CUT

support at points of bearing to prevent rotation. For roof rafters with ceiling joists attached in accordance with Table R602.3(1), the depth-to-thickness ratio for the total assembly shall be determined using the combined thickness of the rafter plus the attached ceiling joist.

Exception: Roof trusses shall be braced in accordance with Section R802.10.3.

R802.8.1 Bridging. Rafters and ceiling joists having a depth-to-thickness ratio exceeding 6 to 1 based on nominal dimensions shall be supported laterally by solid blocking, diagonal bridging (wood or metal) or a continuous 1-inch by 3-inch (25 mm by 76 mm) wood strip nailed across the rafters or ceiling joists at intervals not exceeding 8 feet (2438 mm).

R802.9 Framing of openings. Openings in roof and ceiling framing shall be framed with header and trimmer joists. Where the header joist span does not exceed 4 feet (1219 mm), the header joist shall be permitted to be a single member the same size as the ceiling joist or rafter. Single trimmer joists shall be permitted to be used to carry a single header joist that is located within 3 feet (914 mm) of the trimmer joist bearing. Where the header joist span exceeds 4 feet (1219 mm), the trimmer joists and the header joist shall be doubled and of sufficient cross section to support the ceiling joists or rafter framing into the header. Approved hangers shall be used for the header joist to trimmer joist connections where the header joist span exceeds 6 feet (1829 mm). Tail joists over 12 feet (3658 mm) long shall be supported at the header by framing anchors or on ledger strips not less than 2 inches by 2 inches (51 mm by 51 mm).

R802.10 Wood trusses.

R802.10.1 Truss design drawings. Truss design drawings, prepared in conformance to Section R802.10.1, shall be provided to the building official and approved prior to installation. Truss design drawings shall be provided with the shipment of trusses delivered to the job site. Truss design drawings shall include, at a minimum, the following information:

1. Slope or depth, span and spacing.
2. Location of all joints.
3. Required bearing widths.
4. Design loads as applicable.
   - 4.1. Top chord live load (as determined from Section R301.6).
   - 4.2. Top chord dead load.
   - 4.3. Bottom chord live load.
   - 4.4. Bottom chord dead load.
   - 4.5. Concentrated loads and their points of application.
   - 4.6. Controlling wind and earthquake loads.
5. Adjustments to lumber and joint connector design values for conditions of use.
6. Each reaction force and direction.
7. Joint connector type and description such as size, thickness or gage and the dimensioned location of each joint connector except where symmetrically located relative to the joint interface.
8. Lumber size, species and grade for each member.
9. Connection requirements for:
   - 9.1. Truss to girder-truss.
   - 9.2. Truss ply to ply.
   - 9.3. Field splices.

10. Calculated deflection ratio or maximum description for live and total load.
11. Maximum axial compression forces in the truss members to enable the building designer to design the size, connections and anchorage of the permanent continuous lateral bracing. Forces shall be shown on the truss design drawing or on supplemental documents.
12. Required permanent truss member bracing location.

R802.10.2 Design. Wood trusses shall be designed in accordance with accepted engineering practice. The design and manufacture of metal-plate-connected wood trusses shall comply with ANSI/TPI 1. The truss design drawings shall be prepared by a registered *design* professional.

R802.10.2.1 Applicability limits. The provisions of this section shall control the design of truss roof framing where snow controls for buildings that are not greater than 60 feet (18 288 mm) in length perpendicular to the joist, rafter or truss span, not greater than 36 feet (10 973 mm) in width parallel to the joist, rafter or truss span, not more than three stories above grade plane in height, and have roof slopes not smaller than 3:12 (25-percent slope) or greater than 12:12 (100-percent slope). Truss roof framing constructed in accordance with the provisions of this section shall be limited to sites subjected to a maximum design wind speed of 140 miles per hour (63 m/s), Exposure B or C, and a maximum ground snow load of 70 psf (3352 Pa). For consistent loading of all truss types, roof snow load is to be computed as: 0.7 p_g.

R802.10.3 Bracing. Trusses shall be braced to prevent rotation and provide lateral stability in accordance with the requirements specified in the construction documents for the building and on the individual truss design drawings. In the absence of specific bracing requirements, trusses shall be braced in accordance with accepted industry practice such as the SBCA *Building Component Safety Information (BCSI) Guide to Good Practice for Handling, Installing & Bracing of Metal Plate Connected Wood Trusses.*

R802.10.4 Alterations to trusses. Truss members shall not be cut, notched, drilled, spliced or otherwise altered in any way without the approval of a registered design professional. Alterations resulting in the addition of load such as HVAC equipment water heater that exceeds the design load for the truss shall not be permitted without verification that the truss is capable of supporting such additional loading.

R802.11 Roof tie-down.

R802.11.1 Uplift resistance. Roof assemblies shall have uplift resistance in accordance with Sections R802.11.1.1 and R802.11.1.2.

Where the uplift force does not exceed 200 pounds (90.8 kg), rafters and trusses spaced not more than 24 inches (610 mm) on center shall be permitted to be attached to their supporting wall assemblies in accordance with Table R602.3(1).

Where the basic wind speed does not exceed 115 mph, the wind exposure category is B, the roof pitch is 5:12 (42-percent slope) or greater, and the roof span is 32 feet (9754 mm) or less, rafters and trusses spaced not more than 24 inches (610 mm) on center shall be permitted to be attached to their supporting wall assemblies in accordance with Table R602.3(1).

R802.11.1.1 Truss uplift resistance. Trusses shall be attached to supporting wall assemblies by connections capable of resisting uplift forces as specified on the truss design drawings for the ultimate design wind speed as determined by Figure R301.2(5)A and listed in Table R301.2(1) or as shown on the construction documents. Uplift forces shall be permitted to be determined as specified by Table R802.11, if applicable, or as determined by accepted engineering practice.

R802.11.1.2 Rafter uplift resistance. Individual rafters shall be attached to supporting wall assemblies by connections capable of resisting uplift forces as determined by Table R802.11 or as determined by accepted engineering practice. Connections for beams used in a roof system shall be designed in accordance with accepted engineering practice.

SECTION R803
ROOF SHEATHING

R803.1 Lumber sheathing. Allowable spans for lumber used as roof sheathing shall conform to Table R803.1. Spaced lumber sheathing for wood shingle and shake roofing shall conform to the requirements of Sections R905.7 and R905.8. Spaced lumber sheathing is not allowed in Seismic Design Category D_2.

TABLE R803.1
MINIMUM THICKNESS OF LUMBER ROOF SHEATHING

RAFTER OR BEAM SPACING (Inches)	MINIMUM NET THICKNESS (inches)
24	$^5/_8$
48[a]	$1^1/_2$ T & G
60[b]	
72[c]	

For SI: 1 inch = 25.4 mm.
a. Minimum 270 F_b, 340,000 E.
b. Minimum 420 F_b, 660,000 E.
c. Minimum 600 F_b, 1,150,000 E.

R803.2 Wood structural panel sheathing.

R803.2.1 Identification and grade. Wood structural panels shall conform to DOC PS 1, DOC PS 2, CSA O437 or CSA O325, and shall be identified for grade, bond classification and performance category by a grade mark or certificate of inspection issued by an approved agency. Wood structural panels shall comply with the grades specified in Table R503.2.1.1(1).

TABLE R802.11
RAFTER OR TRUSS UPLIFT CONNECTION FORCES FROM WIND (ASD) (POUNDS PER CONNECTION)[a, b, c, d, e, f, g, h]

RAFTER OR TRUSS SPACING	ROOF SPAN (feet)	EXPOSURE B									
		Ultimate Design Wind Speed V_{ULT} (mph)									
		110		115		120		130		140	
		Roof Pitch		Roof Pitch		Roof Pitch		Roof Pitch		Roof Pitch	
		< 5:12	≥ 5:12	< 5:12	≥ 5:12	< 5:12	≥ 5:12	< 5:12	≥ 5:12	< 5:12	≥ 5:12
12″ o.c.	12	48	43	59	53	70	64	95	88	122	113
	18	59	52	74	66	89	81	122	112	157	146
	24	71	62	89	79	108	98	149	137	192	178
	28	79	69	99	88	121	109	167	153	216	200
	32	86	75	109	97	134	120	185	170	240	222
	36	94	82	120	106	146	132	203	186	264	244
	42	106	92	135	120	166	149	230	211	300	278
	48	118	102	151	134	185	166	258	236	336	311
16″ o.c.	12	64	57	78	70	93	85	126	117	162	150
	18	78	69	98	88	118	108	162	149	209	194
	24	94	82	118	105	144	130	198	182	255	237
	28	105	92	132	117	161	145	222	203	287	266
	32	114	100	145	129	178	160	246	226	319	295
	36	125	109	160	141	194	176	270	247	351	325
	42	141	122	180	160	221	198	306	281	399	370
	48	157	136	201	178	246	221	343	314	447	414
24″ o.c.	12	96	86	118	106	140	128	190	176	244	226
	18	118	104	148	132	178	162	244	224	314	292
	24	142	124	178	158	216	196	298	274	384	356
	28	158	138	198	176	242	218	334	306	432	400
	32	172	150	218	194	268	240	370	340	480	444
	36	188	164	240	212	292	264	406	372	528	488
	42	212	184	270	240	332	298	460	422	600	556
	48	236	204	302	268	370	332	516	472	672	622

(continued)

TABLE R802.11—continued
RAFTER OR TRUSS UPLIFT CONNECTION FORCES FROM WIND (ASD) (POUNDS PER CONNECTION)[a, b, c, d, e, f, g, h]

RAFTER OR TRUSS SPACING	ROOF SPAN (feet)	EXPOSURE C									
		Ultimate Design Wind Speed V_{ULT} (mph)									
		110		115		120		130		140	
		Roof Pitch		Roof Pitch		Roof Pitch		Roof Pitch		Roof Pitch	
		< 5:12	≥ 5:12	< 5:12	≥ 5:12	< 5:12	≥ 5:12	< 5:12	≥ 5:12	< 5:12	≥ 5:12
12″ o.c.	12	95	88	110	102	126	118	161	151	198	186
	18	121	111	141	131	163	151	208	195	257	242
	24	148	136	173	160	200	185	256	239	317	298
	28	166	152	195	179	225	208	289	269	358	335
	32	184	168	216	199	249	231	321	299	398	373
	36	202	185	237	219	274	254	353	329	438	411
	42	229	210	269	248	312	289	402	375	499	468
	48	256	234	302	278	349	323	450	420	560	524
16″ o.c.	12	126	117	146	136	168	157	214	201	263	247
	18	161	148	188	174	217	201	277	259	342	322
	24	197	181	230	213	266	246	340	318	422	396
	28	221	202	259	238	299	277	384	358	476	446
	32	245	223	287	265	331	307	427	398	529	496
	36	269	246	315	291	364	338	469	438	583	547
	42	305	279	358	330	415	384	535	499	664	622
	48	340	311	402	370	464	430	599	559	745	697
24″ o.c.	12	190	176	220	204	252	236	322	302	396	372
	18	242	222	282	262	326	302	416	390	514	484
	24	296	272	346	320	400	370	512	478	634	596
	28	332	304	390	358	450	416	578	538	716	670
	32	368	336	432	398	498	462	642	598	796	746
	36	404	370	474	438	548	508	706	658	876	822
	42	458	420	538	496	624	578	804	750	998	936
	48	512	468	604	556	698	646	900	840	1120	1048

For SI: 1 inch = 25.4 mm, 1 foot = 304.8 mm, 1 mile per hour = 0.447 m/s, 1 pound = 0.454 kg, 1 pound per square foot = 47.9 N/m^2, 1 pound per linear foot = 14.6 N/m.

a. The uplift connection forces are based on a maximum 33-foot mean roof height and Wind Exposure Category B or C. For Exposure D, the uplift connection force shall be selected from the Exposure C portion of the table using the next highest tabulated ultimate design wind speed. The adjustment coefficients in Table R301.2(3) shall not be used to multiply the tabulated forces for Exposures C and D or for other mean roof heights.

b. The uplift connection forces include an allowance for roof and ceiling assembly dead load of 15 psf.

c. The tabulated uplift connection forces are limited to a maximum roof overhang of 24 inches.

d. The tabulated uplift connection forces shall be permitted to be multiplied by 0.75 for connections not located within 8 feet of building corners.

e. For buildings with hip roofs with 5:12 and greater pitch, the tabulated uplift connection forces shall be permitted to be multiplied by 0.70. This reduction shall not be combined with any other reduction in tabulated forces.

f. For wall-to-wall and wall-to-foundation connections, the uplift connection force shall be permitted to be reduced by 60 plf for each full wall above.

g. Linear interpolation between tabulated roof spans and wind speeds shall be permitted.

h. The tabulated forces for a 12-inch on-center spacing shall be permitted to be used to determine the uplift load in pounds per linear foot.

R803.2.1.1 Exposure durability. Wood structural panels, when designed to be permanently exposed in outdoor applications, shall be of an exterior exposure durability. Wood structural panel roof sheathing exposed to the underside shall be permitted to be of interior type bonded with exterior glue, identified as Exposure 1.

R803.2.1.2 Fire-retardant-treated plywood. The allowable unit stresses for fire-retardant-treated plywood, including fastener values, shall be developed from an approved method of investigation that considers the effects of anticipated temperature and humidity to which the fire-retardant-treated plywood will be subjected, the type of treatment and redrying process. The fire-retardant-treated plywood shall be graded by an approved agency.

R803.2.2 Allowable spans. The maximum allowable spans for wood structural panel roof sheathing shall not exceed the values set forth in Table R503.2.1.1(1), or APA E30.

R803.2.3 Installation. Wood structural panel used as roof sheathing shall be installed with joints staggered or not staggered in accordance with Table R602.3(1), APA E30 for wood roof framing or with Table R804.3 for cold-formed steel roof framing. Wood structural panel roof sheathing in accordance with Table R503.2.1.1(1) shall not cantilever more than 9 inches (229 mm) beyond the gable endwall unless supported by gable overhang framing.

SECTION R804
COLD-FORMED STEEL ROOF FRAMING

R804.1 General. Elements shall be straight and free of any defects that would significantly affect their structural performance. Cold-formed steel roof framing members shall be in accordance with the requirements of this section.

R804.1.1 Applicability limits. The provisions of this section shall control the construction of cold-formed steel roof framing for buildings not greater than 60 feet (18 288 mm) perpendicular to the joist, rafter or truss span, not greater than 40 feet (12 192 mm) in width parallel to the joist span or truss, less than or equal to three stories above grade plane and with roof slopes not less than 3:12 (25-percent slope) or greater than 12:12 (100-percent slope). Cold-formed steel roof framing constructed in accordance with the provisions of this section shall be limited to sites where the ultimate design wind speed is less than 140 miles per hour (63 m/s), Exposure Category B or C, and the ground snow load is less than or equal to 70 pounds per square foot (3350 Pa).

R804.1.2 In-line framing. Cold-formed steel roof framing constructed in accordance with Section R804 shall be located in line with load-bearing studs in accordance with Figure R804.1.2 and the tolerances specified as follows:

1. The maximum tolerance shall be $^3/_4$ inch (19.1 mm) between the centerline of the horizontal framing member and the centerline of the vertical framing member.

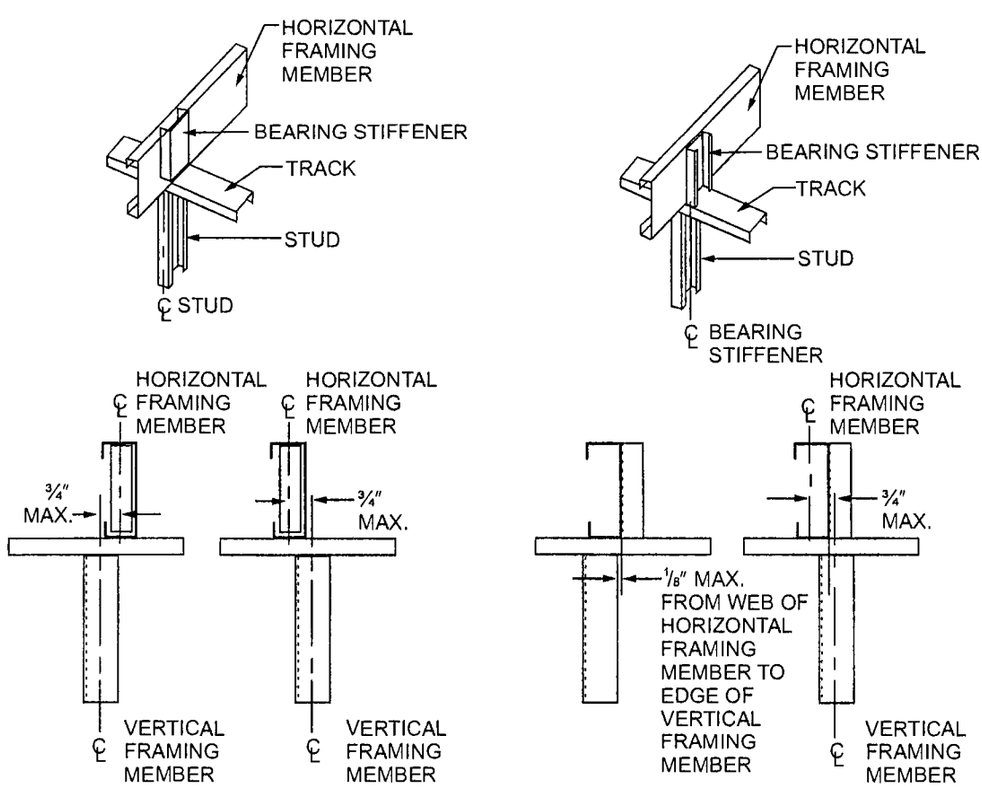

For SI: 1 inch = 25.4 mm.

FIGURE R804.1.2
IN-LINE FRAMING

2. Where the centerline of the horizontal framing member and bearing stiffener are located to one side of the centerline of the vertical framing member, the maximum tolerance shall be $^1/_8$ inch (3.2 mm) between the web of the horizontal framing member and the edge of the vertical framing member.

R804.2 Structural framing. Load-bearing, cold-formed steel roof framing members shall be in accordance with this section.

R804.2.1 Material. Load-bearing, cold-formed steel framing members shall be cold formed to shape from structural quality sheet steel complying with the requirements of ASTM A1003, Structural Grades 33 Type H and 50 Type H.

R804.2.2 Corrosion protection. Load-bearing, cold-formed steel framing shall have a metallic coating complying with ASTM A1003 and one of the following:

1. Not less than G 60 in accordance with ASTM A653.
2. Not less than AZ 50 in accordance with ASTM A792.

R804.2.3 Dimension, thickness and material grade. Load-bearing, cold-formed steel roof framing members shall comply with Figure R804.2.3(1) and with the dimensional and thickness requirements specified in Table R804.2.3. Additionally, C-shaped sections shall have a minimum flange width of 1.625 inches (41 mm) and a maximum flange width of 2 inches (51 mm). The minimum lip size for C-shaped sections shall be $^1/_2$ inch (12.7 mm). Tracks shall comply with Figure R804.2.3(2) and shall have a minimum flange width of $1^1/_4$ inches (32 mm). Minimum Grade 33 ksi steel shall be used wherever 33 mil and 43 mil thicknesses are specified. Minimum Grade 50 ksi steel shall be used wherever 54 and 68 mil thicknesses are specified.

R804.2.4 Identification. Load-bearing, cold-formed steel framing members shall have a legible label, stencil, stamp

TABLE R804.2.3
LOAD-BEARING COLD-FORMED STEEL ROOF FRAMING MEMBER SIZES AND THICKNESSES

MEMBER DESIGNATION[a]	WEB DEPTH (Inches)	MINIMUM BASE STEEL THICKNESS mil (Inches)
350S162-t	3.5	33 (0.0329), 43 (0.0428), 54 (0.0538)
550S162-t	5.5	33 (0.0329), 43 (0.0428), 54 (0.0538), 68 (0.0677)
800S162-t	8	33 (0.0329), 43 (0.0428), 54 (0.0538), 68 (0.0677)
1000S162-t	10	43 (0.0428), 54 (0.0538), 68 (0.0677)
1200S162-t	12	43 (0.0428), 54 (0.0538), 68 (0.0677)

For SI: 1 inch = 25.4 mm

a. The member designation is defined by the first number representing the member depth in hundredths of an inch, the letter "s" representing a stud or joist member, the second number representing the flange width in hundredths of an inch and the letter "t" shall be a number representing the minimum base metal thickness in mils.

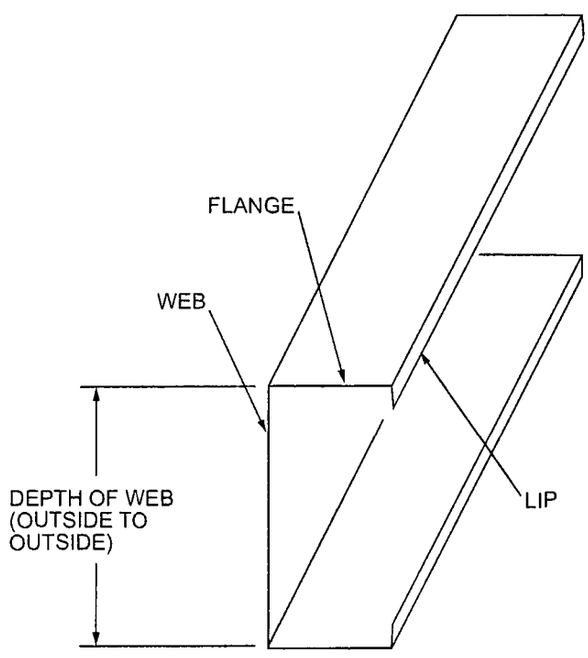

FIGURE R804.2.3(1)
C-SHAPED SECTION

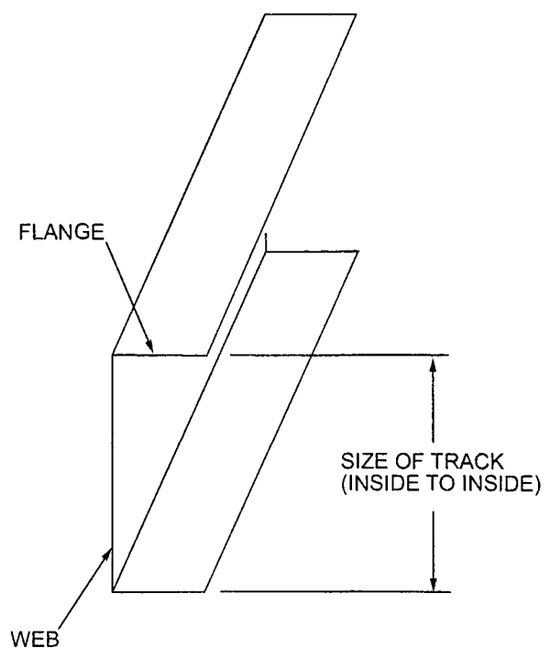

FIGURE R804.2.3(2)
TRACK SECTION

or embossment with the following information as a minimum:

1. Manufacturer's identification.
2. Minimum base steel thickness in inches (mm).
3. Minimum coating designation.
4. Minimum yield strength, in kips per square inch (ksi) (MPa).

R804.2.5 Fastening requirements. Screws for steel-to-steel connections shall be installed with a minimum edge distance and center-to-center spacing of $^1/_2$ inch (12.7 mm), shall be self-drilling tapping and shall conform to ASTM C1513. Structural sheathing shall be attached to cold-formed steel roof rafters with minimum No. 8 self-drilling tapping screws that conform to ASTM C1513. Screws for attaching structural sheathing to cold-formed steel roof framing shall have a minimum head diameter of 0.292 inch (7.4 mm) with countersunk heads and shall be installed with a minimum edge distance of $^3/_8$ inch (9.5 mm). Gypsum board ceilings shall be attached to cold-formed steel joists with minimum No. 6 screws conforming to ASTM C954 or ASTM C1513 with a bugle-head style and shall be installed in accordance with Section R805. For all connections, screws shall extend through the steel not fewer than three exposed threads. Fasteners shall have rust-inhibitive coating suitable for the installation in which they are being used, or be manufactured from material not susceptible to corrosion.

R804.2.6 Web holes, web hole reinforcing and web hole patching. Web holes, web hole reinforcing and web hole patching shall be in accordance with this section.

R804.2.6.1 Web holes. Web holes in roof framing members shall comply with all of the following conditions:

1. Holes shall conform to Figure R804.2.6.1.
2. Holes shall be permitted only along the centerline of the web of the framing member.
3. Center-to-center spacing of holes shall be not less than 24 inches (610 mm).
4. The web hole width shall be not greater than one-half the member depth, or $2^1/_2$ inches (64 mm).
5. Holes shall have a web hole length not exceeding $4^1/_2$ inches (114 mm).
6. The minimum distance between the edge of the bearing surface and the edge of the web hole shall be not less than 10 inches (254 mm).

Framing members with web holes not conforming to Items 1 though 6 shall be reinforced in accordance with Section R804.2.6.2, patched in accordance with Section R804.2.6.3 or designed in accordance with accepted engineering practices.

R804.2.6.2 Web hole reinforcing. Reinforcement of web holes in ceiling joists not conforming to the requirements of Section R804.2.6.1 shall be permitted if the hole is located fully within the center 40 percent of the span and the depth and length of the hole do not exceed 65 percent of the flat width of the web. The reinforcing shall be a steel plate or C-shaped section with a hole that does not exceed the web hole size limitations of Section R804.2.6.1 for the member being reinforced. The steel reinforcing shall be the same thickness as the receiving member and shall extend not less than 1 inch (25 mm) beyond all edges of the hole. The steel reinforcing shall be fastened to the web of the receiving member with No. 8 screws spaced not greater than 1 inch (25 mm) center to center along the edges of the patch with minimum edge distance of $^1/_2$ inch (12.7 mm).

R804.2.6.3 Hole patching. Patching of web holes in roof framing members not conforming to the requirements in Section R804.2.6.1 shall be permitted in accordance with either of the following methods:

1. Framing members shall be replaced or designed in accordance with accepted engineering practices where web holes exceed either of the following size limits:
   1.1. The depth of the hole, measured across the web, exceeds 70 percent of the flat width of the web.
   1.2. The length of the hole measured along the web, exceeds 10 inches (254 mm) or the depth of the web, whichever is greater.

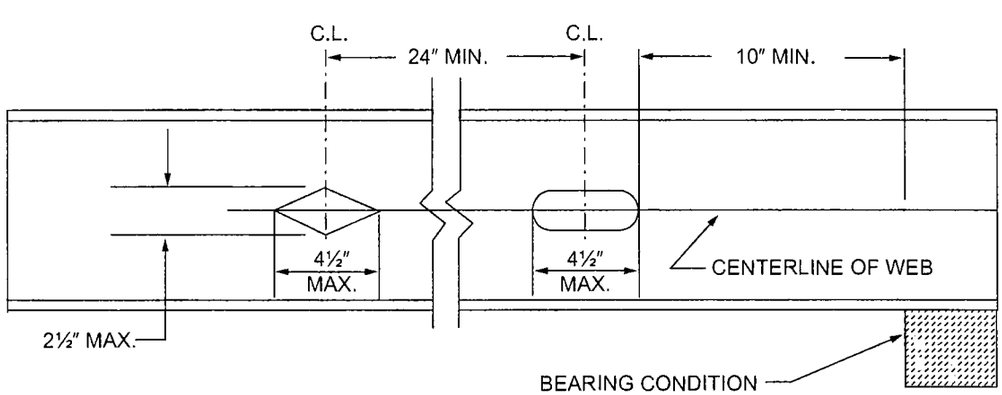

For SI: 1 inch = 25.4 mm.

FIGURE R804.2.6.1
ROOF FRAMING MEMBER WEB HOLES

2. Web holes not exceeding the dimensional requirements in Section R804.2.6.3, Item 1, shall be patched with a solid steel plate, stud section or track section in accordance with Figure R804.2.6.3. The steel patch shall, as a minimum, be the same thickness as the receiving member and shall extend not less than 1 inch (25 mm) beyond all edges of the hole. The steel patch shall be fastened to the web of the receiving member with No. 8 screws spaced not greater than 1 inch (25 mm) center-to-center along the edges of the patch with minimum edge distance of $^1/_2$ inch (12.7 mm).

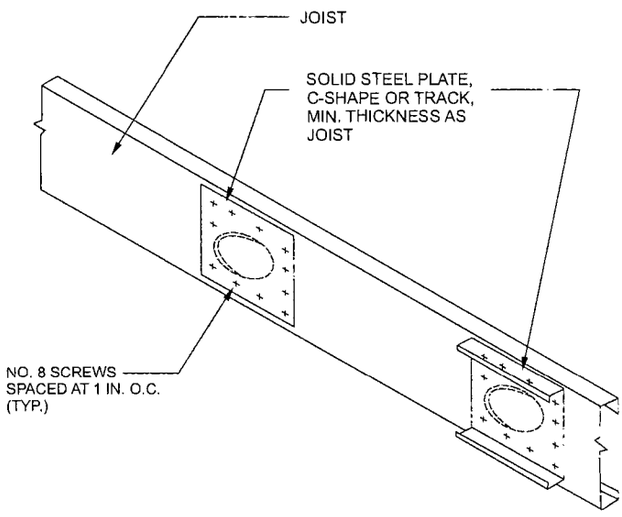

For SI: 1 inch = 25.4 mm.

FIGURE R804.2.6.3
ROOF FRAMING MEMBER WEB HOLE PATCH

R804.3 Roof construction. Cold-formed steel roof systems constructed in accordance with the provisions of this section shall consist of both ceiling joists and rafters in accordance with Figure R804.3 and fastened in accordance with Table R804.3.

R804.3.1 Ceiling joists. Cold-formed steel ceiling joists shall be in accordance with this section.

R804.3.1.1 Minimum ceiling joist size. Ceiling joist size and thickness shall be determined in accordance with the limits set forth in Tables R804.3.1.1(1) and R804.3.1.1(2). When determining the size of ceiling joists, the lateral support of the top flange shall be classified as unbraced, braced at midspan or braced at third points in accordance with Section R804.3.1.3. Where sheathing material is attached to the top flange of ceiling joists or where the bracing is spaced closer than at third points of the joists, the "third point" values from Tables R804.3.1.1(1) and R804.3.1.1(2) shall be used.

Ceiling joists shall have a bearing support length of not less than $1^1/_2$ inches (38 mm) and shall be connected to roof rafters (heel joint) with No. 10 screws in accordance with Figure R804.3.1.1 and Table R804.3.1.1(3).

Where continuous joists are framed across interior bearing supports, the interior bearing supports shall be located within 24 inches (610 mm) of midspan of the ceiling joist, and the individual spans shall not exceed the applicable spans in Tables R804.3.1.1(1) and R804.3.1.1(2).

Where the attic is to be used as an occupied space, the ceiling joists shall be designed in accordance with Section R505.

R804.3.1.2 Ceiling joist bottom flange bracing. The bottom flanges of ceiling joists shall be laterally braced by the application of gypsum board or continuous steel straps installed perpendicular to the joist run in accordance with one of the following:

1. Gypsum board shall be fastened with No. 6 screws in accordance with Section R702.
2. Steel straps with a minimum size of $1^1/_2$ inches by 33 mils (38 mm by 0.84 mm) shall be installed at a maximum spacing of 4 feet (1219 mm). Straps shall be fastened to the bottom flange at each joist with one No. 8 screw and shall be fastened to blocking with two No. 8 screws. Blocking shall be installed between joists at a maximum spacing of 12 feet (3658 mm) measured along a line of continuous strapping (perpendicular to the joist run), and at the termination of all straps.

R804.3.1.3 Ceiling joist top flange bracing. The top flanges of ceiling joists shall be laterally braced as required by Tables R804.3.1.1(1) and R804.3.1.1(2), in accordance with one of the following:

1. Minimum 33-mil (0.84 mm) C-shaped member in accordance with Figure R804.3.1.3(1).
2. Minimum 33-mil (0.84 mm) track section in accordance with Figure R804.3.1.3(1).
3. Minimum 33-mil (0.84 mm) hat section in accordance with Figure R804.3.1.3(1).
4. Minimum 54-mil (1.37 mm) $1^1/_2$-inch (38 mm) cold-rolled channel section in accordance with Figure R804.3.1.3(1).
5. Minimum $1^1/_2$-inch by 33-mil (38 mm by 0.84 mm) continuous steel strap in accordance with Figure R804.3.1.3(2).

Lateral bracing shall be installed perpendicular to the ceiling joists and shall be fastened to the top flange of each joist with one No. 8 screw. Blocking shall be installed between joists in line with bracing at a maximum spacing of 12 feet (3658 mm) measured perpendicular to the joists. Ends of lateral bracing shall be attached to blocking or anchored to a stable building component with two No. 8 screws.

R804.3.1.4 Ceiling joist splicing. Splices in ceiling joists shall be permitted, if ceiling joist splices are supported at interior bearing points and are constructed in accordance with Figure R804.3.1.4. The number of screws on each side of the splice shall be the same as required for the heel joint connection in Table R804.3.1.1(3).

R804.3.2 Roof rafters. Cold-formed steel roof rafters shall be in accordance with this section.

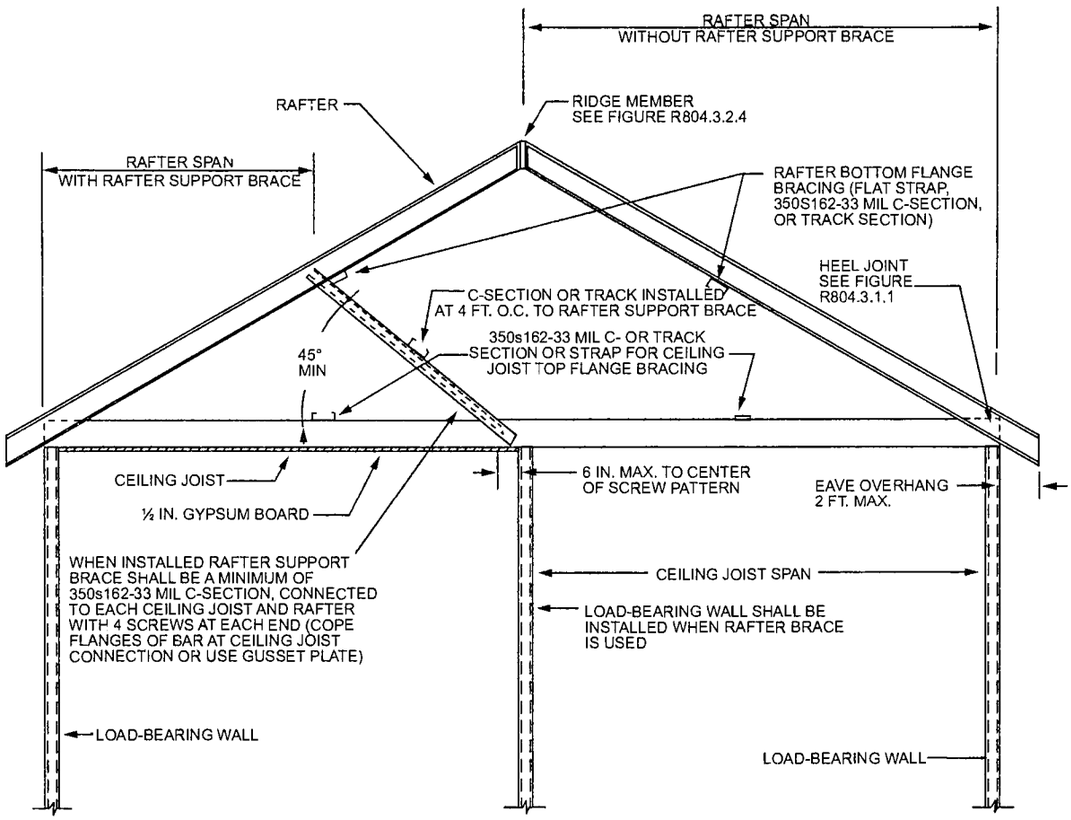

For SI: 1 inch = 25.4 mm, 1 foot = 304.8 mm, 1 mil = 0.0254 mm.

FIGURE R804.3
COLD-FORMED STEEL ROOF CONSTRUCTION

TABLE R804.3
ROOF FRAMING FASTENING SCHEDULE[a, b]

DESCRIPTION OF BUILDING ELEMENTS			NUMBER AND SIZE OF FASTENERS[a]				SPACING OF FASTENERS
Roof sheathing (oriented strand board or plywood) to rafter			No. 8 screws				6″ o.c. on edges and 12″ o.c. at interior supports. 6″ o.c. at gable end truss
Gable end truss to endwall top track			No. 10 screws				12″ o.c.
Rafter to ceiling joist			Minimum No. 10 screws, in accordance with Table R804.3.1.1(3)				Evenly spaced, not less than $^1/_2$″ from all edges.
Ceiling joist or roof truss to top track of bearing wall[b]	Ceiling Joist Spacing (in.)	Roof Span (ft)	Ultimate Design Wind Speed (mph) and Exposure Category				Each ceiling joist or roof truss
			126 B 110 C	<139 B 115 C	126 C	<139 C	
	16	24	2	2	2	3	
		28	2	2	3	3	
		32	2	2	3	4	
		36	2	2	3	4	
		40	2	2	3	4	
	24	24	2	2	3	4	
		28	2	2	4	5	
		32	2	3	4	5	
		36	2	3	4	6	
		40	2	3	5	6	

For SI: 1 inch = 25.4 mm, 1 foot = 304.8 mm, 1 pound per square foot = 0.0479 kPa, 1 mil = 0.0254 mm.

a. Screws are a minimum No. 10 unless noted otherwise.

b. Indicated number of screws shall be applied through the flanges of the truss or ceiling joist or through each leg of a 54 mil clip angle. See Section R804.3.8 for additional requirements to resist uplift forces.

TABLE R804.3.1.1(1)
CEILING JOIST SPANS
10 PSF LIVE LOAD (NO ATTIC STORAGE)[a, b, c, d]

MEMBER DESIGNATION	ALLOWABLE SPAN (feet - inches)					
	Lateral Support of Top (Compression) Flange					
	Unbraced		Midspan Bracing		Third-point Bracing	
	Ceiling Joist Spacing (inches)					
	16	24	16	24	16	24
350S162-33	9′-6″	8′-6″	11′-10″	9′-10″	11′-10″	10′-4″
350S162-43	10′-4″	9′-3″	12′-10″	11′-3″	12′-10″	11′-3″
350S162-54	11′-1″	9′-11″	13′-9″	12′-0″	13′-9″	12′-0″
350S162-68	12′-2″	10′-10″	14′-9″	12′-10″	14′-9″	12′-10″
550S162-33	10′-11″	9′-10″	15′-7″	12′-0″	16′-10″	12′-0″
550S162-43	11′-8″	10′-6″	16′-10″	14′-10″	18′-4″	16′-0″
550S162-54	12′-7″	11′-3″	18′-0″	16′-2″	19′-4″	17′-2″
550S162-68	13′-7″	12′-1″	19′-3″	17′-3″	20′-6″	18′-5″
800S162-33	—	—	—	—	—	—
800S162-43	13′-1″	11′-9″	18′-9″	16′-9″	21′-2″	18′-7″
800S162-54	13′-11″	12′-6″	20′-1″	18′-1″	21′-5″	20′-5″
800S162-68	14′-11″	13′-4″	21′-4″	19′-2″	22′-9″	21′-9″
1000S162-43	—	—	—	—	—	—
1000S162-54	14′-10″	13′-4″	21′-4″	19′-2″	22′-8″	21′-8″
1000S162-68	15′-10″	14′-3″	22′-9″	20′-5″	24′-3″	23′-3″
1200S162-43	—	—	—	—	—	—
1200S162-54	—	—	—	—	—	—
1200S162-68	16′-8″	14′-11″	23′-11″	21′-7″	25′-5″	24′-5″

For SI: 1 inch = 25.4 mm, 1 foot = 304.8 mm, 1 mil = 0.0254 mm, 1 pound per square foot = 0.0479 kPa.

a. Deflection criterion: *L*/240 for total loads.

b. Ceiling dead load = 5 psf.

c. Minimum Grade 33 ksi steel shall be used for 33 mil and 43 mil thicknesses. Minimum Grade 50 ksi steel shall be used for 54 and 68 mil thicknesses.

d. Listed allowable spans are not applicable for 350S162-33, 550S162-33, 550S162-43 and 800S162-43 continuous joist members.

TABLE R804.3.1.1(2)
CEILING JOIST SPANS
20 PSF LIVE LOAD (LIMITED ATTIC STORAGE)[a, b, c, d]

MEMBER DESIGNATION	ALLOWABLE SPAN (feet - inches)					
	Lateral Support of Top (Compression) Flange					
	Unbraced		Midspan Bracing		Third-point Bracing	
	Ceiling Joist Spacing (inches)					
	16	24	16	24	16	24
350S162-33	8′-0″	6′-5″	9′-2″	7′-5″	9′-11″	7′-5″
350S162-43	8′-11″	7′-8″	10′-9″	8′-9″	10′-0″	9′-6″
350S162-54	9′-7″	8′-7″	11′-7″	10′-2″	11′-7″	10′-2″
350S162-68	10′-4″	9′-3″	12′-5″	10′-10″	12′-5″	10′-10″
550S162-33	9′-5″	6′-11″	10′-5″	6′-11″	10′-5″	6′-11″
550S162-43	10′-2″	9′-2″	14′-2″	11′-8″	15′-2″	11′-8″
550S162-54	10′-10″	9′-9″	15′-7″	14′-0″	16′-7″	14′-5″
550S162-68	11′-8″	10′-5″	16′-7″	14′-10″	17′-9″	15′-6″
800S162-33	—	—	—	—	—	—
800S162-43	11′-4″	10′-2″	16′-1″	11′-0″	16′-6″	11′-0″
800S162-54	12′-0″	10′-10″	17′-4″	15′-7″	18′-7″	17′-7″
800S162-68	12′-10″	11′-6″	18′-6″	16′-7″	19′-11″	18′-11″
1000S162-43	—	—	—	—	—	—
1000S162-54	12′-10″	11′-7″	18′-5″	16′-6″	19′-8″	18′-8″
1000S162-68	13′-8″	12′-3″	19′-8″	17′-9″	21′-1″	20′-1″
1200S162-43	—	—	—	—	—	—
1200S162-54	—	—	—	—	—	—
1200S162-68	14′-5″	12′-11″	20′-9″	18′-7″	22′-0″	21′-0″

For SI: 1 inch = 25.4 mm, 1 foot = 304.8 mm, 1 mil = 0.0254 mm, 1 pound per square foot = 0.0479 kPa.

a. Deflection criterion: L/240 for total loads.

b. Ceiling deal load = 5 psf.

c. Minimum Grade 33 ksi steel shall be used for 33 mil and 43 mil thicknesses. Minimum Grade 50 ksi steel shall be used for 54 and 68 mil thicknesses.

d. Listed allowable spans are not applicable for 350S162-33, 350S162-43, 550S162-33, 550S162-43 and 800S162-43 continuous joist members.

TABLE R804.3.1.1(3)
NUMBER OF SCREWS REQUIRED FOR CEILING JOIST TO ROOF RAFTER CONNECTION[a]

ROOF SLOPE	NUMBER OF SCREWS																			
	Building width (feet)																			
	24				28				32				36				40			
	Ground snow load (psf)																			
	20	30	50	70	20	30	50	70	20	30	50	70	20	30	50	70	20	30	50	70
3/12	5	6	9	11	5	7	10	13	6	8	11	15	7	8	13	17	8	9	14	19
4/12	4	5	7	9	4	5	8	10	5	6	9	12	5	7	10	13	6	7	11	14
5/12	3	4	6	7	4	4	6	8	4	5	7	10	5	5	8	11	5	6	9	12
6/12	3	3	5	6	3	4	6	7	4	4	6	8	4	5	7	9	4	5	8	10
7/12	3	3	4	6	3	3	5	7	3	4	6	7	4	4	6	8	4	5	7	9
8/12	2	3	4	5	3	3	5	6	3	4	5	7	3	4	6	8	4	4	6	8
9/12	2	3	4	5	3	3	4	6	3	3	5	6	3	4	5	7	3	4	6	8
10/12	2	2	4	5	2	3	4	5	3	3	5	6	3	3	5	7	3	4	6	7
11/12	2	2	3	4	2	3	4	5	3	3	4	6	3	3	5	6	3	4	5	7
12/12	2	2	3	4	2	3	4	5	2	3	4	5	3	3	5	6	3	4	5	7

For SI: 1 inch = 25.4 mm, 1 foot = 304.8 mm, 1 pound per square foot = 0.0479kPa.

a. Screws shall be No. 10.

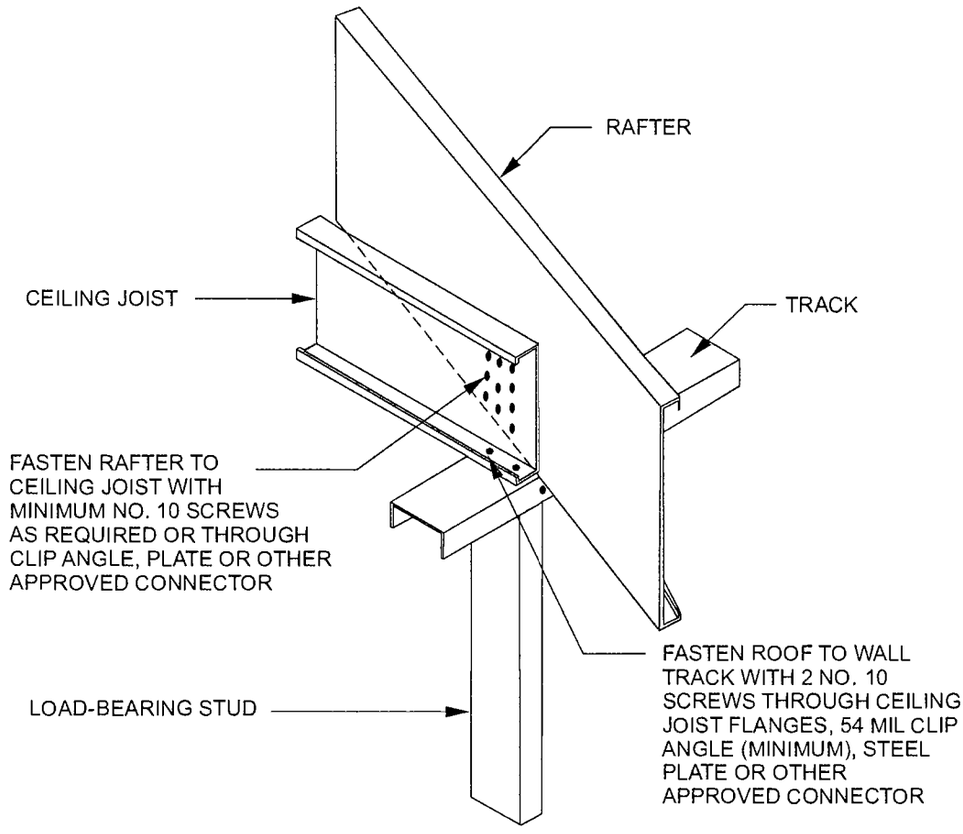

For SI: 1 mil = 0.0254 mm.

FIGURE R804.3.1.1
JOIST TO RAFTER CONNECTION

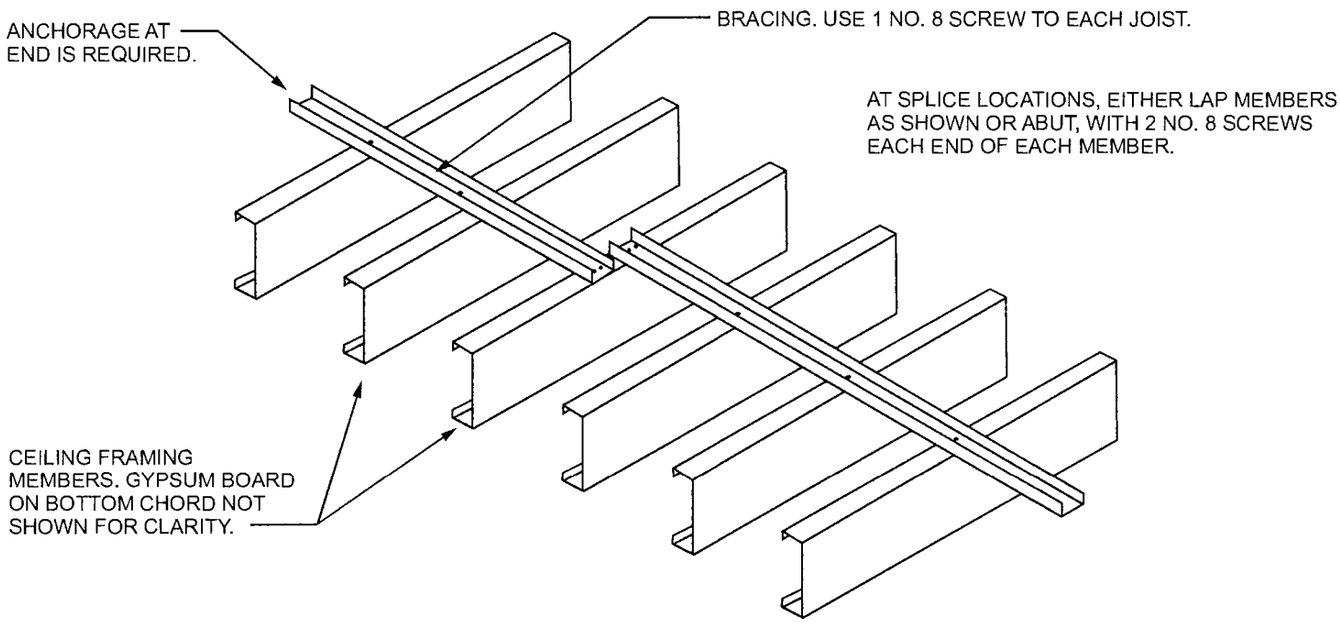

FIGURE R804.3.1.3(1)
CEILING JOIST TOP FLANGE BRACING WITH C-SHAPED, TRACK OR COLD-ROLLED CHANNEL

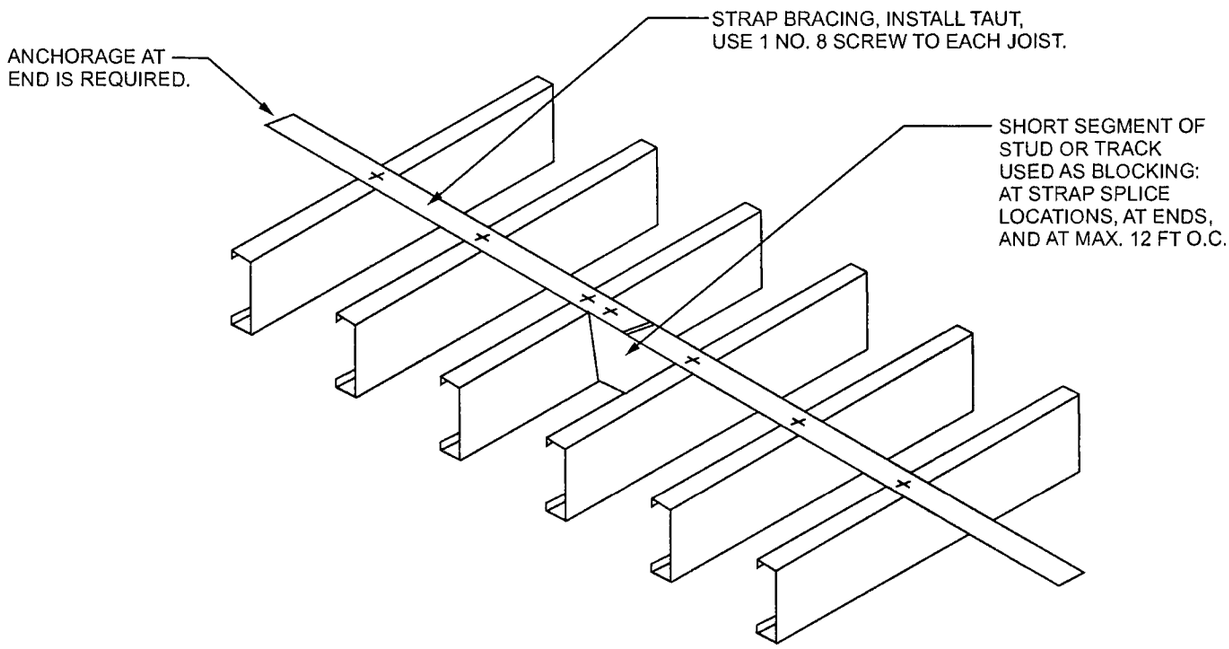

For SI: 1 foot = 304.8 mm.

FIGURE R804.3.1.3(2)
CEILING JOIST TOP FLANGE BRACING WITH CONTINUOUS STEEL STRAP AND BLOCKING

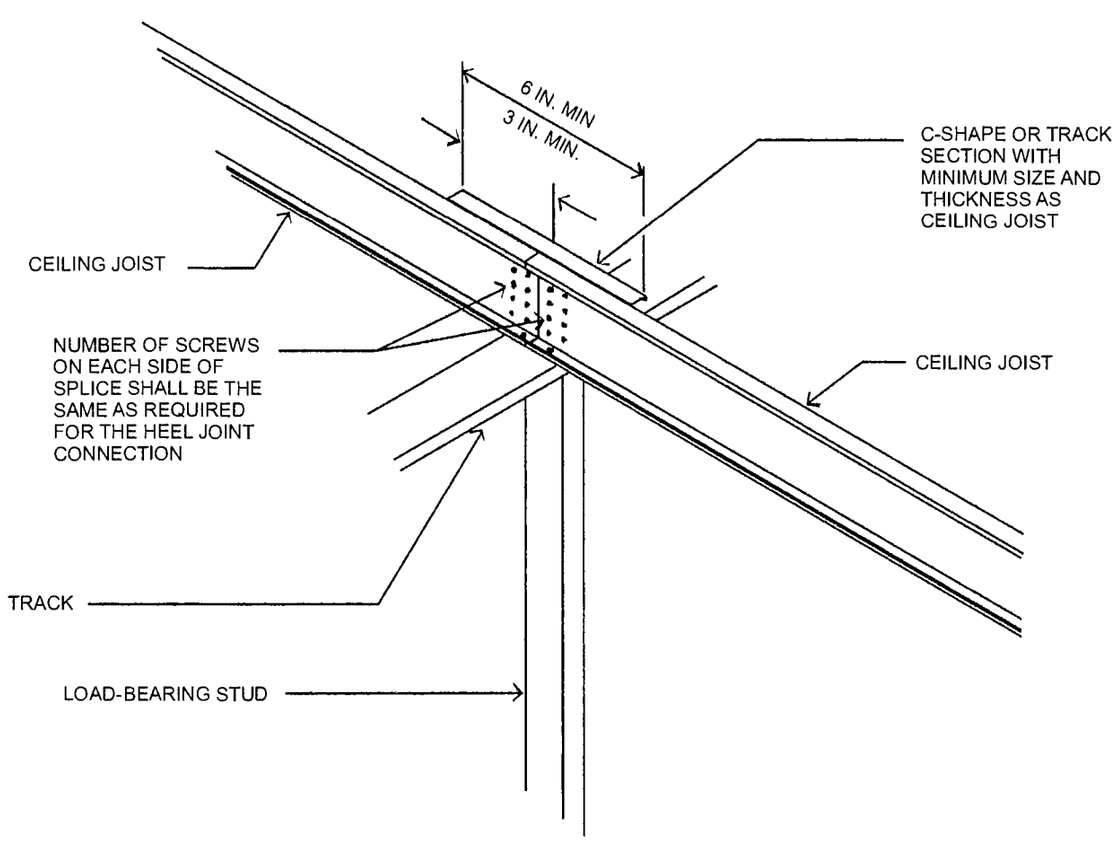

For SI: 1 inch = 25.4 mm.

FIGURE R804.3.1.4
SPLICED CEILING JOISTS

R804.3.2.1 Minimum roof rafter sizes. Roof rafter size and thickness shall be determined in accordance with the limits set forth in Table R804.3.2.1(1) based on the horizontal projection of the roof rafter span. For determination of roof rafter sizes, reduction of roof spans shall be permitted where a roof rafter support brace is installed in accordance with Section R804.3.2.2. The reduced roof rafter span shall be taken as the larger of the distances from the roof rafter support brace to the ridge or to the heel measured horizontally.

For the purpose of determining roof rafter sizes in Table R804.3.2.1(1), ultimate design wind speeds shall be converted to equivalent ground snow loads in accordance with Table R804.3.2.1(2). Roof rafter sizes shall be based on the higher of the ground snow load or the equivalent snow load converted from the ultimate design wind speed.

R804.3.2.1.1 Eave overhang. Eave overhangs shall not exceed 24 inches (610 mm) measured horizontally.

R804.3.2.1.2 Rake overhangs. Rake overhangs shall not exceed 12 inches (305 mm) measured horizontally. Outlookers at gable endwalls shall be installed in accordance with Figure R804.3.2.1.2.

R804.3.2.2 Roof rafter support brace. Where used to reduce roof rafter spans in determining roof rafter sizes, a roof rafter support brace shall meet all of the following conditions:

1. Minimum 350S162-33 C-shaped brace member with maximum length of 8 feet (2438 mm).
2. Minimum brace member slope of 45 degrees (0.785 rad) to the horizontal.
3. Minimum connection of brace to a roof rafter and ceiling joist with four No.10 screws at each end.
4. Maximum 6 inches (152 mm) between brace/ceiling joist connection and load-bearing wall below.
5. Each roof rafter support brace greater than 4 feet (1219 mm) in length, shall be braced with a supplemental brace having a minimum size of 350S162-33 or 350T162-33 such that the maximum unsupported length of the roof rafter support brace is 4 feet (1219 mm). The supplemental brace shall be continuous and shall be connected to each roof rafter support brace using two No. 8 screws.

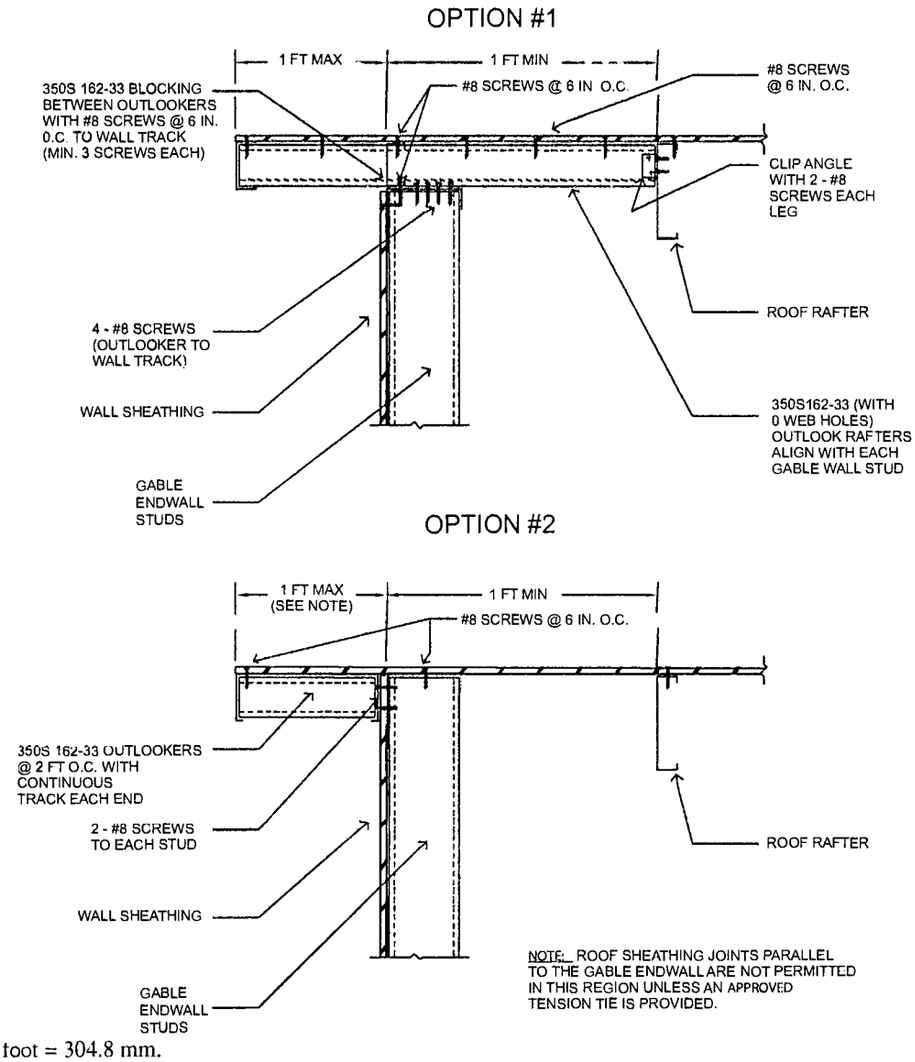

For SI: 1 inch = 25.4 mm, 1 foot = 304.8 mm.

FIGURE R804.3.2.1.2
GABLE ENDWALL OVERHANG DETAILS

TABLE R804.3.2.1(1)
ROOF RAFTER SPANS[a, b, c, d]

MEMBER DESIGNATION	ALLOWABLE SPAN MEASURED HORIZONTALLY (feet - inches)							
	Ground snow load (psf)							
	20		30		50		70	
	Rafter spacing (inches)							
	16	24	16	24	16	24	16	24
550S162-33	13′-11″	11′-4″	11′-9″	9′-7″	9′-5″	7′-8″	8′-1″	6′-7″
550S162-43	15′-9″	13′-8″	14′-3″	11′-8″	11′-4″	9′-3″	9′-9″	7′-11″
550S162-54	16′-11″	14′-10″	15′-3″	13′-4″	13′-3″	11′-7″	12′-0″	10′-6″
550S162-68	18′-2″	15′-10″	16′-5″	14′-4″	14′-3″	12′-5″	12′-11″	11′-3″
800S162-33	16′-4″	13′-4″	13′-11″	11′-4″	11′-1″	9′-0″	9′-6″	6′-7″
800S162-43	19′-7″	16′-0″	16′-8″	13′-7″	13′-4″	10′-10″	11′-5″	9′-4″
800S162-54	22′-9″	19′-11″	20′-7″	17′-11″	17′-10″	4′-9″	15′-6″	12′-7″
800S162-68	24′-7″	21′-6″	22′-2″	19′-5″	19′-3″	16′-10″	17′-5″	14′-8″
1000S162-43	22′-2″	18′-1″	18′-10″	15′-4″	15′-1″	12′-4″	12′-11″	10′-7″
1000S162-54	27′-1″	23′-8″	24′-6″	20′-9″	20′-5″	16′-8″	17′-6″	14′-3″
1000S162-68	29′-5″	25′-8″	26′-6″	23′-2″	23′-0″	19′-6″	20′-6″	16′-9″
1200S162-54	31′-3″	27′-0″	28′-1″	22′-11″	22′-6″	18′-4″	19′-4″	15′-9″
1200S162-68	34′-0″	29′-8″	30′-8″	26′-9″	26′-6″	21′-7″	22′-8″	18′-6″

For SI: 1 inch = 25.4 mm, 1 foot = 304.8 mm, 1 pound per square foot = 0.0479 kPa.

a. Table provides maximum horizontal rafter spans in feet and inches for slopes between 3:12 and 12:12.

b. Deflection criteria: L/240 for live loads and L/180 for total loads.

c. Roof dead load = 12 psf.

d. Grade 33 ksi steel is permitted to be used for 33 mil and 43 mil thicknesses. Grade 50 ksi steel shall be used for 54 and 68 mil thicknesses.

TABLE R804.3.2.1(2)
ULTIMATE DESIGN WIND SPEED TO EQUIVALENT SNOW LOAD CONVERSION

ULTIMATE WIND SPEED AND EXPOSURE		EQUIVALENT GROUND SNOW LOAD (psf)									
		Roof slope									
Exposure	Wind speed (mph)	3:12	4:12	5:12	6:12	7:12	8:12	9:12	10:12	11:12	12:12
B	115	20	20	20	20	30	20	30	30	30	50
	120	20	20	20	20	30	30	30	30	30	50
	130	20	20	20	20	30	30	30	50	50	50
	<140	20	20	20	20	30	50	50	50	50	50
C	115	20	20	20	20	30	30	30	50	50	50
	120	20	20	20	20	30	30	50	50	50	50
	130	20	20	20	30	30	50	50	50	50	70
	<140	30	30	30	50	50	50	70	70	70	—

For SI: 1 mile per hour = 0.447 m/s, 1 pound per square foot = 0.0479 kPa.

R804.3.2.3 Roof rafter splice. Roof rafters shall not be spliced.

R804.3.2.4 Roof rafter to ceiling joist and ridge member connection. Roof rafters shall be connected to a parallel ceiling joist to form a continuous tie between exterior walls in accordance with Figure R804.3.1.1 and Table R804.3.1.1(3). Ceiling joists shall be connected to the top track of the load-bearing wall in accordance with Table R804.3, either with the required number of No. 10 screws applied through the flange of the ceiling joist or by using a 54-mil (1.37 mm) clip angle with the required number of No.10 screws in each leg. Roof rafters shall be connected to a ridge member with a minimum 2-inch by 2-inch (51 mm by 51 mm) clip angle fastened with No. 10 screws to the ridge member in accordance with Figure R804.3.2.4 and Table R804.3.2.4. The clip angle shall have a steel thickness equivalent to or greater than the roof rafter thickness and shall extend the depth of the roof rafter member to the extent possible. The ridge member shall be fabricated from a C-shaped member and a track section that shall have a minimum size and steel thickness equivalent to or greater than that of adjacent roof rafters and shall be installed in accordance with Figure R804.3.2.4. The ridge member shall extend the full depth of the sloped roof rafter cut.

R804.3.2.5 Roof rafter bottom flange bracing. The bottom flanges of roof rafters shall be continuously braced, at a maximum spacing of 8 feet (2440 mm) as measured parallel to the roof rafters, with one of the following members:

1. Minimum 33-mil (0.84 mm) C-shaped member.
2. Minimum 33-mil (0.84 mm) track section.
3. Minimum $1^1/_2$-inch by 33-mil (38 mm by 0.84 mm) steel strap.

The bracing element shall be fastened to the bottom flange of each roof rafter with one No. 8 screw and shall be fastened to blocking with two No. 8 screws. Blocking shall be installed between roof rafters in-line with the continuous bracing at a maximum spacing of 12 feet (3658 mm) measured perpendicular to the roof rafters. The ends of continuous bracing shall be fastened to blocking or anchored to a stable building component with two No. 8 screws.

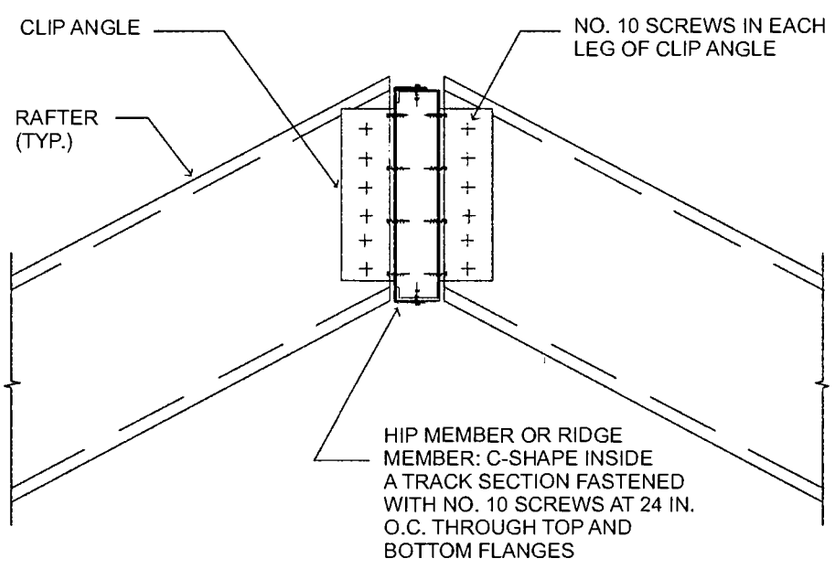

For SI: 1 inch = 25.4 mm.

FIGURE R804.3.2.4
RIDGE MEMBER CONNECTION

TABLE R804.3.2.4
SCREWS REQUIRED AT EACH LEG OF CLIP ANGLE FOR ROOF RAFTER TO RIDGE MEMBER CONNECTION[a]

BUILDING WIDTH (feet)	NUMBER OF SCREWS			
	Ground snow load (psf)			
	0 to 20	21 to 30	31 to 50	51 to 70
24	2	2	3	4
28	2	3	4	5
32	2	3	4	5
36	3	3	5	6
40	3	4	5	7

For SI: 1 inch = 25.4 mm, 1 foot = 304.8 mm, 1 pound per square foot = 0.0479 kPa.
a. Screws shall be No. 10 minimum.

R804.3.3 Cutting and notching. Flanges and lips of load-bearing, cold-formed steel roof framing members shall not be cut or notched.

R804.3.4 Headers. Roof-ceiling framing above wall openings shall be supported on headers. The allowable spans for headers in load-bearing walls shall not exceed the values set forth in Section R603.6 and Tables R603.6(1) through R603.6(6).

R804.3.5 Framing of openings in roofs and ceilings. Openings in roofs and ceilings shall be framed with header and trimmer joists. Header joist spans shall not exceed 4 feet (1219 mm) in length. Header and trimmer joists shall be fabricated from joist and track members having a minimum size and thickness equivalent to the adjacent ceiling joists or roof rafters and shall be installed in accordance with Figures R804.3.5(1) and R804.3.5(2). Each header joist shall be connected to trimmer joists with not less than four 2-inch by 2-inch (51 by 51 mm) clip angles. Each clip angle shall be fastened to both the header and trimmer joists with four No. 8 screws, evenly spaced, through each leg of the clip angle. The steel thickness of the clip angles shall be not less than that of the ceiling joist or roof rafter. Each track section for a built-up header or trimmer joist shall extend the full length of the joist (continuous).

R804.3.6 Roof trusses. Cold-formed steel trusses shall be designed and installed in accordance with AISI S240. In the absence of specific bracing requirements, trusses shall be braced in accordance with accepted industry practices, such as the SBCA *Cold-Formed Steel Building Component Safety Information (CFSBCSI) Guide to Good Practice for Handling, Installing & Bracing of Cold-Formed Steel Trusses*. Trusses shall be connected to the top track of the load-bearing wall in accordance with Table R804.3, either with two No. 10 screws applied through the flange of the truss or by using a 54-mil (1.37 mm) clip angle with two No. 10 screws in each leg.

R804.3.7 Ceiling and roof diaphragms. Ceiling and roof diaphragms shall be in accordance with this section.

R804.3.7.1 Ceiling diaphragms. At gable endwalls a ceiling diaphragm shall be provided by attaching a minimum $^1/_2$-inch (12.7 mm) gypsum board or a minimum $^3/_8$-inch (9.5 mm) wood structural panel sheathing, that complies with Section R803, to the bottom of ceiling joists or roof trusses and connected to wall framing in accordance with Figures R804.3.7.1(1) and R804.3.7.1(2), unless studs are designed as full height without bracing at the ceiling. Flat blocking shall consist of C-shaped or track section with a minimum thickness of 33 mils (0.84 mm). For a gypsum board sheathed ceiling, the diaphragm length shall be in accordance with Table R804.3.7.1. For a wood structural panel sheathed ceiling, the diaphragm length shall be not less than 12 feet (3658 mm) for building widths less than 36 feet (10 973 mm), or not less than 14 feet (4267 mm) for building widths greater than or equal to 36 feet (10 973 mm).

The ceiling diaphragm shall be secured with screws spaced at a maximum 6 inches (152 mm) o.c. at panel edges and a maximum 12 inches (305 mm) o.c. in the field. The required lengths in Table R804.3.7.1 for gypsum board sheathed ceiling diaphragms shall be permitted to be multiplied by 0.35 if all panel edges are blocked. Multiplying the required lengths in Table R804.3.7.1 for gypsum board sheathed ceiling diaphragms by 0.9 shall be permitted if all panel edges are secured with screws spaced at 4 inches (102 mm) o.c.

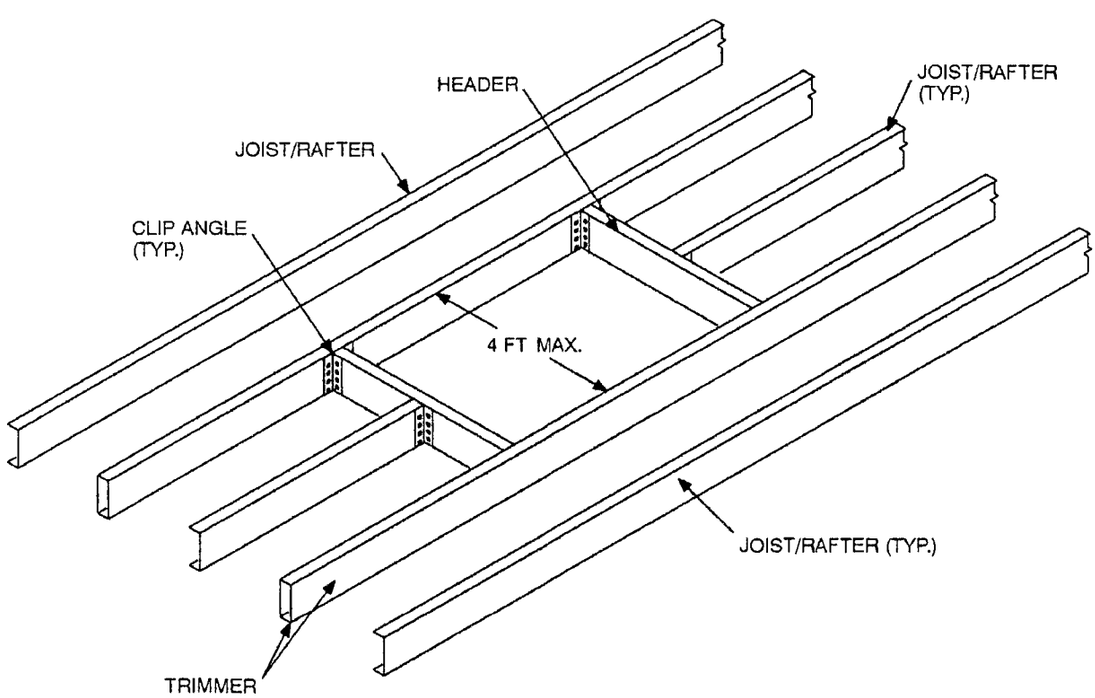

For SI: 1 foot = 304.8 mm.

FIGURE R804.3.5(1)
ROOF OR CEILING OPENING

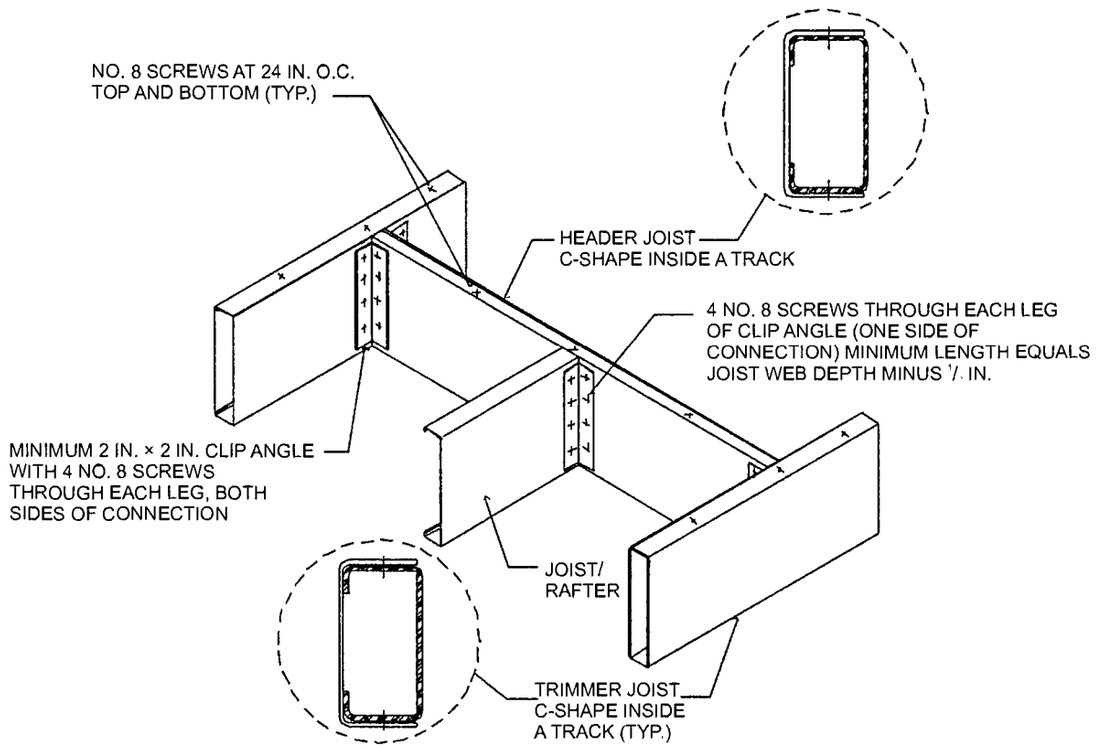

For SI: 1 inch = 25.4 mm.

FIGURE R804.3.5(2)
HEADER TO TRIMMER CONNECTION

TABLE R804.3.7.1
REQUIRED LENGTHS FOR CEILING DIAPHRAGMS AT GABLE ENDWALLS GYPSUM BOARD SHEATHED, CEILING HEIGHT = 8 FEET[a, b, c, d, e, f, g]

EXPOSURE CATEGORY		ULTIMATE DESIGN WIND SPEED (mph)					
B		115	120	130	< 140	—	—
C		—	—	115	120	130	< 140
Roof pitch	Building endwall width (feet)	Minimum diaphragm length (feet)					
3:12 to 6:12	24 - 28	16	18	24	26	30	34
	> 28 - 32	20	20	26	32	34	40
	> 32 - 36	24	26	30	36	42	46
	> 36 - 40	26	28	36	40	48	52
6:12 to 9:12	> 24 - 28	20	20	26	30	34	38
	> 28 - 32	24	26	30	36	42	46
	> 32 - 36	26	30	38	42	48	54
	> 36 - 40	30	34	40	50	56	62
9:12 to 12:12	> 24 - 28	22	24	30	34	38	44
	> 28 - 32	26	28	36	40	46	52
	> 32 - 36	30	32	40	48	54	62
	> 36 - 40	36	38	48	56	64	72

For SI: 1 inch = 25.4 mm, 1 pound per square foot = 0.0479 kPa, 1 mile per hour = 0.447 m/s, 1 foot = 304.8 mm, 1 mil = 0.0254 mm.

a. Ceiling diaphragm is composed of $^1/_2$-inch gypsum board (min. thickness) secured with screws spaced at 6 inches o.c. at panel edges and 12 inches o.c. infield. Use No. 8 screws (min.) where framing members have a designation thickness of 54 mils or less and No. 10 screws (min.) where framing members have a designation thickness greater than 54 mils.

b. Maximum aspect ratio (length/width) of diaphragms is 2:1.

c. Building width is in the direction of horizontal framing members supported by the wall studs.

d. Required diaphragm lengths are to be provided at each end of the structure.

e. Multiplying required diaphragm lengths by 0.35 is permitted if all panel edges are blocked.

f. Multiplying required diaphragm lengths by 0.9 is permitted if all panel edges are secured with screws spaced at 4 inches o.c.

g. To determine the minimum diaphragm length for buildings with ceiling heights of 9 feet or 10 feet values in this table shall be multiplied by 1.15.

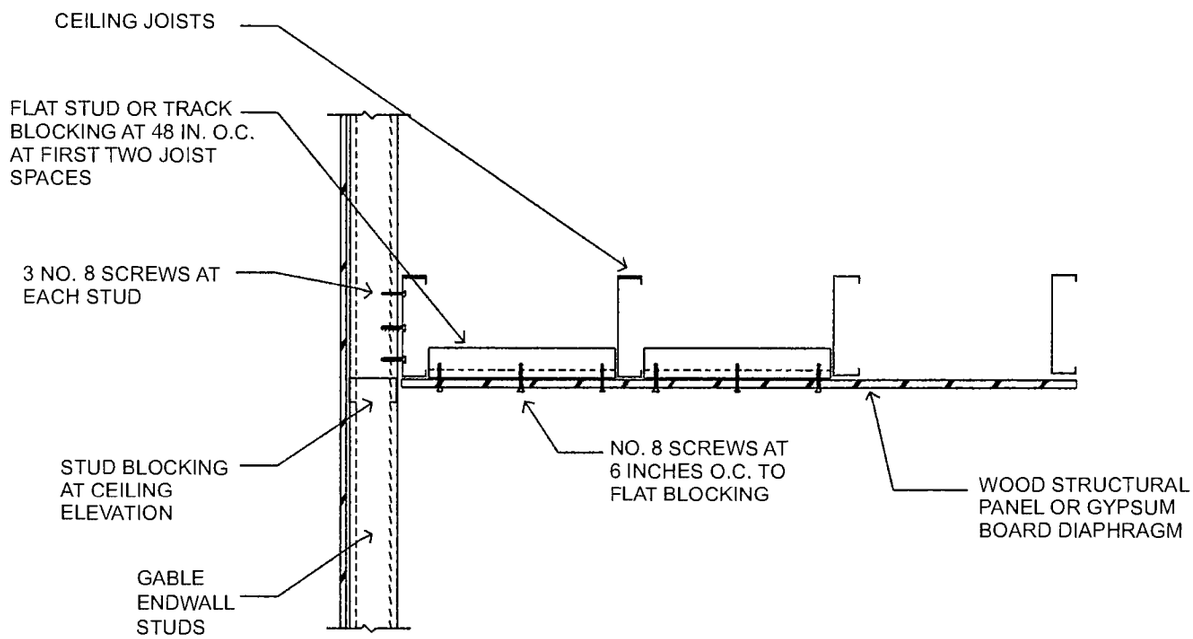

For SI: 1 inch = 25.4 mm.

FIGURE R804.3.7.1(1)
CEILING DIAPHRAGM TO GABLE ENDWALL DETAIL

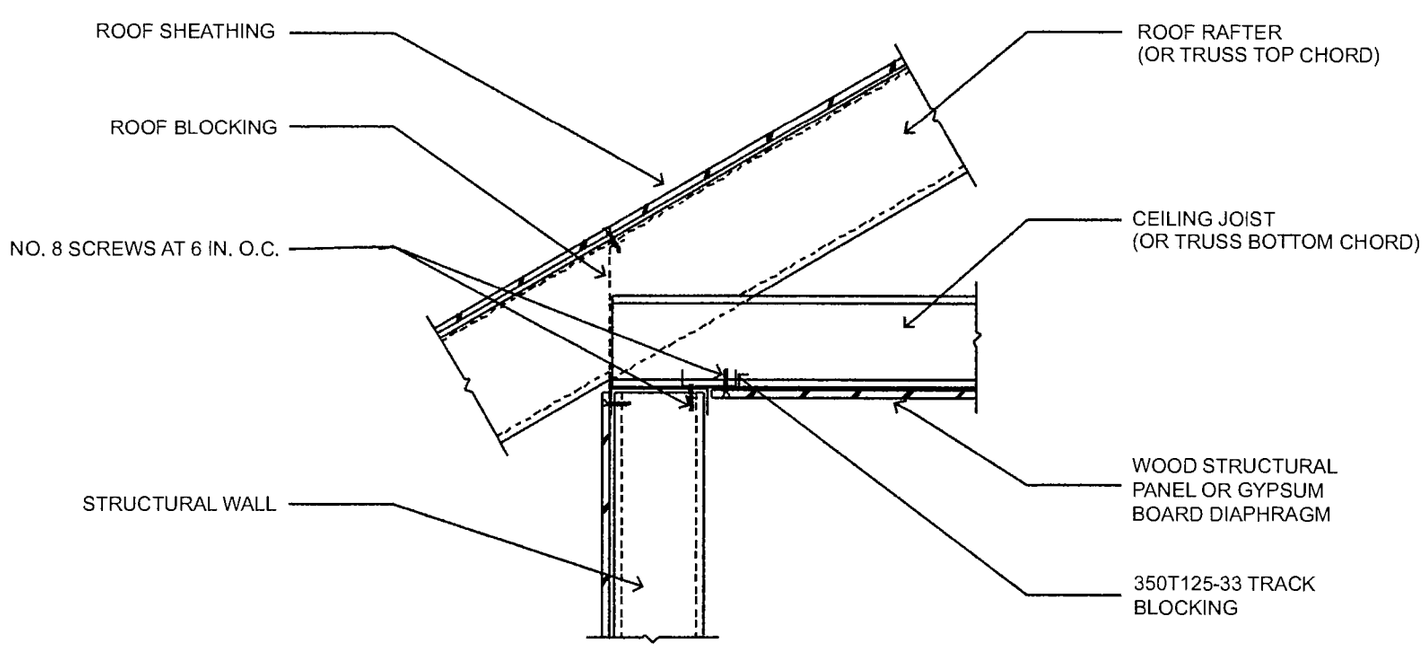

For SI: 1 inch = 25.4 mm.

FIGURE R804.3.7.1(2)
CEILING DIAPHRAGM TO SIDEWALL DETAIL

R804.3.7.2 Roof diaphragm. A roof diaphragm shall be provided by attaching not less than $^3/_8$-inch (9.5 mm) wood structural panel that complies with Section R803 to roof rafters or truss top chords in accordance with Table R804.3. Buildings with 3:1 or larger plan aspect ratio and with roof rafter slope (pitch) of 9:12 or larger shall have the roof rafters and ceiling joists blocked in accordance with Figure R804.3.7.2.

R804.3.8 Roof tie-down. Roof assemblies shall be connected to walls below in accordance with Table R804.3. A continuous load path shall be provided to transfer uplift loads to the foundation.

SECTION R805
CEILING FINISHES

R805.1 Ceiling installation. Ceilings shall be installed in accordance with the requirements for interior wall finishes as provided in Section R702.

SECTION R806
ROOF VENTILATION

R806.1 Ventilation required. Enclosed attics and enclosed rafter spaces formed where ceilings are applied directly to the underside of roof rafters shall have cross ventilation for each separate space by ventilating openings protected against the entrance of rain or snow. Ventilation openings shall have a least dimension of $^1/_{16}$ inch (1.6 mm) minimum and $^1/_4$ inch (6.4 mm) maximum. Ventilation openings having a least dimension larger than $^1/_4$ inch (6.4 mm) shall be provided with corrosion-resistant wire cloth screening, hardware cloth, perforated vinyl or similar material with openings having a least dimension of $^1/_{16}$ inch (1.6 mm) minimum and $^1/_4$ inch (6.4 mm) maximum. Openings in roof framing members shall conform to the requirements of Section R802.7. Required ventilation openings shall open directly to the outside air and shall be protected to prevent the entry of birds, rodents, snakes and other similar creatures.

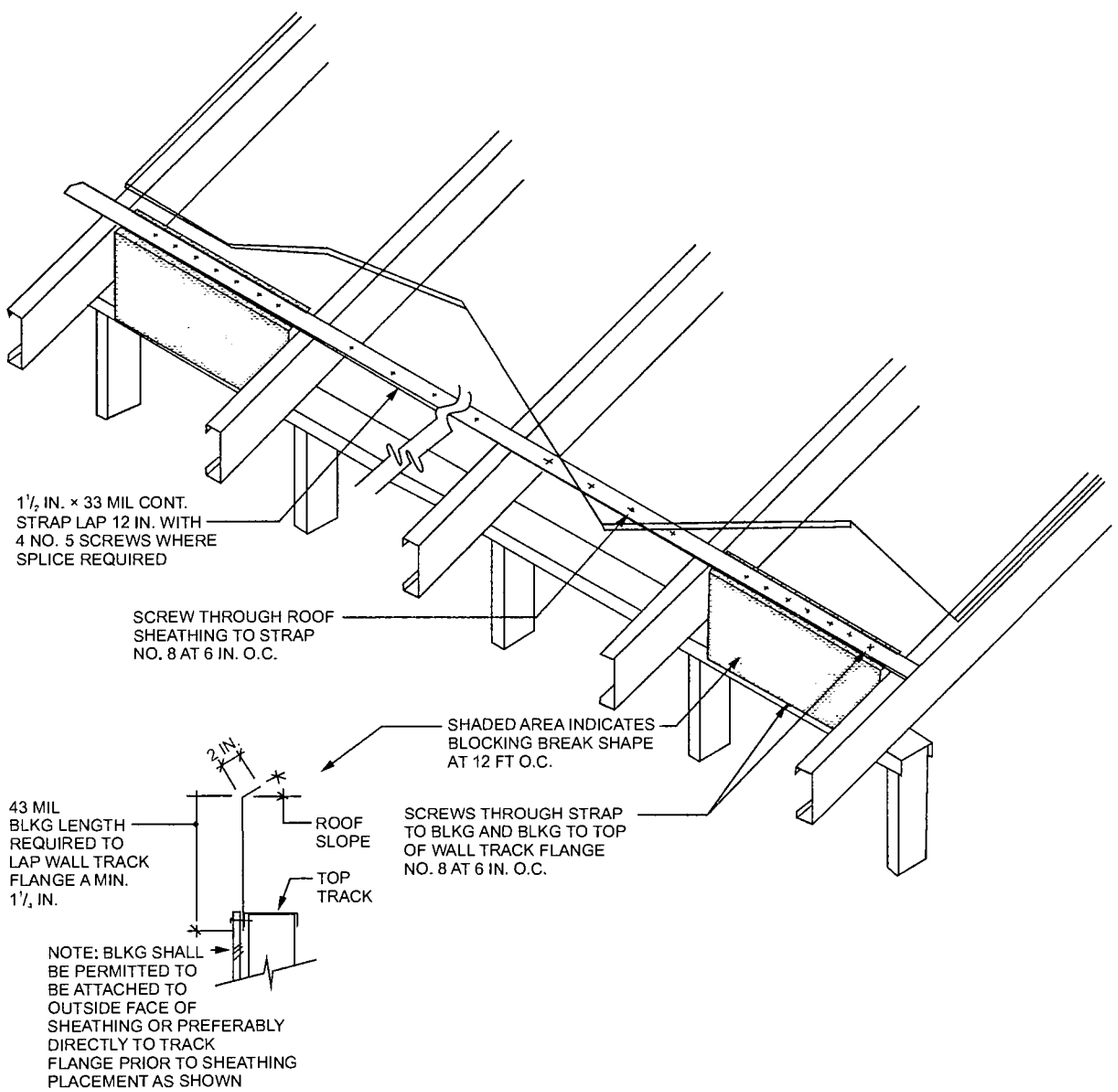

For SI: 1 mil = 0.0254 mm, 1 inch = 25.4 mm.

FIGURE R804.3.7.2
ROOF BLOCKING DETAIL

R806.2 Minimum vent area. The minimum net free ventilating area shall be $^1/_{150}$ of the area of the vented space.

Exception: The minimum net free ventilation area shall be $^1/_{300}$ of the vented space provided both of the following conditions are met:

1. In Climate Zones *14 and 16*, a Class I or II vapor retarder is installed on the warm-in-winter side of the ceiling.
2. Not less than 40 percent and not more than 50 percent of the required ventilating area is provided by ventilators located in the upper portion of the attic or rafter space. Upper ventilators shall be located not more than 3 feet (914 mm) below the ridge or highest point of the space, measured vertically. The balance of the required ventilation provided shall be located in the bottom one-third of the attic space. Where the location of wall or roof framing members conflicts with the installation of upper ventilators, installation more than 3 feet (914 mm) below the ridge or highest point of the space shall be permitted.

R806.3 Vent and insulation clearance. Where eave or cornice vents are installed, blocking, bridging and insulation shall not block the free flow of air. Not less than a 1-inch (25 mm) space shall be provided between the insulation and the roof sheathing and at the location of the vent.

R806.4 Installation and weather protection. Ventilators shall be installed in accordance with manufacturer's instructions. Installation of ventilators in roof systems shall be in accordance with the requirements of Section R903. Installation of ventilators in wall systems shall be in accordance with the requirements of Section R703.1.

R806.5 Unvented attic and unvented enclosed rafter assemblies. Unvented attics and unvented enclosed roof framing assemblies created by ceilings that are applied directly to the underside of the roof framing members and structural roof sheathing applied directly to the top of the roof framing members/rafters, shall be permitted where all the following conditions are met:

1. The unvented attic space is completely within the building thermal envelope.
2. Interior Class I vapor retarders are not installed on the ceiling side (attic floor) of the unvented attic assembly or on the ceiling side of the unvented enclosed roof framing assembly.
3. Where wood shingles or shakes are used, a minimum $^1/_4$-inch (6.4 mm) vented airspace separates the shingles or shakes and the roofing underlayment above the structural sheathing.
4. In *California Climate Zones 14 and 16*, any air-impermeable insulation shall be a Class II vapor retarder, or shall have a Class II vapor retarder coating or covering in direct contact with the underside of the insulation.

   4.1. A Class I or Class II vapor retarder shall be installed on the indirectly conditioned space side of all insulation in an unvented attic with air-permeable insulation, for condensation control.

   See the California Energy Code, Figure 100.1-A —California Climate Zones.

5. Insulation shall comply with Item 5.3 and either Item 5.1 or 5.2:

   5.1. Item 5.1.1, 5.1.2, 5.1.3 or 5.1.4 shall be met, depending on the air permeability of the insulation directly under the structural roof sheathing. *No insulation shall be required when roof tiles, wood shingles or wood shakes, or any other roofing system using battens and no continuous underlayment is installed. A continuous underlayment shall be considered to exist if sheathing, roofing paper or any continuous layer having a perm rate of no more than one perm under the dry cup method is present.*

   5.1.1. Where only air-impermeable insulation is provided, it shall be applied in direct contact with the underside of the structural roof sheathing.

   5.1.2. Where air-permeable insulation is installed directly below the structural sheathing, rigid board or sheet insulation shall be installed directly above the structural roof sheathing in accordance with the R-values in Table R806.5 for condensation control.

   5.1.3. Where both air-impermeable and air-permeable insulation are provided, the air-impermeable insulation shall be applied in direct contact with the underside of the structural roof sheathing in accordance with Item 5.1.1 and shall be in accordance with the R-values in Table R806.5 for condensation control. The air-permeable insulation shall be installed directly under the air-impermeable insulation.

   5.1.4. Alternatively, sufficient rigid board or sheet insulation shall be installed directly above the structural roof sheathing to maintain the monthly average temperature of the underside of the structural roof sheathing above 45°F (7°C). For calculation purposes, an interior air temperature of 68°F (20°C) is assumed and the exterior air temperature is assumed to be the monthly average outside air temperature of the three coldest months.

   5.2. In Climate Zones *3-15*, air-permeable insulation installed in unvented attics shall meet the following requirements:

   5.2.1. An approved vapor diffusion port shall be installed not more than 12 inches (305 mm) from the highest point of the

roof, measured vertically from the highest point of the roof to the lower edge of the port.

5.2.2. The port area shall be greater than or equal to 1:600 of the ceiling area. Where there are multiple ports in the attic, the sum of the port areas shall be greater than or equal to the area requirement.

5.2.3. The vapor-permeable membrane in the vapor diffusion port shall have a vapor permeance rating of greater than or equal to 20 perms when tested in accordance with Procedure A of ASTM E96.

5.2.4. The vapor diffusion port shall serve as an air barrier between the attic and the exterior of the building.

5.2.5. The vapor diffusion port shall protect the attic against the entrance of rain and snow.

5.2.6. Framing members and blocking shall not block the free flow of water vapor to the port. Not less than a 2-inch (51 mm) space shall be provided between any blocking and the roof sheathing. Air-permeable insulation shall be permitted within that space.

5.2.7. The roof slope shall be greater than or equal to 3:12 (vertical/horizontal).

5.2.8. Where only air-permeable insulation is used, it shall be installed directly below the structural roof sheathing.

5.2.9. Air-impermeable insulation, if any, shall be directly above or below the structural roof sheathing and is not required to meet the R-value in Table 806.5. Where directly below the structural roof sheathing, there shall be no space between the air-impermeable insulation and air-permeable insulation.

5.2.10. The air shall be supplied at a flow rate greater than or equal to 50 CFM (23.6 L/s) per 1,000 square feet (93 m^2) of ceiling. The air shall be supplied from ductwork providing supply air to the occupiable space when the conditioning system is operating. Alternatively, the air shall be supplied by a supply fan when the conditioning system is operating.

5.3. Where preformed insulation board is used as the air-impermeable insulation layer, it shall be sealed at the perimeter of each individual sheet interior surface to form a continuous layer.

TABLE R806.5
INSULATION FOR CONDENSATION CONTROL

CLIMATE ZONE	MINIMUM RIGID BOARD *OR* AIR-IMPERMEABLE INSULATION *R*-VALUE
6-15 tile roof only	0 (none required)
3-15	R-5
1 & 2	R-10
16	R-15

SECTION R807
ATTIC ACCESS

R807.1 Attic access. Buildings with combustible ceiling or roof construction shall have an attic access opening to attic areas that have a vertical height of 30 inches (762 mm) or greater over an area of not less than 30 square feet (2.8 m^2). The vertical height shall be measured from the top of the ceiling framing members to the underside of the roof framing members.

The rough-framed opening shall be not less than 22 inches by 30 inches (559 mm by 762 mm) and shall be located in a hallway or other location with ready access. Where located in a wall, the opening shall be not less than 22 inches wide by 30 inches high (559 mm wide by 762 mm high). Where the access is located in a ceiling, minimum unobstructed headroom in the attic space shall be 30 inches (762 mm) at some point above the access measured vertically from the bottom of ceiling framing members. See *the California Mechanical Code* for access requirements where mechanical equipment is located in attics.

CALIFORNIA RESIDENTIAL CODE – MATRIX ADOPTION TABLE
CHAPTER 9 – ROOF ASSEMBLIES

(Matrix Adoption Tables are nonregulatory, intended only as an aid to the code user. See Chapter 1 for state agency authority and building applications.)

Adopting agency	BSC	BSC-CG	SFM	HCD			DSA			OSHPD						BSCC	DPH	AGR	DWR	CEC	CA	SL	SLC
				1	2	1/AC	AC	SS	SS/CC	1	1R	2	3	4	5								
Adopt entire chapter																							
Adopt entire chapter as amended (amended sections listed below)				X																			
Adopt only those sections that are listed below			X																				
Chapter / Section																							
R901.1			X																				
R902.1 - R902.4			X																				
R903.4.1				X																			
R904.1 - R904.4			X																				
R918			X																				
R905.16				X																			
R907.1				X																			

CHAPTER 9

ROOF ASSEMBLIES

User note:

About this chapter: *Chapter 9 addresses the design and construction of roof assemblies. A roof assembly includes the roof deck, substrate or thermal barrier, insulation, vapor retarder and roof covering. This chapter provides the requirement for wind resistance of roof coverings. The types of roof covering materials and installation addressed by Chapter 9 are: asphalt shingles, clay and concrete tile, metal roof shingles, mineral-surfaced roll roofing, slate and slate-type shingles, wood shakes and shingles, built-up roofs, metal roof panels, modified bitumen roofing, thermoset and thermoplastic single-ply roofing, sprayed polyurethane foam roofing, liquid applied coatings and photovoltaic shingles. Chapter 9 also provides requirements for roof drainage, flashing, above-deck thermal insulation, rooftop-mounted photovoltaic systems and recovering or replacing an existing roof covering.*

SECTION R901
GENERAL

R901.1 Scope. The provisions of this chapter shall govern the design, materials, construction and quality of roof assemblies.

SECTION R902
FIRE CLASSIFICATION

R902.1 Roofing covering materials. Roofs shall be covered with materials as set forth in Sections R904 and R905. *A minimum Class A, B or C roofing shall be installed in areas designated by this section* or where the edge of the roof is less than 3 feet (914 mm) from a lot line. Class A, B and C roofing required by this section to be listed shall be tested in accordance with UL 790 or ASTM E108.

Exceptions:

1. Class A roof assemblies include those with coverings of brick, masonry and exposed concrete roof deck.
2. Class A roof assemblies include ferrous or copper shingles or sheets, metal sheets and shingles, clay or concrete roof tile, or slate installed on noncombustible decks.
3. Class A roof assemblies include minimum 16 ounces per square foot copper sheets installed over combustible decks.
4. Class A roof assemblies include slate installed over underlayment over combustible decks.

R902.1.1 Roof coverings within very-high fire hazard severity zones. *The entire roof covering of every existing structure where more than 50 percent of the total roof area is replaced within any one-year period, the entire roof covering of every new structure, and any roof covering applied in the alteration, repair or replacement of the roof of every existing structure, shall be a fire-retardant roof covering that is at least Class A.*

Exception: *The requirements shall not apply in any jurisdiction that adopts the model ordinance approved by the State Fire Marshal pursuant to Section 51189 of the Government Code or an ordinance that substantially conforms to the model ordinance and transmits a copy to the State Fire Marshal.*

R902.1.2 Roof coverings within state responsibility areas. *The entire roof covering of every existing structure where more than 50 percent of the total roof area is replaced within any one-year period, the entire roof covering of every new structure, and any roof covering applied in the alteration, repair or replacement of the roof of every existing structure, shall be a fire-retardant roof covering that is at least Class B.*

Exception: *Areas designated as moderate fire hazard severity zones.*

R902.1.3 Roof coverings in all other areas. *The entire roof covering of every existing structure where more than 50 percent of the total roof area is replaced within any one-year period, the entire roof covering of every new structure, and any roof covering applied in the alteration, repair or replacement of the roof of every existing structure, shall be a fire-retardant roof covering that is at least Class C.*

R902.1.4 Roofing requirements a wildland-urban interface fire area. *Roofing requirements for structures located in a wildland-urban interface fire area shall also comply with Section R337.5.*

R902.2 Fire-retardant-treated shingles and shakes. Fire-retardant-treated wood shakes and shingles *are wood shakes and shingles complying with UBC Standard 15-3 or 15-4 which are impregnated by the full-cell vacuum-pressure process with fire-retardant chemicals, and which have been qualified by UBC Standard 15-2 for use on Class A, B or C roofs. Fire-retardant-treated wood shakes and shingles shall comply with ICC-ES EG107 and with the weathering requirements contained in Health and Safety Code Section 13132.7 (j). Each bundle shall bear labels from an ICBO accredited quality control agency identifying their roof-covering classification and indicating their compliance with ICC-ES EG107 and with the weathering requirements contained in Health and Safety Code Section 13132.7 (j).*

Health and Safety Code Section 13132.7 (j) No wood roof covering materials shall be sold or applied in this state unless both of the following conditions are met:

(1) The materials have been approved and listed by the State Fire Marshal as complying with the requirements of this section.

(2) *The materials have passed at least five years of the 10-year natural weathering test. The 10-year natural weathering test required by this subdivision shall be conducted in accordance with Standard 15-2 of the 1994 edition of the Uniform Building Code at a testing facility recognized by the State Fire Marshal.*

R902.3 Building-integrated photovoltaic product. Building-integrated photovoltaic products installed as the roof covering shall be tested, listed and labeled for fire classification in accordance with Section R902.1 *through R902.1.4.*

R902.4 Rooftop-mounted photovoltaic panel systems. Rooftop-mounted photovoltaic panel systems installed on or above the roof covering shall be tested, listed and identified with a fire classification in accordance with UL 1703 and UL 2703. Class A, B or C photovoltaic panel systems and modules shall be installed *areas designated by this section,* in jurisdictions designated by law as requiring their use or where the edge of the roof is less than 3 feet (914 mm) from a lot line.

SECTION R903
WEATHER PROTECTION

R903.1 General. Roof decks shall be covered with approved roof coverings secured to the building or structure in accordance with the provisions of this chapter. Roof assemblies shall be designed and installed in accordance with this code and the approved manufacturer's instructions such that the roof assembly shall serve to protect the building or structure.

R903.2 Flashing. Flashings shall be installed in a manner that prevents moisture from entering the wall and roof through joints in copings, through moisture permeable materials and at intersections with parapet walls and other penetrations through the roof plane.

R903.2.1 Locations. Flashings shall be installed at wall and roof intersections, wherever there is a change in roof slope or direction and around roof openings. A flashing shall be installed to divert the water away from where the eave of a sloped roof intersects a vertical sidewall. Where flashing is of metal, the metal shall be corrosion resistant with a thickness of not less than 0.019 inch (0.5 mm) (No. 26 galvanized sheet).

R903.2.2 Crickets and saddles. A cricket or saddle shall be installed on the ridge side of any chimney or penetration more than 30 inches (762 mm) wide as measured perpendicular to the slope. Cricket or saddle coverings shall be sheet metal or of the same material as the roof covering.

Exception: Unit skylights installed in accordance with Section R308.6 and flashed in accordance with the manufacturer's instructions shall be permitted to be installed without a cricket or saddle.

R903.3 Coping. Parapet walls shall be properly coped with noncombustible, weatherproof materials of a width not less than the thickness of the parapet wall.

R903.4 Roof drainage. Unless roofs are sloped to drain over roof edges, roof drains shall be installed at each low point of the roof.

R903.4.1 Secondary (emergency overflow) drains or scuppers. Where roof drains are required, secondary emergency overflow roof drains or scuppers shall be provided where the roof perimeter construction extends above the roof in such a manner that water will be entrapped if the primary drains allow buildup for any reason. Overflow drains having the same size as the roof drains shall be installed with the inlet flow line located 2 inches (51 mm) above the low point of the roof, or overflow scuppers having three times the size of the roof drains and having a minimum opening height of 4 inches (102 mm) shall be installed in the adjacent parapet walls with the inlet flow located 2 inches (51 mm) above the low point of the roof served. The installation and sizing of overflow drains, leaders and conductors shall comply with Sections 1106 and 1108 of the *California Plumbing Code,* as applicable. <

SECTION R904
MATERIALS

R904.1 Scope. The requirements set forth in this section shall apply to the application of roof covering materials specified herein. Roof assemblies shall be applied in accordance with this chapter and the manufacturer's installation instructions. Installation of roof assemblies shall comply with the applicable provisions of Section R905.

R904.2 Compatibility of materials. Roof assemblies shall be of materials that are compatible with each other and with the building or structure to which the materials are applied.

R904.3 Material specifications and physical characteristics. Roof covering materials shall conform to the applicable standards listed in this chapter.

R904.4 Product identification. Roof covering materials shall be delivered in packages bearing the manufacturer's identifying marks and approved testing agency labels required. Bulk shipments of materials shall be accompanied by the same information issued in the form of a certificate or on a bill of lading by the manufacturer.

SECTION R905
REQUIREMENTS FOR ROOF COVERINGS

R905.1 Roof covering application. Roof coverings shall be applied in accordance with the applicable provisions of this section and the manufacturer's installation instructions. Unless otherwise specified in this section, roof coverings shall be installed to resist the component and cladding loads specified in Table R301.2(2), adjusted for height and exposure in accordance with Table R301.2(3).

R905.1.1 Underlayment. Underlayment for asphalt shingles, clay and concrete tile, metal roof shingles, mineral-surfaced roll roofing, slate and slate-type shingles, wood shingles, wood shakes, metal roof panels and photovoltaic shingles shall conform to the applicable standards listed in this chapter. Underlayment materials required to comply with ASTM D226, D1970, D4869 and D6757 shall bear a label indicating compliance to the standard designation and, if applicable, type classification indicated in Table R905.1.1(1). Underlayment

shall be applied in accordance with Table R905.1.1(2). Underlayment shall be attached in accordance with Table R905.1.1(3).

Exceptions:

1. As an alternative, self-adhering polymer-modified bitumen underlayment complying with ASTM D1970 installed in accordance with both the underlayment manufacturer's and roof covering manufacturer's instructions for the deck material, roof ventilation configuration and climate exposure for the roof covering to be installed, shall be permitted.
2. As an alternative, a minimum 4-inch-wide (102 mm) strip of self-adhering polymer-modified bitumen membrane complying with ASTM D1970, installed in accordance with the manufacturer's installation instructions for the deck material, shall be applied over all joints in the roof decking. An approved underlayment for the applicable roof covering for maximum ultimate design wind speeds, V_{ult}, less than 140 miles per hour shall be applied over the entire roof over the 4-inch-wide (102 mm) membrane strips.
3. As an alternative, two layers of underlayment complying with ASTM D226 Type II or ASTM D4869 Type III or Type IV shall be permitted to be installed as follows in 3.1–3.4:
   - 3.1. Apply a 19-inch-wide (483 mm) strip of underlayment parallel with the eave. Starting at the eave, apply 36-inch-wide (914 mm) strips of underlayment felt, overlapping successive sheets 19 inches (483 mm). End laps shall be 4 inches (102 mm) and shall be offset by 6 feet (1829 mm).
   - 3.2. The underlayment shall be attached with corrosion-resistant fasteners in a grid pattern of 12 inches (305 mm) between side laps with a 6-inch (152 mm) spacing at side and end laps.
   - 3.3. Underlayment shall be attached using metal or plastic cap nails with a nominal cap diameter of not less than 1 inch (25 mm). Metal caps shall have a thickness of not less than 32-gage sheet metal. Power-driven metal caps shall have a thickness of not less than 0.010 inch (0.25 mm). Minimum thickness of the outside edge of plastic caps shall be 0.035 inch (0.89 mm).
   - 3.4. The cap nail shank shall be not less than 0.083 inch (2.11 mm) for ring shank cap nails and 0.091 inch (2.31 mm) for smooth shank cap nails. Cap nail shank shall have a length sufficient to penetrate through the roof sheathing or not less than $^3/_4$ inch (19 mm) into the roof sheathing.

TABLE R905.1.1(1)
UNDERLAYMENT TYPES

ROOF COVERING	SECTION	MAXIMUM ULTIMATE DESIGN WIND SPEED, V_{ult} < 140 MPH	MAXIMUM ULTIMATE DESIGN WIND SPEED, V_{ult} ≥ 140 MPH
Asphalt shingles	R905.2	ASTM D226 Type I ASTM D4869 Type I, II, III or IV ASTM D6757	ASTM D226 Type II ASTM D4869 Type III or Type IV ASTM D6757
Clay and concrete tile	R905.3	ASTM D226 Type II ASTM D2626 Type I ASTM D6380 Class M mineral-surfaced roll roofing	ASTM D226 Type II ASTM D2626 Type I ASTM D6380 Class M mineral-surfaced roll roofing
Metal roof shingles	R905.4	ASTM D226 Type I or II ASTM D4869 Type I, II, III or IV	ASTM D226 Type II ASTM D4869 Type III or Type IV
Mineral-surfaced roll roofing	R905.5	ASTM D226 Type I or II ASTM D4869 Type I, II, III or IV	ASTM D226 Type II ASTM D4869 Type III or Type IV
Slate and slate-type shingles	R905.6	ASTM D226 Type I ASTM D4869 Type I, II, III or IV	ASTM D226 Type II ASTM D4869 Type III or Type IV
Wood shingles	R905.7	ASTM D226 Type I or II ASTM D4869 Type I, II, III or IV	ASTM D226 Type II ASTM D4869 Type III or Type IV
Wood shakes	R905.8	ASTM D226 Type I or II ASTM D4869 Type I, II, III or IV	ASTM D226 Type II ASTM D4869 Type III or Type IV
Metal panels	R905.10	Manufacturer's instructions	ASTM D226 Type II ASTM D4869 Type III or Type IV
Photovoltaic shingles	R905.16	ASTM D4869 Type I, II, III or IV ASTM D6757	ASTM D4869 Type III or Type IV ASTM D6757

For SI: 1 mile per hour = 0.447 m/s.

TABLE R905.1.1(2)
UNDERLAYMENT APPLICATION

ROOF COVERING	SECTION	MAXIMUM ULTIMATE DESIGN WIND SPEED, V_{ult} < 140 MPH	MAXIMUM ULTIMATE DESIGN WIND SPEED, V_{ult} ≥ 140 MPH
Asphalt shingles	R905.2	For roof slopes from two units vertical in 12 units horizontal (2:12), up to four units vertical in 12 units horizontal (4:12), underlayment shall be two layers applied in the following manner: apply a 19-inch strip of underlayment felt parallel to and starting at the eaves. Starting at the eave, apply 36-inch-wide sheets of underlayment, overlapping successive sheets 19 inches. Distortions in the underlayment shall not interfere with the ability of the shingles to seal. End laps shall be 4 inches and shall be offset by 6 feet. For roof slopes of four units vertical in 12 units horizontal (4:12) or greater, underlayment shall be one layer applied in the following manner: underlayment shall be applied shingle fashion, parallel to and starting from the eave and lapped 2 inches, Distortions in the underlayment shall not interfere with the ability of the shingles to seal. End laps shall be 4 inches and shall be offset by 6 feet.	Same as Maximum Ultimate Design Wind Speed, V_{ult} < 140 mph except all laps shall be not less than 4 inches.
Clay and concrete tile	R905.3	For roof slopes from two and one-half units vertical in 12 units horizontal ($2^1/_2$:12), up to four units vertical in 12 units horizontal (4:12), underlayment shall be not fewer than two layers applied as follows: starting at the eave, apply a 19-inch strip of underlayment parallel with the eave. Starting at the eave, apply 36-inch-wide strips of underlayment felt, overlapping successive sheets 19 inches. End laps shall be 4 inches and shall be offset by 6 feet. For roof slopes of four units vertical in 12 units horizontal (4:12) or greater, underlayment shall be not fewer than one layer of underlayment felt applied shingle fashion, parallel to and starting from the eaves and lapped 2 inches. End laps shall be 4 inches and shall be offset by 6 feet.	Same as Maximum Ultimate Design Wind Speed, V_{ult} < 140 mph, except all laps shall be not less than 4 inches.
Metal roof shingles	R905.4	Apply in accordance with the manufacturer's installation instructions.	For roof slopes from two units vertical in 12 units horizontal (2:12), up to four units vertical in 12 units horizontal (4:12), underlayment shall be two layers applied in the following manner: apply a 19-inch strip of underlayment felt parallel to and starting at the eaves. Starting at the eave, apply 36-inch-wide sheets of underlayment, overlapping successive sheets 19 inches. End laps shall be 4 inches and shall be offset by 6 feet. For roof slopes of four units vertical in 12 units horizontal (4:12) or greater, underlayment shall be one layer applied in the following manner: underlayment shall be applied shingle fashion, parallel to and starting from the eave and lapped 4 inches. End laps shall be 4 inches and shall be offset by 6 feet.
Mineral-surfaced roll roofing	R905.5		
Slate and slate-type shingles	R905.6		
Wood shingles	R905.7		
Wood shakes	R905.8		
Metal panels	R905.10		

(continued)

TABLE R905.1.1(2)—continued
UNDERLAYMENT APPLICATION

ROOF COVERING	SECTION	MAXIMUM ULTIMATE DESIGN WIND SPEED, V_{ult} < 140 MPH	MAXIMUM ULTIMATE DESIGN WIND SPEED, V_{ult} ≥ 140 MPH
Photovoltaic shingles	R905.16	For roof slopes from two units vertical in 12 units horizontal (2:12), up to four units vertical in 12 units horizontal (4:12), underlayment shall be two layers applied in the following manner: apply a 19-inch strip of underlayment felt parallel to and starting at the eaves. Starting at the eave, apply 36-inch-wide sheets of underlayment, overlapping successive sheets 19 inches. Distortions in the underlayment shall not interfere with the ability of the shingles to seal. End laps shall be 4 inches and shall be offset by 6 feet. For roof slopes of four units vertical in 12 units horizontal (4:12) or greater, underlayment shall be one layer applied in the following manner: underlayment shall be applied shingle fashion, parallel to and starting from the eave and lapped 2 inches. Distortions in the underlayment shall not interfere with the ability of the shingles to seal. End laps shall be 4 inches and shall be offset by 6 feet.	Same as Maximum Ultimate Design Wind Speed, V_{ult} < 140 mph, except all laps shall be not less than 4 inches.

For SI: 1 inch = 25.4 mm, 1 foot = 304.8 mm, 1 mile per hour = 0.447 m/s.

TABLE R905.1.1(3)
UNDERLAYMENT ATTACHMENT

ROOF COVERING	SECTION	MAXIMUM ULTIMATE DESIGN WIND SPEED, V_{ult} < 140 MPH	MAXIMUM ULTIMATE DESIGN WIND SPEED, V_{ult} ≥ 140 MPH
Asphalt shingles	R905.2	Fastened sufficiently to hold in place	The underlayment shall be attached with corrosion-resistant fasteners in a grid pattern of 12 inches between side laps with a 6-inch spacing at side and end laps. Underlayment shall be attached using metal or plastic cap nails or cap staples with a nominal cap diameter of not less than 1 inch. Metal caps shall have a thickness of not less than 32-gage sheet metal. Power-driven metal caps shall have a minimum thickness of 0.010 inch. Minimum thickness of the outside edge of plastic caps shall be 0.035 inch. The cap nail shank shall be not less than 0.083 inch for ring shank cap nails and 0.091 inch for smooth shank cap nails. Staples shall be not less than 21 gage. Cap nail shank and cap staple legs shall have a length sufficient to penetrate through the roof sheathing or not less than $^3/_4$ inch into the roof sheathing.
Clay and concrete tile	R905.3		
Photovoltaic	R905.16		
Metal roof shingles	R905.4	Manufacturer's installation instructions.	The underlayment shall be attached with corrosion-resistant fasteners in a grid pattern of 12 inches between side laps with a 6-inch spacing at side and end laps. Underlayment shall be attached using metal or plastic cap nails or cap staples with a nominal cap diameter of not less than 1 inch. Metal caps shall have a thickness of not less than 32-gage sheet metal. Power-driven metal caps shall have a minimum thickness of 0.010 inch. Minimum thickness of the outside edge of plastic caps shall be 0.035 inch. The cap nail shank shall be not less than 0.083 inch for ring shank cap nails and 0.091 inch for smooth shank cap nails. Staples shall be not less than 21 gage. Cap nail shank and cap staple legs shall have a length sufficient to penetrate through the roof sheathing or not less than $^3/_4$ inch into the roof sheathing.
Mineral-surfaced roll roofing	R905.5		
Slate and slate-type shingles	R905.6		
Wood shingles	R905.7		
Wood shakes	R905.8		
Metal panels	R905.10		

For SI: 1 inch = 25.4 mm, 1 mile per hour = 0.447 m/s.

R905.1.2 Ice barriers. In areas where there has been a history of ice forming along the eaves causing a backup of water as designated in Table R301.2(1), an ice barrier shall be installed for asphalt shingles, metal roof shingles, mineral-surfaced roll roofing, slate and slate-type shingles, wood shingles and wood shakes. The ice barrier shall consist of not fewer than two layers of underlayment cemented together, or a self-adhering polymer-modified bitumen sheet shall be used in place of normal underlayment and extend from the lowest edges of all roof surfaces to a point not less than 24 inches (610 mm) inside the exterior wall line of the building. On roofs with slope equal to or greater than eight units vertical in 12 units horizontal (67-percent slope), the ice barrier shall also be applied not less than 36 inches (914 mm) measured along the roof slope from the eave edge of the building.

Exception: Detached accessory structures not containing conditioned floor area.

R905.2 Asphalt shingles. The installation of asphalt shingles shall comply with the provisions of this section.

R905.2.1 Sheathing requirements. Asphalt shingles shall be fastened to solidly sheathed decks.

R905.2.2 Slope. Asphalt shingles shall be used only on roof slopes of two units vertical in 12 units horizontal (17-percent slope) or greater. For roof slopes from two units vertical in 12 units horizontal (17-percent slope) up to four units vertical in 12 units horizontal (33-percent slope), double underlayment application is required in accordance with Section R905.1.1.

R905.2.3 Underlayment. Underlayment shall comply with Section R905.1.1.

R905.2.4 Asphalt shingles. Asphalt shingles shall comply with ASTM D3462.

R905.2.4.1 Wind resistance of asphalt shingles. Asphalt shingles shall be tested in accordance with ASTM D7158. Asphalt shingles shall meet the classification requirements of Table R905.2.4.1 for the appropriate ultimate design wind speed. Asphalt shingle packaging shall bear a label to indicate compliance with ASTM D7158 and the required classification in Table R905.2.4.1.

Exception: Asphalt shingles not included in the scope of ASTM D7158 shall be tested and labeled in accordance with ASTM D3161. Asphalt shingle packaging shall bear a label to indicate compliance with ASTM D3161 and the required classification in Table R905.2.4.1.

R905.2.5 Fasteners. Fasteners for asphalt shingles shall be galvanized steel, stainless steel, aluminum or copper roofing nails, minimum 12-gage [0.105 inch (3 mm)] shank with a minimum $^3/_8$-inch-diameter (9.5 mm) head, complying with ASTM F1667, of a length to penetrate through the roofing materials and not less than $^3/_4$ inch (19.1 mm) into the roof sheathing. Where the roof sheathing is less than $^3/_4$ inch (19.1 mm) thick, the fasteners shall penetrate through the sheathing.

R905.2.6 Attachment. Asphalt shingles shall have the minimum number of fasteners required by the manufacturer's approved installation instructions, but not less than four fasteners per strip shingle or two fasteners per individual shingle. Where the roof slope exceeds 21 units vertical in 12 units horizontal (21:12, 175-percent slope), shingles shall be installed in accordance with the manufacturer's approved installation instructions.

R905.2.7 Ice barrier. Where required, ice barriers shall comply with Section R905.1.2.

R905.2.8 Flashing. Flashing for asphalt shingles shall comply with this section and the asphalt shingle manufacturer's approved installation instructions.

R905.2.8.1 Base and cap flashing. Base and cap flashing shall be installed in accordance with manufacturer's instructions. Base flashing shall be of either corrosion-resistant metal of minimum nominal 0.019-inch (0.5 mm) thickness or mineral-surfaced roll roofing weighing not less than 77 pounds per 100 square feet (4 kg/m^2). Cap flashing shall be corrosion-resistant metal of minimum nominal 0.019-inch (0.5 mm) thickness.

TABLE R905.2.4.1
CLASSIFICATION OF ASPHALT ROOF SHINGLES

MAXIMUM ULTIMATE DESIGN WIND SPEED, V_{ult} FROM FIGURE R301.2(5)A (mph)	MAXIMUM BASIC WIND SPEED, V_{ASD} FROM TABLE R301.2.1.3 (mph)	ASTM D7158[a] SHINGLE CLASSIFICATION	ASTM D3161 SHINGLE CLASSIFICATION
110	85	D, G or H	A, D or F
116	90	D, G or H	A, D or F
129	100	G or H	A, D or F
142	110	G or H	F
155	120	G or H	F
168	130	H	F
181	140	H	F
194	150	H	F

For SI: 1 foot = 304.8 mm; 1 mile per hour = 0.447 m/s.

a. The standard calculations contained in ASTM D7158 assume Exposure Category B or C and a building height of 60 feet or less. Additional calculations are required for conditions outside of these assumptions.

R905.2.8.2 Valleys. Valley linings shall be installed in accordance with the manufacturer's instructions before applying shingles. Valley linings of the following types shall be permitted:

1. For open valleys (valley lining exposed) lined with metal, the valley lining shall be not less than 24 inches (610 mm) wide and of any of the corrosion-resistant metals in Table R905.2.8.2.
2. For open valleys, valley lining of two plies of mineral-surfaced roll roofing, complying with ASTM D3909 or ASTM D6380 Class M, shall be permitted. The bottom layer shall be 18 inches (457 mm) and the top layer not less than 36 inches (914 mm) wide.
3. For closed valleys (valley covered with shingles), valley lining of one ply of smooth roll roofing complying with ASTM D6380 and not less than 36 inches wide (914 mm) or valley lining as described in Item 1 or 2 shall be permitted. Self-adhering polymer-modified bitumen underlayment complying with ASTM D1970 shall be permitted in lieu of the lining material.

R905.2.8.3 Sidewall flashing. Base flashing against a vertical sidewall shall be continuous or step flashing and shall be not less than 4 inches (102 mm) in height and 4 inches (102 mm) in width and shall direct water away from the vertical sidewall onto the roof or into the gutter. Where siding is provided on the vertical sidewall, the vertical leg of the flashing shall be continuous under the siding. Where anchored masonry veneer is provided on the vertical sidewall, the base flashing shall be provided in accordance with this section and counterflashing shall be provided in accordance with Section R703.8.2.2. Where exterior plaster or adhered masonry veneer is provided on the vertical sidewall, the base flashing shall be provided in accordance with this section and Section R703.6.3.

R905.2.8.4 Other flashing. Flashing against a vertical front wall, as well as soil stack, vent pipe and chimney flashing, shall be applied in accordance with the asphalt shingle manufacturer's printed instructions.

R905.2.8.5 Drip edge. A drip edge shall be provided at eaves and rake edges of shingle roofs. Adjacent segments of drip edge shall be overlapped not less than 2 inches (51 mm). Drip edges shall extend not less than $^1/_4$ inch (6.4 mm) below the roof sheathing and extend up back onto the roof deck not less than 2 inches (51 mm). Drip edges shall be mechanically fastened to the roof deck at not more than 12 inches (305 mm) o.c. with fasteners as specified in Section R905.2.5. Underlayment shall be installed over the drip edge along eaves and under the drip edge along rake edges.

R905.3 Clay and concrete tile. The installation of clay and concrete tile shall comply with the provisions of this section.

R905.3.1 Deck requirements. Concrete and clay tile shall be installed only over solid sheathing or spaced structural sheathing boards.

R905.3.2 Deck slope. Clay and concrete roof tile shall be installed on roof slopes of two and one-half units vertical in 12 units horizontal (25-percent slope) or greater. For roof slopes from two and one-half units vertical in 12 units horizontal (25-percent slope) to four units vertical in 12 units horizontal (33-percent slope), double underlayment application is required in accordance with Section R905.3.3.

R905.3.3 Underlayment. Underlayment shall comply with Section R905.1.1.

R905.3.4 Clay tile. Clay roof tile shall comply with ASTM C1167.

R905.3.5 Concrete tile. Concrete roof tile shall comply with ASTM C1492.

R905.3.6 Fasteners. Nails shall be corrosion resistant and not less than 11-gage, $^5/_{16}$-inch (11 mm) head, and of sufficient length to penetrate the deck not less than $^3/_4$ inch (19 mm) or through the thickness of the deck, whichever is less. Attaching wire for clay or concrete tile shall not be smaller than 0.083 inch (2 mm). Perimeter fastening areas include three tile courses but not less than 36 inches (914 mm) from either side of hips or ridges and edges of eaves and gable rakes.

TABLE R905.2.8.2
VALLEY LINING MATERIAL

MATERIAL	MINIMUM THICKNESS (inches)	GAGE	WEIGHT (pounds)
Cold-rolled copper	0.0216 nominal	—	ASTM B370, 16 oz. per square foot
Lead-coated copper	0.0216 nominal	—	ASTM B101, 16 oz. per square foot
High-yield copper	0.0162 nominal	—	ASTM B370, 12 oz. per square foot
Lead-coated high-yield copper	0.0162 nominal	—	ASTM B101, 12 oz. per square foot
Aluminum	0.024	—	—
Stainless steel	—	28	—
Galvanized steel	0.0179	26 (zinc coated G90)	—
Zinc alloy	0.027	—	—
Lead	—	—	$2^1/_2$
Painted terne	—	—	20

For SI: 1 inch = 25.4 mm, 1 pound = 0.454 kg.

R905.3.7 Application. Tile shall be applied in accordance with this chapter and the manufacturer's installation instructions, based on the following:

1. Climatic conditions.
2. Roof slope.
3. Underlayment system.
4. Type of tile being installed.

Clay and concrete roof tiles shall be fastened in accordance with this section and the manufacturer's installation instructions. Perimeter tiles shall be fastened with not less than one fastener per tile. Tiles with installed weight less than 9 pounds per square foot (0.4 kg/m^2) require not less than one fastener per tile regardless of roof slope. Clay and concrete roof tile attachment shall be in accordance with the manufacturer's installation instructions where applied in areas where the ultimate design wind speed exceeds 130 miles per hour (58 m/s) and on buildings where the roof is located more than 40 feet (12 192 mm) above grade. In areas subject to snow, not less than two fasteners per tile are required. In other areas, clay and concrete roof tiles shall be attached in accordance with Table R905.3.7.

TABLE R905.3.7
CLAY AND CONCRETE TILE ATTACHMENT

SHEATHING	ROOF SLOPE	NUMBER OF FASTENERS
Solid without battens	All	One per tile
Spaced or solid with battens and slope < 5:12	Fasteners not required	—
Spaced sheathing without battens	5:12 ≤ slope < 12:12	One per tile/ every other row
	12:12 ≤ slope < 24:12	One per tile

R905.3.8 Flashing. At the juncture of roof vertical surfaces, flashing and counterflashing shall be provided in accordance with this chapter and the manufacturer's installation instructions and, where of metal, shall be not less than 0.019 inch (0.5 mm) (No. 26 galvanized sheet gage) corrosion-resistant metal. The valley flashing shall extend not less than 11 inches (279 mm) from the centerline each way and have a splash diverter rib not less than 1 inch (25 mm) in height at the flow line formed as part of the flashing. Sections of flashing shall have an end lap of not less than 4 inches (102 mm). For roof slopes of three units vertical in 12 units horizontal (25-percent slope) and greater, valley flashing shall have a 36-inch-wide (914 mm) underlayment of one layer of Type I underlayment running the full length of the valley, in addition to other required underlayment. In areas where the average daily temperature in January is 25°F (-4°C) or less, metal valley flashing underlayment shall be solid-cemented to the roofing underlayment for slopes less than seven units vertical in 12 units horizontal (58-percent slope) or be of self-adhering polymer-modified bitumen sheet.

R905.4 Metal roof shingles. The installation of metal roof shingles shall comply with the provisions of this section.

R905.4.1 Deck requirements. Metal roof shingles shall be applied to a solid or closely fitted deck, except where the roof covering is specifically designed to be applied to spaced sheathing.

R905.4.2 Deck slope. Metal roof shingles shall not be installed on roof slopes below three units vertical in 12 units horizontal (25-percent slope).

R905.4.3 Underlayment. Underlayment shall comply with Section R905.1.1.

R905.4.3.1 Ice barrier. Where required, ice barriers shall comply with Section R905.1.2.

R905.4.4 Material standards. Metal roof shingle roof coverings shall comply with Table R905.10.3(1). The materials used for metal roof shingle roof coverings shall be naturally corrosion resistant or be made corrosion resistant in accordance with the standards and minimum thicknesses listed in Table R905.10.3(2).

R905.4.5 Application. Metal roof shingles shall be secured to the roof in accordance with this chapter and the approved manufacturer's installation instructions.

R905.4.6 Flashing. Roof valley flashing shall be of corrosion-resistant metal of the same material as the roof covering or shall comply with the standards in Table R905.10.3(1). The valley flashing shall extend not less than 8 inches (203 mm) from the centerline each way and shall have a splash diverter rib not less than $^3/_4$ inch (19 mm) in height at the flow line formed as part of the flashing. Sections of flashing shall have an end lap of not less than 4 inches (102 mm). The metal valley flashing shall have a 36-inch-wide (914 mm) underlayment directly under it consisting of one layer of underlayment running the full length of the valley, in addition to underlayment required for metal roof shingles. In areas where the average daily temperature in January is 25°F (-4°C) or less, the metal valley flashing underlayment shall be solid-cemented to the roofing underlayment for roof slopes under seven units vertical in 12 units horizontal (58-percent slope) or self-adhering polymer-modified bitumen sheet.

R905.5 Mineral-surfaced roll roofing. The installation of mineral-surfaced roll roofing shall comply with this section.

R905.5.1 Deck requirements. Mineral-surfaced roll roofing shall be fastened to solidly sheathed roofs.

R905.5.2 Deck slope. Mineral-surfaced roll roofing shall not be applied on roof slopes below one unit vertical in 12 units horizontal (8-percent slope).

R905.5.3 Underlayment. Underlayment shall comply with Section R905.1.1.

R905.5.3.1 Ice barrier. Where required, ice barriers shall comply with Section R905.1.2.

R905.5.4 Material standards. Mineral-surfaced roll roofing shall conform to ASTM D3909 or ASTM D6380, Class M.

R905.5.5 Application. Mineral-surfaced roll roofing shall be installed in accordance with this chapter and the manufacturer's instructions.

R905.6 Slate shingles. The installation of slate shingles shall comply with the provisions of this section.

R905.6.1 Deck requirements. Slate shingles shall be fastened to solidly sheathed roofs.

R905.6.2 Deck slope. Slate shingles shall be used only on slopes of four units vertical in 12 units horizontal (33-percent slope) or greater.

R905.6.3 Underlayment. Underlayment shall comply with Section R905.1.1.

R905.6.3.1 Ice barrier. Where required, ice barriers shall comply with Section R905.1.2.

R905.6.4 Material standards. Slate shingles shall comply with ASTM C406.

R905.6.5 Application. Minimum headlap for slate shingles shall be in accordance with Table R905.6.5. Slate shingles shall be secured to the roof with two fasteners per slate. Slate shingles shall be installed in accordance with this chapter and the manufacturer's instructions.

TABLE R905.6.5
SLATE SHINGLE HEADLAP

SLOPE	HEADLAP (inches)
4:12 ≤ slope < 8:12	4
8:12 ≤ slope < 20:12	3
Slope ≥ 20:12	2

For SI: 1 inch = 25.4 mm.

R905.6.6 Flashing. Flashing and counterflashing shall be made with sheet metal. Valley flashing shall be not less than 15 inches (381 mm) wide. Valley and flashing metal shall be a minimum uncoated thickness of 0.0179-inch (0.5 mm) zinc coated G90. Chimneys, stucco or brick walls shall have not less than two plies of felt for a cap flashing consisting of a 4-inch-wide (102 mm) strip of felt set in plastic cement and extending 1 inch (25 mm) above the first felt and a top coating of plastic cement. The felt shall extend 2 inches (51 mm) over the base flashing.

R905.7 Wood shingles. The installation of wood shingles shall comply with the provisions of this section.

R905.7.1 Deck requirements. Wood shingles shall be installed on solid or spaced sheathing. Where spaced sheathing is used, sheathing boards shall be not less than 1-inch by 4-inch (25 mm by 102 mm) nominal dimensions and shall be spaced on centers equal to the weather exposure to coincide with the placement of fasteners.

R905.7.1.1 Solid sheathing required. In areas where the average daily temperature in January is 25°F (-4°C) or less, solid sheathing is required on that portion of the roof requiring the application of an ice barrier.

R905.7.2 Deck slope. Wood shingles shall be installed on slopes of three units vertical in 12 units horizontal (25-percent slope) or greater.

R905.7.3 Underlayment. Underlayment shall comply with Section R905.1.1.

R905.7.3.1 Ice barrier. Where required, ice barriers shall comply with Section R905.1.2.

R905.7.4 Material standards. Wood shingles shall be of naturally durable wood and comply with the requirements of Table R905.7.4.

TABLE R905.7.4
WOOD SHINGLE MATERIAL REQUIREMENTS

MATERIAL	MINIMUM GRADES	APPLICABLE GRADING RULES
Wood shingles of naturally durable wood	1, 2 or 3	CSSB

R905.7.5 Application. Wood shingles shall be installed in accordance with this chapter and the manufacturer's instructions. Wood shingles shall be laid with a side lap not less than $1^1/_2$ inches (38 mm) between joints in courses, and two joints shall not be in direct alignment in any three adjacent courses. Spacing between shingles shall be not less than $^1/_4$ inch to $^3/_8$ inch (6.4 mm to 9.5 mm). Weather exposure for wood shingles shall not exceed those set in Table R905.7.5(1). Fasteners for untreated (naturally durable) wood shingles shall be box nails in accordance with Table R905.7.5(2). Nails shall be stainless steel Type 304 or 316 or hot-dipped galvanized with a coating weight of ASTM A153 Class D (1.0 oz/ft^2). Alternatively, two 16-gage stainless steel Type 304 or 316 staples with crown widths $^7/_{16}$ inch (11.1 mm) minimum, $^3/_4$ inch (19.1 mm) maximum, shall be used. Fasteners installed within 15 miles (24 km) of saltwater coastal areas shall be stainless steel Type 316. Fasteners for fire-retardant-treated shingles in accordance with Section R902 or pressure-impregnated-preservative-treated shingles of naturally durable wood in accordance with AWPA U1 shall be stainless steel Type 316. Fasteners shall have a minimum penetration into the sheathing of $^3/_4$ inch (19.1 mm). For sheathing less than $^3/_4$ inch in (19.1 mm) thickness, each fastener shall penetrate through the sheathing. Wood shingles shall be attached to the roof with two fasteners per shingle, positioned in accordance with the manufacturer's installation instructions. Fastener packaging shall bear a label indicating the appropriate grade material or coating weight.

TABLE R905.7.5(1)
WOOD SHINGLE WEATHER EXPOSURE AND ROOF SLOPE

ROOFING MATERIAL	LENGTH (inches)	GRADE	EXPOSURE (inches)	
			3:12 pitch to < 4:12	4:12 pitch or steeper
Shingles of naturally durable wood	16	No. 1	$3^3/_4$	5
		No. 2	$3^1/_2$	4
		No. 3	3	$3^1/_2$
	18	No. 1	$4^1/_4$	$5^1/_2$
		No. 2	4	$4^1/_2$
		No. 3	$3^1/_2$	4
	24	No. 1	$5^3/_4$	$7^1/_2$
		No. 2	$5^1/_2$	$6^1/_2$
		No. 3	5	$5^1/_2$

For SI: 1 inch = 25.4 mm.

TABLE R905.7.5(2)
NAIL REQUIREMENTS FOR WOOD SHAKES AND WOOD SHINGLES

SHAKES	NAIL TYPE AND MINIMUM LENGTH	MINIMUM HEAD SIZE	MINIMUM SHANK DIAMETER
18″ straight-split	5d box $1^3/_4$″	0.19″	.080″
18″ and 24″ handsplit and resawn	6d box 2″	0.19″	.0915″
24″ taper-split	5d box $1^3/_4$″	0.19″	.080″
18″ and 24″ tapersawn	6d box 2″	0.19″	.0915″
Shingles	**Nail Type and Minimum Length**	**Minimum Head Size**	**Minimum Shank Diameter**
16″ and 18″	3d box $1^1/_4$″	0.19″	.080″
24″	4d box $1^1/_2$″	0.19″	.080″

For SI: 1 inch = 25.4 mm.

R905.7.6 Valley flashing. Roof flashing shall be not less than No. 26 gage [0.019 inches (0.5 mm)] corrosion-resistant sheet metal and shall extend 10 inches (254 mm) from the centerline each way for roofs having slopes less than 12 units vertical in 12 units horizontal (100-percent slope), and 7 inches (178 mm) from the centerline each way for slopes of 12 units vertical in 12 units horizontal (100-percent slope) and greater. Sections of flashing shall have an end lap of not less than 4 inches (102 mm).

R905.7.7 Label required. Each bundle of shingles shall be identified by a label of an approved grading or inspection bureau or agency.

R905.8 Wood shakes. The installation of wood shakes shall comply with the provisions of this section.

R905.8.1 Deck requirements. Wood shakes shall be used only on solid or spaced sheathing. Where spaced sheathing is used, sheathing boards shall be not less than 1-inch by 4-inch (25 mm by 102 mm) nominal dimensions and shall be spaced on centers equal to the weather exposure to coincide with the placement of fasteners. Where 1-inch by 4-inch (25 mm by 102 mm) spaced sheathing is installed at 10 inches (254 mm) on center, additional 1-inch by 4-inch (25 mm by 102 mm) boards shall be installed between the sheathing boards.

R905.8.1.1 Solid sheathing required. In areas where the average daily temperature in January is 25°F (-4°C) or less, solid sheathing is required on that portion of the roof requiring an ice barrier.

R905.8.2 Deck slope. Wood shakes shall only be used on slopes of three units vertical in 12 units horizontal (25-percent slope) or greater.

R905.8.3 Underlayment. Underlayment shall comply with Section R905.1.1.

R905.8.3.1 Ice barrier. Where required, ice barriers shall comply with Section R905.1.2.

R905.8.4 Interlayment. Interlayment shall comply with ASTM D226, Type I.

R905.8.5 Material standards. Wood shakes shall comply with the requirements of Table R905.8.5.

TABLE R905.8.5
WOOD SHAKE MATERIAL REQUIREMENTS

MATERIAL	MINIMUM GRADES	APPLICABLE GRADING RULES
Wood shakes of naturally durable wood	1	Cedar Shake and Shingle Bureau
Tapersawn shakes of naturally durable wood	1 or 2	Cedar Shake and Shingle Bureau
Preservative-treated shakes and shingles of naturally durable wood	1	Cedar Shake and Shingle Bureau
Fire-retardant-treated shakes and shingles of naturally durable wood	1	Cedar Shake and Shingle Bureau
Preservative-treated tapersawn shakes of Southern pine treated in accordance with AWPA Standard U1 (Commodity Specification A, Special Requirement 4.6)	1 or 2	Forest Products Laboratory of the Texas Forest Services

R905.8.6 Application. Wood shakes shall be installed in accordance with this chapter and the manufacturer's installation instructions. Wood shakes shall be laid with a side lap not less than $1^1/_2$ inches (38 mm) between joints in adjacent courses. Spacing between shakes in the same course shall be $^3/_8$ inch to $^5/_8$ inch (9.5 mm to 15.9 mm) including tapersawn shakes. Weather exposures for wood shakes shall not exceed those set in Table R905.8.6. Fasteners for untreated (naturally durable) wood shakes shall be box nails in accordance with Table R905.7.5(2). Nails shall be stainless steel Type 304, or Type 316 or hot-dipped with a coating weight of ASTM A153 Class D (1.0 oz/ft^2). Alternatively, two 16-gage Type 304 or Type 316 stainless steel staples, with crown widths $^7/_{16}$ inch (11.1 mm) minimum, $^3/_4$ inch (19.1 mm) maximum, shall be used. Fasteners installed within 15 miles (24 km) of salt-water coastal areas shall be stainless steel Type 316. Wood shakes shall be attached to the roof with two fasteners per shake positioned in accordance with the manufacturer's installation instructions Fasteners for fire-retardant-treated (as defined in Section R902) shakes or pressure-impregnated-preservative-treated shakes of naturally durable wood in accordance with AWPA U1 shall be stainless steel Type 316. Fasteners shall have a minimum penetration into the sheathing of $^3/_4$ inch (19.1 mm). Where the sheathing is less than $^3/_4$ inch (19.1 mm) thick, each fastener shall penetrate through the sheathing. Fastener packaging shall bear a label indicating the appropriate grade material or coating weight.

R905.8.7 Shake placement. The starter course at the eaves shall be doubled and the bottom layer shall be either 15-inch (381 mm), 18-inch (457 mm) or 24-inch (610 mm) wood shakes or wood shingles. Fifteen-inch (381 mm) or 18-inch (457 mm) wood shakes shall be permitted to be used for the final course at the ridge. Shakes shall be interlaid with 18-inch-wide (457 mm) strips of not less than No. 30 felt shingled between each course in such a manner that felt is not exposed to the weather by positioning the lower edge of each felt strip above the butt end of the shake it covers a distance equal to twice the weather exposure.

TABLE R905.8.6
WOOD SHAKE WEATHER EXPOSURE AND ROOF SLOPE

ROOFING MATERIAL	LENGTH (inches)	GRADE	EXPOSURE (inches)
			4:12 pitch or steeper
Shakes of naturally durable wood	18	No. 1	$7^1/_2$
	24	No. 1	10[a]
Preservative-treated tapersawn shakes of Southern Yellow Pine	18	No. 1	$7^1/_2$
	24	No. 1	10
	18	No. 2	$5^1/_2$
	24	No. 2	$7^1/_2$
Taper-sawn shakes of naturally durable wood	18	No. 1	$7^1/_2$
	24	No. 1	10
	18	No. 2	$5^1/_2$
	24	No. 2	$7^1/_2$

For SI: 1 inch = 25.4 mm.
a. For 24-inch by $^3/_8$-inch handsplit shakes, the maximum exposure is $7^1/_2$ inches.

R905.8.8 Valley flashing. Roof valley flashing shall be not less than No. 26 gage [0.019 inch (0.5 mm)] corrosion-resistant sheet metal and shall extend not less than 11 inches (279 mm) from the centerline each way. Sections of flashing shall have an end lap of not less than 4 inches (102 mm).

R905.8.9 Label required. Each bundle of shakes shall be identified by a label of an approved grading or inspection bureau or agency.

R905.9 Built-up roofs. The installation of built-up roofs shall comply with the provisions of this section and the manufacturer's approved installation instructions.

R905.9.1 Slope. Built-up roofs shall have a design slope of not less than one-fourth unit vertical in 12 units horizontal (2-percent slope) for drainage, except for coal-tar built-up roofs, which shall have a design slope of a minimum one-eighth unit vertical in 12 units horizontal (1-percent slope).

R905.9.2 Material standards. Built-up roof covering materials shall comply with the standards in Table R905.9.2 or UL 55A.

R905.9.3 Application. Built-up roofs shall be installed in accordance with this chapter and the manufacturer's instructions.

R905.10 Metal roof panels. The installation of metal roof panels shall comply with the provisions of this section.

R905.10.1 Deck requirements. Metal roof panel roof coverings shall be applied to solid or spaced sheathing, except where the roof covering is specifically designed to be applied to spaced supports.

R905.10.2 Slope. Minimum slopes for metal roof panels shall comply with the following:

1. The minimum slope for lapped, nonsoldered-seam metal roofs without applied lap sealant shall be three units vertical in 12 units horizontal (25-percent slope).
2. The minimum slope for lapped, nonsoldered-seam metal roofs with applied lap sealant shall be one-half unit vertical in 12 units horizontal (4-percent slope). Lap sealants shall be applied in accordance with the approved manufacturer's installation instructions.
3. The minimum slope for standing-seam roof systems shall be one-quarter unit vertical in 12 units horizontal (2-percent slope).

R905.10.3 Material standards. Metal-sheet roof covering systems that incorporate supporting structural members shall be designed in accordance with the *California Building Code*. Metal-sheet roof coverings installed over structural decking shall comply with Table R905.10.3(1). The materials used for metal-sheet roof coverings shall be naturally corrosion resistant or provided with corrosion resistance in accordance with the standards and minimum thicknesses shown in Table R905.10.3(2).

TABLE R905.10.3(2)
MINIMUM CORROSION RESISTANCE

55% aluminum-zinc-alloy-coated steel	ASTM A792 AZ 50
5% aluminum alloy-coated steel	ASTM A875 GF60
Aluminum-coated steel	ASTM A463 T2 65
Galvanized steel	ASTM A653 G-90
Prepainted steel	ASTM A755[a]

a. Paint systems in accordance with ASTM A755 shall be applied over steel products with corrosion-resistant coatings complying with ASTM A792, ASTM A875, ASTM A463, or ASTM A653.

R905.10.4 Attachment. Metal roof panels shall be secured to the supports in accordance with this chapter and the manufacturer's installation instructions. In the absence of manufacturer's installation instructions, the following fasteners shall be used:

1. Galvanized fasteners shall be used for steel roofs.
2. Copper, brass, bronze, copper alloy and 300-series stainless steel fasteners shall be used for copper roofs.
3. Stainless steel fasteners are acceptable for metal roofs.

TABLE R905.9.2
BUILT-UP ROOFING MATERIAL STANDARDS

MATERIAL STANDARD	STANDARD
Acrylic coatings used in roofing	ASTM D6083
Aggregate surfacing	ASTM D1863
Asphalt adhesive used in roofing	ASTM D3747
Asphalt cements used in roofing	ASTM D2822; D3019; D4586
Asphalt-coated glass fiber base sheet	ASTM D4601
Asphalt coatings used in roofing	ASTM D1227; D2823; D2824; D4479
Asphalt glass felt	ASTM D2178
Asphalt primer used in roofing	ASTM D41
Asphalt-saturated and asphalt-coated organic felt base sheet	ASTM D2626
Asphalt-saturated organic felt (perforated)	ASTM D226
Asphalt used in roofing	ASTM D312
Coal-tar cements used in roofing	ASTM D4022; D5643
Coal-tar primer used in roofing, dampproofing and waterproofing	ASTM D43
Coal-tar saturated organic felt	ASTM D227
Coal-tar used in roofing	ASTM D450, Type I or II
Glass mat, coal tar	ASTM D4990
Glass mat, venting type	ASTM D4897
Mineral-surfaced inorganic cap sheet	ASTM D3909
Thermoplastic fabrics used in roofing	ASTM D5665; D5726

TABLE R905.10.3(1)
METAL ROOF COVERING STANDARDS

ROOF COVERING TYPE	STANDARD APPLICATION RATE/THICKNESS
Galvanized steel	ASTM A653 G90 Zinc coated
Stainless steel	ASTM A240, 300 Series alloys
Steel	ASTM A924
Lead-coated copper	ASTM B101
Cold-rolled copper	ASTM B370 minimum 16 oz/sq ft and 12 oz/sq ft high-yield copper for metal-sheet roof-covering systems; 12 oz/sq ft for preformed metal shingle systems.
Hard lead	2 lb/sq ft
Soft lead	3 lb/sq ft
Aluminum	ASTM B209, 0.024 minimum thickness for roll-formed panels and 0.019-inch minimum thickness for press-formed shingles.
Terne (tin) and terne-coated stainless	Terne coating of 40 lb per double base box, field painted where applicable in accordance with manufacturer's installation instructions.
Zinc	0.027 inch minimum thickness: 99.995% electrolytic high-grade zinc with alloy additives of copper (0.08 - 0.20%), titanium (0.07% - 0.12%) and aluminum (0.015%).

For SI: 1 ounce per square foot = 0.305 kg/m^2, 1 pound per square foot = 4.214 kg/m^2, 1 inch = 25.4 mm, 1 pound = 0.454 kg.

R905.10.5 Underlayment. Underlayment shall comply with Section R905.1.1.

R905.11 Modified bitumen roofing. The installation of modified bitumen roofing shall comply with the provisions of this section and the manufacturer's approved installation instructions.

R905.11.1 Slope. Modified bitumen roofing shall have a design slope of not less than one-fourth unit vertical in 12 units horizontal (2-percent slope) for drainage.

R905.11.2 Material standards. Modified bitumen roofing shall comply with the standards in Table R905.11.2.

TABLE R905.11.2
MODIFIED BITUMEN ROOFING MATERIAL STANDARDS

MATERIAL	STANDARD
Acrylic coating	ASTM D6083
Asphalt adhesive	ASTM D3747
Asphalt cement	ASTM D3019
Asphalt coating	ASTM D1227; D2824
Asphalt primer	ASTM D41
Modified bitumen roof membrane	ASTM D6162; D6163; D6164; D6222; D6223; D6298

R905.11.2.1 Base sheet. A base sheet that complies with the requirements of Section 1507.11.2 of the *California Building Code*, ASTM D1970, or ASTM D4601 shall be permitted to be used with a modified bitumen cap sheet.

R905.11.3 Application. Modified bitumen roofs shall be installed in accordance with this chapter and the manufacturer's instructions.

R905.12 Thermoset single-ply roofing. The installation of thermoset single-ply roofing shall comply with the provisions of this section.

R905.12.1 Slope. Thermoset single-ply membrane roofs shall have a design slope of not less than one-fourth unit vertical in 12 units horizontal (2-percent slope) for drainage.

R905.12.2 Material standards. Thermoset single-ply roof coverings shall comply with ASTM D4637 or ASTM D5019.

R905.12.3 Application. Thermoset single-ply roofs shall be installed in accordance with this chapter and the manufacturer's instructions.

R905.13 Thermoplastic single-ply roofing. The installation of thermoplastic single-ply roofing shall comply with the provisions of this section.

R905.13.1 Slope. Thermoplastic single-ply membrane roofs shall have a design slope of not less than one-fourth unit vertical in 12 units horizontal (2-percent slope).

R905.13.2 Material standards. Thermoplastic single-ply roof coverings shall comply with ASTM D4434, ASTM D6754 or ASTM D6878.

R905.13.3 Application. Thermoplastic single-ply roofs shall be installed in accordance with this chapter and the manufacturer's instructions.

R905.14 Sprayed polyurethane foam roofing. The installation of sprayed polyurethane foam roofing shall comply with the provisions of this section.

R905.14.1 Slope. Sprayed polyurethane foam roofs shall have a design slope of not less than one-fourth unit vertical in 12 units horizontal (2-percent slope) for drainage.

R905.14.2 Material standards. Spray-applied polyurethane foam insulation shall comply with ASTM C1029, Type III or IV or ASTM D7425.

R905.14.3 Application. Foamed-in-place roof insulation shall be installed in accordance with this chapter and the manufacturer's instructions. A liquid-applied protective coating that complies with Table R905.14.3 shall be applied not less than 2 hours nor more than 72 hours following the application of the foam.

TABLE R905.14.3
PROTECTIVE COATING MATERIAL STANDARDS

MATERIAL	STANDARD
Acrylic coating	ASTM D6083
Silicone coating	ASTM D6694
Moisture-cured polyurethane coating	ASTM D6947

R905.14.4 Foam plastics. Foam plastic materials and installation shall comply with Section R316.

R905.15 Liquid-applied roofing. The installation of liquid-applied roofing shall comply with the provisions of this section.

R905.15.1 Slope. Liquid-applied roofing shall have a design slope of not less than one-fourth unit vertical in 12 units horizontal (2-percent slope).

R905.15.2 Material standards. Liquid-applied roofing shall comply with ASTM C836, C957, D1227, D3468, D6083, D6694 or D6947.

R905.15.3 Application. Liquid-applied roofing shall be installed in accordance with this chapter and the manufacturer's installation instructions.

R905.16 Photovoltaic shingles. The installation of photovoltaic shingles shall comply with the provisions of this section, Section R324 and *the California Electrical Code.*

R905.16.1 Deck requirements. Photovoltaic shingles shall be applied to a solid or closely-fitted deck, except where the roof covering is specifically designed to be applied over spaced sheathing.

R905.16.2 Deck slope. Photovoltaic shingles shall be used only on roof slopes of two units vertical in 12 units horizontal (2:12) or greater.

R905.16.3 Underlayment. Underlayment shall comply with Section R905.1.1.

R905.16.3.1 Ice barrier. Where required, ice barriers shall comply with Section R905.1.2.

R905.16.4 Material standards. Photovoltaic shingles shall be listed and labeled in accordance with UL 1703.

R905.16.5 Attachment. Photovoltaic shingles shall be attached in accordance with the manufacturer's installation instructions.

R905.16.6 Wind resistance. Photovoltaic shingles shall be tested in accordance with procedures and acceptance criteria in ASTM D3161. Photovoltaic shingles shall comply with the classification requirements of Table R905.2.4.1 for the appropriate maximum basic wind speed. Photovoltaic shingle packaging shall bear a label to indicate compliance with the procedures in ASTM D3161 and the required classification from Table R905.2.4.1.

R905.17 Building-integrated Photovoltaic (BIPV) roof panels applied directly to the roof deck. The installation of BIPV roof panels shall comply with the provisions of this section, Section R324 and NFPA 70.

R905.17.1 Deck requirements. BIPV roof panels shall be applied to a solid or closely-fitted deck, except where the roof covering is specifically designed to be applied over spaced sheathing.

R905.17.2 Deck slope. BIPV roof panels shall be used only on roof slopes of two units vertical in 12 units horizontal (17-percent slope) or greater.

R905.17.3 Underlayment. Underlayment shall comply with Section 905.1.1.

R905.17.3.1 Ice barrier. Where required, an ice barrier shall comply with Section R905.1.2.

R905.17.4 Ice barrier. In areas where there has been a history of ice forming along the eaves causing a backup of water, as designated in Table R301.2(1), an ice barrier that consists of not less than two layers of underlayment cemented together or of a self-adhering polymer-modified bitumen sheet shall be used in lieu of normal underlayment and extend from the lowest edges of all roof surfaces to a point not less than 24 inches (610 mm) inside the exterior wall line of the building.

Exception: Detached accessory structures that do not contain conditioned floor area.

R905.17.5 Material standards. BIPV roof panels shall be listed and labeled in accordance with UL 1703.

R905.17.6 Attachment. BIPV roof panels shall be attached in accordance with the manufacturer's installation instructions.

R905.17.7 Wind resistance. BIPV roof panels shall be tested in accordance with UL 1897. BIPV roof panel packaging shall bear a label to indicate compliance with UL 1897.

SECTION R906
ROOF INSULATION

R906.1 General. The use of above-deck thermal insulation shall be permitted provided that such insulation is covered with an approved roof covering and complies with FM 4450 or UL 1256.

R906.2 Material standards. Above-deck thermal insulation board shall comply with the standards in Table R906.2.

TABLE R906.2
MATERIAL STANDARDS FOR ROOF INSULATION

Cellular glass board	ASTM C552
Composite boards	ASTM C1289, Type III, IV, V or VI
Expanded polystyrene	ASTM C578
Extruded polystyrene board	ASTM C578
Fiber-reinforced gypsum board	ASTM C1278
Glass-faced gypsum board	ASTM C1177
Mineral wool board	ASTM C726
Perlite board	ASTM C728
Polyisocyanurate board	ASTM C1289, Type I or II
Wood fiberboard	ASTM C208

SECTION R907
ROOFTOP-MOUNTED PHOTOVOLTAIC PANEL SYSTEMS

R907.1 Rooftop-mounted photovoltaic panel systems. Rooftop-mounted photovoltaic panel systems shall be designed and installed in accordance with Section R324 and *the California Electrical Code*.

SECTION R908
REROOFING

R908.1 General. Materials and methods of application used for re-covering or replacing an existing roof covering shall comply with the requirements of Chapter 9.

Exceptions:

1. Reroofing shall not be required to meet the minimum design slope requirement of one-quarter unit vertical in 12 units horizontal (2-percent slope) in Section R905 for roofs that provide positive roof drainage.
2. For roofs that provide positive drainage, re-covering or replacing an existing roof covering shall not require the secondary (emergency overflow) drains or scuppers of Section R903.4.1 to be added to an existing roof.

R908.2 Structural and construction loads. The structural roof components shall be capable of supporting the roof covering system and the material and equipment loads that will be encountered during installation of the roof covering system.

R908.3 Roof replacement. Roof replacement shall include the removal of existing layers of roof coverings down to the roof deck.

Exception: Where the existing roof assembly includes an ice barrier membrane that is adhered to the roof deck, the

existing ice barrier membrane shall be permitted to remain in place and covered with an additional layer of ice barrier membrane in accordance with Section R905.

R908.3.1 Roof recover. The installation of a new roof covering over an existing roof covering shall be permitted where any of the following conditions occur:

1. Where the new roof covering is installed in accordance with the roof covering manufacturer's approved instructions
2. Complete and separate roofing systems, such as standing-seam metal roof systems, that are designed to transmit the roof loads directly to the building's structural system and do not rely on existing roofs and roof coverings for support, shall not require the removal of existing roof coverings.
3. Metal panel, metal shingle and concrete and clay tile roof coverings shall be permitted to be installed over existing wood shake roofs where applied in accordance with Section R908.4.
4. The application of a new protective roof coating over an existing protective roof coating, metal roof panel, metal roof shingle, mineral surfaced roll roofing, built-up roof, modified bitumen roofing, thermoset and thermoplastic single-ply roofing and spray polyurethane foam roofing system shall be permitted without tear-off of existing roof coverings.

R908.3.1.1 Roof recover not allowed. A roof recover shall not be permitted where any of the following conditions occur:

1. Where the existing roof or roof covering is water soaked or has deteriorated to the point that the existing roof or roof covering is not adequate as a base for additional roofing.
2. Where the existing roof covering is slate, clay, cement or asbestos-cement tile.
3. Where the existing roof has two or more applications of any type of roof covering.

R908.4 Roof recovering. Where the application of a new roof covering over wood shingle or shake roofs creates a combustible concealed space, the entire existing surface shall be covered with gypsum board, mineral fiber, glass fiber or other approved materials securely fastened in place.

R908.5 Reinstallation of materials. Existing slate, clay or cement tile shall be permitted for reinstallation, except that damaged, cracked or broken slate or tile shall not be reinstalled. Any existing flashings, edgings, outlets, vents or similar devices that are a part of the assembly shall be replaced where rusted, damaged or deteriorated. Aggregate surfacing materials shall not be reinstalled.

R908.6 Flashings. Flashings shall be reconstructed in accordance with approved manufacturer's installation instructions. Metal flashing to which bituminous materials are to be adhered shall be primed prior to installation.

SECTION R918
SOLAR PHOTOVOLTAIC PANELS/MODULES

R918.1 Photovoltaic systems. *Rooftop-mounted photovoltaic shall be designed in accordance with this section.*

R918.1.2 Reserved.

R918.1.3 Fire classification. *Rooftop-mounted photovoltaic panels and modules shall have the fire classification as required by Section R902.4.*

R918.1.4 Installation. *Rooftop-mounted photovoltaic systems shall be installed in accordance with the manufacturer's installation instructions.*

R918.1.5 Photovoltaic panels and modules. *Photovoltaic panels and modules mounted on top of a roof shall be listed and labeled in accordance with UL 1703 and shall be installed in accordance with the manufacturer's installation instructions.*

R918.1.6 Fire safety provisions for photovoltaic panels/modules. *Solar photovoltaic panels/modules installed upon a roof or as an integral part of a roof assembly shall comply with the requirements of this code (see Section R224) and the California Fire Code.*

CALIFORNIA RESIDENTIAL CODE – MATRIX ADOPTION TABLE
CHAPTER 10 – CHIMNEYS AND FIREPLACES

(Matrix Adoption Tables are nonregulatory, intended only as an aid to the code user. See Chapter 1 for state agency authority and building applications.)

Adopting agency	BSC	BSC-CG	SFM	HCD			DSA			OSHPD						BSCC	DPH	AGR	DWR	CEC	CA	SL	SLC
				1	2	1/AC	AC	SS	SS/CC	1	1R	2	3	4	5								
Adopt entire chapter																							
Adopt entire chapter as amended (amended sections listed below)				X																			
Adopt only those sections that are listed below			X																				
Chapter / Section																							
R1001.3				X																			
R1001.4				X																			
Table R1001.1, Footnote (b)				X																			
R1003.3				X																			
R1003.4				X																			
R1003.9.1			X																				
R1003.11.3				X																			
R1003.14				X																			
R1004.1.1				X																			
R1004.4				†																			

CHAPTER 10

CHIMNEYS AND FIREPLACES

User note:

About this chapter: *Chapter 10 contains requirements for the construction, seismic reinforcing and anchorage of masonry chimneys and fireplaces; and establishes standards for the use and installation of factory-built chimneys, fireplaces and masonry heaters. Chimneys and fireplaces constructed of masonry rely on prescriptive requirements for the details of their construction; factory-built versions rely on the listing and labeling method of approval.*

SECTION R1001
MASONRY FIREPLACES

R1001.1 General. Masonry fireplaces shall be constructed in accordance with this section and the applicable provisions of Chapters 3 and 4.

R1001.2 Footings and foundations. Footings for masonry fireplaces and their chimneys shall be constructed of concrete or solid masonry not less than 12 inches (305 mm) thick and shall extend not less than 6 inches (152 mm) beyond the face of the fireplace or foundation wall on all sides. Footings shall be founded on natural, undisturbed earth or engineered fill below frost depth. In areas not subjected to freezing, footings shall be not less than 12 inches (305 mm) below finished grade.

R1001.2.1 Ash dump cleanout. Cleanout openings located within foundation walls below fireboxes, where provided, shall be equipped with ferrous metal or masonry doors and frames constructed to remain tightly closed except when in use. Cleanouts shall be located to allow access so that ash removal will not create a hazard to combustible materials.

R1001.3 Seismic reinforcing. Masonry or concrete chimneys in *all structures regulated by this code assigned to* Seismic Design Category *C*, D_0, D_1 or D_2 shall be reinforced. Reinforcing shall conform to the requirements set forth in Table R1001.1 and Section R606.

R1001.3.1 Vertical reinforcing. For chimneys up to 40 inches (1016 mm) wide, four No. 4 continuous vertical bars shall be placed between wythes of solid masonry or within the cells of hollow unit masonry and grouted in accordance with Section R606. Grout shall be prevented from bonding with the flue liner so that the flue liner is free to move with thermal expansion. For chimneys more than 40 inches (1016 mm) wide, two additional No. 4 vertical bars shall be provided for each additional flue incorporated into the chimney or for each additional 40 inches (1016 mm) in width or fraction thereof.

R1001.3.2 Horizontal reinforcing. Vertical reinforcement shall be placed within $^1/_4$-inch (6.4 mm) ties, or other reinforcing of equivalent net cross-sectional area, placed in the bed joints in accordance with Section R606 at not less than every 18 inches (457 mm) of vertical height. Two such ties shall be installed at each bend in the vertical bars.

R1001.4 Seismic anchorage. Masonry or concrete chimneys in *all structures regulated by this code assigned to* Seismic Design Category *C*, D_0, D_1 or D_2 shall be anchored at each floor, ceiling or roof line more than 6 feet (1829 mm) above grade, except where constructed completely within the exterior walls. Anchorage shall conform to the requirements of Section R1001.4.1.

R1001.4.1 Anchorage. Two $^3/_{16}$-inch by 1-inch (5 mm by 25 mm) straps shall be embedded not less than 12 inches (305 mm) into the chimney. Straps shall be hooked around the outer bars and extend 6 inches (152 mm) beyond the bend. Each strap shall be fastened to not less than four floor ceiling or floor joists or rafters with two $^1/_2$-inch (12.7 mm) bolts.

R1001.4.1.1 Cold-formed steel framing. Where cold-formed steel framing is used, the location where the $^1/_2$-inch (12.7 mm) bolts are used to attach the straps to the framing shall be reinforced with not less than a 3-inch × 3-inch × 0.229-inch (76 mm × 76 mm × 5.8 mm) steel plate on top of the strap that is screwed to the framing with not fewer than seven No. 6 screws for each bolt.

R1001.5 Firebox walls. Masonry fireboxes shall be constructed of solid masonry units, hollow masonry units grouted solid, stone or concrete. Where a lining of firebrick not less than 2 inches (51 mm) thick or other approved lining is provided, the minimum thickness of back and sidewalls shall each be 8 inches (203 mm) of solid masonry, including the lining. The width of joints between firebricks shall not be greater than $^1/_4$ inch (6.4 mm). Where a lining is not provided, the total minimum thickness of back and side walls shall be 10 inches (254 mm) of solid masonry. Firebrick shall conform to ASTM C27 or C1261 and shall be laid with medium-duty refractory mortar conforming to ASTM C199.

R1001.5.1 Steel fireplace units. Installation of steel fireplace units with solid masonry to form a masonry fireplace is permitted where installed either in accordance with the requirements of their listing or the requirements of this section. Steel fireplace units incorporating a steel firebox lining shall be constructed with steel not less than $^1/_4$ inch (6.4 mm) thick, and an air-circulating chamber that is ducted to the interior of the building. The firebox lining shall be encased with solid masonry to provide a total thickness at the back and sides of not less than 8 inches (203 mm), of which not less than 4 inches (102 mm) shall be of solid masonry or concrete. Circulating air ducts used with steel fireplace units shall be constructed of metal or masonry.

TABLE R1001.1
SUMMARY OF REQUIREMENTS FOR MASONRY FIREPLACES AND CHIMNEYS

ITEM	LETTER[a]	REQUIREMENTS
Hearth slab thickness	A	4″
Hearth extension (each side of opening)	B	8″ fireplace opening < 6 square feet. 12″ fireplace opening ≥ 6 square feet.
Hearth extension (front of opening)	C	16″ fireplace opening < 6 square feet. 20″ fireplace opening ≥ 6 square feet.
Hearth slab reinforcing	D	Reinforced to carry its own weight and all imposed loads.
Thickness of wall of firebox	E	10″ solid brick or 8″ where a firebrick lining is used. Joints in firebrick $^1/_4$″ maximum.
Distance from top of opening to throat	F	8″
Smoke chamber wall thickness Unlined walls	G	6″ 8″
Chimney Vertical reinforcing[b]	H	Four No. 4 full-length bars for chimney up to 40″ wide. Add two No. 4 bars for each additional 40″ or fraction of width or each additional flue.
Horizontal reinforcing	J	$^1/_4$″ ties at 18″ and two ties at each bend in vertical steel.
Bond beams	K	No specified requirements.
Fireplace lintel	L	Noncombustible material.
Chimney walls with flue lining	M	Solid masonry units or hollow masonry units grouted solid with not less than 4-inch nominal thickness.
Distances between adjacent flues	—	See Section R1003.13.
Effective flue area (based on area of fireplace opening)	P	See Section R1003.15.
Clearances Combustible material Mantel and trim Above roof	R	 See Sections R1001.11 and R1003.18. See Section R1001.11, Exception 4. 3′ at roofline and 2′ at 10′.
Anchorage[b] Strap Number Embedment into chimney Fasten to Bolts	S	 $^3/_{16}$″ × 1″ Two 12″ hooked around outer bar with 6″ extension. 4 joists Two $^1/_2$″ diameter.
Footing Thickness Width	T	 12″ min. 6″ each side of fireplace wall.

For SI: 1 inch = 25.4 mm, 1 foot = 304.8 mm, 1 square foot = 0.0929 m^2.

Note: This table provides a summary of major requirements for the construction of masonry chimneys and fireplaces. Letter references are to Figure R1001.1, which shows examples of typical construction. This table does not cover all requirements, nor does it cover all aspects of the indicated requirements. For the actual mandatory requirements of the code, see the indicated section of text.

a. The letters refer to Figure R1001.1.

b. Not required in Seismic Design Category *A or B*.

R1001.6 Firebox dimensions. The firebox of a concrete or masonry fireplace shall have a depth of not less than 20 inches (508 mm). The throat shall be not less than 8 inches (203 mm) above the fireplace opening. The throat opening shall be not less than 4 inches (102 mm) deep. The cross-sectional area of the passageway above the firebox, including the throat, damper and smoke chamber, shall be not less than the cross-sectional area of the flue.

Exception: Rumford fireplaces shall be permitted provided that the depth of the fireplace is not less than 12 inches (305 mm) and not less than one-third of the width of the fireplace opening, that the throat is not less than 12 inches (305 mm) above the lintel and is not less than one-twentieth the cross-sectional area of the fireplace opening.

R1001.7 Lintel and throat. Masonry over a fireplace opening shall be supported by a lintel of noncombustible material. The minimum required bearing length on each end of the fireplace opening shall be 4 inches (102 mm). The fireplace throat or damper shall be located not less than 8 inches (203 mm) above the lintel.

R1001.7.1 Damper. Masonry fireplaces shall be equipped with a ferrous metal damper located not less than 8 inches (203 mm) above the top of the fireplace opening. Dampers shall be installed in the fireplace or the chimney venting the fireplace, and shall be operable from the room containing the fireplace.

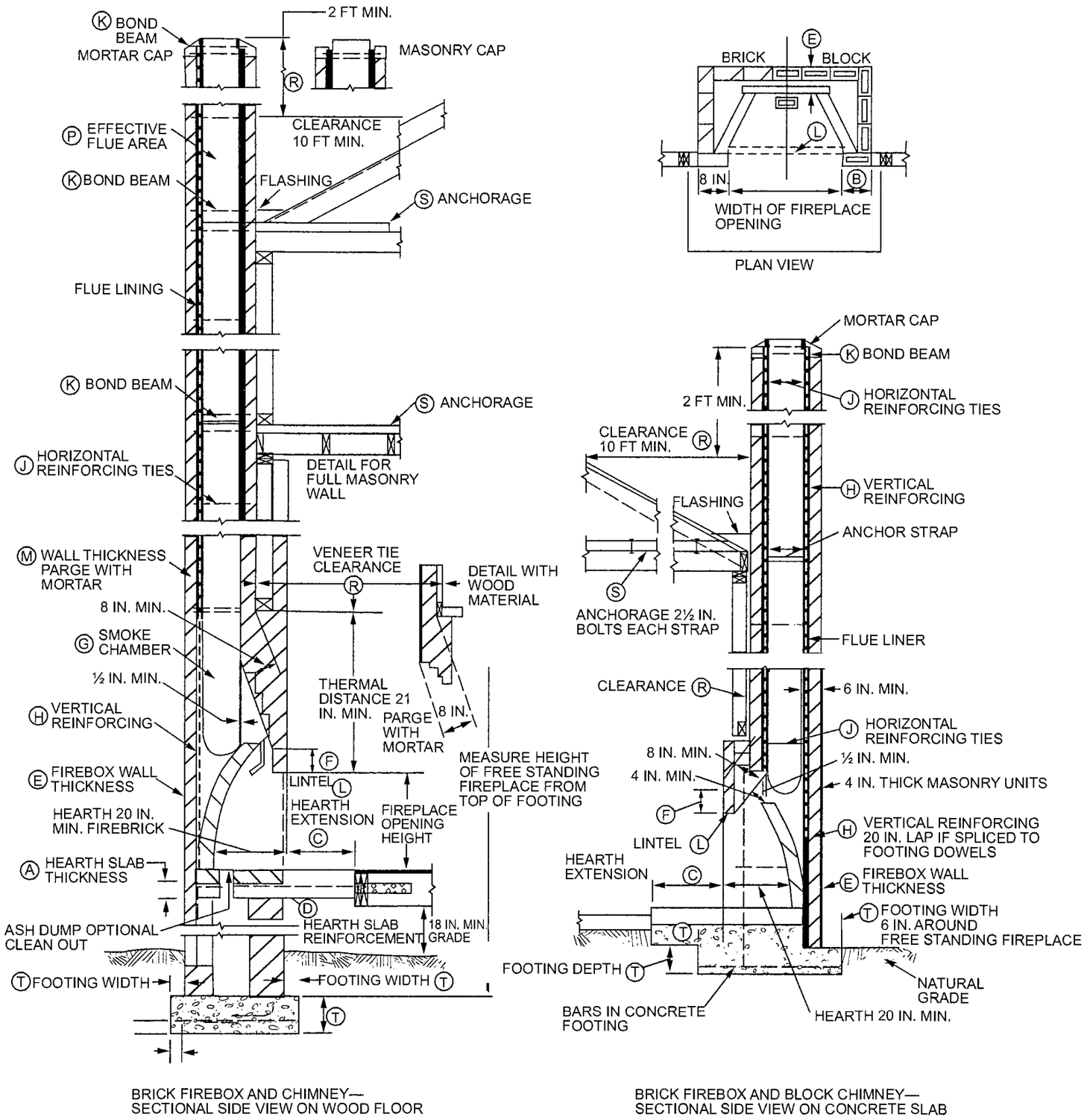

For SI: 1 inch = 25.4 mm, 1 foot = 304.8 mm.

FIGURE R1001.1
FIREPLACE AND CHIMNEY DETAILS

R1001.8 Smoke chamber. Smoke chamber walls shall be constructed of solid masonry units, hollow masonry units grouted solid, stone or concrete. The total minimum thickness of front, back and side walls shall be 8 inches (203 mm) of solid masonry. The inside surface shall be parged smooth with refractory mortar conforming to ASTM C199. Where a lining of firebrick not less than 2 inches (51 mm) thick, or a lining of vitrified clay not less than $^5/_8$ inch (16 mm) thick, is provided, the total minimum thickness of front, back and side walls shall be 6 inches (152 mm) of solid masonry, including the lining. Firebrick shall conform to ASTM C1261 and shall be laid with medium-duty refractory mortar conforming to ASTM C199. Vitrified clay linings shall conform to ASTM C315.

R1001.8.1 Smoke chamber dimensions. The inside height of the smoke chamber from the fireplace throat to the beginning of the flue shall not be greater than the inside width of the fireplace opening. The inside surface of the smoke chamber shall not be inclined more than 45 degrees (0.79 rad) from vertical where prefabricated smoke chamber linings are used or where the smoke chamber walls are rolled or sloped rather than corbeled. Where the inside surface of the smoke chamber is formed by corbeled masonry, the walls shall not be corbeled more than 30 degrees (0.52 rad) from vertical.

R1001.9 Hearth and hearth extension. Masonry fireplace hearths and hearth extensions shall be constructed of concrete or masonry, supported by noncombustible materials, and reinforced to carry their own weight and all imposed loads. Combustible material shall not remain against the underside of hearths and hearth extensions after construction.

R1001.9.1 Hearth thickness. The minimum thickness of fireplace hearths shall be 4 inches (102 mm).

R1001.9.2 Hearth extension thickness. The minimum thickness of hearth extensions shall be 2 inches (51 mm).

Exception: Where the bottom of the firebox opening is raised not less than 8 inches (203 mm) above the top of the hearth extension, a hearth extension of not less than $^3/_8$-inch-thick (10 mm) brick, concrete, stone, tile or other approved noncombustible material is permitted.

R1001.10 Hearth extension dimensions. Hearth extensions shall extend not less than 16 inches (406 mm) in front of and not less than 8 inches (203 mm) beyond each side of the fireplace opening. Where the fireplace opening is 6 square feet (0.6 m^2) or larger, the hearth extension shall extend not less than 20 inches (508 mm) in front of and not less than 12 inches (305 mm) beyond each side of the fireplace opening.

R1001.11 Fireplace clearance. Wood beams, joists, studs and other combustible material shall have a clearance of not less than 2 inches (51 mm) from the front faces and sides of masonry fireplaces and not less than 4 inches (102 mm) from the back faces of masonry fireplaces. The airspace shall not be filled, except to provide fireblocking in accordance with Section R1001.12.

Exceptions:

1. Masonry fireplaces listed and labeled for use in contact with combustibles in accordance with UL 127 and installed in accordance with the manufacturer's instructions are permitted to have combustible material in contact with their exterior surfaces.
2. Where masonry fireplaces are part of masonry or concrete walls, combustible materials shall not be in contact with the masonry or concrete walls less than 12 inches (306 mm) from the inside surface of the nearest firebox lining.

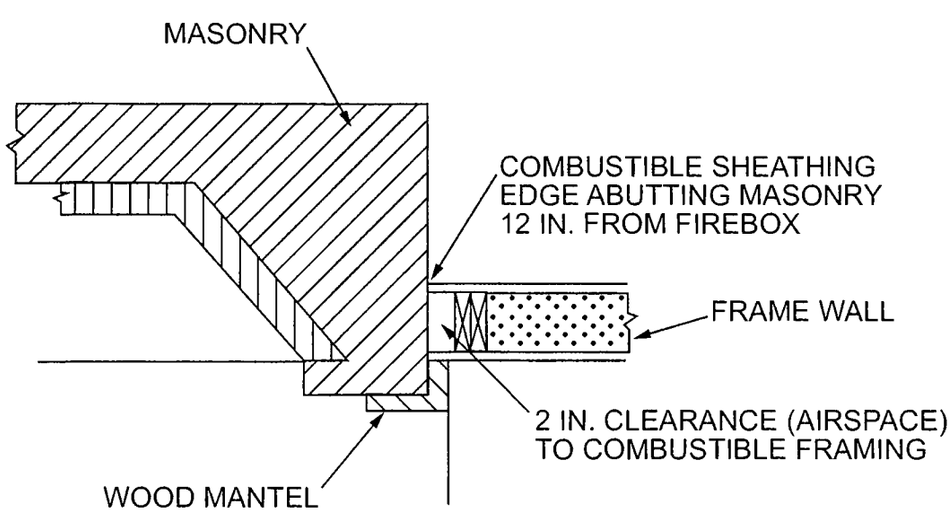

For SI: 1 inch = 25.4 mm.

FIGURE R1001.11
CLEARANCE FROM COMBUSTIBLES

3. Exposed combustible trim and the edges of sheathing materials such as wood siding, flooring and gypsum board shall be permitted to abut the masonry fireplace sidewalls and hearth extension in accordance with Figure R1001.11, provided such combustible trim or sheathing is not less than 12 inches (305 mm) from the inside surface of the nearest firebox lining.
4. Exposed combustible mantels or trim is permitted to be placed directly on the masonry fireplace front surrounding the fireplace opening providing such combustible materials are not placed within 6 inches (152 mm) of a fireplace opening. Combustible material within 12 inches (306 mm) of the fireplace opening shall not project more than $^1/_8$ inch (3 mm) for each 1-inch (25 mm) distance from such an opening.

R1001.12 Fireplace fireblocking. Fireplace fireblocking shall comply with the provisions of Section R602.8.

SECTION R1002
MASONRY HEATERS

R1002.1 Definition. A masonry heater is a heating appliance constructed of concrete or solid masonry, hereinafter referred to as masonry, that is designed to absorb and store heat from a solid-fuel fire built in the firebox by routing the exhaust gases through internal heat exchange channels in which the flow path downstream of the firebox includes flow in a horizontal or downward direction before entering the chimney and that delivers heat by radiation from the masonry surface of the heater.

R1002.2 Installation. Masonry heaters shall be installed in accordance with this section and comply with one of the following:

1. Masonry heaters shall comply with the requirements of ASTM E1602.
2. Masonry heaters shall be listed and labeled in accordance with UL 1482 or CEN 15250 and installed in accordance with the manufacturer's instructions.

R1002.3 Footings and foundation. The firebox floor of a masonry heater shall be a minimum thickness of 4 inches (102 mm) of noncombustible material and be supported on a noncombustible footing and foundation in accordance with Section R1003.2.

R1002.4 Seismic reinforcing. In Seismic Design Categories D_0, D_1 and D_2, masonry heaters shall be anchored to the masonry foundation in accordance with Section R1003.3. Seismic reinforcing shall not be required within the body of a masonry heater whose height is equal to or less than 3.5 times its body width and where the masonry chimney serving the heater is not supported by the body of the heater. Where the masonry chimney shares a common wall with the facing of the masonry heater, the chimney portion of the structure shall be reinforced in accordance with Section R1003.

R1002.5 Masonry heater clearance. Combustible materials shall not be placed within 36 inches (914 mm) of the outside surface of a masonry heater in accordance with NFPA 211 Section 8-7 (clearances for solid-fuel-burning appliances), and the required space between the heater and combustible material shall be fully vented to permit the free flow of air around all heater surfaces.

Exceptions:

1. Where the masonry heater wall is not less than 8 inches (203 mm) thick of solid masonry and the wall of the heat exchange channels is not less than 5 inches (127 mm) thick of solid masonry, combustible materials shall not be placed within 4 inches (102 mm) of the outside surface of a masonry heater. A clearance of not less than 8 inches (203 mm) shall be provided between the gas-tight capping slab of the heater and a combustible ceiling.
2. Masonry heaters listed and labeled in accordance with UL 1482 or CEN 15250 shall be installed in accordance with the listing specifications and the manufacturer's written instructions.

SECTION R1003
MASONRY CHIMNEYS

R1003.1 Definition. A masonry chimney is a chimney constructed of solid masonry units, hollow masonry units grouted solid, stone or concrete, hereinafter referred to as masonry. Masonry chimneys shall be constructed, anchored, supported and reinforced as required in this chapter.

R1003.2 Footings and foundations. Footings for masonry chimneys shall be constructed of concrete or solid masonry not less than 12 inches (305 mm) thick and shall extend not less than 6 inches (152 mm) beyond the face of the foundation or support wall on all sides. Footings shall be founded on natural undisturbed earth or engineered fill below frost depth. In areas not subjected to freezing, footings shall be not less than 12 inches (305 mm) below finished grade.

R1003.3 Seismic reinforcing. Masonry or concrete chimneys shall be constructed, anchored, supported and reinforced as required in this chapter. In *all structures regulated by this code assigned to* Seismic Design Category *C*, D_0, D_1 or D_2 masonry and concrete chimneys shall be reinforced and anchored as detailed in Sections R1003.3.1, R1003.3.2 and R1003.4. In Seismic Design Category *A or B*, reinforcement and seismic anchorage are not required.

R1003.3.1 Vertical reinforcing. For chimneys up to 40 inches (1016 mm) wide, four No. 4 continuous vertical bars, anchored in the foundation, shall be placed in the concrete, or between wythes of solid masonry, or within the cells of hollow unit masonry, and grouted in accordance with Section R608.1.1. Grout shall be prevented from bonding with the flue liner so that the flue liner is free to move with thermal expansion. For chimneys more than 40 inches (1016 mm) wide, two additional No. 4 vertical bars shall be installed for each additional 40 inches (1016 mm) in width or fraction thereof.

R1003.3.2 Horizontal reinforcing. Vertical reinforcement shall be placed enclosed within $^1/_4$-inch (6.4 mm) ties, or other reinforcing of equivalent net cross-sectional area,

spaced not to exceed 18 inches (457 mm) on center in concrete, or placed in the bed joints of unit masonry, at not less than every 18 inches (457 mm) of vertical height. Two such ties shall be installed at each bend in the vertical bars.

R1003.4 Seismic anchorage. Masonry and concrete chimneys and foundations in *all structures regulated by this code assigned to* Seismic Design Category *C*, D_0, D_1 or D_2 shall be anchored at each floor, ceiling or roof line more than 6 feet (1829 mm) above grade, except where constructed completely within the exterior walls. Anchorage shall conform to the requirements in Section R1003.4.1.

R1003.4.1 Anchorage. Two $^3/_{16}$-inch by 1-inch (5 mm by 25 mm) straps shall be embedded not less than 12 inches (305 mm) into the chimney. Straps shall be hooked around the outer bars and extend 6 inches (152 mm) beyond the bend. Each strap shall be fastened to not less than four floor joists with two $^1/_2$-inch (12.7 mm) bolts.

R1003.4.1.1 Cold-formed steel framing. Where cold-formed steel framing is used, the location where the $^1/_2$-inch (12.7 mm) bolts are used to attach the straps to the framing shall be reinforced with not less than a 3-inch × 3-inch × 0.229-inch (76 mm × 76 mm × 5.8 mm) steel plate on top of a strap that is screwed to the framing with not fewer than seven No. 6 screws for each bolt.

R1003.5 Corbeling. Masonry chimneys shall not be corbeled more than one-half of the chimney's wall thickness from a wall or foundation, nor shall a chimney be corbeled from a wall or foundation that is less than 12 inches (305 mm) thick unless it projects equally on each side of the wall, except that on the second story of a two-story dwelling, corbeling of chimneys on the exterior of the enclosing walls shall be permitted to be equal to the wall thickness. The projection of a single course shall not exceed one-half the unit height or one-third of the unit bed depth, whichever is less.

R1003.6 Changes in dimension. The chimney wall or chimney flue lining shall not change in size or shape within 6 inches (152 mm) above or below where the chimney passes through floor components, ceiling components or roof components.

R1003.7 Offsets. Where a masonry chimney is constructed with a fireclay flue liner surrounded by one wythe of masonry, the maximum offset shall be such that the centerline of the flue above the offset does not extend beyond the center of the chimney wall below the offset. Where the chimney offset is supported by masonry below the offset in an approved manner, the maximum offset limitations shall not apply. Each individual corbeled masonry course of the offset shall not exceed the projection limitations specified in Section R1003.5.

R1003.8 Additional load. Chimneys shall not support loads other than their own weight unless they are designed and constructed to support the additional load. Construction of masonry chimneys as part of the masonry walls or reinforced concrete walls of the building shall be permitted.

R1003.9 Termination. Chimneys shall extend not less than 2 feet (610 mm) higher than any portion of a building within 10 feet (3048 mm), but shall be not less than 3 feet (914 mm) above the highest point where the chimney passes through the roof.

R1003.9.1 Chimney caps. Masonry chimneys shall have a concrete, metal or stone cap, a drip edge and a caulked bond break around any flue liners in accordance with ASTM C1283. The concrete, metal or stone cap shall be sloped to shed water.

R1003.9.2 Spark arrestors. *All chimneys attached to any appliance or fireplace that burns solid fuel shall be equipped with an approved spark arrester.* Where a spark arrestor is installed on a masonry chimney, the spark arrestor shall meet all of the following requirements:

1. The net free area of the arrestor shall be not less than four times the net free area of the outlet of the chimney flue it serves.
2. The arrestor screen shall have heat and corrosion resistance equivalent to *12 gage wire,* 19-gage galvanized steel or 24-gage stainless steel.
3. Openings shall not permit the passage of spheres having a diameter greater than $^1/_2$ inch (12.7 mm) nor block the passage of spheres having a diameter less than $^3/_8$ inch (9.5 mm).
4. The spark arrestor shall be located with *access* for cleaning and the screen or chimney cap shall be removable to allow for cleaning of the chimney flue.

R1003.9.3 Rain caps. Where a masonry or metal rain cap is installed on a masonry chimney, the net free area under the cap shall be not less than four times the net free area of the outlet of the chimney flue it serves.

R1003.10 Wall thickness. Masonry chimney walls shall be constructed of solid masonry units or hollow masonry units grouted solid with not less than a 4-inch (102 mm) nominal thickness.

R1003.10.1 Masonry veneer chimneys. Where masonry is used to veneer a frame chimney, through-flashing and weep holes shall be installed as required by Section R703.

R1003.11 Flue lining (material). Masonry chimneys shall be lined. The lining material shall be appropriate for the type of appliance connected, in accordance with the terms of the appliance listing and manufacturer's instructions.

R1003.11.1 Residential-type appliances (general). Flue lining systems shall comply with one of the following:

1. Clay flue lining complying with the requirements of ASTM C315.
2. Listed and labeled chimney lining systems complying with UL 1777.
3. Factory-built chimneys or chimney units listed for installation within masonry chimneys.
4. Other approved materials that will resist corrosion, erosion, softening or cracking from flue gases and condensate at temperatures up to 1,800°F (982°C).

R1003.11.2 Flue linings for specific appliances. Flue linings other than these covered in Section R1003.11.1, intended for use with specific types of appliances, shall comply with Sections R1003.11.3 through R1003.11.6.

R1003.11.3 Gas appliances. Flue lining systems for gas appliances shall be in accordance with *the California Mechanical Code.*

R1003.11.4 Pellet fuel-burning appliances. Flue lining and vent systems for use in masonry chimneys with pellet fuel-burning appliances shall be limited to the following:

1. Flue lining systems complying with Section R1003.11.1.
2. Pellet vents listed for installation within masonry chimneys (see Section R1003.11.6 for marking).

R1003.11.5 Oil-fired appliances approved for use with Type L vent. Flue lining and vent systems for use in masonry chimneys with oil-fired appliances approved for use with Type L vent shall be limited to the following:

1. Flue lining systems complying with Section R1003.11.1.
2. Listed chimney liners complying with UL 641 (see Section R1003.11.6 for marking).

R1003.11.6 Notice of usage. Where a flue is relined with a material not complying with Section R1003.11.1, the chimney shall be plainly and permanently identified by a label attached to a wall, ceiling or other conspicuous location adjacent to where the connector enters the chimney. The label shall include the following message or equivalent language:

THIS CHIMNEY FLUE IS FOR USE ONLY WITH [TYPE OR CATEGORY OF APPLIANCE] APPLIANCES THAT BURN [TYPE OF FUEL]. DO NOT CONNECT OTHER TYPES OF APPLIANCES.

R1003.12 Clay flue lining (installation). Clay flue liners shall be installed in accordance with ASTM C1283 and extend from a point not less than 8 inches (203 mm) below the lowest inlet or, in the case of fireplaces, from the top of the smoke chamber to a point above the enclosing walls. The lining shall be carried up vertically, with a slope not greater than 30 degrees (0.52 rad) from the vertical.

Clay flue liners shall be laid in medium-duty water insoluble refractory mortar conforming to ASTM C199 with tight mortar joints left smooth on the inside and installed to maintain an airspace or insulation not to exceed the thickness of the flue liner separating the flue liners from the interior face of the chimney masonry walls. Flue liners shall be supported on all sides. Only enough mortar shall be placed to make the joint and hold the liners in position.

R1003.12.1 Listed materials. Listed materials used as flue linings shall be installed in accordance with the terms of their listings and manufacturer's instructions.

R1003.12.2 Space around lining. The space surrounding a chimney lining system or vent installed within a masonry chimney shall not be used to vent any other appliance.

Exception: This shall not prevent the installation of a separate flue lining in accordance with the manufacturer's instructions.

R1003.13 Multiple flues. Where two or more flues are located in the same chimney, masonry wythes shall be built between adjacent flue linings. The masonry wythes shall be not less than 4 inches (102 mm) thick and bonded into the walls of the chimney.

Exception: Where venting only one appliance, two flues shall be permitted to adjoin each other in the same chimney with only the flue lining separation between them. The joints of the adjacent flue linings shall be staggered not less than 4 inches (102 mm).

R1003.14 Flue area (appliance). Chimney flues shall not be smaller in area than that of the area of the connector from the appliance [see Tables R1003.14(1) and R1003.14(2)]. The sizing of a chimney flue to which multiple appliance venting systems are connected shall be in accordance with *the California Mechanical Code.*

TABLE R1003.14(1)
NET CROSS-SECTIONAL AREA OF ROUND FLUE SIZES[a]

FLUE SIZE, INSIDE DIAMETER (Inches)	CROSS-SECTIONAL AREA (square inches)
6	28
7	38
8	50
10	78
$10^3/_4$	90
12	113
15	176
18	254

For SI: 1 inch = 25.4 mm, 1 square inch = 645.16 mm^2.
a. Flue sizes are based on ASTM C315.

TABLE R1003.14(2)
NET CROSS-SECTIONAL AREA OF SQUARE AND RECTANGULAR FLUE SIZES

FLUE SIZE, OUTSIDE NOMINAL DIMENSIONS (inches)	CROSS-SECTIONAL AREA (square inches)
4.5 × 8.5	23
4.5 × 13	34
8 × 8	42
8.5 × 8.5	49
8 × 12	67
8.5 × 13	76
12 × 12	102
8.5 × 18	101
13 × 13	127
12 × 16	131
13 × 18	173
16 × 16	181
16 × 20	222
18 × 18	233
20 × 20	298
20 × 24	335
24 × 24	431

For SI: 1 inch = 25.4 mm, 1 square inch = 645.16 mm^2.

R1003.15 Flue area (masonry fireplace). Flue sizing for chimneys serving fireplaces shall be in accordance with Section R1003.15.1 or R1003.15.2.

R1003.15.1 Option 1. Round chimney flues shall have a minimum net cross-sectional area of not less than one-twelfth of the fireplace opening. Square chimney flues shall have a minimum net cross-sectional area of one-tenth of the fireplace opening. Rectangular chimney flues with an aspect ratio less than 2 to 1 shall have a minimum net cross-sectional area of one-tenth of the fireplace opening. Rectangular chimney flues with an aspect ratio of 2 to 1 or more shall have a minimum net cross-sectional area of one-eighth of the fireplace opening. Cross-sectional areas of clay flue linings are shown in Tables R1003.14(1) and R1003.14(2) or as provided by the manufacturer or as measured in the field.

R1003.15.2 Option 2. The minimum net cross-sectional area of the chimney flue shall be determined in accordance with Figure R1003.15.2. A flue size providing not less than the equivalent net cross-sectional area shall be used. Cross-sectional areas of clay flue linings arc shown in Tables R1003.14(1) and R1003.14(2) or as provided by the manufacturer or as measured in the field. The height of the chimney shall be measured from the firebox floor to the top of the chimney flue.

R1003.16 Inlet. Inlets to masonry chimneys shall enter from the side. Inlets shall have a thimble of fireclay, rigid refractory material or metal that will prevent the connector from pulling out of the inlet or from extending beyond the wall of the liner.

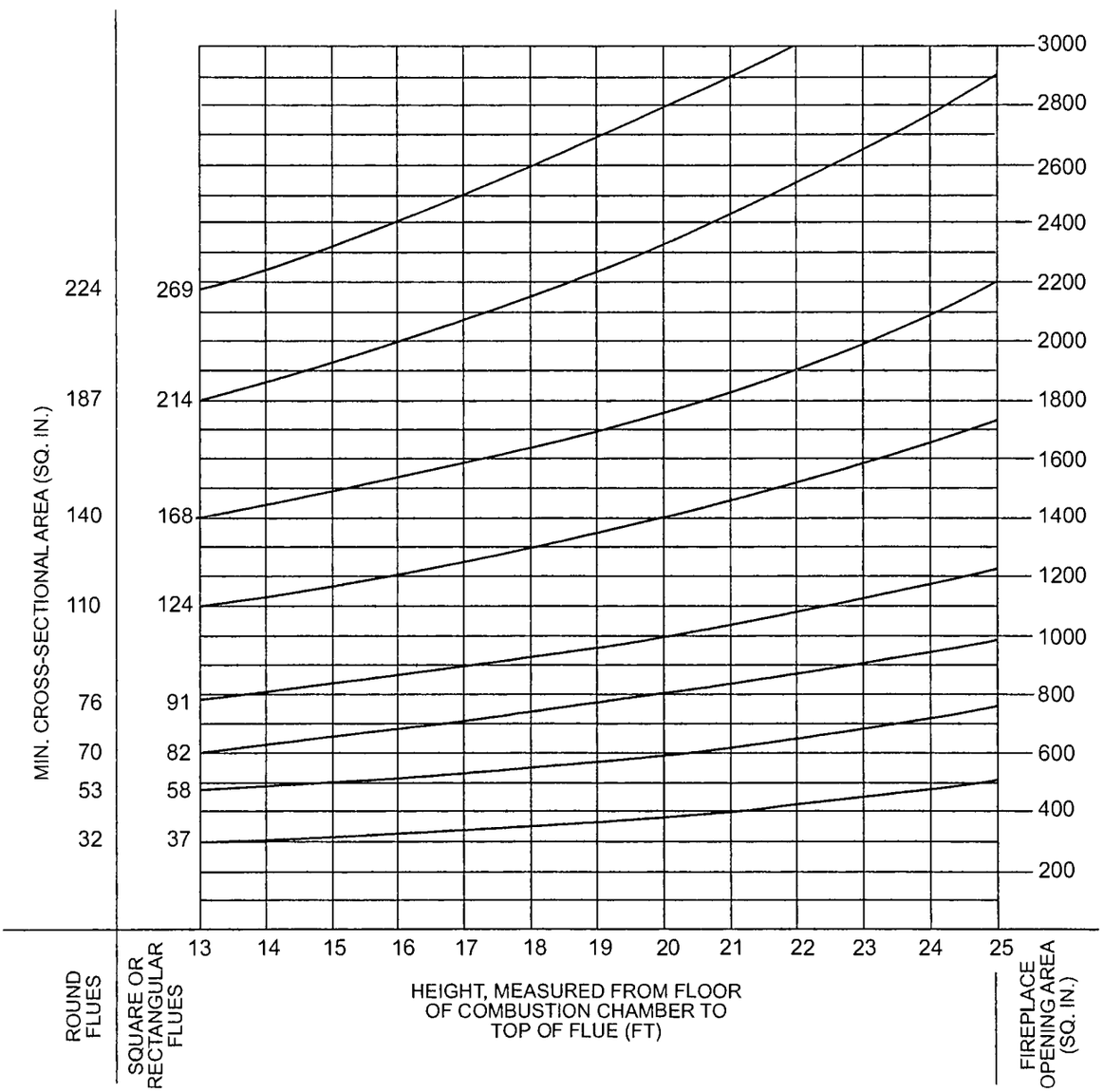

For SI: 1 foot = 304.8 mm, 1 square inch = 645.16 mm^2.

FIGURE R1003.15.2
FLUE SIZES FOR MASONRY CHIMNEYS

R1003.17 Masonry chimney cleanout openings. Cleanout openings shall be provided within 6 inches (152 mm) of the base of each flue within every masonry chimney. The upper edge of the cleanout shall be located not less than 6 inches (152 mm) below the lowest chimney inlet opening. The height of the opening shall be not less than 6 inches (152 mm). The cleanout shall be provided with a noncombustible cover.

Exception: Chimney flues serving masonry fireplaces where cleaning is possible through the fireplace opening.

R1003.18 Chimney clearances. Any portion of a masonry chimney located in the interior of the building or within the exterior wall of the building shall have a minimum airspace clearance to combustibles of 2 inches (51 mm). Chimneys located entirely outside the exterior walls of the building, including chimneys that pass through the soffit or cornice, shall have a minimum airspace clearance of 1 inch (25 mm). The airspace shall not be filled, except to provide fire blocking in accordance with Section R1003.19.

Exceptions:

1. Masonry chimneys equipped with a chimney lining system listed and labeled for use in chimneys in contact with combustibles in accordance with UL 1777 and installed in accordance with the manufacturer's instructions are permitted to have combustible material in contact with their exterior surfaces.
2. Where masonry chimneys are constructed as part of masonry or concrete walls, combustible materials shall not be in contact with the masonry or concrete wall less than 12 inches (305 mm) from the inside surface of the nearest flue lining.
3. Exposed combustible trim and the edges of sheathing materials, such as wood siding and flooring, shall be permitted to abut the masonry chimney side walls, in accordance with Figure R1003.18, provided such combustible trim or sheathing is not less than 8 inches (203 mm) from the inside surface of the nearest flue lining.

R1003.19 Chimney fireblocking. Spaces between chimneys and floors and ceilings through which chimneys pass shall be fireblocked with noncombustible material securely fastened in place. The fireblocking of spaces between chimneys and wood joists, beams or headers shall be self-supporting or be placed on strips of metal or metal lath laid across the spaces between combustible material and the chimney.

R1003.20 Chimney crickets. Chimneys shall be provided with crickets where the dimension parallel to the ridgeline is greater than 30 inches (762 mm) and does not intersect the ridgeline. The intersection of the cricket and the chimney shall be flashed and counterflashed in the same manner as normal roof-chimney intersections. Crickets shall be constructed in compliance with Figure R1003.20 and Table R1003.20.

TABLE R1003.20
CRICKET DIMENSIONS

ROOF SLOPE	H
12:12	$^1/_2$ of W
8:12	$^1/_3$ of W
6:12	$^1/_4$ of W
4:12	$^1/_6$ of W
3:12	$^1/_8$ of W

SECTION R1004
FACTORY-BUILT FIREPLACES

R1004.1 General. Factory-built fireplaces shall be listed and labeled and shall be installed in accordance with the conditions of the listing. Factory-built fireplaces shall be tested in accordance with UL 127.

R1004.1.1 Factory-built wood burning fireplaces. *Factory-built wood burning fireplaces shall be qualified at the U.S. EPA's Voluntary Fireplace Program Phase 2 emissions level and be in accordance with the California Green Building Standards Code, Chapter 4, Division 4.5.*

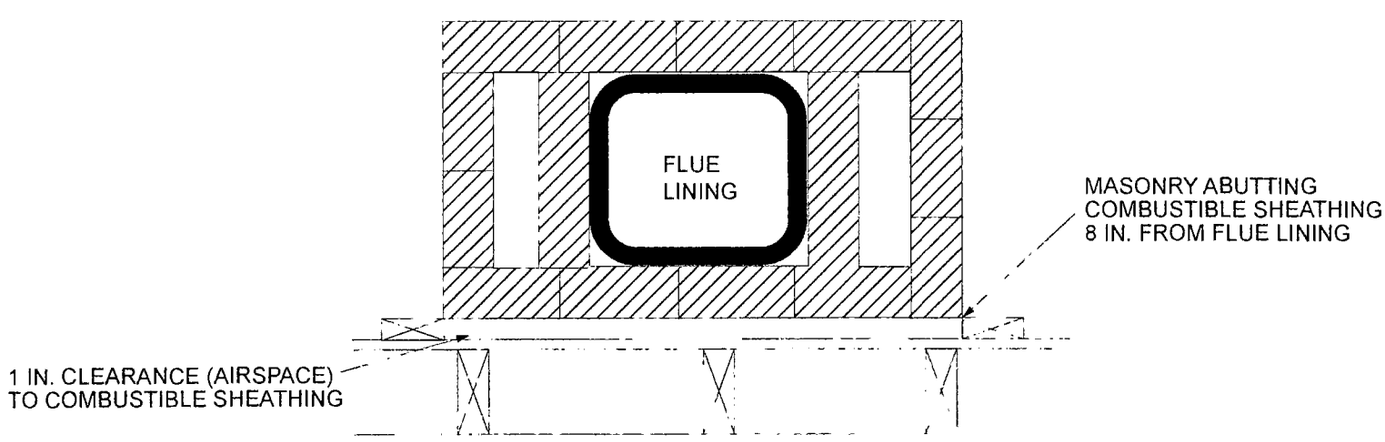

For SI: 1 inch = 25.4 mm.

FIGURE R1003.18
CLEARANCE FROM COMBUSTIBLES

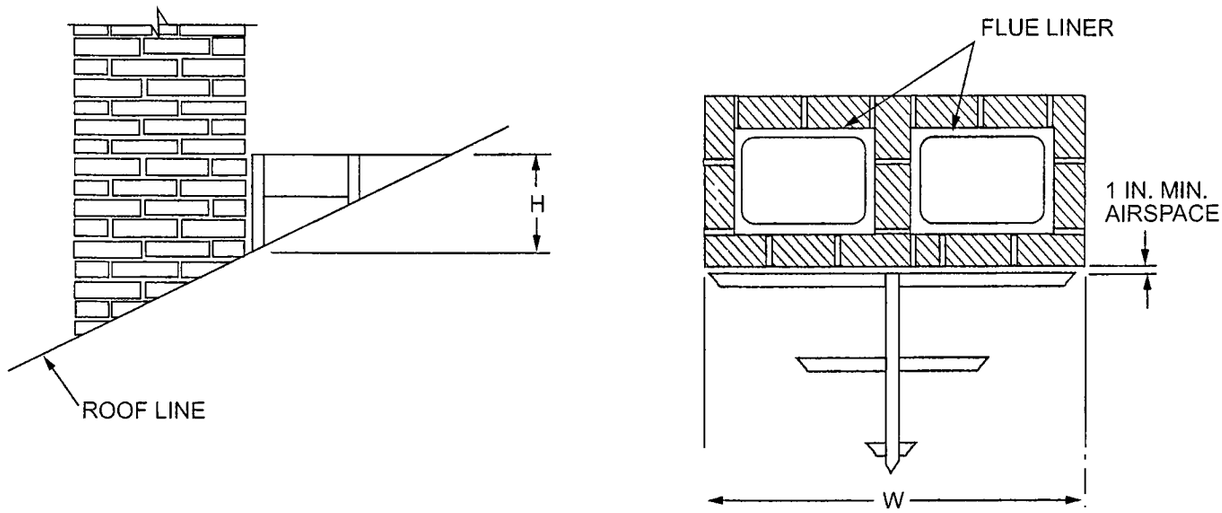

For SI: 1 inch = 25.4 mm.

FIGURE R1003.20
CHIMNEY CRICKET

R1004.2 Hearth extensions. Hearth extensions of approved factory-built fireplaces shall be installed in accordance with the listing of the fireplace. The hearth extension shall be readily distinguishable from the surrounding floor area. Listed and labeled hearth extensions shall comply with UL 1618.

R1004.3 Decorative shrouds. Decorative shrouds shall not be installed at the termination of chimneys for factory-built fireplaces except where the shrouds are listed and labeled for use with the specific factory-built fireplace system and installed in accordance with the manufacturer's instructions.

R1004.5 Gasketed fireplace doors. A gasketed fireplace door shall not be installed on a factory-built fireplace except where the fireplace system has been specifically tested, listed and labeled for such use in accordance with UL 127.

SECTION R1005
FACTORY-BUILT CHIMNEYS

R1005.1 Listing. Factory-built chimneys shall be listed and labeled and shall be installed and terminated in accordance with the manufacturer's installation instructions.

R1005.2 Decorative shrouds. Decorative shrouds shall not be installed at the termination of factory-built chimneys except where the shrouds are listed and labeled for use with the specific factory-built chimney system and installed in accordance with the manufacturer's installation instructions.

R1005.3 Solid-fuel appliances. Factory-built chimneys installed in dwelling units with solid-fuel-burning appliances shall comply with the Type HT requirements of UL 103 and shall be marked "Type HT and "Residential Type and Building Heating Appliance Chimney."

Exception: Chimneys for use with open combustion chamber fireplaces shall comply with the requirements of UL 103 and shall be marked "Residential Type and Building Heating Appliance Chimney."

Chimneys for use with open combustion chamber appliances installed in buildings other than dwelling units shall comply with the requirements of UL 103 and shall be marked "Building Heating Appliance Chimney" or "Residential Type and Building Heating Appliance Chimney."

R1005.4 Factory-built fireplaces. Chimneys for use with factory-built fireplaces shall comply with the requirements of UL 127.

R1005.5 Support. Where factory-built chimneys are supported by structural members, such as joists and rafters, those members shall be designed to support the additional load.

R1005.6 Medium-heat appliances. Factory-built chimneys for medium-heat appliances producing flue gases having a temperature above 1,000°F (538°C), measured at the entrance to the chimney, shall comply with UL 959.

R1005.7 Factory-built chimney offsets. Where a factory-built chimney assembly incorporates offsets, no part of the chimney shall be at an angle of more than 30 degrees (0.52 rad) from vertical at any point in the assembly and the chimney assembly shall not include more than four elbows.

R1005.8 Insulation shield. Where factory-built chimneys pass through insulated assemblies, an insulation shield constructed of steel having a thickness of not less than 0.0187 inch (0.4712 mm) (No. 26 gage) shall be installed to provide clearance between the chimney and the insulation material. The clearance shall be not less than the clearance to combustibles specified by the chimney manufacturer's installation instructions. Where chimneys pass through attic space, the shield shall terminate not less than 2 inches (51 mm) above the insulation materials and shall be secured in place to prevent displacement. Insulation shields provided as part of a listed chimney system shall be installed in accordance with the manufacturer's installation instructions.

SECTION R1006
EXTERIOR AIR SUPPLY

R1006.1 Exterior air. Factory-built or masonry fireplaces covered in this chapter shall be equipped with an exterior air supply to ensure proper fuel combustion unless the room is mechanically ventilated and controlled so that the indoor pressure is neutral or positive.

R1006.1.1 Factory-built fireplaces. Exterior combustion air ducts for factory-built fireplaces shall be a listed component of the fireplace and shall be installed in accordance with the fireplace manufacturer's instructions.

R1006.1.2 Masonry fireplaces. Listed combustion air ducts for masonry fireplaces shall be installed in accordance with the terms of their listing and the manufacturer's instructions.

R1006.2 Exterior air intake. The exterior air intake shall be capable of supplying all combustion air from the exterior of the dwelling or from spaces within the dwelling ventilated with outdoor air such as nonmechanically ventilated crawl or attic spaces. The exterior air intake shall not be located within the garage or basement of the dwelling. The exterior air intake, for other than listed factory-built fireplaces, shall not be located at an elevation higher than the firebox. The exterior air intake shall be covered with a corrosion-resistant screen of $^1/_4$-inch (6.4 mm) mesh.

R1006.3 Clearance. Unlisted combustion air ducts shall be installed with a minimum 1-inch (25 mm) clearance to combustibles for all parts of the duct within 5 feet (1524 mm) of the duct outlet.

R1006.4 Passageway. The combustion air passageway shall be not less than 6 square inches (3870 mm^2) and not more than 55 square inches (0.035 m^2), except that combustion air systems for listed fireplaces shall be constructed in accordance with the fireplace manufacturer's instructions.

R1006.5 Outlet. The exterior air outlet shall be located in the back or side of the firebox chamber or shall be located outside of the firebox, at the level of the hearth and not greater than 24 inches (610 mm) from the firebox opening. The outlet shall be closable and designed to prevent burning material from dropping into concealed combustible spaces.

Part IV—Energy Conservation

(Note: Part IV is not adopted. See California Energy Code, Title 24, Part 6.)

Part V—Mechanical

(Note: Part V is not adopted. See California Mechanical Code, Title 24, Part 4.)

Part VI—Fuel Gas

(Note: Part VI is not adopted. See California Mechanical Code and California Plumbing Code, Title 24, Parts 4 and 5.)

Part VII—Plumbing

(Note: Part VII is not adopted. See California Plumbing Code, Title 24, Part 5.)

Part VIII—Electrical

(Note: Part VIII is not adopted. See California Electrical Code, Title 24, Part 3.)

CALIFORNIA RESIDENTIAL CODE – MATRIX ADOPTION TABLE
CHAPTER 44 – REFERENCED STANDARDS

(Matrix Adoption Tables are nonregulatory, intended only as an aid to the code user. See Chapter 1 for state agency authority and building applications.)

Adopting agency	BSC	BSC-CG	SFM	HCD			DSA			OSHPD						BSCC	DPH	AGR	DWR	CEC	CA	SL	SLC
				1	2	1/AC	AC	SS	SS/CC	1	1R	2	3	4	5								
Adopt entire chapter																							
Adopt entire chapter as amended (amended sections listed below)			X	X																			
Adopt only those sections that are listed below			X																				
Chapter / Section																							
ANSI			X																				
ASTM			X	X																			
ICC			X																				
IFC-18				X																			
NFPA			X																				
SFM			X																				
UBC			X																				

Part IX—Referenced Standards

CHAPTER 44

REFERENCED STANDARDS

Notwithstanding California laws and regulations, these referenced standards shall be applicable only to those California Residential Code sections that are adopted.

User note:

About this chapter: *The one- and two-family dwelling code contains numerous references to standards promulgated by other organizations that are used to provide requirements for materials, products and methods of construction. Chapter 44 contains a comprehensive list of all standards that are referenced in this code. These standards, in essence, are part of this code to the extent of the reference to the standard.*

This chapter lists the standards that are referenced in various sections of this document. The standards are listed herein by the promulgating agency of the standard, the standard identification, the effective date and title, and the section or sections of this document that reference the standard. The application of the referenced standards shall be as specified in Section R102.4.

AAMA

American Architectural Manufacturers Association
1827 Walden Office Square, Suite 550
Schaumburg, IL 60173

AAMA/WDMA/CSA 101/I.S.2/A440—17: North American Fenestration Standards/Specifications for Windows, Doors and Skylights
R308.6.9, R609.3 <

450—10: Voluntary Performance Rating Method for Mulled Fenestration Assemblies
R609.8

506—16: Voluntary Specifications for Hurricane Impact and Cycle Testing of Fenestration Products
R609.6.1

711—16: Voluntary Specification for Self-adhering Flashing Used for Installation of Exterior Wall Fenestration Products
R703.4

712—14: Voluntary Specification for Mechanically Attached Flexible Flashing
R703.4

714—15: Voluntary Specification for Liquid Applied Flashing Used to Create a Water-resistive Seal around Exterior Wall Openings in Buildings
R703.4

AAMA/NPEA/NSA 2100—12: Specifications for Sunrooms
R301.2.1.1.1

ACCA

Air Conditioning Contractors of America
2800 Shirlington Road, Suite 300
Arlington, VA 22206

Manual D—2016: Residential Duct Systems
Table R301.2(1) <

<

ACI

American Concrete Institute
38800 Country Club Drive
Farmington Hills, MI 48331

318—14: Building Code Requirements for Structural Concrete
R301.2.2.2.5, R402.2, Table R404.1.2(2), Table R404.1.2(5), Table R404.1.2(6), Table R404.1.2(7), Table R404.1.2(8), R404.1.3, R404.1.3.1, R404.1.3.3, R404.1.3.4, R404.1.4.2, R404.5.1, R608.1, R608.1.1, R608.1.2, R608.2, R608.5.1, R608.6.1, R608.8.2, R608.9.2, R608.9.3

332—14: Residential Code Requirements for Structural Concrete
R402.2, R403.1, R404.1.3, R404.1.3.4, R404.1.4.2, R506.1

AISI

American Iron and Steel Institute
25 Massachusetts Avenue, NW Suite 800
Washington, DC 20001

AISI S100—16: North American Specification for the Design of Cold-formed Steel Structural Members, 2016
R608.9.2, R608.9.3

AISI S220—15: North American Standard for Cold-formed Steel Framing—Nonstructural Members, 2015
R702.3.3

AISI S230—15: Standard for Cold-formed Steel Framing—Prescriptive Method for One- and Two-family Dwellings, 2015
R301.1.1, R301.2.1.1, R301.2.2.7, R301.2.2.8, R603.6, R603.9.4.1, R603.9.4.2, R608.9.2, R608.9.3, Figure 608.9(11), R608.10

AISI S240—15: North American Standard for Cold-Formed Steel Structural Framing
R505.1.3, R603.6, R702.3.3, R804.3.6

ANSI

American National Standards Institute
25 West 43rd Street, 4th Floor
New York, NY 10036

A108.1A—16: Installation of Ceramic Tile in the Wet-set Method, with Portland Cement Mortar
R702.4.1

A108.1B—99: Installation of Ceramic Tile, Quarry Tile on a Cured Portland Cement Mortar Setting Bed with Dry-set or Latex Portland Mortar
R702.4.1

A108.4—99: Installation of Ceramic Tile with Organic Adhesives or Water-Cleanable Tile-setting Epoxy Adhesive
R702.4.1

A108.5—99: Installation of Ceramic Tile with Dry-set Portland Cement Mortar or Latex Portland Cement Mortar
R702.4.1

A108.6—99: Installation of Ceramic Tile with Chemical-resistant, Water-cleanable Tile-setting and -grouting Epoxy
R702.4.1

A108.11—99: Interior Installation of Cementitious Backer Units
R702.4.1

ANSI 117—2015: Standard Specifications for Structural Glued Laminated Timber of Softwood Species
R502.1.3, R602.1.3, R802.1.3

A118.1—16: American National Standard Specifications for Dry-set Portland Cement Mortar
R702.4.1

A118.3—13: American National Standard Specifications for Chemical-resistant, Water-cleanable Tile-setting and -grouting Epoxy, and Water-cleanahle Tile-setting Epoxy Adhesive
R702.4.1

A118.4—16: American National Standard Specifications for Modified Dry-Set Cement Mortar
R606.2.11

A136.1—08: American National Standard Specifications for Organic Adhesives for Installation of Ceramic Tile
R702.4.1

A137.1—17: American National Standard Specifications for Ceramic Tile
R702.4.1

S3.41: American National Standard Audible Evacuation Signal
R325.5.2.1

Z97.1—2014: Safety Glazing Materials Used in Buildings—Safety Performance Specifications and Methods of Test
R308.1.1, R308.3.1, Table R303.3.1(2)

APA

APA—The Engineered Wood Association
7011 South 19th
Tacoma, WA 98466

ANSI/A190.1—2017: Structural Glued-laminated Timber
R502.1.3, R602.1.3, R802.1.2

ANSI/APA PRP 210—2014: Standard for Performance-rated Engineered Wood Siding
R604.1, Table R703.3(1), R703.3.4

ANSI/APA PRG 320—2017: Standard for Performance-rated Cross Laminated Timber
R502.1.6, R602.1.6, R802.1.6

APA—continued

ANSI/APA PRR 410—2016: Standard for Performance-rated Engineered Wood Rim Boards
R502.1.7, R602.1.7, R802.1.7

ANSI/APA PRS 610.1—2013: Standard for Performance-Rated Structural Insulated Panels in Wall Applications
R602.1.11, R610.3, R610.4

APA E30—15: Engineered Wood Construction Guide
Table R503.2.1.1(1), R503.2.2, R803.2.2, R803.2.3

ASCE/SEI

American Society of Civil Engineers
Structural Engineering Institute
1801 Alexander Bell Drive
Reston, VA 20191-4400

7—16: Minimum Design Loads and Associated Criteria for Buildings and Other Structures
R301.2.1.1, R301.2.1.2, R301.2.1.2.1, R301.2.1.5, R301.2.1.5.1, Table R608.6(1), Table R608.6(2), Table R608.6(3), Table R608.6(4), Table R608.7(1A), Table R608.7(1B), Table R608.7(1C), R608.9.2, R608.9.3, R609.2, R609.6.2

24—14: Flood-resistant Design and Construction
R301.2.4, R301.2.4.1, R322.1, R322.1.1, R322.1.6, R322.1.9, R322.2.2, R322.3.3

32—17: Design and Construction of Frost-protected Shallow Foundations
R403.1.4.1

ASSE

ASSE International
18927 Hickory Creek Drive, Suite 220
Mokena, IL 60448

1051—2009: Performance Requirements for Individual and Branch-type Air Admittance Valves for Plumbing Drainage Systems
P3114.1

ASTM

ASTM International
100 Barr Harbor Drive, P.O. Box C700
West Conshohocken, PA 19428

A36/A36M—14: Specification for Carbon Structural Steel
R606.15, R608.5.2.2

A53/A53M—12: Specification for Pipe, Steel, Black and Hot-dipped, Zinc-coated Welded and Seamless
R407.3

A123/A123M—15: Standard Specification for Zinc (Hot-Dip Galvanized) Coatings on Iron and Steel Products
Table 507.2.3

A153/A153M—09: Specification for Zinc Coating (Hot Dip) on Iron and Steel Hardware
R317.3, Table 507.2.3, Table R606.3.4.1, R703.6.3, R905.7.5, R905.8.6

A167—99(2009): Specification for Stainless and Heat-resisting Chromium-nickel Steel Plate, Sheet and Strip
Table R606.3.4.1

A240/A240M—15A: Standard Specification for Chromium and Chromium-nickel Stainless Steel Plate, Sheet and Strip for Pressure Vessels and for General Applications
Table R905.10.3(1)

A307—14: Specification for Carbon Steel Bolts and Studs, 60,000 psi Tensile Strength
R608.5.2.2, Table R507.2.3

A463/A463M—15: Standard Specification for Steel Sheet, Aluminum-coated by the Hot-dip Process
Table R905.10.3(2)

A563—15: Standard Specification for Carbon and Alloy Steel Nuts
Table R507.2.3

A615/A615M—2015aE1: Specification for Deformed and Plain Carbon-steel Bars for Concrete Reinforcement
R402.3.1, R403.1.3.5.1, R404.1.3.3.7.1, R608.5.2.1

A641/A641M—09a(2014): Specification for Zinc-coated (Galvanized) Carbon Steel Wire
Table R606.3.4.1

ASTM—continued

A653/A653M—15: Specification for Steel Sheet, Zinc-coated (Galvanized) or Zinc-iron Alloy-coated (Galvannealed) by the Hot-dip Process
R317.3.1, R505.2.2, Table R507.2.3, R603.2.2, Table R606.3.4.1, R608.5.2.3, R804.2.2, R804.2.3,
> Table R905.10.3(1), Table R905.10.3(2)

A706/A706M—15: Specification for Low-alloy Steel Deformed and Plain Bars for Concrete Reinforcement
R402.3.1, R403.1.3.5.1, R404.1.3.3.7.1, R608.5.2.1

A755/A755M—2015: Specification for Steel Sheet, Metallic Coated by the Hot-dip Process and Prepainted by the Coil-coating Process for Exterior Exposed Building Products
Table R905.10.3(2)

> **A792/A792M—10(2015): Specification for Steel Sheet, 55% Aluminum-zinc Alloy-coated by the Hot-dip Process**
R505.2.2, R603.2.2, R608.5.2.3, R804.2.2, Table 905.10.3(2)

A875/A875M—13: Specification for Steel Sheet, Zinc-5%, Aluminum Alloy-coated by the Hot-dip Process
R608.5.2.3, Table R905.10.3(2)

> **A924/A924M—14: Standard Specification for General Requirements for Steel Sheet, Metallic-coated by the Hot-dip Process**
Table R905.10.3(1)

A996/A996M—15: Specifications for Rail-steel and Axle-steel Deformed Bars for Concrete Reinforcement
R403.1.3.5.1, R403.2.1, Table R404.1.2(9), R404.1.3.3.7.1, R608.5.2.1, Table R608.5.4(2)

A1003/A1003M—15: Standard Specification for Steel Sheet, Carbon, Metallic and Nonmetallic-coated for Cold-formed Framing Members
R505.2.1, R505.2.2, R603.2.1, R603.2.2, R804.2.1, R804.2.2

> **B101—12: Specification for Lead-coated Copper Sheet and Strip for Building Construction**
Table R905.2.8.2, Table R905.10.3(1)

> **B209—14: Specification for Aluminum and Aluminum-alloy Sheet and Plate**
Table 905.10.3(1)

>

B370—12: Specification for Copper Sheet and Strip for Building Construction
Table R905.2.8.2, Table R905.10.3(1)

B695—04(2009): Standard Specification for Coatings of Zinc Mechanically Deposited on Iron and Steel
R317.3.1, R317.3.3, Table R905.10.(3).2.3

> **C5—10: Specification for Quicklime for Structural Purposes**
R702.2.1

> **C22/C22M—2015: Specification for Gypsum**
R702.2.1, R702.3.1

C27—98(2013): Specification for Standard Classification of Fireclay and High-alumina Refractory Brick
R1001.5

C28/C28M—10(2015): Specification for Gypsum Plasters
R702.2.1

C33/C33M—13: Specification for Concrete Aggregates
R403.4.1

C34—13; Specification for Structural Clay Load-bearing Wall Tile
Table R301.2(1), R606.2.2

C35/C35M—(2014): Specification for Inorganic Aggregates for Use in Gypsum Plaster
R702.2.1

C55—2014A: Specification for Concrete Building Brick
R202, Table R301.2(1), R606.2.1

C56—13: Standard Specification for Structural Clay Nonloadbearing Tile
R606.2.2

C59/C59M—00(2015): Specification for Gypsum Casting Plaster and Molding Plaster
R702.2.1

C61/C61M—00(2015): Specification for Gypsum Keene's Cement
R702.2.1

C62—13A: Standard Specification for Building Brick (Solid Masonry Units Made from Clay or Shale)
R202, Table R301.2(1), R606.2.2

C73—14: Specification for Calcium Silicate Face Brick (Sand Lime Brick)
R202, Table R301.2(1), R606.2.1

> **C90—14: Specification for Load-bearing Concrete Masonry Units**
Table R301.2(1), 606.2.1

ASTM—continued

C91/C91M—12: Specification for Masonry Cement
R702.2.2, R703.7.2

C94/C94M—15A: Standard Specification for Ready-mixed Concrete
R404.1.3.3.2, R608.5.1.2

C126—15: Standard Specification for Ceramic Glazed Structural Clay Facing Tile, Facing Brick, and Solid Masonry Units
R606.2.2

C129—14A: Specification for Nonload-bearing Concrete Masonry Units
Table R301.2(1)

C143/C143M—15: Test Method for Slump of Hydraulic Cement Concrete
R404.1.3.3.4, R608.5.1.4

C145—85: Specification for Solid Load-bearing Concrete Masonry Units
R202, Table R301.2(1)

C150/C150M—15: Specification for Portland Cement
R608.5.1.1, R702.7.2

C199—84(2011): Test Method for Pier Test for Refractory Mortar
R1001.5, R1001.8, R1003.12

C203—05a(2012): Standard Test Methods for Breaking Load and Flexural Properties of Block-type Thermal Insulation
Table R610.3.1

C207—06(2011): Specification for Hydrated Lime for Masonry Purposes
Table R606.2.8

C208—12: Specification for Cellulosic Fiber Insulating Board
R602.1.10, Table R602.3(1), Table R906.2

C212—14: Standard Specification for Structural Clay Facing Tile
R602.2.2

C216—15: Specification for Facing Brick (Solid Masonry Units Made from Clay or Shale)
R202, Table R301.2(1), R606.2.2

C270—14A: Specification for Mortar for Unit Masonry
R606.2.8, Table R606.2.8, R606.2.11

C315—07(2011): Specification for Clay Flue Liners and Chimney Pots
R1001.8, R1003.11.1, Table 1003.14(1)

C406/C406M—2015: Specifications for Roofing Slate
R905.6.4

C475/C475M—15: Specification for Joint Compound and Joint Tape for Finishing Gypsum Wallboard
R702.3.1

C476—10: Specification for Grout for Masonry
R606.2.12

C503/C503M—2010: Standard Specification for Marble Dimension Stone
R606.2.4

C514—04(2014): Specification for Nails for the Application of Gypsum Wallboard
R702.3.1

C552—15: Standard Specification for Cellular Glass Thermal Insulation
Table R906.2

C557—03(2009)e01: Specification for Adhesives for Fastening Gypsum Wallboard to Wood Framing
R702.3.1.1

C568/C568M—2010: Standard Specification for Limestone Dimension Stone
R606.2.4

C578—15: Specification for Rigid, Cellular Polystyrene Thermal Insulation
R316.8, R403.3, Table 703.8.4(2), Table R703.15.1, Table R703.15.2, Table R703.16.1, Table R703.16.2, Table R906.2

C587—04(2014): Specification for Gypsum Veneer Plaster
R702.2.1

C595/C595M—14E1: Specification for Blended Hydraulic Cements
R608.5.1.1, R702.2.2, R703.7.2

C615/C615M—11: Standard Specification for Granite Dimension Stone
R606.2.4

ASTM—continued

C616/C616M—10: Standard Specification for Quartz-based Dimension Stone
R606.2.4

C629/C629M—10: Standard Specification for Slate Dimension Stone
R606.2.4

C631—09(2014): Specification for Bonding Compounds for Interior Gypsum Plastering
R702.2.1

C645—14: Specification for Nonstructural Steel Framing Members
R702.3.3

C652—15: Specification for Hollow Brick (Hollow Masonry Units Made from Clay or Shale)
R202, Table R301.2(1), R606.2.2

C685/C685M—14: Specification for Concrete Made by Volumetric Batching and Continuous Mixing
R404.1.3.3.2, R608.5.1.2

C726—12: Standard Specification for Mineral Wool Roof Insulation Board
Table R906.2

C728—15: Standard Specification for Perlite Thermal Insulation Board
Table R906.2

C744—14: Standard Specification for Prefaced Concrete and Calcium Silicate Masonry Units
R606.2.1

C836/C836M—15: Specification for High Solids Content, Cold Liquid-applied Elastomeric Waterproofing Membrane for Use with Separate Wearing Course
R905.15.2

C841—03(2013): Standard Specification for Installation of Interior Lathing and Furring
R702.2.1

C842—05(2015): Standard Specification for Application of Interior Gypsum Plaster
R702.2.1

C843—99(2012): Specification for Application of Gypsum Veneer Plaster
R702.2.1

C844—2015: Specification for Application of Gypsum Base to Receive Gypsum Veneer Plaster
R702.2.1

C847—14A: Specification for Metal Lath
R702.2.1, R702.2.2

C887—13: Specification for Packaged, Dry, Combined Materials for Surface Bonding Mortar
R406.1, R606.2.9

C897—15: Specification for Aggregate for Job-mixed Portland Cement-based Plasters
R702.2.2

C920—14A: Standard Specification for Elastomeric Joint Sealants
R406.4.1

C926—15B: Specification for Application of Portland Cement-based Plaster
R702.2.2, R702.2.2.1, R703.7, R703.7.2, R703.7.2.1, R703.7.4

C933—14: Specification for Welded Wire Lath
R702.2.1, R702.2.2

C946—10: Standard Practice for Construction of Dry-Stacked, Surface-Bonded Walls
R606.2.9

C954—15: Specification for Steel Drill Screws for the Application of Gypsum Panel Products or Metal Plaster Bases to Steel Studs from 0.033 in (0.84 mm) or to 0.112 in. (2.84 mm) in Thickness
R505.2.5, R603.2.5, R702.3.5.1, R804.2.5

C957/C957M—15: Specification for High-solids Content, Cold Liquid-applied Elastomeric Waterproofing Membrane for Use with Integral Wearing Surface
R905.15.2

C1002—14: Specification for Steel Self-piercing Tapping Screws for the Application of Gypsum Panel Products or Metal Plaster Bases to Wood Studs or Steel Studs
R702.3.1, R702.3.5.1

C1029—15: Specification for Spray-applied Rigid Cellular Polyurethane Thermal Insulation
R905.14.2

ASTM—continued

C1032—14: Specification for Woven Wire Plaster Base
R702.2.1, R702.2.2

C1047—14a: Specification for Accessories for Gypsum Wallboard and Gypsum Veneer Base
R702.2.1, R702.2.2, R702.3.1

C1063—15A: Specification for Installation of Lathing and Furring to Receive Interior and Exterior Portland Cement-based Plaster
R702.2.2, R703.7, R703.7.1

C1088—14: Standard Specification for Thin Veneer Brick Units Made from Clay or Shale
R606.2.2

C1107/C1107M—14A: Standard Specification for Packaged Dry, Hydraulic-cement Grout (Nonshrink)
R402.3.1

C1116/C116M—10(2015): Standard Specification for Fiber-reinforced Concrete and Shotcrete
R402.3.1

C1157—11/C1157M—11: Standard Performance Specification for Hydraulic Cement
R608.5.1.1, R703.7.2

C1167—11: Specification for Clay Roof Tiles
R905.3.4

C1177/C1177M—13: Specification for Glass Mat Gypsum Substrate for Use as Sheathing <
R702.3.1, Table 906.2

C1178/C1178M—13: Specification for Glass Mat Water-resistant Gypsum Backing Panel
R702.3.1, R702.3.7, Table R702.4.2

C1186—08(2012): Specification for Flat Fiber Cement Sheets
R703.10.1, R703.10.2

C1261—13: Specification for Firebox Brick for Residential Fireplaces
R1001.5, R1001.8

C1278/C1278M—07a(2011): Specification for Fiber-reinforced Gypsum Panels <
R702.3.1, R702.3.7, Table R702.4.2, Table R906.2

C1283—11: Practice for Installing Clay Flue Lining
R1003.9.1, R1003.12

C1288—14: Standard Specification for Discrete Nonasbestos Fiber-cement Interior Substrate Sheets
Table R503.2.1.1(1), Table R503.2.1.1(2), Table 602.3(2), Table R702.4.2

C1289—15: Standard Specification for Faced Rigid Cellular Polyisocyanurate Thermal Insulation Board
R316.8, Table R703.15.1, Table R703.15.2, Table R703.16.1, Table R703.16.2, R708.8.4(2), Table R906.2

C1325—14: Standard Specification for Nonasbestos Fiber-mat Reinforced Cement Interior Substrate Sheets Backer Units
Table R702.4.2

C1328/C1328M—12: Specification for Plastic (Stucco) Cement
R702.2.2, R703.7.2

C1364—10B: Standard Specification for Architectural Cast Stone <
R606.2.5

C1396/C1396M—2014A: Specification for Gypsum Board
Table R602.3(1), R702.2.1, R702.2.2, R702.3.1, R702.3.7

C1405—15: Standard Specification for Glazed Brick (Single Fired, Brick Units)
R606.2.2

C1492—03(2009): Specification for Concrete Roof Tile <
R905.3.5

C1513—201: Standard Specification for Steel Tapping Screws for Cold-formed Steel Framing Connections
R505.2.5, R603.2.5, R702.3.5.1, Table R703.3(2), Table R703.16.1, Table R703.16.2, R804.2.5

C1634—15: Standard Specification for Concrete Facing Brick <
R606.2.1

C1658/C1658M—13: Standard Specification for Glass Mat Gypsum Panels
R702.3.1

C1670/1670M—16: Standard Specification for Adhered Manufactured Stone Masonry Veneer Units <
R606.2.6

C1691—11: Standard Specification for Unreinforced Autoclaved Aerated Concrete (AAC) Masonry Units
R606.2.3

ASTM—continued

C1693—11: Standard Specification for Autoclaved Aerated Concrete (AAC)
R606.2.3

C1766—13: Standard Specification for Factory-Laminated Gypsum Panel Products
R702.3.1

D41/D41M—2011: Specification for Asphalt Primer Used in Roofing, Dampproofing and Waterproofing
Table R905.9.2, Table R905.11.2

D43/D43M—2000(2012)E1: Specification for Coal Tar Primer Used in Roofing, Dampproofing and Waterproofing
Table R905.9.2

D226/D226M—09: Specification for Asphalt-saturated (Organic Felt) Used in Roofing and Waterproofing
R703.2, R905.1.1, Table R905.1.1(1), R905.8.4, Table R905.9.2

D227/D227M—03(2011)e1: Specification for Coal Tar Saturated (Organic Felt) Used in Roofing and Waterproofing
Table R905.9.2

D312/D321M—15: Specification for Asphalt Used in Roofing
Table R905.9.2

D422—63(2007)E2: Test Method for Particle-size Analysis of Soils
R403.1.8.1

D449/D449M—03(2014)E1: Specification for Asphalt Used in Dampproofing and Waterproofing
R406.2

D450/D450M—07(2013)E1: Specification for Coal-tar Pitch Used in Roofing, Dampproofing and Waterproofing
Table R905.9.2

D1227—13: Specification for Emulsified Asphalt Used as a Protective Coating for Roofing
Table R905.9.2, Table R905.11.2, R905.15.2

> **D1863/D1863M—05(2011)e1: Specification for Mineral Aggregate Used in Built-up Roofs**
Table R905.9.2

> **D1970/D1970M—2015A: Specification for Self-adhering Polymer Modified Bitumen Sheet Materials Used as Steep Roofing Underlayment for Ice Dam Protection**
R905.1.1, R905.2.8.2, R905.11.2.1

> **D2178/D2178M—15: Specification for Asphalt Glass Felt Used in Roofing and Waterproofing**
Table R905.9.2

> **D2626/D2626M—04 (2012)e1: Specification for Asphalt-saturated and Coated Organic Felt Base Sheet Used in Roofing**
Table R905.1.1(1), Table R905.9.2

> **D2822/D2822M—05(2011)e1: Specification for Asphalt Roof Cement, Asbestos Containing**
Table R905.9.2

D2823/D2823M—05(2011)e1: Specification for Asphalt Roof Coatings, Asbestos Containing
Table R905.9.2

D2824/D2824M—2013: Specification for Aluminum-pigmented Asphalt Roof Coatings, Nonfibered, Asbestos Fibered and Fibered without Asbestos
Table R905.9.2, Table R905.11.2

> **D2898—10: Test Methods for Accelerated Weathering of Fire-retardant-treated Wood for Fire Testing**
R802.1.5.4, R802.1.5.8

> **D3019—08: Specification for Lap Cement Used with Asphalt Roll Roofing, Nonfibered, Asbestos Fibered and Nonasbestos Fibered**
Table R905.9.2, Table R905.11.2

> **D3161/D3161M—15: Test Method for Wind-Resistance of Steep Slope Roofing Products (Fan Induced Method)**
R905.2.4.1, Table R905.2.4.1, R905.16.6

D3201/D3201M—2013: Test Method for Hygroscopic Properties of Fire-retardant Wood and Wood-base Products
R802.1.5.9

> **D3462/D3462M—10A: Specification for Asphalt Shingles Made From Glass Felt and Surfaced with Mineral Granules**
R905.2.4

D3468/D3468M—99(2013)E1: Specification for Liquid-applied Neoprene and Chlorosulfanated Polyethylene Used in Roofing and Waterproofing
R905.15.2

D3679—13: Specification for Rigid Poly (Vinyl Chloride) (PVC) Siding
R703.11

ASTM—continued

D3737—2012: Practice for Establishing Allowable Properties for Structural Glued Laminated Timber (Glulam)
R502.1.3, R602.1.3, R802.1.2

D3747—79(2007): Specification for Emulsified Asphalt Adhesive for Adhering Roof Insulation
Table R905.9.2, Table R905.11.2

D3909/D3909M—14: Specification for Asphalt Roll Roofing (Glass Felt) Surfaced with Mineral Granules
R905.2.8.2, R905.5.4, Table R905.9.2

D4022/D4022M—2007(2012)e1: Specification for Coal Tar Roof Cement, Asbestos Containing
Table R905.9.2

D4318—10E1: Test Methods for Liquid Limit, Plastic Limit and Plasticity Index of Soils
R403.1.8.1

D4434/D4434M—12: Specification for Poly (Vinyl Chloride) Sheet Roofing
R905.13.2

D4479/D4479M—07(2012)e1: Specification for Asphalt Roof Coatings—asbestos-free
Table R905.9.2

D4586/D4586M—07(2012)e1: Specification for Asphalt Roof Cemen—asbestos-free
Table R905.9.2

D4601/D4601M—04(2012)e1: Specification for Asphalt-coated Glass Fiber Base Sheet Used in Roofing
Table R905.9.2, R905.11.2.1

D4637/D4637M—14E1: Specification for EPDM Sheet Used in Single-ply Roof Membrane
R905.12.2

D4829—11: Test Method for Expansion Index of Soils
R403.1.8.1

D4869/D4869M—15: Specification for Asphalt-saturated (Organic Felt) Underlayment Used in Steep Slope Roofing
R905.1.1, Table R905.1.1(1)

D4897/D4897M—01(2009): Specification for Asphalt Coated Glass-fiber Venting Base Sheet Used in Roofing
Table R905.9.2

D4990—1997a(2013): Specification for Coal Tar Glass Felt Used in Roofing and Waterproofing
Table R905.9.2

D5019—07a: Specification for Reinforced Nonvulcanized Polymeric Sheet Used in Roofing Membrane
R905.12.2

D5055—13E1: Specification for Establishing and Monitoring Structural Capacities of Prefabricated Wood I-joists
R502.1.2, R802.1.8

D5456—14B: Standard Specification for Evaluation of Structural Composite Lumber Products
R502.1.5, R602.1.5, R802.1.4

D5516—09: Test Method for Evaluating the Flexural Properties of Fire-retardant-treated Softwood Plywood Exposed to the Elevated Temperatures
R802.1.5.6

D5643/D5643M—06(2012)e1: Specification for Coal Tar Roof Cement Asbestos-free
Table R905.9.2

D5664—10: Test Methods For Evaluating the Effects of Fire-retardant Treatments and Elevated Temperatures on Strength Properties of Fire-retardant-treated Lumber
R802.1.5.7

D5665/D5665M—99a(2014)E1: Specification for Thermoplastic Fabrics Used in Cold-applied Roofing and Waterproofing
Table R905.9.2

D5726—98(2013): Specification for Thermoplastic Fabrics Used in Hot-applied Roofing and Waterproofing
Table R905.9.2

D6083—05e01: Specification for Liquid-applied Acrylic Coating Used in Roofing
Table R905.9.2, Table R905.11.2, Table R905.14.3, R905.15.2

D6162/D6162M—2000a(2015)E1: Specification for Styrene Butadiene Styrene (SBS) Modified Bituminous Sheet Materials Using a Combination of Polyester and Glass Fiber Reinforcements
Table R905.11.2

D6163/D6163M—2000(2015)E1: Specification for Styrene Butadiene Styrene (SBS) Modified Bituminous Sheet Materials Using Glass Fiber Reinforcements
Table R905.11.2

ASTM—continued

D6164/D6164M—11: Specification for Styrene Butadiene Styrene (SBS) Modified Bituminous Sheet Materials Using Polyester Reinforcements
Table R905.11.2

D6222/D6222M—11: Specification for Atactic Polypropylene (APP) Modified Bituminous Sheet Materials Using Polyester Reinforcements
Table R905.11.2

D6223/D6223M—02(2009)E1: Specification for Atactic Polypropylene (APP) Modified Bituminous Sheet Materials Using a Combination of Polyester and Glass Fiber Reinforcement
Table R905.11.2

D6298—13: Specification for Fiberglass-reinforced Styrene Butadiene Styrene (SBS) Modified Bituminous Sheets with a Factory Applied Metal Surface
Table R905.11.2

D6305—08(2015)E1: Practice for Calculating Bending Strength Design Adjustment Factors for Fire-retardant-treated Plywood Roof Sheathing
R802.1.5.6

D6380/D6380—03(2013)E1: Standard Specification for Asphalt Roll Roofing (Organic Felt)
Table R905.1.1(1), R905.2.8.2, R905.5.4

D6464—03a(2009)e1: Standard Specification for Expandable Foam Adhesives for Fastening Gypsum Wallboard to Wood Framing
R702.3.1.1

D6694/D6694M—08(2013)E1: Standard Specification for Liquid-applied Silicone Coating Used in Spray Polyurethane Foam Roofing Systems
Table R905.14.3, R905.15.2

D6754/D6754M—10: Standard Specification for Ketone-ethylene-ester-based Sheet Roofing
R905.13.2

D6757—2013: Specification for Underlayment Felt Containing Inorganic Fibers Used with Steep Slope Roofing
Table R905.1.1(1), R905.1.1

D6841—08: Standard Practice for Calculating Design Value Treatment Adjustment Factors for Fire-retardant-treated Lumber
R802.1.5.7

D6878/D6878M—13: Standard Specification for Thermoplastic-polyolefin-based Sheet Roofing
R905.13.2

D6947/D6947M—07(2013)E1: Standard Specification for Liquid Applied Moisture Cured Polyurethane Coating Used in Spray Polyurethane Foam Roofing System
Table R905.14.3, R905.15.2

D7032—14: Standard Specification for Establishing Performance Ratings for Wood-plastic Composite Deck Boards and Guardrail Systems (Guards or Handrails)
R507.2.2, R507.2.2.1, 507.2.2.3, 507.2.2.4

D7158—D7158M—2016: Standard Test Method for Wind Resistance of Asphalt Shingles (Uplift Force/Uplift Resistance Method)
R905.2.4.1, Table R905.2.4.1

D7254—15: Standard Specification for Polypropylene (PP) siding
Table R703.3(1), R703.14

D7425/D7425M—13: Standard Specification for Spray Polyurethane Foam Used for Roofing Application
R905.14.2

D7672—14: Standard Specification for Evaluating Structural Capacities of Rim Board Products and Assemblies
R502.1.7, R602.1.7, R802.1.7

D7793—13: Standard Specification for Insulated Vinyl Siding
R703.13, Table R703.3(1)

E84—2016: Standard Test Method for Surface Burning Characteristics of Building Materials
R202, R302.9.3, R302.9.4, R302.10.1, R302.10.2, R316.3, R316.5.9, R316.5.11, R507.2.2.2,
> R703.14.3, R802.1.5

E96/E96M—2015: Test Method for Water Vapor Transmission of Materials
> R202, Table R806.5

E108—2016: Test Methods for Fire Tests of Roof Coverings
R302.2.4, R902.1

E119—2016: Test Methods for Fire Tests of Building Construction and Materials
Table R302.1(1), Table R302.1(2), R302.2.1, R302.2.2, R302.3, R302.4.1, R302.11.1, R606.2.2

ASTM—continued

E136—2016: Test Method for Behavior of Materials in a Vertical Tube Furnace at 750°C
R202, R302.11

E283—04(2012): Test Method for Determining the Rate of Air Leakage through Exterior Windows, Curtain Walls and Doors under Specified Pressure Differences Across the Specimen
R202

E330/E330M—14: Test Method for Structural Performance of Exterior Windows, Curtain Walls and Doors by Uniform Static Air Pressure Difference
R609.4, R609.5, R609.6.2, R703.1.2

E331—00(2009): Test Method for Water Penetration of Exterior Windows, Skylights, Doors and Curtain Walls by Uniform Static Air Pressure Difference
R703.1.1

E814—2013A: Standard Test Method for Fire Tests of Penetration Firestop Systems
R302.4.1.2

E970—14: Standard Test Method for Critical Radiant Flux of Exposed Attic Floor Insulation Using a Radiant Heat Energy Source
R302.10.5

E1602—03(2010)e1: Guide for Construction of Solid Fuel Burning Masonry Heaters
R1002.2

E1886—13A: Test Method for Performance Impact Protective Systems Impacted by Missile(s) and Exposed to Cyclic Pressure Differentials
R301.2.1.2, R609.6.1, R609.6.2, Table R703.11.2

E1996—2014a: Standard Specification for Performance of Exterior Windows, Curtain Walls, Doors and Impact Protective Systems Impacted by Windborne Debris in Hurricanes
R301.2.1.2, R301.2.1.2.1, R609.6.1, R609.6.2

E2178—2013: Standard Test Method for Air Permeance of Building Materials
R202

E2273—03(2011): Standard Test Method for Determining the Drainage Efficiency of Exterior Insulation and Finish Systems (EIFS) Clad Wall Assemblies
R703.9.2

E2568—09e1: Standard Specification for PB Exterior Insulation and Finish Systems
R703.9.1, R703.9.2

E2570/E2570M—07(2014)E1: Standard Test Methods for Evaluating Water-resistive Barrier (WRB) Coatings Used Under Exterior Insulation and Finish Systems (EIFS) or EIFS with Drainage
R703.9.2

E2632/E2632M—2013e1: Standard Test Method for Evaluating the Under-Deck Fire Test Response of Deck Materials:
R337.9.3, R337.9.4, R337.9.4.1, R337.9.5

E2634—11(2015): Standard Specification for Flat Wall Insulating Concrete Form (ICF) Systems
R404.1.3.3.6.1, R608.4.4

E2707—2015: Standard Test Method for Determining Fire Penetration of Exterior Wall Assemblies Using a Direct Flame Impingement Exposure
R337.7.3, R337.7.3.1, R337.8.3

E2726/E2726M—2012a: Standard Test Method for Evaluating the Fire-Test-Response of Deck Structures to Burning Brands
R337.9.3, R337.9.4, R337.9.4.2

E2886/E2886M—2014: Standard Test Method for Evaluating the Ability of Exterior Vents to Resist the Entry of Embers and Direct Flame Impingent
R337.6.2, R337.6.3

ASTM E2886, Amended Sections as follows:

Revise Sections 10.1.8.3, 10.1.8.4, and 10.1.8.5 as follows:

10.1.8.3 *Report the temperatures of the unexposed temperatures on the unexposed side of the vent during the entire optional Insulation Test of the Flame Intrusion.*

10.1.8.4 *The maximum temperature reached during the test by any one of the unexposed surface thermocouples during the entire optional Insulation Test of the Flame Intrusion Test.*

10.1.8.5 *The maximum average temperature reached during the test by all of the unexposed surface thermocouples during the entire optional Insulation Test of the Flame Intrusion Test.*

ASTM—continued

E2957—2015: Standard Test Method for Resistance to Wildfire Penetration of Eaves, Soffits and Other Projections
R337.7.5, R337.7.6, R337.7.8, R337.7.10

ASTM E2957, Amended Sections as follows:

Add new Section 12.5 as follows:

12.5 Conditions of Acceptance: *Should one of the three replicates fail to meet the Conditions of Acceptance, three additional tests may be run. All of the additional tests must meet the Conditions of Acceptance.*

1. Absence of flame penetration of the eaves or horizontal projection assembly at any time.

2. Absence of structural failure of the eaves or horizontal projection subassembly at any time.

3. Absence of sustained combustion of any kind at the conclusion of the 40-minute test.

> **F844—07a(2013): Standard Specification for Washers, Steel, Plain (Flat), Unhardened for General Use**
Table R507.2.3

> **F1554—15: Specification for Anchor Bolts, Steel, 36, 55 and 105-ksi Yield Strength**
R608.5.2.2

F1667—15: Specification for Driven Fasteners, Nails, Spikes and Staples
R317.3, Table R507.2.3, Table R602.3(1), R703.3.3, R703.6.3, Table R703.15.1, Table R703.15.2, R905.2.5

> **F2090—17: Specification for Window Fall Prevention Devices with Emergency Escape (Egress) Release Mechanisms**
R310.1.1, R312.2.1, R312.2.2

>

AWC

American Wood Council
222 Catocin Circle, Suite 201
Leesburg, VA 20175

AWC STJR—2015: Span Tables for Joists and Rafters
R502.3, R802.4, R802.5

AWC WFCM—2015: Wood Frame Construction Manual for One- and Two-family Dwellings
R301.1.1, R301.2.1.1, R602.10.8.2, R608.9.2, Figure R608.9(9), R608.10

ANSI AWC NDS—2015: National Design Specification (NDS) for Wood Construction—with 2015 NDS Supplement
R404.2.2, R502.2, Table R503.1, R602.3, R608.9.2, Table R703.15.1, Table R703.15.2, R802.2

ANSI AWC PWF—2015: Permanent Wood Foundation Design Specification
R317.3.2, R401.1, R404.2.3

AWPA

American Wood Protection Association
P.O. Box 361784
Birmingham, AL 35236-1784

C1—03: All Timber Products—Preservative Treatment by Pressure Processes
R902.2

M4—11: Standard for the Care of Preservative-treated Wood Products
R317.1.1, R318.1.2

U1—14: USE CATEGORY SYSTEM: User Specification for Treated Wood Except Section 6 Commodity Specification H
R317.1, R402.1.2, R504.3, R703.6.3, R905.7.5, Table R905.8.5, R905.8.6

>

CEN

European Committee for Standardization (EN)
Central Secretariat
Rue de Stassart 36
B-10 50 Brussels

EN 15250-2007: Slow Heat Release Appliances Fired by Solid Fuel Requirements and Test Methods
R1002.2

>

CPA

Composite Panel Association
19465 Deerfield Avenue, Suite 306
Leesburg, VA 20176

ANSI A135.4—2012: Basic Hardboard
Table R602.3(2)

ANSI A135.5—2012: Prefinished Hardboard Paneling
R702.5

ANSI A135.6—2012: Engineered Wood Siding
R703.5

ANSI A135.7—2012: Engineered Wood Trim
R703.5

A208.1—2016: Particleboard
R503.3.1, R602.1.9, R605.1

CPSC

Consumer Product Safety Commission
4330 East-West Highway
Bethesda, MD 20814

16 CFR, Part 1201—(2002): Safety Standard for Architectural Glazing
R308.1.1, R308.3.1, Table R308.3.1(1)

16 CFR, Part 1209—(2002): Interim Safety Standard for Cellulose Insulation
R302.10.3

16 CFR, Part 1404—(2002): Cellulose Insulation
R302.10.3

CSA

CSA Group
8501 East Pleasant Valley Road
Cleveland, OH 44131-5516

AAMA/WDMA/CSA 101/I.S.2/A440—17: North American Fenestration Standard/Specification for Windows, Doors and Unit Skylights
R308.6.9, R609.3 <

ASME A17.1/CSA B44—2016: Safety Code for Elevators and Escalators
R321.1 <

B44—2013: Safety Code for Elevators and Escalators
R321.1 <

CSA O325—07: Construction Sheathing
R503.2.1, R602.1.8, R604.1, R803.2.1

O437-Series—93: Standards on OSB and Waferboard (Reaffirmed 2006)
R503.2.1, R602.1.8, R604.1, R803.2.1 <

CSSB

Cedar Shake & Shingle Bureau
P.O. Box 1178
Sumas, WA 98295-1178

CSSB—97: Grading and Packing Rules for Western Red Cedar Shakes and Western Red Shingles of the Cedar Shake and Shingle Bureau
R702.6, R703.6 <

DASMA

Door and Access Systems Manufacturers Association International
1300 Summer Avenue
Cleveland, OH 44115-2851

108—2017: Standard Method for Testing Garage Doors, Rolling Doors and Flexible Doors; Determination of Structural Performance Under Uniform Static/Air Pressure Difference
R609.4

115—2016: Standard Method for Testing Sectional Garage Doors, Rolling Doors and Flexible Doors: Determination of Structural Performance Under Missile Impact and Cyclic Wind Pressure
R301.2.1.2

DOC

United States Department of Commerce
1401 Constitution Avenue, NW
Washington, DC 20230

PS 1—09: Structural Plywood
R404.2.1, Table R404.2.3, R503.2.1, R602.1.8, R604.1, R803.2.1

PS 2—10: Performance Standard for Wood-based Structural-use Panels
R404.2.1, Table R404.2.3, R503.2.1, R602.1.8, R604.1, R803.2.1

PS 20—05: American Softwood Lumber Standard
R404.2.1, R502.1.1, R602.1.1, R802.1.1

FEMA

Federal Emergency Management Agency
500 C Street SW
Washington, DC 20472

FEMA TB-2—08: Flood Damage-resistant Materials Requirements
R322.1.8

FEMA TB-11—01: Crawlspace Construction for Buildings Located in Special Flood Hazard Area
R408.7

FM

FM Approvals
Headquarters Office
1151 Boston-Providence Turnpike
P.O. Box 9102
Norwood, MA 02062

4450—(1989): Approval Standard for Class 1 Insulated Steel Deck Roofs—with Supplements through July 1992
R906.1

4880—(2015): Approval Standard for Class 1 Rating of Building Panels or Interior Finish Materials
R316.6

GA

Gypsum Association
6525 Belcrest Road, Suite 480
Hyattsville, MD 20782

GA-253—2016: Application of Gypsum Sheathing
Table R602.3(1)

HPVA

Hardwood Plywood & Veneer Association
1825 Michael Faraday Drive
Reston, Virginia 20190

ANSI/HPVA HP-1—2016: American National Standard for Hardwood and Decorative Plywood
R702.5

ICC

International Code Council, Inc.
500 New Jersey Avenue NW
6th Floor
Washington, DC 20001

ICC/ANSI A117.1—09: Accessible and Usable Buildings and Facilities
R321.3

ICC—ES EG107: Evaluation guideline for determination of Volatile Organic Compound (voc) content
R902

ICC 400—17: Standard on the Design and Construction of Log Structures
R301.1.1, R502.1.4, R602.1.4, R703.1, R802.1.3

ICC 500—14: ICC/NSSA Standard on the Design and Construction of Storm Shelters
R323.1

ICC 600—14: Standard for Residential Construction in High-wind Regions
R301.2.1.1

ICC—continued

IEBC—18: International Existing Building Code®
R110.2

IFC—18: International Fire Code®
R102.7

ISO

International Organization for Standardization
Chemin de Blandonnet 8
CP 401
1214 Vernier
Geneva, Switzerland

8336—2009: Fibre-cement Flat Sheets-product Specification and Test Methods
Table R503.2.1.1(1), Table R503.2.1.1(2), Table R602.3(2), Table R702.4.2, R703.10.1, R703.10.2

NFPA

National Fire Protection Association
1 Batterymarch Park
Quincy, MA 02169-7471

13—16: Standard for Installation of Sprinkler Systems *as amended**
R302.3
See CCR, Title 24 Part 2 California Building Code, Chapter 35 or CCR, Title 24, Part 9 California Fire Code, Chapter 80 for amendments to NFPA 13.

13D—16: Standard for the Installation of Sprinkler Systems in One- and Two-family Dwellings and Manufactured Homes *as amended**
R313.1.1, R313.2.1, R324.6.2.1

NFPA 13D, Amended Sections as follows:

Revise Section 6.2.2 to read as follows:

6.2.2 Where a well, pump, tank *or combination thereof* is the source of supply for a fire sprinkler system, *the configuration for the system shall be one of the following:*

(1) The water supply shall serve both domestic and fire sprinkler systems,

(*a*) A test connection shall be provided downstream of the pump that creates a flow of water equal to the smallest sprinkler on the system. The connection shall return water to the tank.

(*b*) Any disconnecting means for the pump shall be approved.

(*c*) A method for refilling the tank shall be piped to the tank.

(*d*) A method of seeing the water level in the tank shall be provided without having to open the tank.

(*e*) The pump shall not be permitted to sit directly on the floor.

(2) A stand-alone tank is permitted if the following conditions are met:

(a) The pump shall be connected to a 220-volt circuit breaker shared with a common household appliance (e.g., range, oven, dryer),

(b) The pump shall be a stainless steel 240-volt pump,

(c) A valve shall be provided to exercise the pump. The discharge of the exercise valve shall drain to the tank, and

(d) A sign shall be provided stating "Valve must be opened monthly for 5 minutes."

(e) A means for automatically refilling the tank level, so that the tank capacity will meet the required water supply duration in minutes, shall be provided.

(f) A test connection shall be provided downstream of the pump that creates a flow of water equal to the smallest sprinkler on the system. The connection may return water to the tank.

(g) Any disconnecting means for the pump shall be approved.

(h) A method for refilling the tank shall be piped to the tank.

(i) A method of seeing the water level in the tank shall be provided without having to open the tank.

(j) The pump shall not be permitted to sit directly on the floor.

Add new Section 6.2.2.1 to read as follows:

6.2.2.1 *Where a fire sprinkler system is supplied by a stored water source with an automatically operated means of pressurizing the system other than an electric pump, the water supply may serve the sprinkler system only.*

Add new Section 6.2.4 to read as follows:

6.2.4 *Where a water supply serves both domestic and fire sprinkler systems, 5 gpm (19 L/min) shall be added to the sprinkler system demand at the point where the systems are connected, to determine the size of common piping and the size of the total water supply requirements where no provision is made to prevent flow into the domestic water system upon operation of a sprinkler. For multipurpose piping systems, the 5 gpm (19 L/min) demand shall be added at the domestic connection nearest the design area. This demand may be split between two domestic connections at 2.5 gpm (10 L/min) each.*

NFPA—continued

Revise Section 8.3.4 to read as follows:

8.3.4* *Sprinklers shall not be required in detached garages, open attached porches, carports with no habitable space above, and similar structures.*

Revise Section 8.3.4 to read as follows:

8.3.4* *Sprinklers shall not be required in detached garages, open attached porches, carports with no habitable space above, and similar structures.*

Add new Section 8.3.10 and 8.3.10.1 as follows:

8.3.10 Solar photovoltaic panel structures

8.3.10.1 Sprinklers shall be permitted to be omitted from the following structures:

(1) Solar photovoltaic panel structures with no use underneath. Signs may be provided, as determined by the enforcing agency prohibiting any use underneath including storage.

(2) Solar photovoltaic (PV) panels supported by framing that have sufficient uniformly distributed and unobstructed openings throughout the top of the array (horizontal plane) to allow heat and gases to escape, as determined by the enforcing agency.

13R—16: Standard for the Installation of Sprinkler Systems in Low-Rise Residential Occupancies

R325.5

> **72—16: National Fire Alarm and Signaling Code *as amended****

R314.1, R314.7.1

NFPA 72, Amended Sections as follows:

Revise Section 10.3.1 to read as follows:

10.3.1 *Equipment constructed and installed in conformity with this code shall be listed for the purpose for which it is used. Fire alarm systems and components shall be California State Fire Marshal approved and listed in accordance with California Code of Regulations, Title 19, Division 1.*

Revise Section 10.3.3 to read as follows:

10.3.3 *All devices and appliances that receive their power from the initiating device circuit or signaling line circuit of a control unit shall be California State Fire Marshal listed for use with the control unit.*

Revise Section 10.7.1 to read as follows:

10.7.1 *Where approved by the authority having jurisdiction, ECS priority signals when evaluated by stakeholders through risk analysis in accordance with 24.3.11 shall be permitted to take precedence over all other signals.*

Revise Section 12.3.8.1 to read as follows:

12.3.8.1 *The outgoing and return (redundant) circuit conductors shall be permitted in the same cable assembly (i.e., multiconductor cable), enclosure, or raceway only under the following conditions:*

(1) For a distance not to exceed 10 ft (3.0 m) where the outgoing and return conductors enter or exit the initiating device, notification appliance, or control unit enclosures

(2) Single drops installed in the raceway to individual devices or appliances

*(3)*In a single room not exceeding 1000 ft² (93 m²) in area, a drop installed in the raceway to multiple devices or appliances that does not include any emergency control function devices*

(4) Where the vertically run conductors are contained in a 2-hour rated cable assembly, or enclosed (installed) in a 2-hour rated enclosure or a listed circuit integrity (C.I.) cable, which meets or exceeds a 2-hour fire resistive rating.

Revise Section 14.4.6.1 to read as follows:

14.4.6.1 Testing. *Household fire alarm systems shall be tested in accordance with the manufacturer's published instructions according to the methods of Table 14.4.3.2.*

Revise Section 17.15 to read as follows:

17.15 Fire Extinguisher Electronic Monitoring Device. *A fire extinguisher electronic monitoring device shall indicate those conditions for a specific fire extinguisher required by California Code of Regulations, Title 19, Division 1, Chapter 1, Section 574.2 (c) and California Fire Code to a fire alarm control unit.*

Revise Section 21.3.6 to read as follows:

21.3.6 *Smoke detectors shall not be installed in unsprinklered elevator hoistways unless they are installed to activate the elevator hoistway smoke relief equipment or where required by Chapter 30 of the California Building Code.*

Revise Section 23.8.5.1.2 to read as follows:

23.8.5.1.2 *Where connected to a supervising station, fire alarm systems employing automatic fire detectors or waterflow detection devices shall include a manual fire alarm box to initiate a signal to the supervising station.*

Exception: *Fire alarm systems dedicated to elevator recall control, and supervisory service and fire sprinkler monitoring as permitted in Section 21.3 of NFPA 72.*

Revise Section 23.8.5.4.1 to read as follows:

23.8.5.4.1 Systems equipped with alarm verification features shall be permitted under the following conditions:

(1) The alarm verification feature is not initially enabled unless conditions or occupant activities that are expected to cause nuisance alarms are anticipated in the area that is protected by the smoke detectors. Enabling of the alarm verification feature shall be protected by password or limited access.

NFPA—continued

(2) A smoke detector that is continuously subjected to a smoke concentration above alarm threshold does not delay the system functions of Sections 10.7 through 10.16, 23.8.1.1, or 21.2.1 by more than 30 seconds.

(3) Actuation of an alarm-initiating device other than a smoke detector causes the system functions of Sections 10.7 through 10.16, 23.8.1.1, or 21.2.1 without additional delay.

(4) The current status of the alarm verification feature is shown on the record of completion (see Figure 7.8.2(a), item 4.3).

(5) Operation of a patient room smoke detector in I-2 and R-2.1 Occupancies shall not include an alarm verification feature.

Revise Section 29.3.1 to read as follows:

29.3.1 *All devices, combinations of devices, and equipment to be installed in conformity with this chapter shall be approved and listed by the California State Fire Marshal for the purposes for which they are intended.*

Revise Section 29.5.2.1.1 to read as follows:

29.5.2.1.1* Smoke and Heat Alarms. *Unless exempted by applicable laws, codes, or standards, smoke or heat alarms used to provide a fire-warning function, and when two or more alarms are installed within a dwelling unit, suite of rooms, or similar area, shall be arranged so that the operation of any smoke or heat alarm causes all alarms within these locations to sound.*

Note: Exception to 29.5.2.1.1 not adopted by the SFM

Add Section 29.7.2.1 to read as follows:

29.7.2.1 The alarm verification feature shall not be used for household fire warning equipment.

Add Section 29.7.6.7.1 to read as follows:

29.7.6.7.1 The alarm verification feature shall not be used for household fire warning equipment.

Revise Section 23.8.3.4 to read as follows:

29.8.3.4 Specific location requirements. *The installation of smoke alarms and smoke detectors shall comply with the following requirements:*

(1) Smoke alarms and smoke detectors shall not be located where ambient conditions, including humidity and temperature, are outside the limits specified by the manufacturer's published instructions.

(2) Smoke alarms and smoke detectors shall not be located within unfinished attics or garages or in other spaces where temperatures can fall below 40°F (4°C) or exceed 100°F (38°C).

(3) Where the mounting surface could become considerably warmer or cooler than the room, such as a poorly insulated ceiling below an unfinished attic or an exterior wall, smoke alarms and smoke detectors shall be mounted on an inside wall.

(4) Smoke alarms or smoke detectors shall be installed a minimum of 20 feet horizontal distance from a permanently installed cooking appliance.

Exceptions: *Ionization smoke alarms with an alarm silencing switch or photoelectric smoke alarms shall be permitted to be installed 10 feet (3 m) or greater from a permanently installed cooking appliance.*

Photoelectric smoke alarms shall be permitted to be installed greater than 6 feet (1.8 m) from a permanently installed cooking appliance where the kitchen or cooking area and adjacent spaces have no clear interior partitions and the 10 ft distances would prohibit the placement of a smoke alarm or smoke detector required by other sections of the code.

Smoke alarms listed for use in close proximity to a permanently installed cooking appliance.

(5) Effective January 1, 2016, smoke alarms and smoke detectors used in household fire alarm systems installed between 6 ft (1.8 m) and 20 ft (6.1 m) along a horizontal flow path from a stationary or fixed cooking appliance shall be listed for resistance to common nuisance sources from cooking.

(6) Installation near bathrooms. Smoke alarms shall be installed not less than a 3-foot (0.91 m) horizontal distance from the door or opening of a bathroom that contains a bathtub or shower unless this would prevent placement of a smoke alarm required by other sections of the code.

(7) Smoke alarms and smoke detectors shall not be installed within a 36 in. (910 mm) horizontal path from the supply registers of a forced air heating or cooling system and shall be installed outside of the direct airflow from those registers.

(8) Smoke alarms and smoke detectors shall not be installed within a 36 in. (910 mm) horizontal path from the tip of the blade of a ceiling-suspended (paddle) fan.

(9) Where stairs lead to other occupied levels, a smoke alarm or smoke detector shall be located so that smoke rising in the stairway cannot be prevented from reaching the smoke alarm or smoke detector by an intervening door or obstruction.

(10) For stairways leading up from a basement, smoke alarms or smoke detectors shall be located on the basement ceiling near the entry to the stairs.

(11) For tray-shaped ceilings (coffered ceilings), smoke alarms and smoke detectors shall be installed on the highest portion of the ceiling or on the sloped portion of the ceiling within 12 in. (300 mm) vertically down from the highest point.

(12) Smoke alarms and detectors installed in rooms with joists or beams shall comply with the requirements of 17.7.3.2.4 of NFPA 72.

(13) Heat alarms and detectors installed in rooms with joists or beams shall comply with the requirements of 17.6.3 of NFPA 72.

211—16: Standard for Chimneys, Fireplaces, Vents and Solid Fuel Burning Appliances <

R1002.5 <

259—18: Standard for Test Method for Potential Heat of Building Materials

R316.5.7, R316.5.8

NFPA—continued

275—17: Standard Method of Fire Tests for the Evaluation of Thermal Barriers
R316.4

286—15: Standard Methods of Fire Tests for Evaluating Contribution of Wall and Ceiling Interior Finish to Room Fire Growth
> R302.9.4, R316.6

720—15: Standard for the Installation of Carbon Monoxide (CO) Detectors and Warning Equipment
> R315.7.1, R315.7.2

PCA

Portland Cement Association
5420 Old Orchard Road
Skokie, IL 60077

100—12: Prescriptive Design of Exterior Concrete Walls for One- and Two-family Dwellings (Pub. No. EB241)
R301.2.2.5, R301.2.2.3.4, R404.1.3, R404.1.3.2.1, R404.1.3.2.2, R404.1.3.4, R404.1.4.2, R608.1, R608.2, R608.5.1, R608.9.2, R608.9.3

SBCA

Structural Building Components Association
6300 Enterprise Lane
Madison, WI 53719

BCSI—2013 (Updated March 2015): Building Component Safety Information Guide to Good Practice for Handling, Installing, Restraining & Bracing of Metal Plate Connected Wood Trusses
R502.11.2, R802.10.3

CFS-BCSI—2008: Cold-formed Steel Building Component Safety Information (CFSBCSI) Guide to Good Practice for Handling, Installing & Bracing of Cold-formed Steel Trusses
R505.1.3, R804.3.6

FS100—12: Standard Requirements for Wind Pressure Resistance of Foam Plastic Insulating Sheathing Used in Exterior Wall Covering Assemblies
R316.8

>

SFM

State of California
Department of Forestry and Fire Protection
Office of the State Fire Marshal
P.O. Box 944246
Sacramento, CA 944246-2460

SFM 12-3: Releasing Systems for Security Bars in Dwellings
R310

SFM 12-7A-1: Exterior Wall Siding and Sheathing
R327.5.3, R327.6.3.1, R327.6.3.2.3

SFM 12-7A-2: Exterior Window
R327.5.3, R327.6.3.2.2

SFM 12-7A-3: Horizontal Protection Underside
R327.5.3, R327.6.2.3

SFM 12-7A-4: Decking
R327.5.3, R327.6.4.1.1

SFM 12-7A-4A: Decking Alternate Method A
R327.3.7, R327.9.3.4

SFM 12-7A-5: Ignition Resistant Building Material
R327.2, R327.3.7, R327.4.2, R327.6.3.2, R327.9.3.1

(The Office of the State Fire Marshal standards referred to above are found in the California Code of Regulations, Title 24, Part 12.)

TMS

The Masonry Society
105 South Sunset Street, Suite Q
Longmont, CO 80501

402—2016: Building Code Requirements for Masonry Structures
R404.1.2, R606.1, R606.1.1, R606.12.1, R606.12.2.3.1, R606.12.3.1, R703.12

403—2017: Direct Design Handbook for Masonry Structures
R606.1, R606.1.1, R606.12.1, R606.12.3.1

TMS—continued

404—2016: Standard for the Design of Architectural Cast Stone
R606.1

602—2016: Specification for Masonry Structures
606.2.10, R606.2.13, R703.12

TPI

Truss Plate Institute
218 N. Lee Street, Suite 312
Alexandria, VA 22314

TPI 1—2014: National Design Standard for Metal-plate-connected Wood Truss Construction
R502.11.1, R802.10.2

UBC

International Code Council, Inc.
500 New Jersey Avenue, NW 6th Floor
Washington, DC 20001

UBC Standard 15-2: Test Standard for Determining the Fire Retardancy of Roof-covering Materials
R902

UBC Standard 15-3: Wood Shakes
R902

UBC Standard 15-4: Wood Shingles
R902

UL

UL LLC
333 Pfingsten Road
Northbrook, IL 60062

55A—04: Materials for Built-up Roof Coverings
R905.9.2

103—2010: Factory-built Chimneys for Residential Type and Building Heating Appliances—with revisions through July 2012
R202, R1005.3

127—2011: Factory-built Fireplaces—with revisions through May 2015
R1001.11, R1004.1, R1004.4, R1004.5, R1005.4

217—06: Single- and Multiple-station Smoke Alarms—with revisions through October 2015
R314.1.1, R315.1.1

263—2011: Standards for Fire Test of Building Construction and Materials—with revisions through June 2015
Table 302.1(1), Table R302.1(2), R302.2, R302.2.1, R302.2.2, R302.4.1, R302.11.1, Table R312.1(1), R606.2.2

268—2009: Smoke Detectors for Fire Alarm Systems
R314.7.1, R314.7.4, R315.7.4

325—02: Door, Drapery, Gate, Louver and Window Operations and Systems—with revisions through May 2015
R309.4

641—2010: Type L, Low-temperature Venting Systems—with revisions through June 2013
R202, R1003.11.5

723—08: Standard for Test for Surface Burning Characteristics of Building Materials—with revisions through August 2013
R202, R302.9.3, R302.9.4, R302.10.1, R302.10.2, R316.3, R316.5.9, R316.5.11, R507.2.2.2, R703.14.3, R802.1.5

790—04: Standard Test Methods for Fire Tests of Roof Coverings—with revisions through July 2014
R302.2.4, R902.1

959—2010: Medium Heat Appliance Factory-built Chimneys—with revisions through June 2014
R1005.6

1040—96: Fire Test of Insulated Wall Construction—with revisions through October 2012
R316.6

1256—02: Fire Test of Roof Deck Construction—with revisions through July 2013
R906.1

1479—03: Fire Tests of Through-Penetration Firestops—with revisions through June 2015
R302.4.1.2

UL—continued

1482—2011: Solid-fuel-type Room Heaters—with revisions through August 2015

R1002.2, R1002.5

1618—09: Wall Protectors, Floor Protectors, and Hearth Extensions—with revisions through October 2015

R1004.2

1703—02: Flat-plate Photovoltaic Modules and Panels—with revisions through October 2015

R324.3.1, R902.4, R905.16.4, R907.17.5

1715—97: Fire Test of Interior Finish Material—with revisions through January 2013

R316.6

1741—2010: Inverters, Converters, Controllers and Interconnection System Equipment with Distributed Energy Resources—with revisions through January 2015

R324.3.1, R327.4

1777—07: Chimney Liners—with revisions through October 2015

R1003.11.1, R1003.18

1897—12: Uplift Tests for Roof Covering Systems—with revisions through September 2015

R905.17.7

2034—08: Standard for Single- and Multiple-station Carbon Monoxide Alarms—with revisions through March 2015

R314.1.1, R315.1.1

2075—2013: Standard for Gas and Vapor Detectors and Sensors

R314.7.4, R315.7.1, R315.7.4

2703—14: Mounting Systems, Mounting Devices, Clamping/Retention Devices and Ground Lugs for Use with Flat-Plate Photovoltaic Modules and Panels

R902.4

9540—14: Outline of Investigation for Energy Storage Systems and Equipment

R327.2, R327.4

ULC

ULC
13775 Commerce Parkway
Richmond, BC V6V 2V4

CAN/ULC S 102.2—2010: Standard Methods for Test for Surface Burning Characteristics of Building Materials and Assemblies

R302.10.1, R302.10.2

WDMA

Window and Door Manufacturers Association
2025 M Street NW, Suite 800
Washington, DC 20036-3309

AAMA/WDMA/CSA 101/I.S2/A440—17: North American Fenestration Standard/Specifications for Windows, Doors and Skylights

R308.6.9, R609.3

I.S. 11—13: Industry Standard Analytical Method for Design Pressure (DP) Ratings of Fenestration Products

R308.6.9.1, R609.3.1

WMA

World Millwork Alliance (formerly Association of Millwork Distributors Standards AMD)
10047 Robert Trent Parkway
New Port Richey, FL 34655-4649

ANSI WMA 100—2016: Standard Method of Determining Structural Performance Ratings of Side Hinged Exterior Door Systems and Procedures for Component Substitution

R609.3

APPENDIX A

RESERVED

APPENDIX B

RESERVED

APPENDIX C

RESERVED

APPENDIX D

RESERVED

APPENDIX E

RESERVED

CALIFORNIA RESIDENTIAL CODE – MATRIX ADOPTION TABLE
APPENDIX F – RADON CONTROL METHODS

(Matrix Adoption Tables are nonregulatory, intended only as an aid to the code user. See Chapter 1 for state agency authority and building applications.)

Adopting agency	BSC	BSC-CG	SFM	HCD			DSA			OSHPD						BSCC	DPH	AGR	DWR	CEC	CA	SL	SLC
				1	2	1/AC	AC	SS	SS/CC	1	1R	2	3	4	5								
Adopt entire chapter																							
Adopt entire chapter as amended (amended sections listed below)																							
Adopt only those sections that are listed below																							
Chapter / Section																							

APPENDIX F

RADON CONTROL METHODS

The provisions contained in this appendix are not mandatory unless specifically adopted by a state agency or referenced in the adopting ordinance.

User note:

About this appendix: *Appendix F contains provisions that are intended to mitigate the transfer of radon gases from the soil into dwelling units. Radon is a radioactive gas that has been identified as a cancer-causing agent. Radon comes from the natural breakdown of uranium in soil, rock and water.*

SECTION AF101
SCOPE

AF101.1 General. This appendix contains requirements for new construction in jurisdictions where radon-resistant construction is required.

Inclusion of this appendix by jurisdictions shall be determined through the use of locally available data or determination of Zone 1 designation in Figure AF101 and Table AF101(1).

SECTION AF102
DEFINITIONS

AF102.1 General. For the purpose of these requirements, the terms used shall be defined as follows:

DRAIN TILE LOOP. A continuous length of drain tile or perforated pipe extending around all or part of the internal or external perimeter of a basement or crawl space footing.

RADON GAS. A naturally occurring, chemically inert, radioactive gas that is not detectable by human senses. As a gas, it can move readily through particles of soil and rock, and can accumulate under the slabs and foundations of homes where it can easily enter into the living space through construction cracks and openings.

SOIL-GAS-RETARDER. A continuous membrane of 6-mil (0.15 mm) polyethylene or other equivalent material used to retard the flow of soil gases into a building.

SUBMEMBRANE DEPRESSURIZATION SYSTEM. A system designed to achieve lower submembrane air pressure relative to crawl space air pressure by use of a vent drawing air from beneath the soil-gas-retarder membrane.

SUBSLAB DEPRESSURIZATION SYSTEM (Active). A system designed to achieve lower subslab air pressure relative to indoor air pressure by use of a fan-powered vent drawing air from beneath the slab.

SUBSLAB DEPRESSURIZATION SYSTEM (Passive). A system designed to achieve lower subslab air pressure relative to indoor air pressure by use of a vent pipe routed through the conditioned space of a building and connecting the subslab area with outdoor air, thereby relying on the convective flow of air upward in the vent to draw air from beneath the slab.

SECTION AF103
REQUIREMENTS

AF103.1 General. The following construction techniques are intended to resist radon entry and prepare the building for post-construction radon mitigation, if necessary (see Figure AF103). These techniques are required in areas where designated by the jurisdiction.

AF103.2 Subfloor preparation. A layer of gas-permeable material shall be placed under all concrete slabs and other floor systems that directly contact the ground and are within the walls of the living spaces of the building, to facilitate future installation of a subslab depressurization system, if needed. The gas-permeable layer shall consist of one of the following:

1. A uniform layer of clean aggregate, not less than 4 inches (102 mm) thick. The aggregate shall consist of material that will pass through a 2-inch (51 mm) sieve and be retained by a $^1/_4$-inch (6.4 mm) sieve.
2. A uniform layer of sand (native or fill), not less than 4 inches (102 mm) thick, overlain by a layer or strips of geotextile drainage matting designed to allow the lateral flow of soil gases.
3. Other materials, systems or floor designs with demonstrated capability to permit depressurization across the entire subfloor area.

AF103.3 Soil-gas-retarder. A minimum 6-mil (0.15 mm) [or 3-mil (0.075 mm) cross-laminated] polyethylene or equivalent flexible sheeting material shall be placed on top of the gas-permeable layer prior to casting the slab or placing the floor assembly to serve as a soil-gas-retarder by bridging any cracks that develop in the slab or floor assembly, and to prevent concrete from entering the void spaces in the aggregate base material. The sheeting shall cover the entire floor area with separate sections of sheeting lapped not less than 12 inches (305 mm). The sheeting shall fit closely around any pipe, wire or other penetrations of the material. Punctures or tears in the material shall be sealed or covered with additional sheeting.

AF103.4 Entry routes. Potential radon entry routes shall be closed in accordance with Sections AF103.4.1 through AF103.4.10.

AF103.4.1 Floor openings. Openings around bathtubs, showers, water closets, pipes, wires or other objects that penetrate concrete slabs, or other floor assemblies, shall be filled with a polyurethane caulk or equivalent sealant applied in accordance with the manufacturer's recommendations.

AF103.4.2 Concrete joints. Control joints, isolation joints, construction joints, and any other joints in concrete slabs or between slabs and foundation walls shall be sealed with a caulk or sealant. Gaps and joints shall be cleared of loose material and filled with polyurethane caulk or other elastomeric sealant applied in accordance with the manufacturer's recommendations.

AF103.4.3 Condensate drains. Condensate drains shall be trapped or routed through nonperforated pipe to daylight.

AF103.4.4 Sumps. Sump pits open to soil or serving as the termination point for subslab or exterior drain tile loops shall be covered with a gasketed or otherwise sealed lid. Sumps used as the suction point in a subslab depressurization system shall have a lid designed to accommodate the vent pipe. Sumps used as a floor drain shall have a lid equipped with a trapped inlet.

AF103.4.5 Foundation walls. Hollow block masonry foundation walls shall be constructed with either a continuous course of solid masonry, one course of masonry grouted solid, or a solid concrete beam at or above finished ground surface to prevent the passage of air from the interior of the wall into the living space. Where a brick veneer or other masonry ledge is installed, the course immediately below that ledge shall be sealed. Joints, cracks or other openings around all penetrations of both exterior and interior surfaces of masonry block or wood foundation walls below the ground surface shall be filled with polyurethane caulk or equivalent sealant. Penetrations of concrete walls shall be filled.

AF103.4.6 Dampproofing. The exterior surfaces of portions of concrete and masonry block walls below the ground surface shall be dampproofed in accordance with Section R406.

AF103.4.7 Air-handling units. Air-handling units in crawl spaces shall be sealed to prevent air from being drawn into the unit.

Exception: Units with gasketed seams or units that are otherwise sealed by the manufacturer to prevent leakage.

AF103.4.8 Ducts. Ductwork passing through or beneath a slab shall be of seamless material unless the air-handling system is designed to maintain continuous positive pressure within such ducting. Joints in such ductwork shall be sealed to prevent air leakage.

Ductwork located in crawl spaces shall have seams and joints sealed by closure systems in accordance with Section M1601.4.1.

AF103.4.9 Crawl space floors. Openings around all penetrations through floors above crawl spaces shall be caulked or otherwise filled to prevent air leakage.

AF103.4.10 Crawl space access. Access doors and other openings or penetrations between basements and adjoining crawl spaces shall be closed, gasketed or otherwise filled to prevent air leakage.

AF103.5 Passive submembrane depressurization system. In buildings with crawl space foundations, the following components of a passive submembrane depressurization system shall be installed during construction.

Exception: Buildings in which an approved mechanical crawl space ventilation system or other equivalent system is installed.

AF103.5.1 Ventilation. Crawl spaces shall be provided with vents to the exterior of the building. The minimum net area of ventilation openings shall comply with Section R408.1.

AF103.5.2 Soil-gas-retarder. The soil in crawl spaces shall be covered with a continuous layer of minimum 6-mil (0.15 mm) polyethylene soil-gas-retarder. The ground cover shall be lapped not less than 12 inches (305 mm) at joints and shall extend to all foundation walls enclosing the crawl space area.

AF103.5.3 Vent pipe. A plumbing tee or other approved connection shall be inserted horizontally beneath the sheeting and connected to a 3- or 4-inch-diameter (76 or 102 mm) fitting with a vertical vent pipe installed through the sheeting. The vent pipe shall be extended up through the building floors, and terminate not less than 12 inches (305 mm) above the roof in a location not less than 10 feet (3048 mm) away from any window or other opening into the conditioned spaces of the building that is less than 2 feet (610 mm) below the exhaust point, and 10 feet (3048 mm) from any window or other opening in adjoining or adjacent buildings.

AF103.6 Passive subslab depressurization system. In basement or slab-on-grade buildings, the following components of a passive subslab depressurization system shall be installed during construction.

AF103.6.1 Vent pipe. A minimum 3-inch-diameter (76 mm) ABS, PVC or equivalent gas-tight pipe shall be embedded vertically into the subslab aggregate or other permeable material before the slab is cast. A "T" fitting or equivalent method shall be used to ensure that the pipe opening remains within the subslab permeable material. Alternatively, the 3-inch (76 mm) pipe shall be inserted directly into an interior perimeter drain tile loop or through a sealed sump cover where the sump is exposed to the subslab aggregate or connected to it through a drainage system.

The pipe shall be extended up through the building floors, and terminate not less than 12 inches (305 mm) above the surface of the roof in a location not less than 10 feet (3048 mm) away from any window or other opening into the conditioned spaces of the building that is less than 2 feet (610 mm) below the exhaust point, and 10 feet (3048 mm) from any window or other opening in adjoining or adjacent buildings.

AF103.6.2 Multiple vent pipes. In buildings where interior footings or other barriers separate the subslab aggregate or other gas-permeable material, each area shall be fitted with an individual vent pipe. Vent pipes shall connect to a single vent that terminates above the roof or each individual vent pipe shall terminate separately above the roof.

AF103.7 Vent pipe drainage. Components of the radon vent pipe system shall be installed to provide positive drainage to the ground beneath the slab or soil-gas-retarder.

AF103.8 Vent pipe accessibility. Radon vent pipes shall be accessible for future fan installation through an attic or other area outside the habitable space.

Exception: The radon vent pipe need not be accessible in an attic space where an approved roof-top electrical supply is provided for future use.

AF103.9 Vent pipe identification. Exposed and visible interior radon vent pipes shall be identified with not less than one label on each floor and in accessible attics. The label shall read: "Radon Reduction System."

AF103.10 Combination foundations. Combination basement/crawl space or slab-on-grade/crawl space foundations shall have separate radon vent pipes installed in each type of foundation area. Each radon vent pipe shall terminate above the roof or shall be connected to a single vent that terminates above the roof.

AF103.11 Building depressurization. Joints in air ducts and plenums in unconditioned spaces shall meet the requirements of Section M1601. Thermal envelope air infiltration requirements shall comply with the energy conservation provisions in Chapter 11. Fireblocking shall meet the requirements contained in Section R302.11.

AF103.12 Power source. To provide for future installation of an active submembrane or subslab depressurization system, an electrical circuit terminated in an approved box shall be installed during construction in the attic or other anticipated location of vent pipe fans. An electrical supply shall be accessible in anticipated locations of system failure alarms.

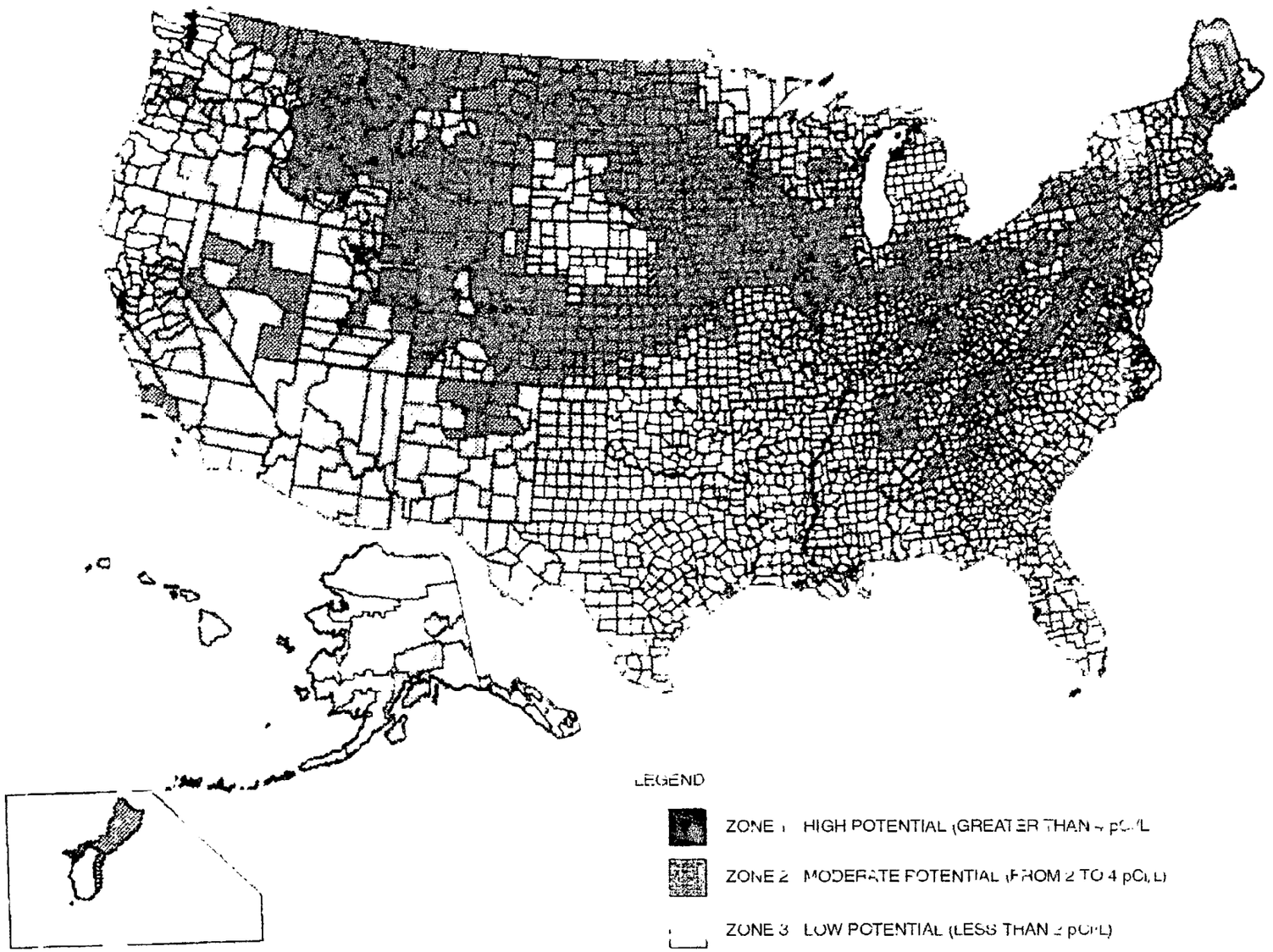

a. pCi/L standard for picocuries per liter of radon gas. The U.S. Environmental Protection Agency (EPA) recommends that homes that measure 4 pCi/L and greater be mitigated.
The EPA and the U.S. Geological Survey have evaluated the radon potential in the United States and have developed a map of radon zones designed to assist *building officials* in deciding whether radon-resistant features are applicable in new construction.
The map assigns each of the 3,141 counties in the United States to one of three zones based on radon potential. Each zone designation reflects the average short-term radon measurement that can be expected to be measured in a building without the implementation of radon-control methods. The radon zone designation of highest priority is Zone 1. Table AF101 lists the Zone 1 counties illustrated on the map. More detailed information can be obtained from state-specific booklets (EPA-402-R-93-021 through 070) available through State Radon Offices or from EPA Regional Offices.

FIGURE AF101
EPA MAP OF RADON ZONES

TABLE AF101(1)
HIGH RADON-POTENTIAL (ZONE 1) COUNTIES[a]

ALABAMA
Calhoun
Clay
Cleburne
Colbert
Coosa
Franklin
Jackson
Lauderdale
Lawrence
Limestone
Madison
Morgan
Talladega

CALIFORNIA
Santa Barbara
Ventura

COLORADO
Adams
Arapahoe
Baca
Bent
Boulder
Chaffee
Cheyenne
Clear Creek
Crowley
Custer
Delta
Denver
Dolores
Douglas
El Paso
Elbert
Fremont
Garfield
Gilpin
Grand
Gunnison
Huerfano
Jackson
Jefferson
Kiowa
Kit Carson
Lake
Larimer
Las Animas
Lincoln
Logan
Mesa
Moffat
Montezuma
Montrose
Morgan
Otero
Ouray
Park
Phillips
Pitkin
Prowers
Pueblo
Rio Blanco
San Miguel
Summit
Teller
Washington
Weld
Yuma

CONNECTICUT
Fairfield
Middlesex
New Haven
New London

GEORGIA
Cobb
De Kalb
Fulton
Gwinnett

IDAHO
Benewah
Blaine
Boise
Bonner
Boundary
Butte
Camas
Clark
Clearwater
Custer
Elmore
Fremont
Gooding
Idaho
Kootenai
Latah
Lemhi
Shoshone
Valley

ILLINOIS
Adams
Boone
Brown
Bureau
Calhoun
Carroll
Cass
Champaign
Coles
De Kalb
De Witt
Douglas
Edgar
Ford
Fulton
Greene
Grundy
Hancock
Henderson
Henry
Iroquois
Jersey
Jo Daviess
Kane
Kendall
Knox
La Salle
Lee
Livingston
Logan
Macon
Marshall
Mason
McDonough
McLean
Menard
Mercer
Morgan
Moultrie
Ogle
Peoria
Piatt
Pike
Putnam
Rock Island
Sangamon
Schuyler
Scott
Stark
Stephenson
Tazewell
Vermilion
Warren
Whiteside
Winnebago
Woodford

INDIANA
Adams
Allen
Bartholomew
Benton
Blackford
Boone
Carroll
Cass
Clark
Clinton
De Kalb
Decatur
Delaware
Elkhart
Fayette
Fountain
Fulton
Grant
Hamilton
Hancock
Harrison
Hendricks
Henry
Howard
Huntington
Jay
Jennings
Johnson
Kosciusko
LaGrange
Lawrence
Madison
Marion
Marshall
Miami
Monroe
Montgomery
Noble
Orange
Putnam
Randolph
Rush
Scott
Shelby
St. Joseph
Steuben
Tippecanoe
Tipton
Union
Vermillion
Wabash
Warren
Washington
Wayne
Wells
White
Whitley

IOWA
All Counties

KANSAS
Atchison
Barton
Brown
Cheyenne
Clay
Cloud
Decatur
Dickinson
Douglas
Ellis
Ellsworth
Finney
Ford
Geary
Gove
Graham
Grant
Gray
Greeley
Hamilton
Haskell
Hodgeman
Jackson
Jewell
Johnson
Kearny
Kingman
Kiowa
Lane
Leavenworth
Lincoln
Logan
Marion
Marshall
McPherson
Meade
Mitchell
Nemaha
Ness
Norton
Osborne
Ottawa
Pawnee
Phillips
Pottawatomie
Pratt
Rawlins
Republic
Rice
Riley
Rooks
Rush
Saline
Scott
Sheridan
Sherman
Smith
Stanton
Thomas
Trego
Wallace
Washington
Wichita
Wyandotte

KENTUCKY
Adair
Allen
Barren
Bourbon
Boyle
Bullitt
Casey
Clark
Cumberland
Fayette
Franklin
Green
Harrison
Hart
Jefferson
Jessamine
Lincoln
Marion
Mercer
Metcalfe
Monroe
Nelson
Pendleton
Pulaski
Robertson
Russell
Scott
Taylor
Warren
Woodford

MAINE
Androscoggin
Aroostook
Cumberland
Franklin
Hancock
Kennebec
Lincoln
Oxford
Penobscot
Piscataquis
Somerset
York

MARYLAND
Baltimore
Calvert
Carroll
Frederick
Harford
Howard
Montgomery
Washington

MASS.
Essex
Middlesex
Worcester

MICHIGAN
Branch
Calhoun
Cass
Hillsdale
Jackson
Kalamazoo
Lenawee
St. Joseph
Washtenaw

MINNESOTA
Becker
Big Stone
Blue Earth
Brown
Carver
Chippewa
Clay
Cottonwood
Dakota
Dodge
Douglas
Faribault
Fillmore
Freeborn
Goodhue
Grant
Hennepin
Houston
Hubbard
Jackson
Kanabec
Kandiyohi
Kittson
Lac Qui Parle
Le Sueur
Lincoln
Lyon
Mahnomen
Marshall
Martin
McLeod
Meeker
Mower
Murray
Nicollet
Nobles
Norman
Olmsted
Otter Tail
Pennington
Pipestone
Polk
Pope
Ramsey
Red Lake
Redwood
Renville
Rice
Rock
Roseau
Scott
Sherburne
Sibley
Stearns
Steele
Stevens
Swift
Todd
Traverse
Wabasha
Wadena
Waseca
Washington
Watonwan
Wilkin
Winona
Wright
Yellow Medicine

MISSOURI
Andrew
Atchison
Buchanan
Cass
Clay
Clinton
Holt
Iron
Jackson
Nodaway
Platte

MONTANA
Beaverhead
Big Horn
Blaine
Broadwater
Carbon
Carter
Cascade
Chouteau
Custer
Daniels
Dawson
Deer Lodge
Fallon
Fergus
Flathead
Gallatin
Garfield
Glacier
Granite
Hill
Jefferson
Judith Basin
Lake
Lewis and Clark
Madison
McCone
Meagher
Missoula
Park
Phillips
Pondera
Powder River
Powell
Prairie
Ravalli
Richland
Roosevelt
Rosebud
Sanders
Sheridan
Silver Bow
Stillwater
Teton
Toole
Valley
Wibaux
Yellowstone

(continued)

TABLE AF101(1)—continued
HIGH RADON-POTENTIAL (ZONE 1) COUNTIES[a]

NEBRASKA
Adams
Boone
Boyd
Burt
Butler
Cass
Cedar
Clay
Colfax
Cuming
Dakota
Dixon
Dodge
Douglas
Fillmore
Franklin
Frontier
Furnas
Gage
Gosper
Greeley
Hamilton
Harlan
Hayes
Hitchcock
Hurston
Jefferson
Johnson
Kearney
Knox
Lancaster
Madison
Nance
Nemaha
Nuckolls
Otoe
Pawnee
Phelps
Pierce
Platte
Polk
Red Willow
Richardson
Saline
Sarpy
Saunders
Seward
Stanton
Thayer
Washington
Wayne
Webster
York

NEVADA
Carson City
Douglas
Eureka
Lander
Lincoln
Lyon
Mineral
Pershing
White Pine

NEW HAMPSHIRE
Carroll

NEW JERSEY
Hunterdon
Mercer
Monmouth
Morris
Somerset
Sussex
Warren

NEW MEXICO
Bernalillo
Colfax
Mora
Rio Arriba
San Miguel
Santa Fe
Taos

NEW YORK
Albany
Allegany
Broome
Cattaraugus
Cayuga
Chautauqua
Chemung
Chenango
Columbia
Cortland
Delaware
Dutchess
Erie
Genesee
Greene
Livingston
Madison
Onondaga
Ontario
Orange
Otsego
Putnam
Rensselaer
Schoharie
Schuyler
Seneca
Steuben
Sullivan
Tioga
Tompkins
Ulster
Washington
Wyoming
Yates

N. CAROLINA
Alleghany
Buncombe
Cherokee
Henderson
Mitchell
Rockingham
Transylvania
Watauga

N. DAKOTA
All Counties

OHIO
Adams
Allen
Ashland
Auglaize
Belmont
Butler
Carroll
Champaign
Clark
Clinton
Columbiana
Coshocton
Crawford
Darke
Delaware
Fairfield
Fayette
Franklin
Greene
Guernsey
Hamilton
Hancock
Hardin
Harrison
Holmes
Huron
Jefferson
Knox
Licking
Logan
Madison
Marion
Mercer
Miami
Montgomery
Morrow
Muskingum
Perry
Pickaway
Pike
Preble
Richland
Ross
Seneca
Shelby
Stark
Summit
Tuscarawas
Union
Van Wert
Warren
Wayne
Wyandot

PENNSYLVANIA
Adams
Allegheny
Armstrong
Beaver
Bedford
Berks
Blair
Bradford
Bucks
Butler
Cameron
Carbon
Centre
Chester
Clarion
Clearfield
Clinton
Columbia
Cumberland
Dauphin
Delaware
Franklin
Fulton
Huntingdon
Indiana
Juniata
Lackawanna
Lancaster
Lebanon
Lehigh
Luzerne
Lycoming
Mifflin
Monroe
Montgomery
Montour
Northampton
Northumberland
Perry
Schuylkill
Snyder
Sullivan
Susquehanna
Tioga
Union
Venango
Westmoreland
Wyoming
York

RHODE ISLAND
Kent
Washington

S. CAROLINA
Greenville

S. DAKOTA
Aurora
Beadle
Bon Homme
Brookings
Brown
Brule
Buffalo
Campbell
Charles Mix
Clark
Clay
Codington
Corson
Davison
Day
Deuel
Douglas
Edmunds
Faulk
Grant
Hamlin
Hand
Hanson
Hughes
Hutchinson
Hyde
Jerauld
Kingsbury
Lake
Lincoln
Lyman
Marshall
McCook
McPherson
Miner
Minnehaha
Moody
Perkins
Potter
Roberts
Sanborn
Spink
Stanley
Sully
Turner
Union
Walworth
Yankton

TENNESSEE
Anderson
Bedford
Blount
Bradley
Claiborne
Davidson
Giles
Grainger
Greene
Hamblen
Hancock
Hawkins
Hickman
Humphreys
Jackson
Jefferson
Knox
Lawrence
Lewis
Lincoln
Loudon
Marshall
Maury
McMinn
Meigs
Monroe
Moore
Perry
Roane
Rutherford
Smith
Sullivan
Trousdale
Union
Washington
Wayne
Williamson
Wilson

UTAH
Carbon
Duchesne
Grand
Piute
Sanpete
Sevier
Uintah

VIRGINIA
Alleghany
Amelia
Appomattox
Augusta
Bath
Bland
Botetourt
Bristol
Brunswick
Buckingham
Buena Vista
Campbell
Chesterfield
Clarke
Clifton Forge
Covington
Craig
Cumberland
Danville
Dinwiddie
Fairfax
Falls Church
Fluvanna
Frederick
Fredericksburg
Giles
Goochland
Harrisonburg
Henry
Highland
Lee
Lexington
Louisa
Martinsville
Montgomery
Nottoway
Orange
Page
Patrick
Pittsylvania
Powhatan
Pulaski
Radford
Roanoke
Rockbridge
Rockingham
Russell
Salem
Scott
Shenandoah
Smyth
Spotsylvania
Stafford
Staunton
Tazewell
Warren
Washington
Waynesboro
Winchester
Wythe

WASHINGTON
Clark
Ferry
Okanogan
Pend Oreille
Skamania
Spokane
Stevens

W. VIRGINIA
Berkeley
Brooke
Grant
Greenbrier
Hampshire
Hancock
Hardy
Jefferson
Marshall
Mercer
Mineral
Monongalia
Monroe
Morgan
Ohio
Pendleton
Pocahontas
Preston
Summers
Wetzel

WISCONSIN
Buffalo
Crawford
Dane
Dodge
Door
Fond du Lac
Grant
Green
Green Lake
Iowa
Jefferson
Lafayette
Langlade
Marathon
Menominee
Pepin
Pierce
Portage
Richland
Rock
Shawano
St. Croix
Vernon
Walworth
Washington
Waukesha
Waupaca
Wood

WYOMING
Albany
Big Horn
Campbell
Carbon
Converse
Crook
Fremont
Goshen
Hot Springs
Johnson
Laramie
Lincoln
Natrona
Niobrara
Park
Sheridan
Sublette
Sweetwater
Teton
Uinta
Washakie

a. The EPA recommends that this county listing be supplemented with other available State and local data to further understand the radon potential of a Zone 1 area.

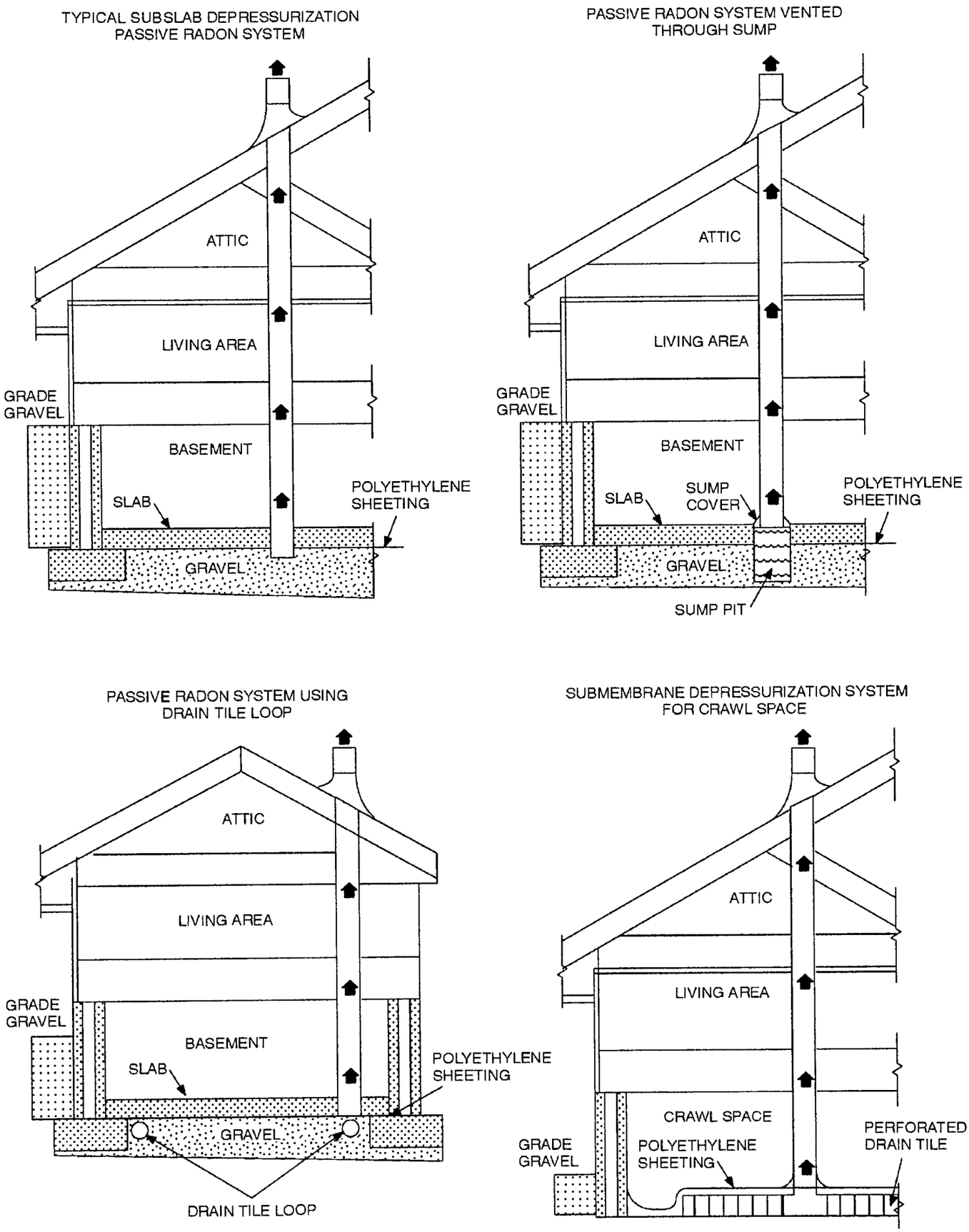

FIGURE AF103
RADON-RESISTANT CONSTRUCTION DETAILS FOR FOUR FOUNDATION TYPES

APPENDIX G

RESERVED

CALIFORNIA RESIDENTIAL CODE – MATRIX ADOPTION TABLE
APPENDIX H – PATIO COVERS

(Matrix Adoption Tables are nonregulatory, intended only as an aid to the code user. See Chapter 1 for state agency authority and building applications.)

Adopting agency	BSC	BSC-CG	SFM	HCD			DSA			OSHPD						BSCC	DPH	AGR	DWR	CEC	CA	SL	SLC
				1	2	1/AC	AC	SS	SS/CC	1	1R	2	3	4	5								
Adopt entire chapter				X																			
Adopt entire chapter as amended (amended sections listed below)																							
Adopt only those sections that are listed below																							
Chapter / Section																							

APPENDIX H

PATIO COVERS

The provisions contained in this appendix are not mandatory unless specifically adopted by a state agency or referenced in the adopting ordinance.

User note:

About this appendix: *Appendix H relaxes certain provisions contained in the body of the code as related to patio covers, including those regarding: permitted uses; exterior wall insect screens; glazing and translucent or transparent plastic; light, ventilation and emergency egress; height; structural design loads; and footings. This appendix also includes provisions that are specifically applicable to hurricane-prone regions.*

SECTION AH101
GENERAL

AH101.1 Scope. Patio covers shall conform to the requirements of Sections AH101 through AH106.

AH101.2 Permitted uses. Patio covers detached from or attached to dwelling units shall be used only for recreational, outdoor living purposes, and not as carports, garages, storage rooms or habitable rooms.

SECTION AH102
DEFINITION

AH102.1 General. The following word and term shall, for the purposes of this appendix, have the meaning shown herein.

PATIO COVER. A structure with open or glazed walls that is used for recreational, outdoor living purposes associated with a dwelling unit.

SECTION AH103
EXTERIOR WALLS AND OPENINGS

AH 103.1 Enclosure walls. Enclosure walls shall be permitted to be of any configuration, provided that the open or glazed area of the longer wall and one additional wall is not less than 65 percent of the area below 6 feet, 8 inches (2032 mm) of each wall, measured from the floor. Openings shall be enclosed with any of the following:

1. Insect screening.
2. Approved translucent or transparent plastic not more than 0.125 inch (3.2 mm) in thickness.
3. Glass conforming to the provisions of Section R308.
4. Any combination of the foregoing.

AH103.2 Light, ventilation and emergency egress. Exterior openings required for light and ventilation into a patio structure conforming to Section AH101 shall be unenclosed where such openings serve as emergency egress or rescue openings from sleeping rooms. Where such exterior openings serve as an exit from the dwelling unit, the patio structure, unless unenclosed, shall be provided with exits conforming to the provisions of Section R311 of this code.

SECTION AH104
HEIGHT

AH104.1 Height. Patio covers are limited to one-story structures not exceeding 12 feet (3657 mm) in height.

SECTION AH105
STRUCTURAL PROVISIONS

AH105.1 Design loads. Patio covers shall be designed and constructed to sustain, within the stress limits of this code, all dead loads plus a vertical live load of not less than 10 pounds per square foot (0.48 kN/m^2), except that snow loads shall be used where such snow loads exceed this minimum. Such covers shall be designed to resist the minimum wind loads set forth in Section R301.2.1.

AH105.2 Footings. In areas with a frostline depth of zero as specified in Table R301.2(1), for patio covers supported on a slab-on-grade without footings, the slab shall conform to the provisions of Section R506, shall be not less than 3.5 inches (89 mm) thick and the columns shall not support live and dead loads in excess of 750 pounds (3.34 kN) per column.

SECTION AH106
SPECIAL PROVISIONS FOR ALUMINUM SCREEN ENCLOSURES IN HURRICANE-PRONE REGIONS

AH106.1 General. Screen enclosures in hurricane-prone regions shall be in accordance with the provisions of this section.

AH106.1.1 Habitable spaces. Screen enclosures shall not be considered habitable spaces.

AH106.1.2 Minimum ceiling height. Screen enclosures shall have a ceiling height of not less than 7 feet (2134 mm).

AH106.2 Definition. The following word and term shall, for the purposes of this appendix, have the meaning shown herein.

SCREEN ENCLOSURE. A building or part thereof, in whole or in part self-supporting, and having walls of insect screening, and a roof of insect screening, plastic, aluminum or similar lightweight material.

AH106.3 Screen enclosures. Screen enclosures shall comply with Sections AH106.3.1 and AH106.3.2.

AH106.3.1 Thickness. Actual wall thickness of extruded aluminum members shall be not less than 0.040 inch (1.02 mm).

AH106.3.2 Density. Screen density shall be not more than 20 threads per inch by 20 threads per inch mesh.

AH106.4 Design. The structural design of screen enclosures shall comply with Sections AH106.4.1 through AH106.4.3.

TABLE AH106.4(1)
DESIGN WIND PRESSURES FOR SCREEN ENCLOSURE FRAMING[a, b, e, f, g, h]

LOAD CASE	WALL	ULTIMATE DESIGN WIND SPEED, V_{ult} (mph)									
		100	105	110	120	130	140	150	160	170	180
		Exposure Category B Design Pressure (psf)									
A[c]	Windward and leeward walls (flow thru) and windward wall (nonflow thru) L/W = 0-1	6	7	8	9	11	13	14	16	18	21
A[c]	Windward and leeward walls (flow thru) and windward wall (nonflow thru) L/W = 2	7	8	9	11	12	14	16	19	21	24
B[d]	Windward: Nongable roof	9	10	11	13	15	18	21	23	26	30
B[d]	Windward: Gable roof	11	13	14	16	19	22	26	29	33	37
	ROOF										
All[e]	Roof-screen	2	3	3	3	4	4	5	6	7	7
All[e]	Roof-solid	7	8	8	10	12	13	15	18	20	22

For SI: 1 inch = 25.4 mm, 1 mile per hour = 0.44 m/s, 1 pound per square foot = 0.0479 kPa, 1 foot = 304.8 mm.

a. Design pressure shall be not less than 10 psf in accordance with Section AH106.4.1.

b. Loads are applicable to screen enclosures with a mean roof height of 30 feet or less in Exposure B. For screen enclosures of different heights or exposure, the pressures given shall be adjusted by multiplying the table pressure by the adjustment factor given in Table AH106.4(2).

c. For Load Case A flow thru condition, the pressure given shall be applied simultaneously to both the upwind and downwind screen walls acting in the same direction as the wind. The structure shall be analyzed for wind coming from the opposite direction. For the nonflow thru condition, the screen enclosure wall shall be analyzed for the load applied acting toward the interior of the enclosure.

d. For Load Case B, the table pressure multiplied by the projected frontal area of the screen enclosure is the total drag force, including drag on screen surfaces parallel to the wind, that must be transmitted to the ground. Use Load Case A for members directly supporting the screen surface perpendicular to the wind. Load Case B loads shall be applied only to structural members that carry wind loads from more than one surface.

e. The roof structure shall be analyzed for the pressure given occurring both upward and downward.

f. Table pressures are MWFRS loads. The design of solid roof panels and their attachments shall be based on component and cladding loads for enclosed or partially enclosed structures as appropriate.

g. Table pressures apply to 20-inch by 20-inch by 0.013-inch mesh screen. For 18-inch by 14-inch by 0.013-inch mesh screen, pressures on screen surfaces shall be permitted to be multiplied by 0.88. For screen densities greater than 20 inches by 20 inches by 0.013 inch, pressures for enclosed buildings shall be used.

h. Linear interpolation shall be permitted.

AH106.4.1 Wind load. Structural members supporting screen enclosures shall be designed to support the minimum wind loads given in Tables AH106.4(1) and AH106.4(2) for the ultimate design wind speed, V_{ult}, determined from Figure AH106.4.1. Where any value is less than 10 pounds per square foot (psf) (0.479 kN/m^2) use 10 pounds per square foot (0.479 kN/m^2).

AH106.4.2 Deflection limit. For members supporting screen surfaces only, the total load deflection shall not exceed $l/60$. Screen surfaces shall be permitted to include not more than 25-percent solid flexible finishes.

AH106.4.3 Roof live load. The roof live load shall be not less than 10 psf (0.479 kN/m^2).

AH106.5 Footings. In areas with a frost line depth of zero, screen enclosures supported on a concrete slab-on-grade without footings shall conform to the provisions of Section R506, be not less than $3^1/_2$ inches (89 mm) thick and the columns shall not support loads in excess of 750 pounds (3.36 kN) per column.

TABLE AH106.4(2)
ADJUSTMENT FACTOR FOR BUILDING HEIGHT AND EXPOSURE

MEAN ROOF HEIGHT (feet)	EXPOSURE		
	B	C	D
15	1.00	1.21	1.47
20	1.00	1.29	1.55
25	1.00	1.35	1.61
30	1.00	1.40	1.66
35	1.05	1.45	1.70
40	1.09	1.49	1.74
45	1.12	1.53	1.78
50	1.16	1.56	1.81
55	1.19	1.59	1.84
60	1.22	1.62	1.87

For SI: 1 foot = 304.8 mm.

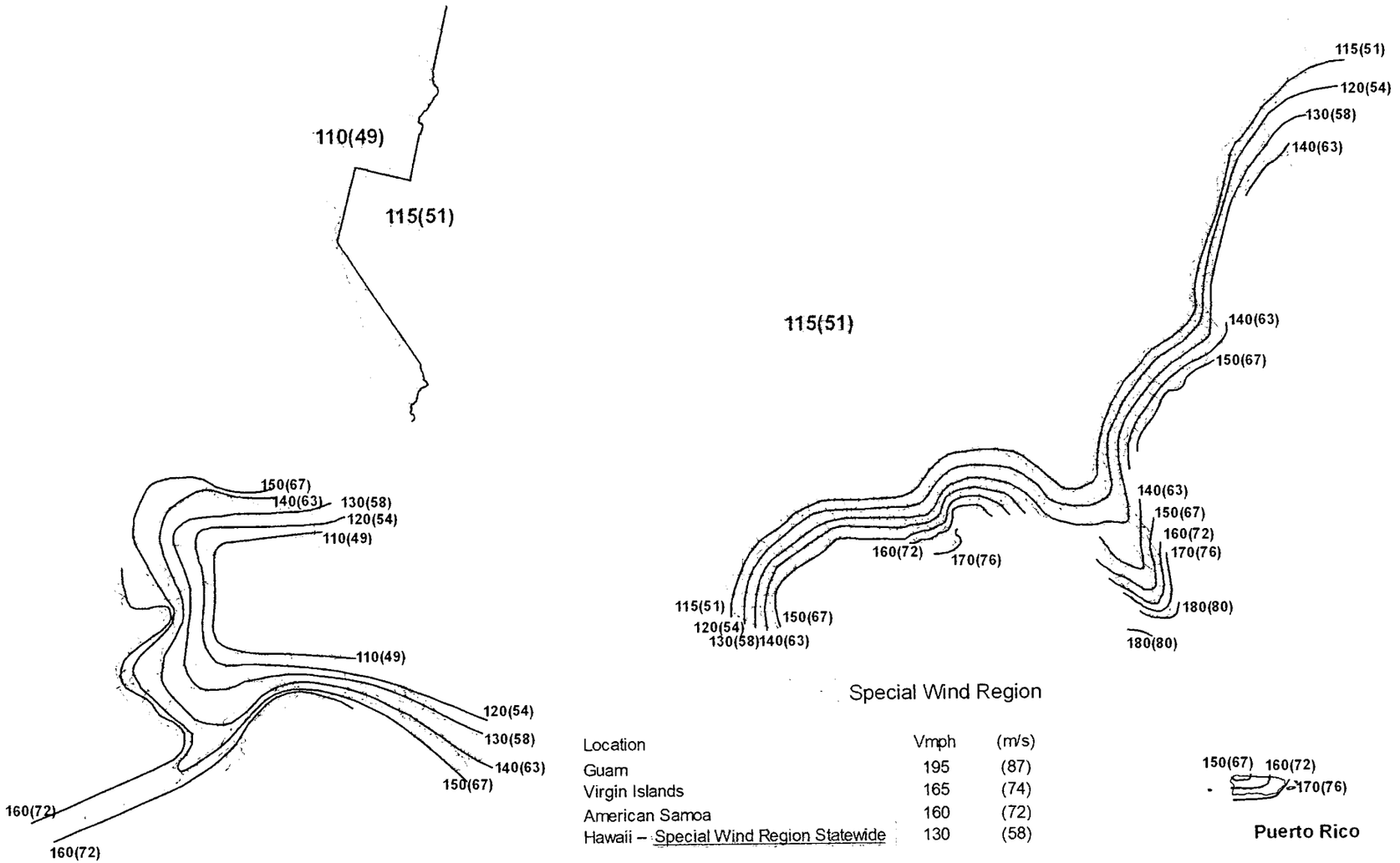

Special Wind Region

Location	Vmph	(m/s)
Guam	195	(87)
Virgin Islands	165	(74)
American Samoa	160	(72)
Hawaii – Special Wind Region Statewide	130	(58)

Notes:
1. Values are nominal design 3-second gust wind speeds in miles per hour (m/s) at 33 ft (10m) above ground for Exposure C category.
2. Linear interpolation between contours is permitted.
3. Islands and coastal areas outside the last contour shall use the last wind speed contour of the coastal area.
4. Mountainous terrain, gorges, ocean promontories, and special wind regions shall be examined for unusual wind conditions.
5. Wind speeds correspond to approximately a 7% probability of exceedance in 50 years (Annual Exceedance Probability = 0.00143, MRI = 700 Years).

FIGURE AH106.4.1
ULTIMATE DESIGN WIND SPEEDS FOR PATIO COVERS AND SCREEN ENCLOSURES

CALIFORNIA RESIDENTIAL CODE – MATRIX ADOPTION TABLE
APPENDIX I – PRIVATE SEWAGE DISPOSAL

(Matrix Adoption Tables are nonregulatory, intended only as an aid to the code user. See Chapter 1 for state agency authority and building applications.)

Adopting agency	BSC	BSC-CG	SFM	HCD			DSA			OSHPD						BSCC	DPH	AGR	DWR	CEC	CA	SL	SLC
				1	2	1/AC	AC	SS	SS/CC	1	1R	2	3	4	5								
Adopt entire chapter																							
Adopt entire chapter as amended (amended sections listed below)																							
Adopt only those sections that are listed below																							
Chapter / Section																							

APPENDIX I

PRIVATE SEWAGE DISPOSAL

The provisions contained in this appendix are not mandatory unless specifically adopted by a state agency or referenced in the adopting ordinance.

User note:

About this appendix: *Appendix I has one simple requirement for indicating that private sewage disposal must be in accordance with the* International Private Sewage Disposal Code®.

SECTION AI101
GENERAL

AI101.1 Scope. Private sewage disposal systems shall conform to the *International Private Sewage Disposal Code.*

CALIFORNIA RESIDENTIAL CODE – MATRIX ADOPTION TABLE
APPENDIX J – EXISTING BUILDINGS AND STRUCTURES

(Matrix Adoption Tables are nonregulatory, intended only as an aid to the code user. See Chapter 1 for state agency authority and building applications.)

Adopting agency	BSC	BSC-CG	SFM	HCD			DSA			OSHPD						BSCC	DPH	AGR	DWR	CEC	CA	SL	SLC
				1	2	1/AC	AC	SS	SS/CC	1	1R	2	3	4	5								
Adopt entire chapter																							
Adopt entire chapter as amended (amended sections listed below)																							
Adopt only those sections that are listed below																							
Chapter / Section																							

APPENDIX J

EXISTING BUILDINGS AND STRUCTURES

The provisions contained in this appendix are not mandatory unless specifically adopted by a state agency or referenced in the adopting ordinance.

User note:

About this appendix: *Appendix J regulates the repair, renovation alteration and reconstruction of existing buildings that are within the scope of this code. It is intended to encourage the continued safe use of existing buildings and ensure that new work conforms to the intent of the code and that exiting conditions remain at their current level of compliance or are improved.*

SECTION AJ101
PURPOSE AND INTENT

AJ101.1 General. The purpose of these provisions is to encourage the continued use or reuse of legally existing buildings and structures. These provisions are intended to permit work in existing buildings that is consistent with the purpose of this code. Compliance with these provisions shall be deemed to meet the requirements of this code.

AJ101.2 Classification of work. For purposes of this appendix, work in existing buildings shall be classified into the categories of repair, renovation, alteration and reconstruction. Specific requirements are established for each category of work in these provisions.

AJ101.3 Multiple categories of work. Work of more than one category shall be part of a single work project. Related work permitted within a 12-month period shall be considered to be a single work project. Where a project includes one category of work in one building area and another category of work in a separate and unrelated area of the building, each project area shall comply with the requirements of the respective category of work. Where a project with more than one category of work is performed in the same area or in related areas of the building, the project shall comply with the requirements of the more stringent category of work.

SECTION AJ102
COMPLIANCE

AJ102.1 General. Regardless of the category of work being performed, the work shall not cause the structure to become unsafe or adversely affect the performance of the building; shall not cause an existing mechanical or plumbing system to become unsafe, hazardous, insanitary or overloaded; and unless expressly permitted by these provisions, shall not make the building any less compliant with this code or to any previously approved alternative arrangements than it was before the work was undertaken.

AJ102.2 Requirements by category of work. Repairs shall conform to the requirements of Section AJ301. Renovations shall conform to the requirements of Section AJ401. Alterations shall conform to the requirements of Section AJ501 and the requirements for renovations. Reconstructions shall conform to the requirements of Section AJ601 and the requirements for alterations and renovations.

AJ102.3 Smoke detectors. Regardless of the category of work, smoke detectors shall be provided where required by Section R314.2.2.

AJ102.4 Replacement windows. Regardless of the category of work, where an existing window, including the sash and glazed portion, or safety glazing is replaced, the replacement

window or safety glazing shall comply with the requirements of Sections AJ102.4.1 through AJ102.4.4, as applicable.

AJ102.4.1 Energy efficiency. Replacement windows shall comply with the requirements of Chapter 11.

AJ102.4.2 Safety glazing. Replacement glazing in hazardous locations shall comply with the safety glazing requirements of Section R308.

AJ102.4.3 Emergency escape and rescue openings. Where windows are required to provide emergency escape and rescue openings, replacement windows shall be exempt from the maximum sill height requirements of Section R310.2.2 and the requirements of Sections R310.2.1 and R310.2.3 provided that the replacement window meets the following conditions:

1. The replacement window is the manufacturer's largest standard size window that will fit within the existing frame or existing rough opening. The replacement window shall be permitted to be of the same operating style as the existing window or a style that provides for an equal or greater window opening area than the existing window.
2. The replacement window is not part of a change of occupancy.
3. Window opening control devices complying with ASTM F2090 shall be permitted for use on windows required to provide emergency escape and rescue openings.

AJ102.4.4 Window control devices. Where window fall prevention devices complying with ASTM F2090 are not provided, window opening control devices complying with ASTM F2090 shall be installed where an existing window is replaced and where all of the following apply to the replacement window:

1. The window is operable.
2. The window replacement includes replacement of the sash and the frame.
3. The top of the sill of the window opening is at a height less than 24 inches (610 mm) above the finished floor.
4. The window will permit openings that will allow passage of a 4-inch-diameter (102 mm) sphere where the window is in its largest opened position.
5. The vertical distance from the top of the sill of the window opening to the finished grade or other surface below, on the exterior of the building, is greater than 72 inches (1829 mm).

The window opening control device, after operation to release the control device allowing the window to fully open, shall not reduce the minimum net clear opening area of the window unit.

AJ102.5 Flood hazard areas. Work performed in existing buildings located in a flood hazard area as established by Table R301.2(1) shall be subject to the provisions of Section R105.3.1.1.

AJ102.6 Equivalent alternatives. Work performed in accordance with the *California Existing Building Code* shall be deemed to comply with the provisions of this appendix. These provisions are not intended to prevent the use of any alternative material, alternative design or alternative method of construction not specifically prescribed herein, provided that any alternative has been deemed to be equivalent and its use authorized by the building official.

AJ102.7 Other alternatives. Where compliance with these provisions or with this code as required by these provisions is technically infeasible or would impose disproportionate costs because of construction or dimensional difficulties, the building official shall have the authority to accept alternatives. These alternatives include materials, design features and operational features.

AJ102.8 More restrictive requirements. Buildings or systems in compliance with the requirements of this code for new construction shall not be required to comply with any more restrictive requirement of these provisions.

AJ102.9 Features exceeding code requirements. Elements, components and systems of existing buildings with features that exceed the requirements of this code for new construction, and are not otherwise required as part of approved alternative arrangements or deemed by the building official to be required to balance other building elements not complying with this code for new construction, shall not be prevented by these provisions from being modified as long as they remain in compliance with the applicable requirements for new construction.

SECTION AJ103
PRELIMINARY MEETING

AJ103.1 General. If a building permit is required at the request of the prospective permit applicant, the building official or his or her designee shall meet with the prospective applicant to discuss plans for any proposed work under these provisions prior to the application for the permit. The purpose of this preliminary meeting is for the building official to gain an understanding of the prospective applicant's intentions for the proposed work, and to determine, together with the prospective applicant, the specific applicability of these provisions.

SECTION AJ104
EVALUATION OF AN EXISTING BUILDING

AJ104.1 General. The building official shall have the authority to require an existing building to be investigated and evaluated by a registered design professional in the case of proposed reconstruction of any portion of a building. The evaluation shall determine the existence of any potential nonconformities to these provisions, and shall provide a basis for determining the impact of the proposed changes on the performance of the building. The evaluation shall use the following sources of information, as applicable:

1. Available documentation of the existing building.
    1.1. Field surveys.

1.2. Tests (nondestructive and destructive).

1.3. Laboratory analysis.

Exception: Detached one- or two-family dwellings that are not irregular buildings under Section R301.2.2.2.5 and are not undergoing an extensive reconstruction shall not be required to be evaluated.

SECTION AJ105
PERMIT

AJ105.1 Identification of work area. The work area shall be clearly identified on the permits issued under these provisions.

SECTION AJ201
DEFINITIONS

AJ201.1 General. For purposes of this appendix, the terms used are defined as follows.

ALTERATION. The reconfiguration of any space; the addition or elimination of any door or window; the reconfiguration or extension of any system; or the installation of any additional equipment.

CATEGORIES OF WORK. The nature and extent of construction work undertaken in an existing building. The categories of work covered in this appendix, listed in increasing order of stringency of requirements, are repair, renovation, alteration and reconstruction.

DANGEROUS. Where the stresses in any member; the condition of the building, or any of its components or elements or attachments; or other condition that results in an overload exceeding 150 percent of the stress allowed for the member or material in this code.

EQUIPMENT OR FIXTURE. Any plumbing, heating, electrical, ventilating, air-conditioning, refrigerating and fire protection equipment; and elevators, dumb waiters, boilers, pressure vessels, and other mechanical facilities or installations that are related to building services.

MATERIALS AND METHODS REQUIREMENTS. Those requirements in this code that specify material standards; details of installation and connection; joints; penetrations; and continuity of any element, component or system in the building. The required quantity, fire resistance, flame spread, acoustic or thermal performance, or other performance attribute is specifically excluded from materials and methods requirements.

RECONSTRUCTION. The reconfiguration of a space that affects an exit, a renovation or alteration where the work area is not permitted to be occupied because existing means-of-egress and fire protection systems, or their equivalent, are not in place or continuously maintained; or there are extensive alterations as defined in Section AJ501.3.

REHABILITATION. Any repair, renovation, alteration or reconstruction work undertaken in an existing building.

RENOVATION. The change, strengthening or addition of load-bearing elements; or the refinishing, replacement, bracing, strengthening, upgrading or extensive repair of existing materials, elements, components, equipment or fixtures. Renovation does not involve reconfiguration of spaces. Interior and exterior painting are not considered refinishing for purposes of this definition, and are not renovation.

REPAIR. The patching, restoration or minor replacement of materials, elements, components, equipment or fixtures for the purposes of maintaining those materials, elements, components, equipment or fixtures in good or sound condition.

WORK AREA. That portion of a building affected by any renovation, alteration or reconstruction work as initially intended by the owner and indicated as such in the permit. Work area excludes other portions of the building where incidental work entailed by the intended work must be performed, and portions of the building where work not initially intended by the owner is specifically required by these provisions for a renovation, alteration or reconstruction.

SECTION AJ301
REPAIRS

AJ301.1 Materials. Except as otherwise required herein, work shall be done using like materials or materials permitted by this code for new construction.

AJ301.1.1 Hazardous materials. Hazardous materials no longer permitted, such as asbestos and lead-based paint, shall not be used.

AJ301.1.2 Plumbing materials and supplies. The following plumbing materials and supplies shall not be used:

1. All-purpose solvent cement, unless listed for the specific application.
2. Flexible traps and tailpieces, unless listed for the specific application.
3. Solder having more than 0.2-percent lead in the repair of potable water systems.

AJ301.2 Water closets. Where any water closet is replaced with a newly manufactured water closet, the replacement water closet shall comply with the requirements of Section P2903.2.

AJ301.3 Electrical. Repair or replacement of existing electrical wiring and equipment undergoing repair with like material shall be permitted.

Exceptions:

1. Replacement of electrical receptacles shall comply with the requirements of Chapters 34 through 43.
2. Plug fuses of the Edison-base type shall be used for replacements only where there is not evidence of overfusing or tampering in accordance with the applicable requirements of Chapters 34 through 43.
3. For replacement of nongrounding-type receptacles with grounding-type receptacles and for branch circuits that do not have an equipment grounding conductor in the branch circuitry, the grounding conductor of a grounding-type receptacle outlet shall be permitted to be grounded to any accessible point on the grounding electrode system, or to any accessible point on the grounding electrode conductor, as allowed and described in Chapters 34 through 43.

SECTION AJ401
RENOVATIONS

AJ401.1 Materials and methods. The work shall comply with the materials and methods requirements of this code.

AJ401.2 Door and window dimensions. Minor reductions in the clear opening dimensions of replacement doors and windows that result from the use of different materials shall be allowed, whether or not they are permitted by this code.

AJ401.3 Interior finish. Wood paneling and textile wall coverings used as an interior finish shall comply with the flame spread requirements of Section R302.9.

AJ401.4 Structural. Unreinforced masonry buildings located in Seismic Design Category D_2 or E shall have parapet bracing and wall anchors installed at the roofline whenever a reroofing permit is issued. Such parapet bracing and wall anchors shall be of an approved design.

SECTION AJ501
ALTERATIONS

AJ501.1 Newly constructed elements. Newly constructed elements, components and systems shall comply with the requirements of this code.

Exceptions:

1. Added openable windows are not required to comply with the light and ventilation requirements of Section R303.
2. Newly installed electrical equipment shall comply with the requirements of Section AJ501.5.

AJ501.2 Nonconformities. The work shall not increase the extent of noncompliance with the requirements of Section AJ601, or create nonconformity to those requirements that did not previously exist.

AJ501.3 Extensive alterations. Where the total area of all of the work areas included in an alteration exceeds 50 percent of the area of the dwelling unit, the work shall be considered to be a reconstruction and shall comply with the requirements of these provisions for reconstruction work.

Exception: Work areas in which the alteration work is exclusively plumbing, mechanical or electrical shall not be included in the computation of the total area of all work areas.

AJ501.4 Structural. The minimum design loads for the structure shall be the loads applicable at the time the building was constructed, provided that a dangerous condition is not created. Structural elements that are uncovered during the course of the alteration and that are found to be unsound or dangerous shall be made to comply with the applicable requirements of this code.

AJ501.5 Electrical equipment and wiring.

AJ501.5.1 Materials and methods. Newly installed electrical equipment and wiring relating to work done in any work area shall comply with the materials and methods requirements of Chapters 34 through 43.

Exception: Electrical equipment and wiring in newly installed partitions and ceilings shall comply with the applicable requirements of Chapters 34 through 43.

AJ501.5.2 Electrical service. Service to the dwelling unit shall be not less than 100 ampere, three-wire capacity and service equipment shall be dead front having no live parts exposed that could allow accidental contact. Type "S" fuses shall be installed where fused equipment is used.

Exception: Existing service of 60 ampere, three-wire capacity, and feeders of 30 ampere or larger two- or three-wire capacity shall be accepted if adequate for the electrical load being served.

AJ501.5.3 Additional electrical requirements. Where the work area includes any of the following areas within a dwelling unit, the requirements of Sections AJ501.5.3.1 through AJ501.5.3.5 shall apply.

AJ501.5.3.1 Enclosed areas. Enclosed areas other than closets, kitchens, basements, garages, hallways, laundry areas and bathrooms shall have not less than two duplex receptacle outlets, or one duplex receptacle outlet and one ceiling- or wall-type lighting outlet.

AJ501.5.3.2 Kitchen and laundry areas. Kitchen areas shall have not less than two duplex receptacle outlets. Laundry areas shall have not less than one duplex receptacle outlet located near the laundry equipment and installed on an independent circuit.

AJ501.5.3.3 Ground-fault circuit-interruption. Ground-fault circuit-interruption shall be provided on newly installed receptacle outlets if required by Chapters 34 through 43.

AJ501.5.3.4 Lighting outlets. Not less than one lighting outlet shall be provided in every bathroom, hallway, stairway, attached garage and detached garage with electric power to illuminate outdoor entrances and exits, and in utility rooms and basements where these spaces are used for storage or contain equipment requiring service.

AJ501.5.3.5 Clearance. Clearance for electrical service equipment shall be provided in accordance with Chapters 34 through 43.

AJ501.6 Ventilation. Reconfigured spaces intended for occupancy and spaces converted to habitable or occupiable space in any work area shall be provided with ventilation in accordance with Section R303.

AJ501.7 Ceiling height. Habitable spaces created in existing basements shall have ceiling heights of not less than 6 feet, 8 inches (2032 mm), except that the ceiling height at obstructions shall be not less than 6 feet 4 inches (1930 mm) from the basement floor. Existing finished ceiling heights in nonhabitable spaces in basements shall not be reduced.

AJ501.8 Stairs.

AJ501.8.1 Stair width. Existing basement stairs and handrails not otherwise being altered or modified shall be permitted to maintain their current clear width at, above and below existing handrails.

AJ501.8.2 Stair headroom. Headroom height on existing basement stairs being altered or modified shall not be reduced below the existing stairway finished headroom. Existing basement stairs not otherwise being altered shall be permitted to maintain the current finished headroom.

AJ501.8.3 Stair landing. Landings serving existing basement stairs being altered or modified shall not be reduced below the existing stairway landing depth and width. Existing basement stairs not otherwise being altered shall be permitted to maintain the current landing depth and width.

SECTION AJ601
RECONSTRUCTION

AJ601.1 Stairways, handrails and guards.

AJ601.1.1 Stairways. Stairways within the work area shall be provided with illumination in accordance with Section R303.6.

AJ601.1.2 Handrails. Every required exit stairway that has four or more risers, is part of the means of egress for any work area, and is not provided with not fewer than one handrail, or in which the existing handrails are judged to be in danger of collapsing, shall be provided with handrails designed and installed in accordance with Section R311 for the full length of the run of steps on not less than one side.

AJ601.1.3 Guards. Every open portion of a stair, landing or balcony that is more than 30 inches (762 mm) above the floor or grade below, is part of the egress path for any work area, and does not have guards, or in which the existing guards are judged to be in danger of collapsing, shall be provided with guards designed and installed in accordance with Section R312.

AJ601.2 Wall and ceiling finish. The interior finish of walls and ceilings in any work area shall comply with the requirements of Section R302.9. Existing interior finish materials that do not comply with those requirements shall be removed or shall be treated with an approved fire-retardant coating in accordance with the manufacturer's instructions to secure compliance with the requirements of this section.

AJ601.3 Separation walls. Where the work area is in an attached dwelling unit, walls separating dwelling units that are not continuous from the foundation to the underside of the roof sheathing shall be constructed to provide a continuous fire separation using construction materials consistent with the existing wall or complying with the requirements for new structures. Performance of work shall be required only on the side of the wall of the dwelling unit that is part of the work area.

AJ601.4 Ceiling height. Habitable spaces created in existing basements shall have ceiling heights of not less than 6 feet, 8 inches (2032 mm), except that the ceiling height at obstructions shall be not less than 6 feet 4 inches (1930 mm) from the basement floor. Existing finished ceiling heights in nonhabitable spaces in basements shall not be reduced.

SECTION AJ701
REFERENCED STANDARDS

ASTM F2090—17	Specification for Window Fall Prevention Devices with Emergency Escape (Egress) Release Mechanisms	AJ102.4.3 AJ102.4.4
IEBC—18	*International Existing Building Code*®	AJ102.6

CALIFORNIA RESIDENTIAL CODE – MATRIX ADOPTION TABLE
APPENDIX K – SOUND TRANSMISSION

(Matrix Adoption Tables are nonregulatory, intended only as an aid to the code user. See Chapter 1 for state agency authority and building applications.)

Adopting agency	BSC	BSC-CG	SFM	HCD			DSA			OSHPD						BSCC	DPH	AGR	DWR	CEC	CA	SL	SLC
				1	2	1/AC	AC	SS	SS/CC	1	1R	2	3	4	5								
Adopt entire chapter																							
Adopt entire chapter as amended (amended sections listed below)																							
Adopt only those sections that are listed below																							
Chapter / Section																							

APPENDIX K

SOUND TRANSMISSION

The provisions contained in this appendix are not mandatory unless specifically adopted by a state agency or referenced in the adopting ordinance.

See Section 1206 "Sound Transmission" of the California Building Code, Title 24, Part 2, for requirements applicable to structures in this code.

User note:

About this appendix: *Sound transmission relates directly to the psychological and long-term physical well-being of building occupants. Many human activities cannot be accommodated efficiently or comfortably in various types of building spaces without proper attention to the mitigation of sound transmission from other spaces within the building, or from outside of the building. In Appendix K, attention is specifically paid to the mitigation of sound transmission between dwelling units and other dwelling units and occupancies.*

SECTION AK101
GENERAL

AK101.1 General. Wall and floor-ceiling assemblies separating dwelling units, including those separating adjacent townhouse units, shall provide airborne sound insulation for walls, and both airborne and impact sound insulation for floor-ceiling assemblies.

SECTION AK102
AIRBORNE SOUND

AK102.1 General. Airborne sound insulation for wall and floor-ceiling assemblies shall meet a sound transmission class (STC) rating of 45 when tested in accordance with ASTM E90. Penetrations or openings in construction assemblies for piping; electrical devices; recessed cabinets; bathtubs; soffits; or heating, ventilating or exhaust ducts shall be sealed, lined, insulated or otherwise treated to maintain the required ratings. Dwelling unit entrance doors, which share a common space, shall be tight fitting to the frame and sill.

AK102.1.1 Masonry. The sound transmission class of concrete masonry and clay masonry assemblies shall be calculated in accordance with TMS 0302 or determined through testing in accordance with ASTM E90.

SECTION AK103
STRUCTURAL-BORNE SOUND

AK103.1 General. Floor/ceiling assemblies between dwelling units, or between a dwelling unit and a public or service area within a structure, shall have an impact insulation class (IIC) rating of not less than 45 when tested in accordance with ASTM E492.

SECTION AK104
REFERENCED STANDARDS

ASTM E90—09	Test Method for Laboratory Measurement of Airborne Sound Transmission Loss of Building Partitions and Elements	AK102.1 AK102.1.1

ASTM E492—09	Specification for Laboratory Measurement of Impact Sound Transmission through Floor-ceiling Assemblies Using the Tapping Machine	AK103.1
TMS 0302—12	Standard for Determining the Sound Transmission Class Rating for Masonry Walls	AK102.1.1

CALIFORNIA RESIDENTIAL CODE – MATRIX ADOPTION TABLE
APPENDIX L – PERMIT FEES

(Matrix Adoption Tables are nonregulatory, intended only as an aid to the code user. See Chapter 1 for state agency authority and building applications.)

Adopting agency	BSC	BSC-CG	SFM	HCD			DSA			OSHPD						BSCC	DPH	AGR	DWR	CEC	CA	SL	SLC
				1	2	1/AC	AC	SS	SS/CC	1	1R	2	3	4	5								
Adopt entire chapter																							
Adopt entire chapter as amended (amended sections listed below)																							
Adopt only those sections that are listed below																							
Chapter / Section																							

APPENDIX L

PERMIT FEES

The provisions contained in this appendix are not mandatory unless specifically adopted by a state agency or referenced in the adopting ordinance.

User note:

About this appendix: *Appendix L is intended to provide guidance to building departments in their efforts to set fees for building permits. This appendix provides examples that may be used as a reference when setting fee schedules and are not intended to be literally applied.*

TOTAL VALUATION	FEE
$1 to $500	$24
$501 to $2,000	$24 for the first $500; plus $3 for each additional $100 or fraction thereof, up to and including $2,000
$2,001 to $40,000	$69 for the first $2,000; plus $11 for each additional $1,000 or fraction thereof, up to and including $40,000
$40,001 to $100,000	$487 for the first $40,000; plus $9 for each additional $1,000 or fraction thereof, up to and including $100,000
$100,001 to $500,000	$1,027 for the first $100,000; plus $7 for each additional $1,000 or fraction thereof, up to and including $500,000
$500,001 to $1,000,000	$3,827 for the first $500,000; plus $5 for each additional $1,000 or fraction thereof, up to and including $1,000,000
$1,000,001 to $5,000,000	$6,327 for the first $1,000,000; plus $3 for each additional $1,000 or fraction thereof, up to and including $5,000,000
$5,000,001 and over	$18,327 for the first $5,000,000; plus $1 for each additional $1,000 or fraction thereof

APPENDIX M

RESERVED

APPENDIX N

RESERVED

CALIFORNIA RESIDENTIAL CODE – MATRIX ADOPTION TABLE
APPENDIX O – AUTOMATIC VEHICULAR GATES

(Matrix Adoption Tables are nonregulatory, intended only as an aid to the code user. See Chapter 1 for state agency authority and building applications.)

Adopting agency	BSC	BSC-CG	SFM	HCD			DSA			OSHPD						BSCC	DPH	AGR	DWR	CEC	CA	SL	SLC
				1	2	1/AC	AC	SS	SS/CC	1	1R	2	3	4	5								
Adopt entire chapter																							
Adopt entire chapter as amended (amended sections listed below)																							
Adopt only those sections that are listed below																							
Chapter / Section																							

APPENDIX O

AUTOMATIC VEHICULAR GATES

The provisions contained in this appendix are not mandatory unless specifically adopted by a state agency or referenced in the adopting ordinance.

User note:

About this appendix: *Appendix O provides requirements for automatic vehicular gates, including a definition of and references to standards that regulate such gates.*

SECTION AO101
GENERAL

AO101.1 General. The provisions of this appendix shall control the design and construction of automatic vehicular gates installed on the lot of a one- or two-family dwelling.

SECTION AO102
DEFINITION

AO102.1 General. The following term shall, for the purposes of this appendix, have the meaning shown herein.

VEHICULAR GATE. A gate that is intended for use at a vehicular entrance or exit to the lot of a one- or two-family dwelling, and that is not intended for use by pedestrian traffic.

SECTION AO103
AUTOMATIC VEHICULAR GATES

AO103.1 Vehicular gates intended for automation. Vehicular gates intended for automation shall be designed, constructed and installed to comply with the requirements of ASTM F2200.

AO103.2 Vehicular gate openers. Vehicular gate openers, where provided, shall be listed in accordance with UL 325.

SECTION AO104
REFERENCED STANDARDS

ASTM F2200—14	Standard Specification for Automated Vehicular Gate Construction	AO103.1
UL 325—02	Door, Drapery, Gate, Louver and Window Operations and Systems—with revisions through May 2015	AO103.2

APPENDIX P

RESERVED

CALIFORNIA RESIDENTIAL CODE – MATRIX ADOPTION TABLE
APPENDIX Q – TINY HOUSES

(Matrix Adoption Tables are nonregulatory, intended only as an aid to the code user. See Chapter 1 for state agency authority and building applications.)

Adopting agency	BSC	BSC-CG	SFM	HCD			DSA			OSHPD						BSCC	DPH	AGR	DWR	CEC	CA	SL	SLC
				1	2	1/AC	AC	SS	SS/CC	1	1R	2	3	4	5								
Adopt entire chapter				X	X																		
Adopt entire chapter as amended (amended sections listed below)																							
Adopt only those sections that are listed below																							
Chapter / Section																							

APPENDIX Q

TINY HOUSES

This provisions contained in this appendix are not mandatory unless specifically adopted by a state agency or referenced in the adopting ordinance.

User note:

About this appendix: *Appendix Q relaxes various requirements in the body of the code as they apply to houses that are 400 square feet in area or less. Attention is specifically paid to features such as compact stairs, including stair handrails and headroom, ladders, reduced ceiling heights in lofts and guard and emergency escape and rescue opening requirements at lofts.*

SECTION AQ101
GENERAL

AQ101.1 Scope. This appendix shall be applicable to tiny houses used as single dwelling units. Tiny houses shall comply with this code except as otherwise stated in this appendix.

SECTION AQ102
DEFINITIONS

AQ102.1 General. The following words and terms shall, for the purposes of this appendix, have the meanings shown herein. Refer to Chapter 2 of this code for general definitions.

EGRESS ROOF ACCESS WINDOW. A skylight or roof window designed and installed to satisfy the emergency escape and rescue opening requirements of Section R310.2.

LANDING PLATFORM. A landing provided as the top step of a stairway accessing a loft.

LOFT. A floor level located more than 30 inches (762 mm) above the main floor, open to the main floor on one or more sides with a ceiling height of less than 6 feet 8 inches (2032 mm) and used as a living or sleeping space.

TINY HOUSE. A dwelling that is 400 square feet (37 m^2) or less in floor area excluding lofts.

SECTION AQ103
CEILING HEIGHT

AQ103.1 Minimum ceiling height. Habitable space and hallways in tiny houses shall have a ceiling height of not less than 6 feet 8 inches (2032 mm). Bathrooms, toilet rooms and kitchens shall have a ceiling height of not less than 6 feet 4 inches (1930 mm). Obstructions including, but not limited to, beams, girders, ducts and lighting, shall not extend below these minimum ceiling heights.

Exception: Ceiling heights in lofts are permitted to be less than 6 feet 8 inches (2032 mm).

SECTION AQ104
LOFTS

AQ104.1 Minimum loft area and dimensions. Lofts used as a sleeping or living space shall meet the minimum area and dimension requirements of Sections AQ104.1.1 through AQ104.1.3.

AQ104.1.1 Minimum area. Lofts shall have a floor area of not less than 35 square feet (3.25 m^2).

AQ104.1.2 Minimum dimensions. Lofts shall be not less than 5 feet (1524 mm) in any horizontal dimension.

AQ104.1.3 Height effect on loft area. Portions of a loft with a sloped ceiling measuring less than 3 feet (914 mm) from the finished floor to the finished ceiling shall not be considered as contributing to the minimum required area for the loft.

Exception: Under gable roofs with a minimum slope of 6 units vertical in 12 units horizontal (50-percent slope), portions of a loft with a sloped ceiling measuring less than 16 inches (406 mm) from the finished floor to the finished ceiling shall not be considered as contributing to the minimum required area for the loft.

AQ104.2 Loft access. The access to and primary egress from lofts shall be of any type described in Sections AQ104.2.1 through AQ104.2.4.

AQ104.2.1 Stairways. Stairways accessing lofts shall comply with this code or with Sections AQ104.2.1.1 through AQ104.2.1.5.

AQ104.2.1.1 Width. Stairways accessing a loft shall not be less than 17 inches (432 mm) in clear width at or above the handrail. The width below the handrail shall be not less than 20 inches (508 mm).

AQ104.2.1.2 Headroom. The headroom in stairways accessing a loft shall be not less than 6 feet 2 inches (1880 mm), as measured vertically, from a sloped line connecting the tread or landing platform nosings in the middle of their width.

AQ104.2.1.3 Treads and risers. Risers for stairs accessing a loft shall be not less than 7 inches (178 mm) and not more than 12 inches (305 mm) in height. Tread depth and riser height shall be calculated in accordance with one of the following formulas:

1. The tread depth shall be 20 inches (508 mm) minus four-thirds of the riser height.
2. The riser height shall be 15 inches (381 mm) minus three-fourths of the tread depth.

AQ104.2.1.4 Landing platforms. The top tread and riser of stairways accessing lofts shall be constructed as a landing platform where the loft ceiling height is less than 6 feet 2 inches (1880 mm) where the stairway meets the loft. The landing platform shall be 18 inches to 22 inches (457 to 559 mm) in depth measured from the nosing of the landing platform to the edge of the loft, and 16 to 18 inches (406 to 457 mm) in height measured from the landing platform to the loft floor.

AQ104.2.1.5 Handrails. Handrails shall comply with Section R311.7.8.

AQ104.2.1.6 Stairway guards. Guards at open sides of stairways shall comply with Section R312.1.

AQ104.2.2 Ladders. Ladders accessing lofts shall comply with Sections AQ104.2.1 and AQ104.2.2.

AQ104.2.2.1 Size and capacity. Ladders accessing *lofts* shall have a rung width of not less than 12 inches (305 mm), and 10-inch (254 mm) to 14-inch (356 mm) spacing between rungs. Ladders shall be capable of supporting a 200-pound (75 kg) load on any rung. Rung spacing shall be uniform within $^3/_8$ inch (9.5 mm).

AQ104.2.2.2 Incline. Ladders shall be installed at 70 to 80 degrees from horizontal.

AQ104.2.3 Alternating tread devices. Alternating tread devices accessing lofts shall comply with Sections R311.7.11.1 and R311.7.11.2. The clear width at and below the handrails shall be not less than 20 inches (508 mm).

AQ104.2.4 Ships ladders. Ships ladders accessing lofts shall comply with Sections R311.7.12.1 and R311.7.12.2. The clear width at and below handrails shall be not less than 20 inches (508 mm).

AQ104.2.5 Loft guards. Loft guards shall be located along the open side of lofts. Loft guards shall be not less than 36 inches (914 mm) in height or one-half of the clear height to the ceiling, whichever is less.

SECTION AQ105
EMERGENCY ESCAPE AND RESCUE OPENINGS

AQ105.1 General. Tiny houses shall meet the requirements of Section R310 for emergency escape and rescue openings.

Exception: Egress roof access windows in lofts used as sleeping rooms shall be deemed to meet the requirements of Section R310 where installed such that the bottom of the opening is not more than 44 inches (1118 mm) above the loft floor, provided the egress roof access window complies with the minimum opening area requirements of Section R310.2.1.

CALIFORNIA RESIDENTIAL CODE – MATRIX ADOPTION TABLE
APPENDIX R – LIGHT STRAW-CLAY CONSTRUCTION

(Matrix Adoption Tables are nonregulatory, intended only as an aid to the code user. See Chapter 1 for state agency authority and building applications.)

Adopting agency	BSC	BSC -CG	SFM	HCD			DSA			OSHPD						BSCC	DPH	AGR	DWR	CEC	CA	SL	SLC
				1	2	1/AC	AC	SS	SS/ CC	1	1R	2	3	4	5								
Adopt entire chapter																							
Adopt entire chapter as amended (amended sections listed below)																							
Adopt only those sections that are listed below																							
Chapter / Section																							

APPENDIX R

LIGHT STRAW-CLAY CONSTRUCTION

The provisions contained in this appendix are not mandatory unless specifically adopted by a state agency or referenced in the adopting ordinance.

User note:

About this appendix: *While heavier forms of straw-clay construction have been used in various parts of the world for thousands of years, light forms of straw-clay construction began to appear in Europe in 1950 and in the United States in 1990. These lighter forms of straw-clay construction are intended as infill materials in nonload-bearing walls. The advantages of light straw-clay construction, such as regulated by Appendix R, include thermal performance and low environmental impact.*

SECTION AR101
GENERAL

AR101.1 Scope. This appendix shall govern the use of light straw-clay as a nonbearing building material and wall infill system in Seismic Design Categories A and B. Use of light straw-clay in Seismic Design Categories C, D_0, D_1 and D_2 shall require an approved engineered design by a registered design professional in accordance with Section R301.1.3.

SECTION AR102
DEFINITIONS

AR102.1 General. The following words and terms shall, for the purposes of this appendix, have the meanings shown herein. Refer to Chapter 2 for general definitions.

CLAY. Inorganic soil with particle sizes of less than 0.00008 inch (0.002 mm) having the characteristics of high to very high dry strength and medium to high plasticity.

CLAY SLIP. A suspension of clay subsoil in water.

CLAY SUBSOIL. Subsoil sourced directly from the earth or refined, containing clay and free from organic matter.

INFILL. Light straw-clay that is placed between the structural and nonstructural members of a building.

LIGHT STRAW-CLAY. A mixture of straw and clay slip compacted and dried to form insulation and plaster substrate between or around structural and nonstructural members in a wall.

NONBEARING. Not bearing the weight of the building other than the weight of the light straw-clay itself and its finish.

STRAW. The dry stems of cereal grains after the seed heads have been removed.

VOID. Any space in a light straw-clay wall wider than $^1/_4$ inch (6 mm), greater than 2 inches (51 mm) in horizontal length and greater than 2 inches (51 mm) in depth.

SECTION AR103
NONBEARING LIGHT STRAW-CLAY CONSTRUCTION

AR103.1 General. Light straw-clay shall be limited to infill between or around structural and nonstructural wall framing members.

AR103.2 Structure. The structure of buildings using light straw-clay shall be in accordance with the *California Residential Code* or shall be in accordance with an approved design by a registered design professional.

AR103.2.1 Number of stories. Use of light straw-clay infill shall be limited to buildings that are not more than one story above grade plane.

Exception: Buildings using light straw-clay infill that are greater than one story above grade plane shall be in accordance with an approved design by a registered design professional.

AR103.2.2 Bracing. Bracing for buildings with light straw-clay infill shall be in accordance with Section R602.10. Walls with light straw-clay infill shall use Method LIB and shall not be sheathed with solid sheathing. Walls without light straw-clay infill shall comply with any bracing method prescribed by this code.

AR103.2.3 Requirements and properties of light straw-clay mixtures. The requirements and properties of light straw-clay mixtures shall be in accordance with Table AR103.2.3.

TABLE AR103.2.3
REQUIREMENTS AND PROPERTIES OF LIGHT STRAW-CLAY MIXTURES[a]

Density (pcf)	Straw (pcf)	Subsoil (pcf)	Water (gal/cf)[b]	Min.% clay in subsoil	Minimum clay: silt ratio	Subsoil testing method[c, d]	Max. wall thickness, inches	R-value (hr/F°/cf/BTU/inch)
10	6.7	3.3	1.55	70	3.5:1	A	15	1.80
12	6.7	5.3	1.63	46	1.7:1	A	15	1.72
13	6.7	6.3	1.67	40	1.33:1	A	15	1.69
15	6.7	8.3	1.74	35	0.95:1	A	15	1.63
20	6.7	13.3	1.93	30	0.60:1	A	12	1.48
30	6.7	23.3	2.31	NA	NA	B	12	1.22
40	6.7	33.3	2.70	NA	NA	B	12	1.01
50	6.7	43.3	3.08	NA	NA	B	12	0.84

©Douglas Piltingsrud and StrawClay.org. Used by permission.

a. Interpolation permitted. Extrapolation not permitted.
b. Water mixed with subsoil equals clay slip.
c. Subsoil Testing Methods:
A. Lab test for percent of clay, silt and sand via hydrometer method.
B. Ribbon Test or the Figure 3 Ball Test in the Appendix of ASTM E2392/E2392M.
d. Trace amounts of organic materials are acceptable.

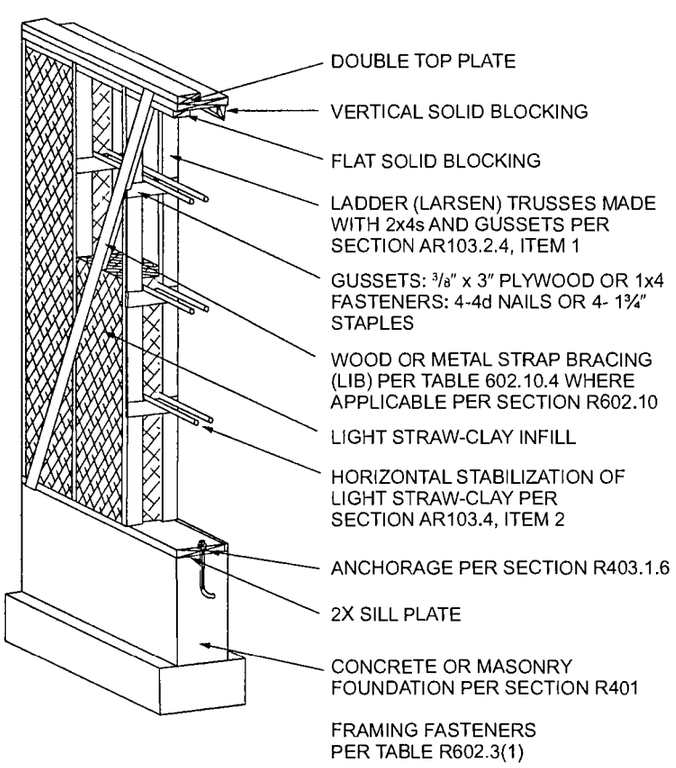

FIGURE AR103.2.4(1)
LIGHT STRAW-CLAY WALL WITH LARSEN TRUSSES

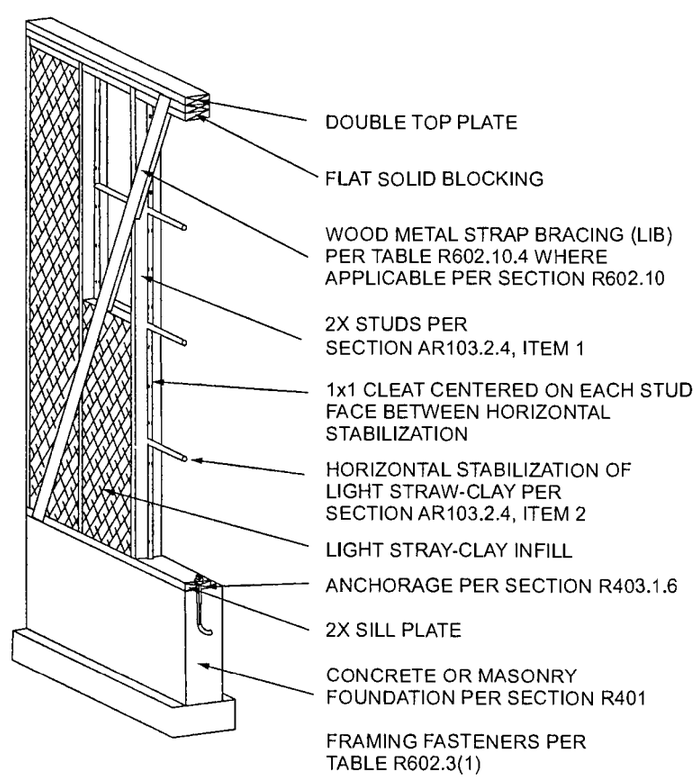

FIGURE AR103.2.4(2)
LIGHT STRAW-CLAY WALL SINGLE STUD WIDTH

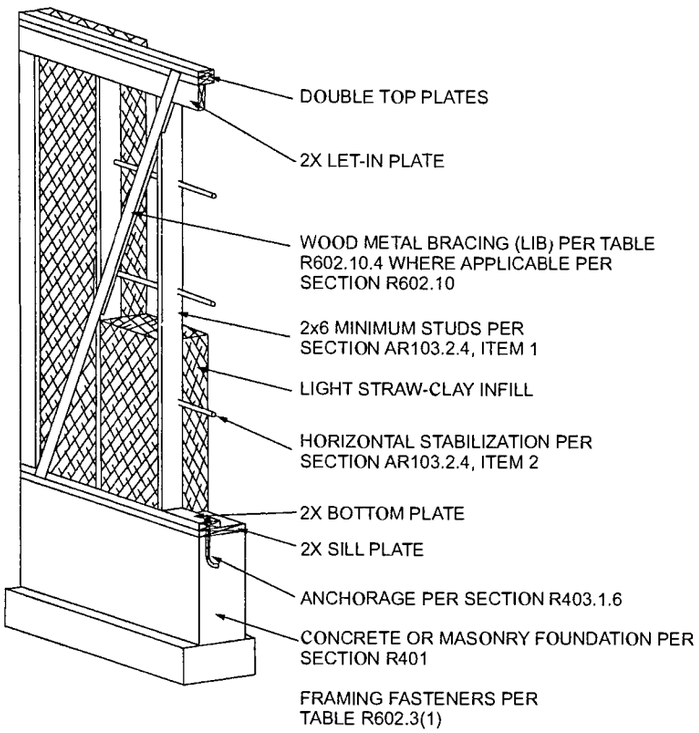

FIGURE AR103.2.4(3)
LIGHT STRAW-CLAY WALL WITH BLIND STUDS

AR103.2.4 Stabilization of light straw-clay. Light straw-clay shall be stabilized as follows, or shall be in accordance with an approved design by a registered design professional:

1. Vertical stabilization shall be of structural or nonstructural wood framing in accordance with Figure AR103.2.4(1), AR103.2.4(2) or AR103.2.4(3). Framing members that are both load-bearing and stabilization members shall meet the requirements of Section R602 and this section. Nonstructural stabilization members shall be not more than 32 inches (813 mm) on center.
2. Horizontal stabilization shall be installed at not more than 24 inches (610 mm) on center and in accordance with Figure AR103.2.4(1), AR103.2.4(2) or AR103.2.4(3). Horizontal stabilization shall be of any of the following with the stated minimum dimensions: $^3/_4$-inch (19.1 mm) bamboo, $^1/_2$-inch (12.7 mm) fiberglass rod, 1-inch (25 mm) wood dowel or nominal 1-inch by 2-inch (25 mm by 51 mm) wood.

AR103.3 Materials. The materials used in light straw-clay construction shall be in accordance with Sections AR103.3.1 through AR103.3.3.

AR103.3.1 Straw requirements. Straw shall be stems of wheat, rye, oats, rice or barley, and shall be free of visible decay, insects and green plant material.

AR103.3.2 Clay subsoil requirements. Suitability of clay subsoil shall be determined in accordance with Table AR103.2.3.

AR103.3.3 Light straw-clay mixture. A light straw-clay mixture shall consist of loose straw mixed and coated with clay slip such that there is not more than 5 percent uncoated straw, and shall be in accordance with Table AR103.2.3.

AR103.4 Wall construction. Light straw-clay wall construction shall be in accordance with the requirements of Sections AR103.4.1 through AR103.4.7.

AR103.4.1 Light straw-clay maximum thickness. The maximum thickness of light straw-clay shall be in accordance with Table AR103.2.3.

AR103.4.2 Distance above grade. Light straw-clay and its exterior finish shall be not less than 8 inches (203 mm) above exterior finished grade.

AR103.4.3 Moisture barrier. An approved moisture barrier shall separate the bottom of light straw-clay walls from any masonry or concrete foundation or slab that directly supports the walls. Penetrations and joints in the barrier shall be sealed with an approved sealant.

AR103.4.4 Contact with wood members. Light straw-clay shall be permitted to be in contact with untreated wood members.

AR103.4.5 Contact with nonwood structural members. Nonwood structural members in contact with light straw-clay shall be resistant to corrosion or shall be coated to prevent corrosion with an approved coating.

AR103.4.6 Installation. Light straw-clay shall be installed in accordance with the following:

1. Formwork shall be sufficiently strong to resist bowing where the light straw-clay is compacted into the forms.
2. Light straw-clay shall be uniformly placed into forms and evenly tamped to achieve stable walls free of voids. Light straw-clay shall be placed in lifts of not more than 6 inches (152 mm) and shall be thoroughly tamped before additional material is added.
3. Temporary formwork shall be removed from walls within 24 hours after tamping, and walls shall remain exposed until moisture content is in accordance with Section AR103.5.1. Visible voids shall be filled with light straw-clay or other insulative material prior to plastering.

AR103.4.7 Openings in walls. Openings in walls shall be in accordance with the following:

1. Rough framing for doors and windows shall be fastened to structural members in accordance with the *California Residential Code*. Windows and doors shall be flashed in accordance with the *California Residential Code*.
2. An approved moisture barrier shall be installed at window sills in light straw-clay walls prior to installation of windows.

AR103.5 Wall finishes. The interior and exterior surfaces of light straw-clay walls shall be protected with a finish in accordance with Sections AR103.5.1 through AR103.5.5.

AR103.5.1 Dimensional stability of light straw-clay prior to application of plaster finish. Light straw-clay infill having a density of 30 pounds per cubic foot (480.6 kg/m^3) or greater shall be dry to a moisture content of not more than 20 percent at a depth of 4 inches (102 mm), as measured from each side of the wall. Light straw-clay infill having a density of less than 30 pounds per cubic foot (480.6 kg/m^3) shall be sufficiently dry such that the overall shrinkage of the light straw-clay is dimensionally stable.

AR103.5.2 Plaster finish. Exterior plaster shall be clay plasters or lime plasters. Interior plasters shall be clay plasters, lime plasters or gypsum plasters. Plasters shall be permitted to be applied directly to the surface of the light straw-clay walls without reinforcement, except that the juncture of dissimilar substrates shall be in accordance with Section AR103.5.4. Plasters shall have a thickness of not less than $^1/_2$ inch (12.7 mm) and not more than 1 inch (25 mm) and shall be installed in not less than two coats. Rain-exposed clay plasters shall be finished with a lime-based or silicate-mineral coating.

AR103.5.3 Separation of wood and plaster. Where wood framing occurs in light straw-clay walls, such wood surfaces shall be separated from exterior plaster with No.15 asphalt felt, Grade D paper or other approved material except where the wood is preservative treated or naturally durable.

Exception: Exterior clay plasters shall not be required to be separated from wood.

AR103.5.4 Bridging across dissimilar substrates. Bridging shall be installed across dissimilar substrates prior to the application of plaster. Acceptable bridging materials include: expanded metal lath, woven wire mesh, welded wire mesh, fiberglass mesh, reed matting or burlap. Bridging shall extend not less than 4 inches (102 mm), on both sides of the juncture.

AR103.5.5 Exterior cladding. Exterior cladding shall be spaced not less than $^1/_2$ inch (19.1 mm) from the light straw-clay such that a ventilation space is created to allow for moisture diffusion. Furring strips that create this ventilation space shall be securely fastened to the stabilization members or framing. The cladding shall be fastened to the wood furring strips in accordance with the manufacturer's instructions. Insect screening shall be provided at the top and bottom of the ventilation space.

SECTION AR104
THERMAL PERFORMANCE

AR104.1 Thermal characteristics. Walls with light straw-clay infill of densities of greater than or equal to 20 pounds per cubic foot (480.6 kg/m^3) shall be classified as mass walls in accordance with Section N1102.2.5 (R402.2.5) and shall meet the R-value requirements for mass walls in Table N1102.1.2 (R402.1.2). Walls with light straw-clay infill of densities less than 20 pounds per cubic foot (480.6 kg/m^3) shall meet the R-value requirements for wood frame walls in Table N1102.1.2 (R402.1.2).

AR104.2 Thermal resistance. Light straw-clay shall be deemed to have a thermal resistance as specified in Table AR103.2.3.

CALIFORNIA RESIDENTIAL CODE – MATRIX ADOPTION TABLE
APPENDIX S – STRAWBALE CONSTRUCTION

(Matrix Adoption Tables are nonregulatory, intended only as an aid to the code user. See Chapter 1 for state agency authority and building applications.)

Adopting agency	BSC	BSC-CG	SFM	HCD			DSA			OSHPD						BSCC	DPH	AGR	DWR	CEC	CA	SL	SLC
				1	2	1/AC	AC	SS	SS/CC	1	1R	2	3	4	5								
Adopt entire chapter																							
Adopt entire chapter as amended (amended sections listed below)				X																			
Adopt only those sections that are listed below																							
Chapter / Section																							
AS104.2 Exception				X																			
AS105.6.2				X																			
AS105.6.3				X																			

APPENDIX S

STRAWBALE CONSTRUCTION

The provisions contained in this appendix are not mandatory unless specifically adopted by a state agency or referenced in the adopting ordinance.

User note:

About this appendix: *The use of strawbale construction has steadily increased since the 1980s such that there are now buildings of strawbale construction in every state in the U.S. and in more than 50 countries around the globe. Estimates are that there are over 1,000 buildings of strawbale construction in California alone, including both residential and commercial buildings. Appendix S provides prescriptive requirements for the construction of exterior and interior walls, both structural and nonstructural, in buildings that are under the scope of this code.*

SECTION AS101
GENERAL

AS101.1 Scope. This appendix provides prescriptive and performance-based requirements for the use of baled straw as a building material. Other methods of strawbale construction shall be subject to approval in accordance with Section R104.11 of this code. Buildings using strawbale walls shall comply with this code except as otherwise stated in this appendix.

AS101.2 Strawbale wall systems. Strawbale wall systems include those shown in Figure AS101.2 and approved variations.

SECTION AS102
DEFINITIONS

AS102.1 Definitions. The following words and terms shall, for the purposes of this appendix, have the meanings shown herein. Refer to Chapter 2 of the *California Residential Code* for general definitions.

BALE. Equivalent to straw bale.

CLAY. Inorganic soil with particle sizes less than 0.00008 inch (0.002 mm) having the characteristics of high to very high dry strength and medium to high plasticity.

CLAY SLIP. A suspension of clay subsoil in water.

CLAY SUBSOIL. Subsoil sourced directly from the earth or refined, containing clay and free of organic matter.

FINISH. Completed compilation of materials on the interior or exterior faces of stacked bales.

FLAKE. An intact section of compressed straw removed from an untied bale.

LAID FLAT. The orientation of a bale with its largest faces horizontal, its longest dimension parallel with the wall plane, its ties concealed in the unfinished wall and its straw lengths oriented predominantly across the thickness of the wall. See Figure AS102.1.

LOAD-BEARING WALL. A strawbale wall that supports more than 100 pounds per linear foot (1459 N/m) of vertical load in addition its own weight.

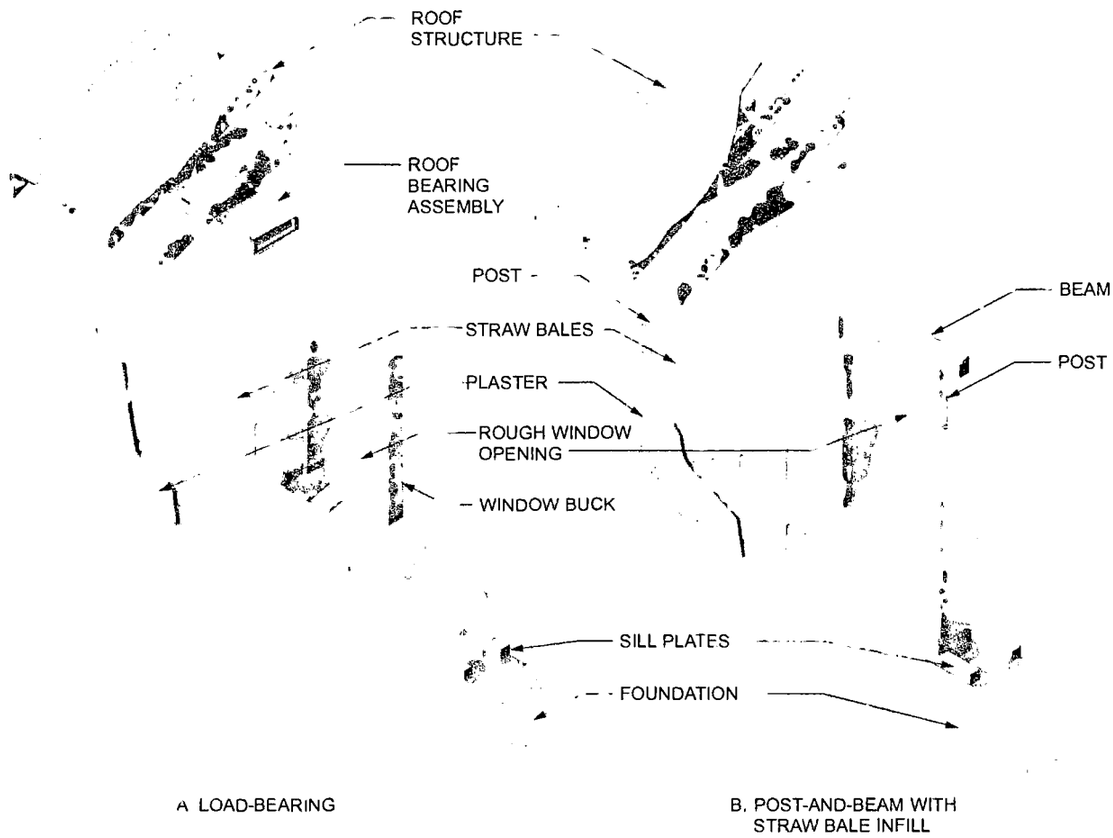

NOTE: SEE FIGURES AS105.1(1) THROUGH AS105.1(4) FOR DETAILED VIEWS AND SECTION REFERENCES. OTHER STRAWBALE WALL SYSTEMS OR VARIATIONS ARE PERMITTED AS *APPROVED*.

FIGURE AS102.1
TYPICAL STRAWBALE WALL SYSTEMS

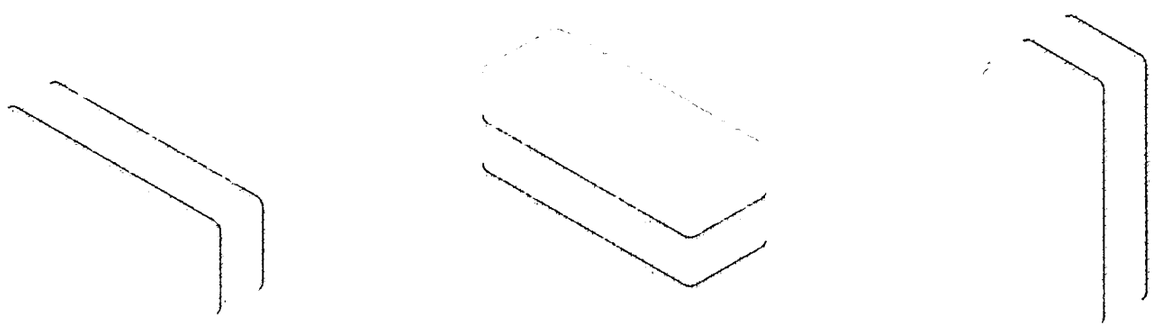

LAID FLAT | ON-EDGE | ON-END (FOR USE IN NONSTRUCTURAL STRAWBALE WALLS ONLY.)

NOTE. ILLUSTRATIONS ALSO SHOW THE PREDOMINANT DIRECTION OF THE LENGTHS OF STRAW IN A TYPICAL STRAW BALE. HOWEVER, SOME RANDOMNESS OF DIRECTION IS NORMAL.

For SI: 1 inch - 25.4 mm.

FIGURE AS102.1
BALE ORIENTAITIONS

MESH. An openwork fabric of linked strands of metal, plastic, or natural or synthetic fiber.

NONSTRUCTURAL WALL. Walls other than load-bearing walls or shear walls.

ON-EDGE. The orientation of a bale with its largest faces vertical, its longest dimension parallel with the wall plane, its ties on the face of the wall and its straw lengths oriented predominantly vertically. See Figure AS102.1.

ON-END. The orientation of a bale with its longest dimension vertical. For use in nonstructural strawbale walls only. See Figure AS102.1.

PIN. A vertical metal rod, wood dowel or bamboo, driven into the center of stacked bales, or placed on opposite surfaces of stacked bales and through-tied.

PLASTER. Gypsum plaster, cement plaster, clay plaster, soil-cement plaster, lime plaster or cement-lime plaster as described in Section AS104.

PRECOMPRESSION. Vertical compression of stacked bales before the application of finish.

REINFORCED PLASTER. A plaster containing mesh reinforcement.

RUNNING BOND. The placement of straw bales such that the head joints in successive courses are offset not less than one-quarter the bale length.

SHEAR WALL. A strawbale wall designed and constructed to resist lateral seismic and wind forces parallel to the plane of the wall in accordance with Section AS106.13.

SKIN. The compilation of plaster and reinforcing, if any, applied to the surface of stacked bales.

STRUCTURAL WALL. A wall that meets the definition for a load-bearing wall or shear wall.

STACK BOND. The placement of straw bales such that head joints in successive courses are vertically aligned.

STRAW. The dry stems of cereal grains after the seed heads have been removed.

STRAW BALE. A rectangular compressed block of straw, bound by ties.

STRAWBALE. The adjective form of straw bale.

STRAW-CLAY. Loose straw mixed and coated with clay slip.

TIE. A synthetic fiber, natural fiber or metal wire used to confine a straw bale.

TRUTH WINDOW. An area of a strawbale wall left without its finish, to allow view of the straw otherwise concealed by its finish.

SECTION AS103
BALES

AS103.1 Shape. Bales shall be rectangular in shape.

AS103.2 Size. Bales shall have a height and thickness of not less than 12 inches (305 mm), except as otherwise permitted or required in this appendix. Bales used within a continuous wall shall be of consistent height and thickness to ensure even distribution of loads within the wall system. See Figure AS103.2 for approximate dimensions of common straw bales.

AS103.3 Ties. Bales shall be confined by synthetic fiber, natural fiber or metal ties sufficient to maintain required bale density. Ties shall be not less than 3 inches (76 mm) and not more than 6 inches (152 mm) from the two faces without ties and shall be spaced not more than 12 inches (305 mm) apart. Bales with broken ties shall be retied with sufficient tension to maintain required bale density.

AS103.4 Moisture content. The moisture content of bales at the time of application of the first coat of plaster or the installation of another finish shall not exceed 20 percent of the weight of the bale. The moisture content of bales shall be determined with a moisture meter designed for use with baled straw or hay, equipped with a probe of sufficient length to reach the center of the bale. Not less than 5 percent and not fewer than 10 bales shall be randomly selected and tested.

AS103.5 Density. Bales shall have a dry density of not less than 6.5 pounds per cubic foot (104 kg/cubic meter). The dry density shall be calculated by subtracting the weight of the moisture in pounds (kg) from the actual bale weight and dividing by the volume of the bale in cubic feet (cubic

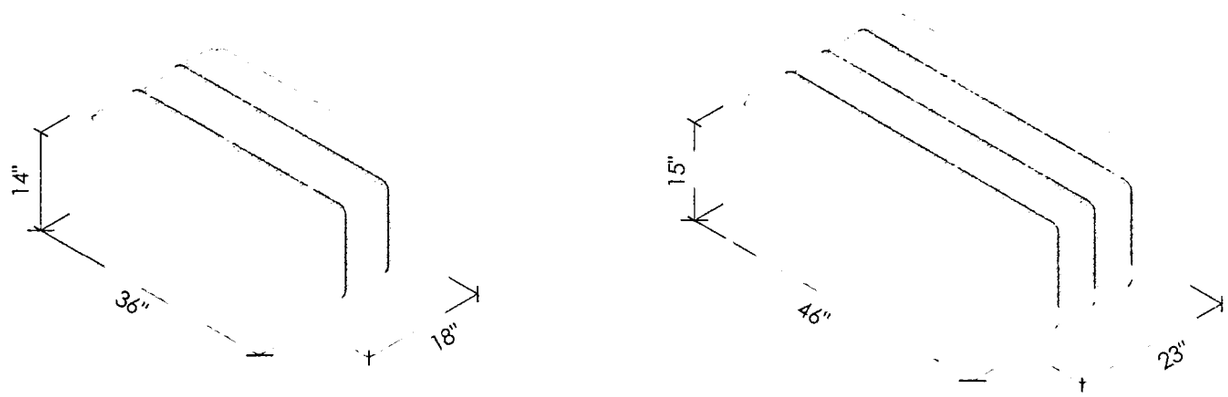

TWO-STRING BALE

THREE-STRING BALE

FIGURE AS103.2
APPROXIMATE DIMENSIONS OF COMMON STRAW BALES

meters). Not less than 2 percent and not fewer than five bales shall be randomly selected and tested on site.

AS103.6 Partial bales. Partial bales made after original fabrication shall be retied with ties complying with Section AS103.3.

AS103.7 Types of straw. Bales shall be composed of straw from wheat, rice, rye, barley or oat.

AS103.8 Other baled material. The dry stems of other cereal grains shall be acceptable where approved by the building official.

SECTION AS104
FINISHES

AS104.1 General. Finishes applied to strawbale walls shall be any type permitted by this code, and shall comply with this section and with Chapters 3 and 7 unless stated otherwise in this section.

AS104.2 Purpose, and where required. Strawbale walls shall be finished so as to provide mechanical protection, fire resistance and protection from weather and to restrict the passage of air through the bales, in accordance with this appendix and this code. Vertical strawbale wall surfaces shall receive a coat of plaster not less than $^3/_8$ inch (10 mm) thick, or greater where required elsewhere in this appendix, or shall fit tightly against a solid wall panel or dense-packed cellulose insulation with a density of not less than 3.5 pounds per cubic foot (56 kg/m^3) blown into an adjacent framed wall. The tops of strawbale walls shall receive a coat of plaster not less than $^3/_8$ inch (10 mm) thick where straw would otherwise be exposed.

Exception: Truth windows shall be permitted where a fire-resistance rating is not required. Weather-exposed truth windows shall be fitted with a weather-tight cover. Interior truth windows in Climate Zones *14 and 16* shall be fitted with an air-tight cover.

AS104.3 Vapor retarders. Class I and II vapor retarders shall not be used on a strawbale wall, nor shall any other material be used that has a vapor permeance rating of less than 3 perms, except as permitted or required elsewhere in this appendix.

AS104.4 Plaster. *P*laster applied to bales shall be any type described in this section, and as required or limited in this appendix. Plaster thickness shall not exceed 2 inches (51 mm).

AS104.4.1 Plaster and membranes. Plaster shall be applied directly to strawbale walls to facilitate transpiration of moisture from the bales, and to secure a mechanical bond between the skin and the bales, except where a membrane is allowed or required elsewhere in this appendix.

AS104.4.2 Lath and mesh for plaster. The surface of the straw bales functions as lath, and other lath or mesh shall not be required, except as required for out-of-plane resistance by Table AS105.4 or for structural walls by Tables AS106.12 and AS106.13(1).

AS104.4.3 Clay plaster. Clay plaster shall comply with Sections AS104.4.3.1 through AS104.4.3.6.

AS104.4.3.1 General. Clay plaster shall be any plaster having a clay or clay subsoil binder. Such plaster shall contain sufficient clay to fully bind the plaster, sand or other inert granular material, and shall be permitted to contain reinforcing fibers. Acceptable reinforcing fibers include chopped straw, sisal and animal hair.

AS104.4.3.2 Clay subsoil requirements. The suitability of clay subsoil shall be determined in accordance with the Figure 2 Ribbon Test or the Figure 3 Ball Test in the appendix of ASTM E2392/E2392M.

AS104.4.3.3 Thickness and coats. Clay plaster shall be not less than 1 inch (25 mm) thick, except where required to be thicker for structural walls as described elsewhere in this appendix, and shall be applied in not less than two coats.

AS104.4.3.4 Rain-exposed. Clay plaster, where exposed to rain, shall be finished with lime wash, lime plaster, linseed oil or other approved erosion-resistant finish.

AS104.4.3.5 Prohibited finish coat. Plaster containing Portland cement shall not be permitted as a finish coat over clay plasters.

AS104.4.3.6 Plaster additives. Additives shall be permitted to increase plaster workability, durability, strength or water resistance.

AS104.4.4 Soil-cement plaster. Soil-cement plaster shall comply with Sections AS104.4.4.1 through AS104.4.4.3.

AS104.4.4.1 General. Soil-cement plaster shall be composed of clay subsoil, sand and not less than 10 percent and not more than 20 percent Portland cement by volume, and shall be permitted to contain reinforcing fibers.

AS104.4.4.2 Lath and mesh. Soil-cement plaster shall use any corrosion-resistant lath or mesh permitted by this code, or as required in Section AS106 where used on structural walls.

AS104.4.4.3 Thickness. Soil-cement plaster shall be not less than 1 inch (25 mm) thick.

AS104.4.5 Gypsum plaster. Gypsum plaster shall comply with Section R702.2.1. Gypsum plaster shall be limited to use on interior surfaces of nonstructural walls, and as an interior finish coat over a structural plaster that complies with this appendix.

AS104.4.6 Lime plaster. Lime plaster shall comply with Sections AS104.4.6.1 through AS104.4.6.3.

AS104.4.6.1 General. Lime plaster is any plaster with a binder that is composed of calcium hydroxide (CaOH) including Type N or S hydrated lime, hydraulic lime, natural hydraulic lime or quicklime. Hydrated lime shall comply with ASTM C206. Hydraulic lime shall comply with ASTM C1707. Natural hydraulic lime shall comply with ASTM C141 and EN 459. Quicklime shall comply with ASTM C5.

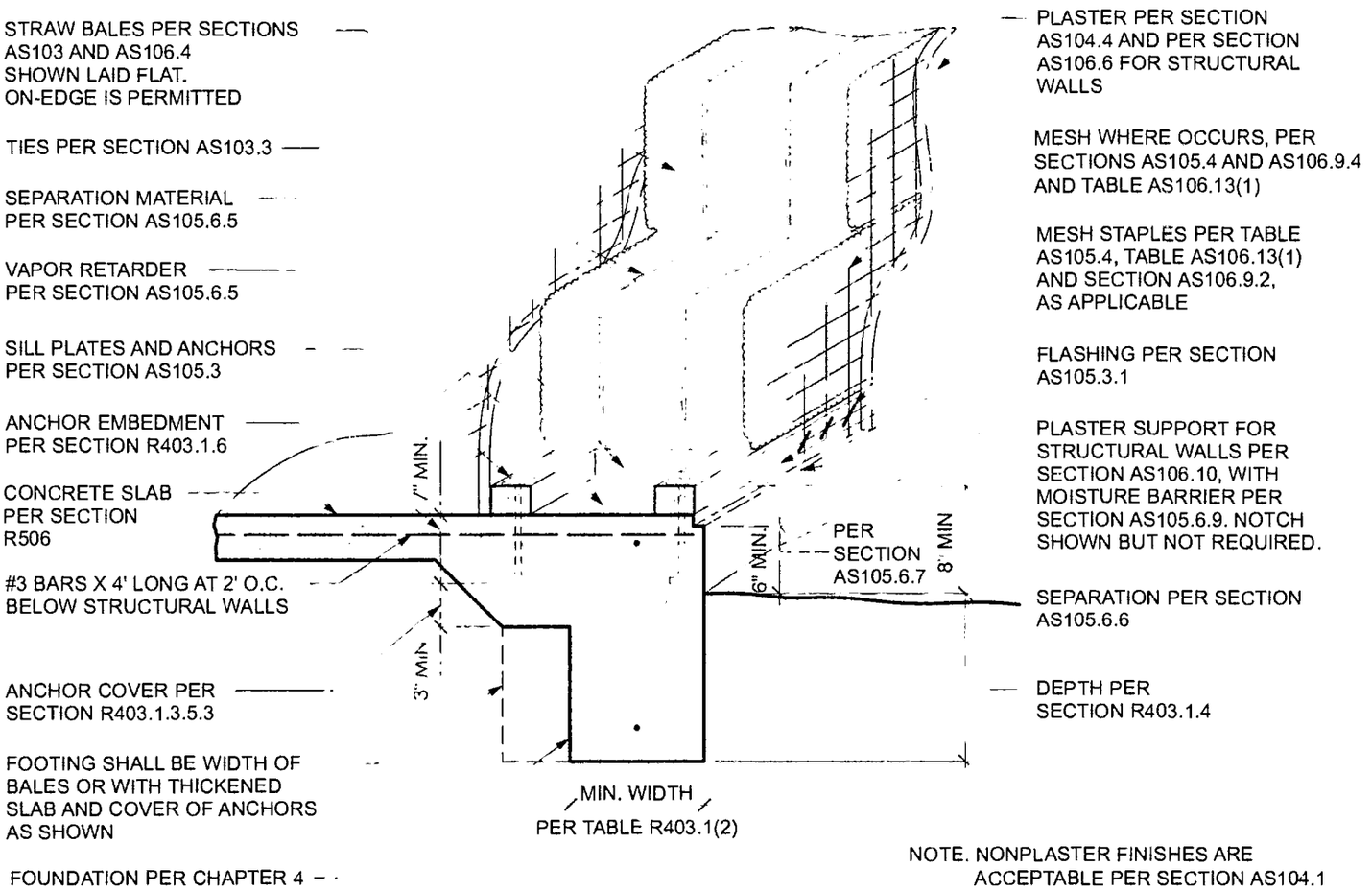

For SI: 1 inch = 25.4 mm.

FIGURE AS105.1(1)
TYPICAL BASE OF PLASTERED STRAWBALE WALL ON CONCRETE SLAB AND FOOTING

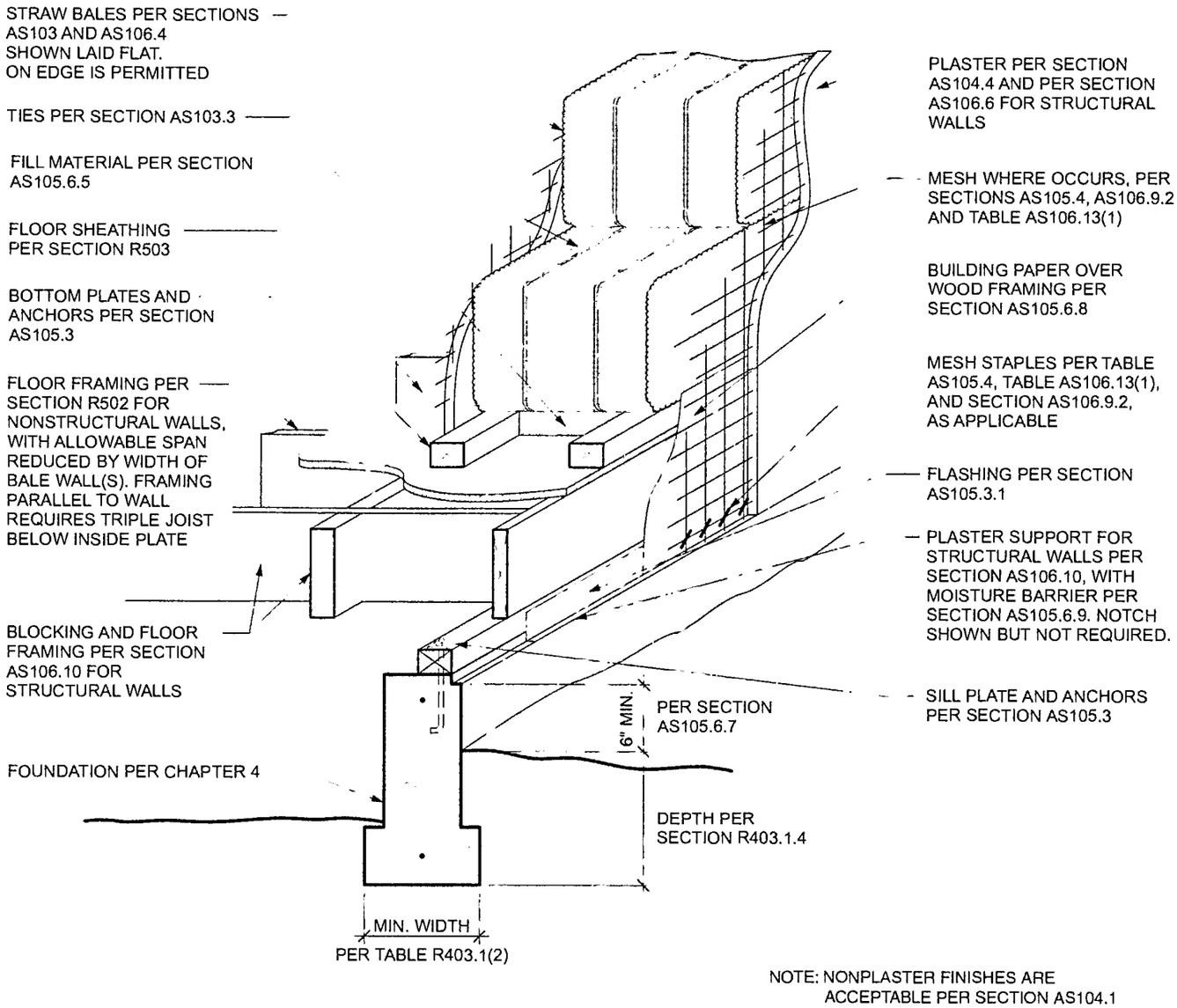

For SI: 1 inch = 25.4 mm.

FIGURE AS105.1(2)
TYPICAL BASE OF PLASTERED STRAWBALE WALL OVER RAISED FLOOR

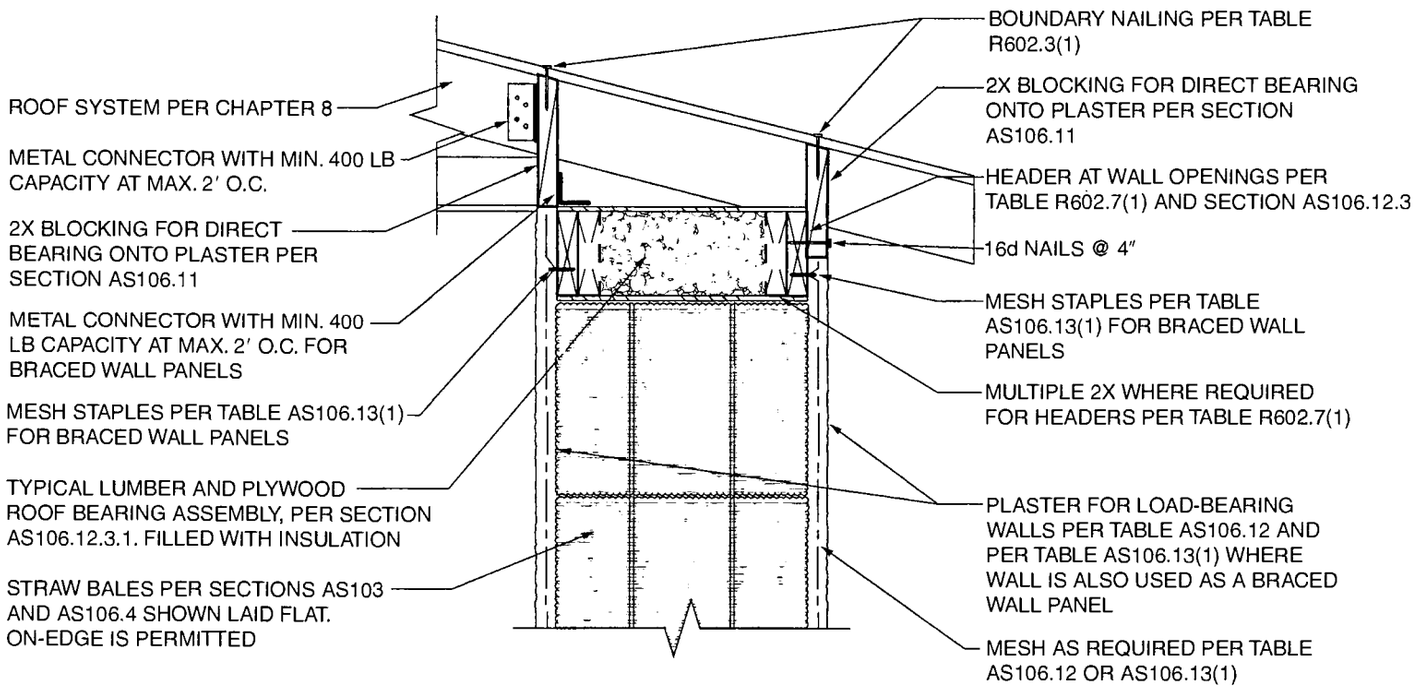

For SI: 1 inch = 25.4 mm, 1 pound = 2.2 kg.

FIGURE AS105.1(3)
TYPICAL TOP OF LOAD-BEARING STRAWBALE WALL

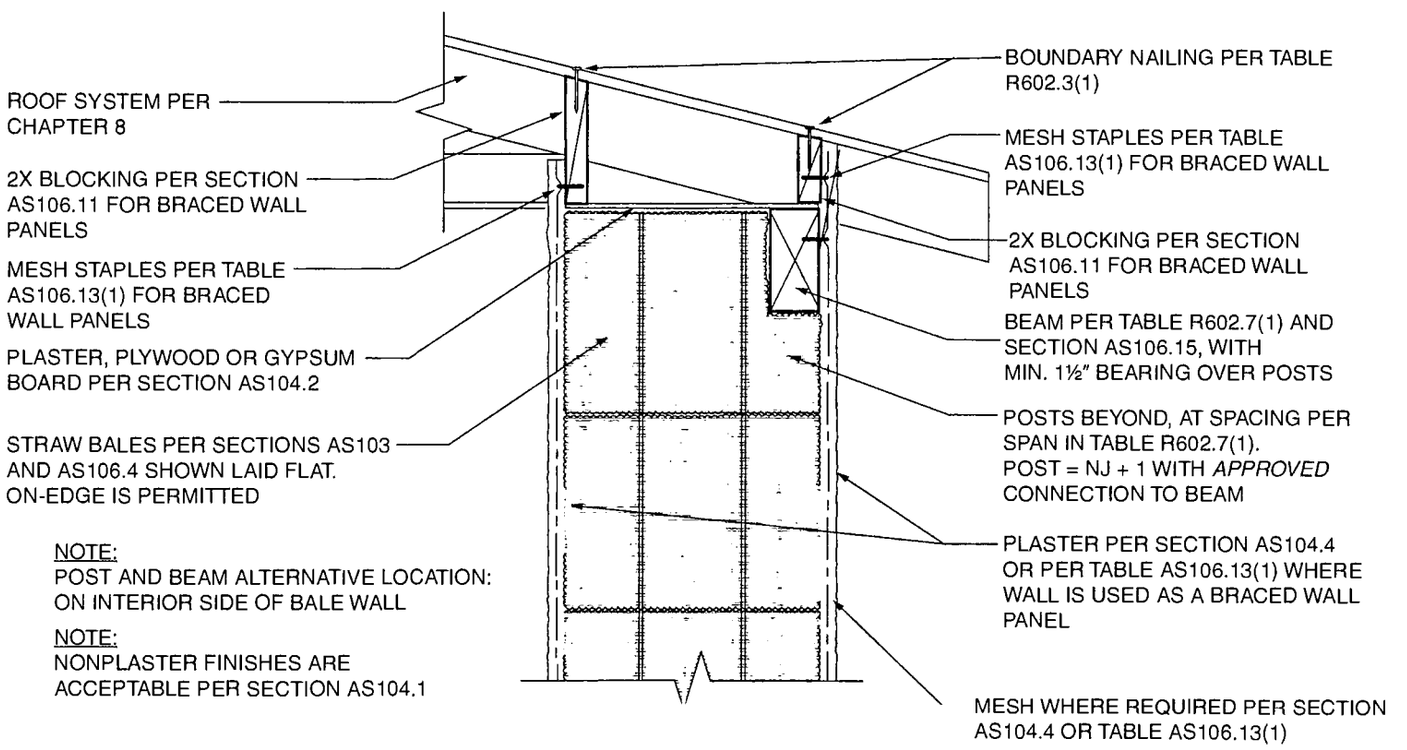

For SI: 1 inch = 25.4 mm.

FIGURE AS105.1(4)
TYPICAL TOP OF POST-AND-BEAM WALL WITH PLASTERED STRAWBALE INFILL

AS104.4.6.2 Thickness and coats. Lime plaster shall be not less than $^7/_8$ inch (22 mm) thick, and shall be applied in not less than three coats.

AS104.4.6.3 On structural walls. Lime plaster on strawbale structural walls in accordance with Table AS106.12 or Table AS106.13(1) shall use a binder of hydraulic or natural hydraulic lime.

AS104.4.7 Cement-lime plaster. Cement-lime plaster shall be plaster mixes CL, F or FL, as described in ASTM C926.

AS104.4.8 Cement plaster. Cement plaster shall conform to ASTM/C926 and shall comply with Sections R703.7.4 and R703.7.5, except that the amount of lime in plaster coats shall be not less than 1 part lime to 6 parts cement to allow a minimum acceptable vapor permeability. The combined thickness of plaster coats shall be not more than $1^1/_2$ inches (38 mm) thick.

SECTION AS105
STRAWBALE WALLS—GENERAL

AS105.1 General. Strawbale walls shall be designed and constructed in accordance with this section and with Figures AS105.1(1) through AS105.1(4) or an approved alternative design. Strawbale structural walls shall be in accordance with the additional requirements of Section AS106.

AS105.2 Building limitations and requirements for use of strawbale nonstructural walls. Buildings using strawbale nonstructural walls shall be subject to the following limitations and requirements:

1. Number of stories: not more than one, except that two stories shall be allowed with an approved engineered design.

TABLE AS105.4
OUT-OF-PLANE RESISTANCE METHODS AND UNRESTRAINED WALL DIMENSION LIMITS

METHOD OF OUT-OF-PLANE LOAD RESISTANCE[a]	FOR ULTIMATE DESIGN WIND SPEEDS (mph)	FOR SEISMIC DESIGN CATEGORIES	UNRESTRAINED WALL DIMENSIONS, H[b]		MESH STAPLE SPACING AT BOUNDARY RESTRAINTS
			Absolute limit in feet	Limit based on bale thickness T[c] in feet (mm)	
Nonplaster finish or unreinforced plaster	≤ 130	A, B, C, D_0	$H \le 8$	$H \le 5T$	None required
Pins per Section AS105.4.2	≤ 130	A, B, C, D_0	$H \le 12$	$H \le 8T$	None required
Pins per Section AS105.4.2	≤ 140	A, B, C, D_0, D_1, D_2	$H \le 10$	$H \le 7T$	None required
Reinforced[d] clay plaster	≤ 140	A, B, C, D_0, D_1, D_2	$H \le 10$	$H \le 8T^{0.5}$ ($H \le 140T^{0.5}$)	≤ 6 inches
Reinforced[d] clay plaster	≤ 140	A, B, C, D_0, D_1, D_2	$10 < H \le 12$	$H \le 8T^{0.5}$ ($H \le 140T^{0.5}$)	≤ 4 inches[e]
Reinforced[d] cement, cement-lime, lime or soil-cement plaster	≤ 140	A, B, C, D_0, D_1, D_2	$H \le 10$	$H \le 9T^{0.5}$ ($H \le 157T^{0.5}$)	≤ 6 inches
Reinforced[d] cement, cement-lime, lime or soil-cement plaster	≤ 155	A, B, C, D_0, D_1, D_2	$H \le 12$	$H \le 9T^{0.5}$ ($H \le 157T^{0.5}$)	≤ 4 inches[e]
2x6 load-bearing studs[f] at max. 6′ o.c.	≤ 140	A, B, C, D_0, D_1, D_2	$H^g \le 9$	N/A	None required
2x6 load-bearing studs[f] at max. 4′ o.c.	≤ 140	A, B, C, D_0, D_1, D_2	$H^g \le 10$	N/A	None required
2x6 load-bearing studs[f] at max. 2′ o.c.	≤ 140	A, B, C, D_0, D_1, D_2	$H^g \le 12$	N/A	None required
2x4 load-bearing studs[f] at max. 2′ o.c.	≤ 140	A, B, C, D_0, D_1, D_2	$H^g \le 10$	N/A	None required
2x6 nonload-bearing studs[f] at max. 6′ o.c.	≤ 140	A, B, C, D_0, D_1, D_2	$H^g \le 12$	N/A	None required

For SI: 1 inch = 25.4 mm, 1 foot = 304.8 mm, 1 mile per hour = 0.447 m/s.

N/A = Not Applicable

a. Finishes applied to both sides of stacked bales. Where different finishes are used on opposite sides of a wall, the more restrictive requirements shall apply.

b. H = Stacked bale height in feet (mm) between sill plate and top plate or other approved horizontal restraint, or the horizontal distance in feet (mm) between approved vertical restraints. For load-bearing walls, H refers to vertical height only.

c. T = Bale thickness in feet (mm).

d. Plaster reinforcement shall be any mesh allowed in Table AS106.16 for the matching plaster type, and with staple spacing in accordance with this table. Mesh shall be installed in accordance with Section AS106.9.

e. Sill plate attachment shall be with $^5/_8$-inch anchor bolts or approved equivalent at not more than 48 inches on center where staple spacing is required to be ≤ 4 inches.

f. Bales shall be attached to the studs by an approved method. Horizontal framing and attachment at top and bottom of studs shall be in accordance with Section R602 or an approved alternative. Table R602.7(1) shall be used to determine the top framing member where load-bearing stud spacing exceeds 24 inches o.c.

g. H is vertical height only.

2. Building height: not more than 25 feet (7620 mm), except that greater heights shall be allowed with an approved engineered design.
3. Wall height: in accordance with Table AS105.4.
4. Braced wall panel lengths: in accordance with Section R602.10.3, with the additional requirements that Table R602.10.3(3) shall apply to all buildings in Seismic Design Category C, and the minimum total length of braced wall panels in Table R602.10.3(3) shall be increased by 60 percent for buildings in Seismic Design Categories C, D_0, D_1 and D_2.

AS105.3 Sill plates. Sill plates shall be installed in accordance with Figure AS105.1(1) or AS105.1(2). Sill plates shall support and be flush with each face of the straw bales above and shall be of naturally durable or preservative-treated wood where required by this code. Sill plates shall be not less than nominal 2 inches by 4 inches (51 mm by 102 mm) with anchoring complying with Section R403.1.6 and the additional requirements of Tables AS105.4 and AS106.6(1), where applicable.

AS105.3.1 Exterior sill plate flashing. Exterior sill plates shall receive flashing across the plate to slab or foundation joints.

AS105.4 Out-of-plane resistance methods and unrestrained wall dimension limits. Strawbale walls shall employ a method of out-of-plane load resistance in accordance with Table AS105.4, and comply with its associated limits and requirements.

AS105.4.1 Determination of out-of-plane loading. Out-of-plane loading for the use of Table AS105.4 shall be in terms of the ultimate design wind speed and seismic design category as determined in accordance with Sections R301.2.1 and R301.2.2.

AS105.4.2 Pins. Pins used for out-of-plane resistance shall comply with the following or shall be in accordance with an approved engineered design. Pins shall be external, internal or a combination of the two.

1. Pins shall be $^1/_2$-inch-diameter (12.7 mm) steel, $^3/_4$-inch-diameter (19.1 mm) wood or $^1/_2$-inch-diameter (12.7 mm) bamboo.
2. External pins shall be installed vertically on both sides of the wall at a spacing of not more than 24 inches (610 mm) on center. External pins shall have full lateral bearing on the sill plate and the top plate or roof-bearing element, and shall be tightly tied through the wall to an opposing pin with ties spaced not more than 32 inches (813 mm) apart and not more than 8 inches (203 mm) from each end of the pins.
3. Internal pins shall be installed vertically within the center third of the bales, at spacing of not more than 24 inches (610 mm) and shall extend from top course to bottom course. The bottom course shall be connected to its support and the top course shall be connected to the roof- or floor-bearing member above with pins or other approved means. Internal pins shall be continuous or shall overlap through not less than one bale course.

AS105.5 Connection of light-framed walls to strawbale walls. Light-framed walls perpendicular to, or at an angle to a strawbale wall assembly, shall be fastened to the bottom and top wood members of the strawbale wall in accordance with requirements for wood or cold-formed steel light-framed walls in this code, or the abutting stud shall be connected to alternating strawbale courses with a $^1/_2$-inch diameter (12.7 mm) steel, $^3/_4$-inch-diameter (19.1 mm) wood or $^5/_8$-inch-diameter (15.9 mm) bamboo dowel, with not less than 8-inch (203 mm) penetration.

AS105.6 Moisture control. Strawbale walls shall be protected from moisture intrusion and damage in accordance with Sections AS105.6.1 through AS105.6.9.

AS105.6.1 Water-resistant barriers and vapor permeance ratings. Plastered bale walls shall be constructed without any membrane barrier between straw and plaster to facilitate transpiration of moisture from the bales, and to secure a structural bond between straw and plaster, except as permitted or required elsewhere in this appendix. Where a water-resistant barrier is placed behind an exterior finish, it shall have a vapor permeance rating of not less than 5 perms, except as permitted or required elsewhere in this appendix.

AS105.6.2 Vapor retarders. Wall finishes shall have an equivalent vapor permeance rating of a Class III vapor retarder on the interior side of exterior strawbale walls in Climate Zones *14 and 16, as referenced in the California Energy Code.* Bales in walls enclosing showers or steam rooms shall be protected on the interior side by a Class I or Class II vapor retarder.

AS105.6.3 Penetrations in exterior strawbale walls. Penetrations in exterior strawbale walls shall be sealed with an approved sealant or gasket on the exterior side of the wall in all climate zones, and on the interior side of the wall in Climate Zones *14 and 16, as referenced in the California Energy Code.*

AS105.6.4 Horizontal surfaces. Bale walls and other bale elements shall be provided with a water-resistant barrier at weather-exposed horizontal surfaces. The water-resistant barrier shall be of a material and installation that will prevent water from entering the wall system. Horizontal surfaces shall include exterior window sills, sills at exterior niches and buttresses. Horizontal surfaces shall be sloped not less than 1 unit vertical in 12 units horizontal (8-percent slope) and shall drain away from bale walls and elements. Where the water-resistant barrier is below the finish material, it shall be sloped not less than 1 unit vertical in 12 units horizontal (8-percent slope) and shall drain to the outside surface of the bale wall's vertical finish.

AS105.6.5 Separation of bales and concrete. A sheet or liquid-applied Class II vapor retarder shall be installed between bales and supporting concrete or masonry. The bales shall be separated from the vapor retarder by not less than $^3/_4$ inch (19.1 mm), and that space shall be filled with an insulating material such as wood or rigid insulation, or a material that allows vapor dispersion such as gravel, or other approved insulating or vapor dispersion material. Sill plates shall be installed at this interface in accordance

with Section AS105.3. Where bales abut a concrete or masonry wall that retains earth, a Class II vapor retarder shall be provided between such wall and the bales.

AS105.6.6 Separation of bales and earth. Bales shall be separated from earth by not less than 8 inches (203 mm).

AS105.6.7 Separation of exterior plaster and earth. Exterior plaster applied to straw bales shall be located not less than 6 inches (102 mm) above earth or 3 inches (51 mm) above paved areas.

AS105.6.8 Separation of wood and plaster. Where wood framing or wood sheathing occurs at the exterior face of strawbale walls, such wood surfaces shall be separated from exterior plaster with two layers of Grade D paper, No. 15 asphalt felt or other approved material in accordance with Section R703.7.3.

Exceptions:

1. Where the wood is preservative treated or naturally durable and is not greater than $1^1/_2$ inches (38 mm) in width.
2. Clay plaster shall not be required to be separated from untreated wood that is not greater than $1^1/_2$ inches (38 mm) in width.

AS105.6.9 Separation of exterior plaster and foundation. Exterior plaster shall be separated from the building foundation with a moisture barrier.

AS105.7 Inspections. The building official shall inspect the following aspects of strawbale construction in accordance with Section R109.1:

1. Sill plate anchors, as part of and in accordance with Section R109.1.1.
2. Mesh placement and attachment, where mesh is required by this appendix.
3. Pins, where required by and in accordance with Section AS105.4.

AS105.8 Voids and stuffing. Voids between bales and between bales and framing members shall not exceed 4 inches (102 mm) in width, and such voids shall be tightly stuffed with flakes, loose straw or straw-clay before application of finish.

SECTION AS106
STRAWBALE WALLS—STRUCTURAL

AS106.1 General. Plastered strawbale walls shall be permitted to be used as structural walls in accordance with the prescriptive provisions of this section.

AS106.2 Building limitations and requirements for use of strawbale structural walls. Buildings using strawbale structural walls shall be subject to the following limitations and requirements:

1. Number of stories: Not more than one.
2. Building height: Not more than 25 feet (7620 mm).
3. Wall height: In accordance with Table AS105.4, AS106.13(2) or AS106.13(3) as applicable, whichever is most restrictive.
4. Braced wall panel lengths: The greater of the values determined in accordance with Tables AS106.13(2) and AS106.13(3) for buildings using strawbale braced wall panels, or in accordance with Item 4 of Section AS105.2 for buildings with load-bearing strawbale walls that do not use strawbale braced wall panels.

AS106.3 Loads and other limitations. Live and dead loads and other limitations shall be in accordance with Section R301. Strawbale wall dead loads shall not exceed 60 psf (2872 N/m^2) per face area of wall.

AS106.4 Foundations. Foundations for plastered strawbale walls shall be in accordance with Chapter 4, Figure AS105.1(1) or Figure AS105.1(2).

AS106.5 Configuration of bales. Bales in strawbale structural walls shall be laid flat or on-edge and in a running bond or stack bond, except that bales in structural walls with unreinforced plasters shall be laid in a running bond only.

AS106.6 Plaster on structural walls. Plaster on load-bearing walls shall be in accordance with Table AS106.12. Plaster on shear walls shall be in accordance with Table AS106.13(1).

AS106.6.1 Compressive strength. For plaster on strawbale structural walls, the building official is authorized to require a 2-inch (51 mm) cube test conforming to ASTM C109 to demonstrate a minimum compressive strength in accordance with Table AS106.6.1.

TABLE AS106.6.1
MINIMUM COMPRESSIVE STRENGTH FOR PLASTERS ON STRUCTURAL WALLS

PLASTER TYPE	MINIMUM COMPRESSIVE STRENGTH (psi)
Clay	100
Soil-cement	1000
Lime	600
Cement-lime	1000
Cement	1400

For SI: 1 pound per square inch = 6894.76 N/m^2.

AS106.7 Straightness of plaster. Plaster on strawbale structural walls shall be straight, as a function of the bale wall surfaces they are applied to, in accordance with all of the following:

1. As measured across the face of a bale, straw bulges shall not protrude more than $^3/_4$ inch (19.1 mm) across 2 feet (610 mm) of its height or length.
2. As measured across the face of a bale wall, straw bulges shall not protrude from the vertical plane of a bale wall more than 2 inches (51 mm) over 8 feet (2438 mm).
3. The vertical faces of adjacent bales shall not be offset more than $^3/_8$ inch (9.5 mm).

AS106.8 Plaster and membranes. Strawbale structural walls shall not have a membrane between straw and plaster,

or shall have attachment through the bale wall from one plaster skin to the other in accordance with an approved engineered design.

AS106.9 Mesh. Mesh in plasters on strawbale structural walls, and where required by Table AS105.4, shall be installed in accordance with Sections AS106.9.1 through AS106.9.4.

AS106.9.1 Mesh laps. Mesh required by Table AS105.4 or AS106.12 shall be installed with not less than 4-inch (102 mm) laps. Mesh required by Table AS106.13(1) or in walls designed to resist wind uplift of more than 100 plf (1459 N/m), shall run continuous vertically from sill plate to the top plate or roof-bearing element, or shall lap not less than 8 inches (203 mm). Horizontal laps in such mesh shall be not less than 4 inches (102 mm).

AS106.9.2 Mesh attachment. Mesh shall be attached with staples to top plates or roof-bearing elements and to sill plates in accordance with all of the following:

1. **Staples.** Staples shall be pneumatically driven, stainless steel or electro-galvanized, 16 gage with $1^1/_2$-inch (38 mm) legs, $^7/_{16}$-inch (11.1 mm) crown; or manually driven, galvanized, 15 gage with 1-inch (25 mm) legs. Other staples shall be as designed by a registered design professional. Staples into preservative-treated wood shall be stainless steel.
2. **Staple orientation.** Staples shall be firmly driven diagonally across mesh intersections at the required spacing.
3. **Staple spacing.** Staples shall be spaced not more than 4 inches (102 mm) on center, except where a lesser spacing is required by Table AS106.13(1) or Section AS106.14, as applicable.

AS106.9.3 Steel mesh. Steel mesh shall be galvanized, and shall be separated from preservative-treated wood by Grade D paper, No. 15 roofing felt or other approved barrier.

AS106.9.4 Mesh in plaster. Required mesh shall be embedded in the plaster except where staples fasten the mesh to horizontal boundary elements.

AS106.10 Support of plaster skins. Plaster skins on strawbale structural walls shall be continuously supported along their bottom edge. Acceptable supports include: a concrete or masonry stem wall, a concrete slab-on-grade, a wood-framed floor in accordance with Figure AS105.1(2) and an approved engineered design or a steel angle anchored with an approved engineered design. A weep screed as described in Section R702.7.2.1 is not an acceptable support.

AS106.11 Transfer of loads to and from plaster skins. Where plastered strawbale walls are used to support superimposed vertical loads, such loads shall be transferred to the plaster skins by continuous direct bearing in accordance with Figure AS105.1(3) or by an approved engineered design. Where plastered strawbale walls are used to resist in-plane lateral loads, such loads shall be transferred to the reinforcing mesh from the structural member or assembly above in accordance with Figure AS105.1(3) or AS105.1(4) and to the sill plate in accordance with Figure AS105.1(1) or AS105.1(2) and with Table AS106.13(1).

AS106.12 Load-bearing walls. Bearing capacities for plastered strawbale walls used as load-bearing walls in one-story buildings to support vertical loads imposed in accordance with Section R301 shall be in accordance with Table AS106.12.

AS106.12.1 Precompression of load-bearing strawbale walls. Prior to application of plaster, walls designed to be load-bearing shall be precompressed by a uniform load of not less than 100 plf (1459 N/m).

AS106.12.2 Concentrated loads. Concentrated loads shall be distributed by structural elements capable of distributing the loads to the bearing wall within the allowable bearing capacity listed in Table AS106.12 for the plaster type used.

AS106.12.3 Roof-bearing assembly. Roof-bearing assemblies shall be of nominal 2-inch by 6-inch (51 mm by 152 mm) lumber with $^{15}/_{32}$-inch (12 mm) plywood or OSB panels fastened with 8d nails at 6 inches (152 mm) on center in accordance with Figure AS105.1(3) and Items 1 through 6, or be of an approved engineered design.

1. Assembly shall be a box assembly on the top course of bales, with the panels horizontal.

TABLE AS106.12
ALLOWABLE SUPERIMPOSED VERTICAL LOADS (LBS/FOOT) FOR PLASTERED LOAD-BEARING STRAWBALE WALLS

WALL DESIGNATION	PLASTER[a] (both sides) Minimum thickness in inches each side	MESH[b]	STAPLES[c]	ALLOWABLE BEARING CAPACITY[d] (plf)
A	Clay $1^1/_2$	None required	None required	400
B	Soil-cement 1	Required	Required	800
C	Lime $^7/_8$	Required	Required	500
D	Cement-lime $^7/_8$	Required	Required	800
E	Cement $^7/_8$	Required	Required	800

For SI: 1 inch = 25.4mm, 1 pound per foot = 14.5939 N/m.

a. Plasters shall conform to Sections AS104.4.3 through AS104.4.8, AS106.7 and AS106.10.

b. Any metal mesh allowed by this appendix and installed in accordance with Section AS106.9.

c. In accordance with Section AS106.9.2, except as required to transfer roof loads to the plaster skins in accordance with Section AS106.11.

d. For walls with a different plaster on each side, the lower value shall be used.

2. Assembly shall be the width of the strawbale wall and shall comply with Section AS106.11.
3. Discontinuous lumber shall be spliced with a metal strap with not less than a 500-pound (2224 N) allowable wind or seismic load tension capacity. Where the wall line includes a braced wall panel the strap shall have not less than a 2,000-pound (8896 N) capacity.
4. Panel joints shall be blocked.
5. Roof and ceiling framing shall be attached to the roof-bearing assembly in accordance with Table R602.3(1), Items 2 and 6.
6. Where the roof-bearing assembly spans wall openings, it shall comply with Section AS106.12.3.1

AS106.12.3.1 Roof-bearing assembly spanning openings. Roof-bearing assemblies that span openings in strawbale walls shall comply with the following at each opening:

1. Lumber on each side of the assembly shall be of the dimensions and quantity required to span each opening in accordance with Table R602.7(1).
2. The required lumber in the assembly shall be supported at each side of the opening by the number of jack studs required by Table R602.7(1), or shall shall extend beyond the opening on both sides a distance, D, using the following formula:

$$D = S \times R/2 / (1-R) \qquad \textbf{(Equation AS-1)}$$

where:

D = Minimum distance (in feet) for required spanning lumber to extend beyond the opening

S = Span in feet

R = B_L / B_C

B_L = Design load on the wall (in pounds per lineal foot) in accordance with Sections R301.4 and R301.6

B_C = Allowable bearing capacity of the wall in accordance with Table AS106.12

AS106.13 Braced wall panels. Plastered strawbale walls used as braced wall panels for one-story buildings shall be in accordance with Section R602.10 and Tables AS106.13(1), AS106.13(2) and AS106.13(3). Wind design criteria shall be in accordance with Section R301.2.1. Seismic design criteria shall be in accordance with Section R301.2.2.

AS106.13.1 Bale wall thickness. The thickness of strawbale braced wall panels without their plaster shall be not less than 15 inches (381 mm).

AS106.13.2 Sill plates. Sill plates shall be in accordance with Table AS106.13(1).

AS106.13.3 Sill plate fasteners. Sill plates shall be fastened with not less than $^5/_8$-inch-diameter (15.9 mm) steel anchor bolts with 3-inch by 3-inch by $^3/_{16}$-inch (76.2 mm by 76.2 mm by 4.8 mm) steel washers, with not less than 7-inch (177.8 mm) embedment in a concrete or masonry foundation, or shall be an approved equivalent, with the spacing shown in Table AS106.13(1). Anchor bolts or other fasteners into framed floors shall be of an approved engineered design.

TABLE AS106.13(1)
PLASTERED STRAWBALE BRACED WALL PANEL TYPES

WALL DESIGNATION	PLASTER[a] (both sides)		SILL PLATES[b] (nominal size in inches)	ANCHOR BOLT[c] SPACING (inches on center)	MESH[d] (inches)	STAPLE SPACING[e] (inches on center)
	Type	Thickness (minimum in inches each side)				
A1	Clay	1.5	2 × 4	32	None	None
A2	Clay	1.5	2 × 4	32	2 × 2 high-density polypropylene	2
A3	Clay	1.5	2 × 4	32	2 × 2 × 14 gage	4
B	Soil-cement	1	4 × 4	24	2 × 2 × 14 gage	2
C1	Lime	$^7/_8$	2 × 4	32	17-gage woven wire	3
C2	Lime	$^7/_8$	4 × 4	24	2 × 2 × 14 gage	2
D1	Cement-lime	$^7/_8$	4 × 4	32	17 gage woven wire	2
D2	Cement-lime	$^7/_8$	4 × 4	24	2 × 2 × 14 gage	2
E1	Cement	$^7/_8$	4 × 4	32	2 × 2 × 14 gage	2
E2	Cement	1.5	4 × 4	24	2 × 2 × 14 gage	2

SI: 1 inch = 25.4 mm.

a. Plasters shall comply with Sections AS104.4.3 through AS104.4.8, AS106.7, AS106.8 and AS106.12.

b. Sill plates shall be Douglas fir-larch or southern pine and shall be preservative treated where required by the *California Residential Code*.

c. Anchor bolts shall be in accordance with Section AS106.13.3 at the spacing shown in this table.

d. Installed in accordance with Section AS106.9.

e. Staples shall be in accordance with Section AS106.9.2 at the spacing shown in this table.

TABLE AS106.13(2)
BRACING REQUIREMENTS FOR STRAWBALE-BRACED WALL PANELS BASED ON WIND SPEED

• EXPOSURE CATEGORY B[d] • 25-FOOT MEAN ROOF HEIGHT • 10-FOOT EAVE-TO-RIDGE HEIGHT[d] • 10-FOOT WALL HEIGHT[d] • 2 BRACED WALL LINES[d]			MINIMUM TOTAL LENGTH (FEET) OF STRAWBALE BRACED WALL PANELS REQUIRED ALONG EACH BRACED WALL LINE[a, b, c, d]		
Ultimate design wind speed (mph)	Story location	Braced wall line spacing (feet)	Strawbale-braced wall panel[e] A2, A3	Strawbale-braced wall panel[e] C1, C2, D1	Strawbale-braced wall panel[e] B, D2, E1, E2
≤ 110	One-story building	10	6.4	3.8	3.0
		20	8.5	5.1	4.0
		30	10.2	6.1	4.8
		40	13.3	6.9	5.5
		50	16.3	7.7	6.1
		60	19.4	8.3	6.6
≤ 115	One-story building	10	6.4	3.8	3.0
		20	8.5	5.1	4.0
		30	11.2	6.4	5.1
		40	14.3	7.2	5.7
		50	18.4	8.1	6.5
		60	21.4	8.8	7.0
≤ 120	One-story building	10	7.1	4.3	3.4
		20	9.0	5.4	4.3
		30	12.2	6.6	5.3
		40	16.3	7.7	6.1
		50	19.4	8.3	6.6
		60	23.5	9.2	7.3
≤ 130	One-story building	10	7.1	4.3	3.4
		20	10.2	6.1	4.8
		30	14.3	7.2	5.7
		40	18.4	8.1	6.5
		50	22.4	9.0	7.1
		60	26.5	9.5	7.6
≤ 140	One-story building	10	7.8	4.7	3.7
		20	11.2	6.4	5.1
		30	16.3	7.7	6.1
		40	21.4	8.8	7.0
		50	26.5	9.8	7.8
		60	30.6	11.0	8.3

For SI: 1 inch = 25.4 mm, 1 foot = 305 mm, 1 mile per hour = 0.447 m/s.

a. Linear interpolation shall be permitted.

b. All braced wall panels shall be without openings and shall have an aspect ratio (H:L) ≤ 2:1.

c. Tabulated minimum total lengths are for braced wall lines using single-braced wall panels with an aspect ratio (H:L) ≤ 2:1, or using multiple braced wall panels with aspect ratios (H:L) ≤ 1:1. For braced wall lines using two or more braced wall panels with an aspect ratio (H:L) > 1:1, the minimum total length shall be multiplied by the largest aspect ratio (H:L) of braced wall panels in that line.

d. Subject to applicable wind adjustment factors associated with "All methods" in Table R602.10.3(2)

e. Strawbale braced panel types indicated shall comply with Sections AS106.13.1 through AS106.13.3 and with Table AS106.13(1).

TABLE AS106.13(3)
BRACING REQUIREMENTS FOR STRAWBALE-BRACED WALL PANELS BASED ON SEISMIC DESIGN CATEGORY

• SOIL CLASS D[f] • WALL HEIGHT = 10 FEET[d] • 15 PSF ROOF-CEILING DEAD LOAD[d] • BRACED WALL LINE SPACING ≤ 25 FEET[d]			MINIMUM TOTAL LENGTH (FEET) OF STRAWBALE-BRACED WALL PANELS REQUIRED ALONG EACH BRACED WALL LINE[a, b, c, d]	
Seismic Design Category	Story location	Braced wall line length (feet)	Strawbale-braced wall panel[e] A2, C1, C2, D1	Strawbale-braced wall panel[e] B, D2, E1, E2
C	One-story building	10	5.7	4.6
		20	8.0	6.5
		30	9.8	7.9
		40	12.9	9.1
		50	16.1	10.4
D_0	One-story building	10	6.0	4.8
		20	8.5	6.8
		30	10.9	8.4
		40	14.5	9.7
		50	18.1	11.7
D_1	One-story building	10	6.3	5.1
		20	9.0	7.2
		30	12.1	8.8
		40	16.1	10.4
		50	20.1	13.0
D_2	One-story building	10	7.1	5.7
		20	10.1	8.1
		30	15.1	9.9
		40	20.1	13.0
		50	25.1	16.3

For SI: 1 inch = 25.4 mm, 1 foot = 305 mm, 1 pound per square foot = 0.0479 kPa.

a. Linear interpolation shall be permitted.

b. Braced wall panels shall be without openings and shall have an aspect ratio (H:L) ≤ 2:1.

c. Tabulated minimum total lengths are for braced wall lines using single braced wall panels with an aspect ratio (H:L) ≤ 2:1, or using multiple braced wall panels with aspect ratios (H:L) ≤ 1:1. For braced wall lines using two or more braced wall panels with an aspect ratio (H:L) > 1:1, the minimum total length shall be multiplied by the largest aspect ratio (H:L) of braced wall panels in that line.

d. Subject to applicable seismic adjustment factors associated with "All methods" in Table R602.10.3(4), except "Wall dead load."

e. Strawbale braced wall panel types indicated shall comply with Sections AS106.13.1 through AS106.13.3 and Table AS106.13(1).

f. Wall bracing lengths are based on a soil site class "D." Interpolation of bracing lengths between S_{ds} values associated with the seismic design categories is allowable where a site-specific S_{ds} value is determined in accordance with Section 1613.3 of the *California Building Code*.

AS106.14 Resistance to wind uplift forces. Plaster mesh in skins of strawbale walls that resist uplift forces from the roof assembly, as determined in accordance with Section R802.11, shall be in accordance with all of the following:

1. Plaster shall be any type and thickness allowed in Section AS104.
2. Mesh shall be any type allowed in Table AS106.13(1), and shall be attached to top plates or roof-bearing elements and to sill plates in accordance with Section AS106.9.2.
3. Sill plates shall be not less than nominal 2-inch by 4-inch (51 mm by 102 mm) with anchoring complying with Section R403.1.6.
4. Mesh attached with staples at 4 inches (51 mm) on center shall be considered to be capable of resisting uplift forces of 100 plf (1459 N/m) for each plaster skin.
5. Mesh attached with staples at 2 inches (51 mm) on center shall be considered to be capable of resisting uplift forces of 200 plf (2918 N/m) for each plaster skin.

AS106.15 Post-and-beam with strawbale infill. Post-and-beam with strawbale infill systems shall be in accordance with Figure AS105.1(4) and Items 1 through 6, or be of an approved engineered design.

1. Beams shall be of the dimensions and number of members in accordance with Table R602.7(1), where the space between posts equals the span in the table.
2. Beam ends shall bear over posts not less than $1^1/_2$ inches (38 mm) or be supported by a framing anchor in accordance with Table R602.7(1).
3. Discontinuous beam ends shall be spliced with a metal strap with not less than 1,000-pound (454 kg) wind or seismic load tension capacity. Where the wall line includes a braced wall pane,l the strap shall have not less than a 4,000-pound (1814 kg) capacity.
4. Each post shall equal NJ + 1 in accordance with Table R602.7(1), where the space between posts equals the span in the table.
5. Posts shall be connected to the beam by an approved means.

6. Roof and ceiling framing shall be attached to the beam in accordance with Table R602.3(1), Items 2 and 6.

SECTION AS107
FIRE RESISTANCE

AS107.1 Fire-resistance rating. Strawbale walls shall not be considered to exhibit a fire-resistance rating, except for walls constructed in accordance with Section AS107.1.1 or AS107.1.2. Alternately, fire-resistance ratings of strawbale walls shall be determined in accordance with Section R302.

AS107.1.1 One-hour-rated clay-plastered wall. One-hour fire-resistance-rated nonload-bearing clay plastered strawbale walls shall comply with all of the following:

1. Bales shall be laid flat or on-edge in a running bond.
2. Bales shall maintain thickness of not less than 18 inches (457 mm).
3. Bales shall have a minimum density of 7.5 pounds per cubic foot (120 kg/m^3).
4. Gaps shall be stuffed with straw-clay.
5. Clay plaster on each side of the wall shall be not less than 1 inch (25 mm) thick and shall be composed of a mixture of 3 parts clay, 2 parts chopped straw and 6 parts sand, or an alternative approved clay plaster.
6. Plaster application shall be in accordance with Section AS104.4.3.3 for the number and thickness of coats.

AS107.1.2 Two-hour-rated cement-plastered wall. Two-hour fire-resistance-rated nonload-bearing cement-plastered strawbale walls shall comply with all of the following:

1. Bales shall be laid flat or on-edge in a running bond.
2. Bales shall maintain a thickness of not less than 14 inches (356 mm).
3. Bales shall have a minimum density of 7.5 pounds per cubic foot (120 kg/m^3).
4. Gaps shall be stuffed with straw-clay.
5. A single section of $^1/_2$-inch (38 mm) by 17-gage galvanized woven wire mesh shall be attached to wood members with $1^1/_2$-inch (38 mm) staples at 6 inches (152 mm) on center. 9 gage U-pins with not less than 8-inch (203 mm) legs shall be installed at 18 inches (457 mm) on center to fasten the mesh to the bales.
6. Cement plaster on each side of the wall shall be not less than 1 inch (25 mm) thick.
7. Plaster application shall be in accordance with Section AS104.4.8 for the number and thickness of coats.

AS107.2 Openings in rated walls. Openings and penetrations in bale walls required to have a fire-resistance rating shall satisfy the same requirements for openings and penetrations as prescribed in this code.

AS107.3 Clearance to fireplaces and chimneys. Strawbale surfaces adjacent to fireplaces or chimneys shall be finished with not less than $^3/_8$-inch-thick (10 mm) plaster of any type permitted by this appendix. Clearance from the face of such plaster to fireplaces and chimneys shall be maintained as required from fireplaces and chimneys to combustibles in Chapter 10, or as required by manufacturer's instructions, whichever is more restrictive.

SECTION AS108
THERMAL INSULATION

AS108.1 R-value. The unit *R*-value of a strawbale wall with bales laid flat is R-1.55 for each inch of bale thickness. The unit R-value of a strawbale wall with bales on-edge is R-1.85 for each inch of bale thickness.

AS108.2 Compliance with Section R302.10.1. Straw bales meet the requirements for insulation materials in Section R302.10.1 for flame spread index and smoke-developed index as tested in accordance with ASTM E84.

SECTION AS109
REFERENCED STANDARDS

ASTM C5—10	Standard Specification for Quicklime for Structural Purposes	AS104.4.6.1
ASTM C109/C 109M—2015el	Standard Test Method for Compressive Strength of Hydraulic Cement Mortars	AS106.6.1
ASTM C141/C 141M—14	Standard Specification for Hydrated Hydraulic Lime for Structural Purposes	AS104.4.6.1
ASTM C206—14	Standard Specification for Finishing Hydrated Lime	AS104.4.6.1
ASTM C926—15B	Standard Specification for Application of Portland Cement Based Plaster	AS104.4.7 AS104.4.8
ASTM C1707—11	Standard Specification for Pozzolanic Hydraulic Lime for Structural Purposes	AS104.4.6.1
ASTM E2392/ ASTM E2392M —10	Standard Guide for Design of Earthen Wall Building Systems	AS104.4.3.2
ASTM BS1 ASTM BS EN 459 —2015	Part 1: Building Lime. Definitions, Specifications and Conformity Criteria; Part 2: Test Methods	AS104.4.6.1

CALIFORNIA RESIDENTIAL CODE – MATRIX ADOPTION TABLE APPENDIX T – SOLAR-READY PROVISIONS—DETACHED ONE- AND TWO-FAMILY DWELLINGS AND TOWNHOUSES

(Matrix Adoption Tables are nonregulatory, intended only as an aid to the code user. See Chapter 1 for state agency authority and building applications.)

Adopting agency	BSC	BSC-CG	SFM	HCD			DSA			OSHPD						BSCC	DPH	AGR	DWR	CEC	CA	SL	SLC
				1	2	1/AC	AC	SS	SS/CC	1	1R	2	3	4	5								
Adopt entire chapter																							
Adopt entire chapter as amended (amended sections listed below)																							
Adopt only those sections that are listed below																							
Chapter / Section																							

APPENDIX T [RE]

SOLAR-READY PROVISIONS—DETACHED ONE- AND TWO-FAMILY DWELLINGS AND TOWNHOUSES

The provisions contained in this appendix are not mandatory unless specifically adopted by a state agency or referenced in the adopting ordinance.

User note:

About this appendix: *Harnessing the heat or radiation from the sun's rays is a method to reduce the energy consumption of a building. Although Appendix T does not require solar systems to be installed for a building, it does require the space(s) for installing such systems, providing pathways for connections and requiring adequate structural capacity of roof systems to support solar systems.*

Section numbers in parenthesis are those in Appendix A of the residential provisions of the International Energy Conservation Code®.

SECTION T101 SCOPE

T101.1 (RA101.1) General. These provisions shall be applicable for new construction where solar-ready provisions are required.

SECTION T102 (RA102) GENERAL DEFINITION

T102.1 General. The following term shall, for the purpose of this appendix, have the meaning shown herein.

SOLAR-READY ZONE. A section or sections of the roof or building overhang designated and reserved for the future installation of a solar photovoltaic or solar thermal system.

SECTION T103 (RA103) SOLAR-READY ZONE

T103.1 General. New detached one- and two-family dwellings, and townhouses with not less than 600 square feet (55.74 m^2) of roof area oriented between 90 degrees and 270 degrees of true north, shall comply with Sections T103.2 through T103.10.

Exceptions:

1. New residential buildings with a permanently installed on-site renewable energy system.
2. A building where all areas of the roof that would otherwise meet the requirements of Section T103 are in full or partial shade for more than 70 percent of daylight hours annually

T103.2 (RA103.2) Construction document requirements for solar-ready zone. Construction documents shall indicate the solar-ready zone.

T103.3 (RA103.3) Solar-ready zone area. The total solar-ready zone area shall be not less than 300 square feet (27.87 m^2) exclusive of mandatory access or setback areas as required by the *California Fire Code*. New townhouses three stories or less in height above grade plane and with a total floor area less than or equal to 2,000 square feet (185.8 m^2) per dwelling shall have a solar-ready zone area of not less than 150 square feet (13.94 m^2). The solar-ready zone shall be composed of areas not less than 5 feet (1524 mm) in width

and not less than 80 square feet (7.44 m^2) exclusive of access or set-back areas as required by the *California Fire Code*.

T103.4 (RA103.4) Obstructions. Solar-ready zones shall be free from obstructions, including but not limited to vents, chimneys, and roof-mounted equipment.

T103.5 Shading. The solar-ready zone shall be set back from any existing or new, permanently affixed object on the building or site that is located south, east or west of the solar zone a distance not less than two times the object's height above the nearest point on the roof surface. Such objects include, but are not limited to, taller portions of the building itself, parapets, chimneys, antennas, signage, rooftop equipment, trees and roof plantings.

T103.6 Capped roof penetration sleeve. A capped roof penetration sleeve shall be provided adjacent to a solar-ready zone located on a roof slope of not greater than 1 unit vertical in 12 units horizontal (8-percent slope). The capped roof penetration sleeve shall be sized to accommodate the future photovoltaic system conduit, but shall have an inside diameter of not less than $1^1/_4$ inches (32 mm).

T103.7 (RA103.5) Roof load documentation. The structural design loads for roof dead load and roof live load shall be clearly indicated on the construction documents.

T103.8 (RA103.6) Interconnection pathway. Construction documents shall indicate pathways for routing of conduit or plumbing from the solar-ready zone to the electrical service panel or service hot water system.

T103.9 (RA103.7) Electrical service reserved space. The main electrical service panel shall have a reserved space to allow installation of a dual pole circuit breaker for future solar electric installation and shall be labeled "For Future Solar Electric." The reserved space shall be positioned at the opposite (load) end from the input feeder location or main circuit location.

T103.10 (RA103.8) Construction documentation certificate. A permanent certificate, indicating the solar-ready zone and other requirements of this section, shall be posted near the electrical distribution panel, water heater or other conspicuous location by the builder or registered design professional.

APPENDIX U

RESERVED

CALIFORNIA RESIDENTIAL CODE – MATRIX ADOPTION TABLE
APPENDIX V – SWIMMING POOL SAFETY ACT

(Matrix Adoption Tables are nonregulatory, intended only as an aid to the code user. See Chapter 1 for state agency authority and building applications.)

Adopting agency	BSC	BSC-CG	SFM	HCD			DSA			OSHPD						BSCC	DPH	AGR	DWR	CEC	CA	SL	SLC
				1	2	1/AC	AC	SS	SS/CC	1	1R	2	3	4	5								
Adopt entire chapter																							
Adopt entire chapter as amended (amended sections listed below)																							
Adopt only those sections that are listed below																							
Chapter / Section																							

APPENDIX V

SWIMMING POOL SAFETY ACT

(Note: See Chapter 31, Section 3109 of the California Building Code, Title 24, Part 2.)

AV100 Private swimming pools (statewide). *Sections AV100.1 through AV100.9 contain the text of Article 2.5 (commencing with Section 115920) of Chapter 5 of Part 10 of Division 104 of the Health and Safety Code, which has been reprinted in alignment with the existing format of this code.*

NOTE: These regulations are subject to local government modification. You should verify the applicable local government requirements at the time of application for a building permit.

Authority: *Health and Safety Code Section 18942(b)*
Reference: *Health and Safety Code Section 18942(b); Chapter 925, Statutes of 1996*

AV100.1 Definitions. *As used in this division, the following terms have the following meanings:*

ANSI/APSP PERFORMANCE STANDARD *means a standard that is accredited by the American National Standards Institute (ANSI) and published by the Association of Pool and Spa Professionals (APSP).*

APPROVED SAFETY POOL COVER *means a manually or power-operated safety pool cover that meets all of the performance standards of the American Society for Testing and Materials (ASTM), in compliance with Standard F1346-91.*

ENCLOSURE *means a fence, wall or other barrier that isolates a swimming pool from access to the home.*

EXIT ALARMS *means devices that make audible, continuous alarm sounds when any door or window that permits access from the residence to the pool area, that is without any intervening enclosure, is opened or is left ajar. Exit alarms may be battery operated or may be connected to the electrical wiring of the building.*

PUBLIC SWIMMING POOL *means a swimming pool operated for the use of the general public with or without charge, or for the use of the members and guests of a private club. Public swimming pool does not include a swimming pool located on the grounds of a private single-family home.*

SUCTION OUTLET *means a fitting or fixture typically located at the bottom or on the sides of a swimming pool that conducts water to a recirculating pump.*

SWIMMING POOL *or* ***POOL*** *means any structure intended for swimming or recreational bathing that contains water over 18 inches (457 mm) deep. Swimming pool includes in-ground and above-ground structures and includes, but is not limited to, hot tubs, spas, portable spas and nonportable wading pools.*

Authority: *Health and Safety Code Section 18942(b)*
Reference: *Health and Safety Code Section 115921; Chapter 925, Statutes of 1996; Chapter 679, Statutes of 2012*

AV100.2 Construction permit; safety features required.

(a) Except as provided in Section AV100.5, when a building permit is issued for the construction of a new swimming pool or spa or the remodeling of an existing swimming pool or spa at a private single-family home, the respective swimming pool or spa shall be equipped with at least two of the following seven drowning prevention safety features:

1. *An enclosure that meets the requirements of Section AV100.3 and isolates the swimming pool or spa from the private single-family home.*
2. *Removable mesh fencing that meets American Society for Testing and Materials (ASTM) Specifications F2286 standards in conjunction with a gate that is self-closing and self-latching and can accommodate a key lockable device.*
3. *An approved safety pool cover, as defined in Section AV100.1.*

4. *Exit alarms on the private single-family home's doors that provide direct access to the swimming pool or spa. The exit alarm may cause either an alarm noise or a verbal warning, such as a repeating notification that "the door to the pool is open."*
5. *A self-closing, self-latching device with a release mechanism placed no lower than 54 inches (1372 mm) above the floor on the private single-family home's doors providing direct access to the swimming pool or spa.*
6. *An alarm that, when placed in a swimming pool or spa will sound upon detection of accidental or unauthorized entrance into the water. The alarm shall meet and be independently certified to the ASTM Standard F2208 "Standard Safety Specification for Residential Pool Alarms," which includes surface motion, pressure, sonar, laser and infrared type alarms. A swimming protection alarm feature designed for individual use, including an alarm attached to a child that sounds when the child exceeds a certain distance or becomes submerged in water, is not a qualifying drowning prevention safety feature.*
7. *Other means of protection, if the degree of protection afforded is equal to or greater than that afforded by any of the features set forth above and has been independently verified by an approved testing laboratory as meeting standards for those features established by the ASTM or the American Society of Mechanical Engineers (ASME).*

(b) Before the issuance of a final approval for the completion of permitted construction or remodeling work, the local building code official shall inspect the drowning safety prevention features required by this section and, if no violations are found, shall give final approval.

Authority: *Health and Safety Code Section 18942(b)*
Reference: *Health and Safety Code Section 115922; Chapter 925, Statutes of 1996; Chapter 478, Statutes of 2006; Chapter 670, Statutes 2017*

AV100.3 Enclosure; required characteristics. *An enclosure shall have all of the following characteristics:*

1. *Any access gates through the enclosure open away from the swimming pool and are self-closing with a self-latching device placed no lower than 60 inches (1524 mm) above the ground.*
2. *A minimum height of 60 inches (1524 mm).*
3. *A maximum vertical clearance from the ground to the bottom of the enclosure of 2 inches (51 mm).*
4. *Gaps or voids, if any, do not allow passage of a sphere equal to or greater than 4 inches (102 mm) in diameter.*
5. *An outside surface free of protrusions, cavities or other physical characteristics that would serve as handholds or footholds that could enable a child below the age of five years to climb over.*

Authority: *Health and Safety Code Section 18942(b)*
Reference: *Health and Safety Code Section 115923; Chapter 925, Statutes of 1996*

AV100.4 Agreements to build; notice of provisions.

(a) Any person entering into an agreement to build a swimming pool or spa, or to engage in permitted work on a pool or spa covered by this article, shall give the consumer notice of the requirements of this article.

(b) Pursuant to existing law, the Department of Health Services shall have available on the department's web site, commencing January 1, 2007, approved pool safety information available for consumers to download. Pool contractors are encouraged to share this information with consumers regarding the potential dangers a pool or spa poses toddlers. Additionally, pool contractors may provide the consumer with swimming pool safety materials produced from organizations such as the United States Consumer Product Safety Commission, Drowning Prevention Foundation, California Coalition for Children's Safety & Health, Safe Kids Worldwide, Association of Pool and Spa Professionals, or the American Academy of Pediatrics.

Authority: *Health and Safety Code Section 18942(b)*
Reference: *Health and Safety Code Section 115924; Chapter 925, Statutes of 1996; Chapter 478, Statutes of 2006*

AV100.5 Exempt facilities. *The requirements of this article do not apply to any of the following:*

1. *Public swimming pools.*
2. *Hot tubs or spas with locking safety covers that comply with the American Society for Testing and Materials (ASTM F1346).*
3. *An apartment complex or any residential setting other than a single-family home.*

Authority: *Health and Safety Code Section 18942(b)*
Reference: *Health and Safety Code Section 115925; Chapter 925, Statutes of 1996; Chapter 670, Statutes of 2017*

AV100.6 Application to facilities regulated by Department of Social Services. *This division does not apply to any facility regulated by the State Department of Social Services even if the facility is also used as a private residence of the operator. Pool safety in those facilities shall be regulated pursuant to regulations adopted therefor by the State Department of Social Services.*

Authority: *Health and Safety Code Section 18942(b)*
Reference: *Health and Safety Code Section 115926; Chapter 925, Statutes of 1996*

AV100.7 Modification and interpretation of division. *Notwithstanding any other provision of law, this article shall not be subject to further modification or interpretation by any regulatory agency of the state, this authority being reserved exclusively to local jurisdictions, as provided for in Item 7 of AV100.2 and Item 3 of AV100.5.*

Authority: *Health and Safety Code Section 18942(b)*
Reference: *Health and Safety Code Section 115927; Chapter 925, Statutes of 1996*

AV100.8 Construction requirements for building a pool or spa. *Whenever a building permit is issued for the construction a new swimming pool or spa, the pool or spa shall meet all of the following requirements:*

1. *The suction outlets of the pool or spa for which the permit is issued shall be equipped to provide circulation throughout the pool or spa as prescribed in Paragraphs 2 and 3.*
2. *The swimming pool or spa shall either have at least two circulation suction outlets per pump that shall be hydraulically balanced and symmetrically plumbed through one or more "T" fittings, and that are separated by a distance of at least three feet in any dimension between the suction outlets, or be designed to use alternatives to suction outlets, including, but not limited to, skimmers or perimeter overflow systems to conduct water to the recirculation pump.*
3. *The circulation system shall have the capacity to provide a complete turnover of pool water, as specified in Section 3124B of Chapter 31B of the California Building Standards Code (Title 24 of the California Code of Regulations).*
4. *Suction outlets shall be covered with anti-entrapment grates, as specified in the ANSI/APSP-16 performance standard or successor standard designated by the federal Consumer Product Safety Commission, that cannot be removed except with the use of tools. Slots of openings in the grates or similar protective devices shall be of a shape, area and arrangement that would prevent physical entrapment and would not pose any suction hazard to bathers.*
5. *Any backup safety system that an owner of a new swimming pools or spa may choose to install in addition to the requirements set forth in subdivisions (1) through (4) above shall meet the standards as published in the document, "Guidelines for Entrapment Hazards: Making Pools and Spas Safer," Publication Number 363, March 2005, United States Consumer Products Safety Commission.*

Authority: *Health and Safety Code Section 18942(b)*
Reference: *Health and Safety Code Section 115928; Chapter 679, Statutes of 2002; Chapter 62, Statutes of 2003; Chapter 478, Statutes of 2006; Chapter 596, Statutes of 2007; Chapter 679, Statutes of 2012*

AV100.8.5 (formerly AV100.8#6) Suction outlet upgrade requirements during remodel or modification. *Whenever a building permit is for the remodel or modification of any existing swimming pool, toddler pool, or spa, the permit shall require that the suction outlet or suction outlets of the existing swimming pool, toddler pool, or spa be upgraded so as to be equipped with anti-entrapment grates, as specified in the ANSI/APSP-16 performance standard or a successor standard designated by the federal Consumer Product Safety Commission.*

Authority: *Health and Safety Code Section 18942(b)*
Reference: *Health and Safety Code Section 115928.5; Chapter 596, Statutes of 2007; Chapter 679, Statutes of 2012*

AV100.9 Informative documents.

1. *The legislature encourages a private entity, in consultation with the Epidemiology and Prevention for Injury Control Branch of the department, to produce an informative brochure or booklet, for cousumer use, explaining the child drowning hazards of, possible safety measures for, and appropriate drowning hazard prevention measures for, home swimming pools and spas, and to donate the document to the department.*
2. *The legislature encourages the private entity to use existing documents from the United States Consumer Product Safety Commission on pool safety.*
3. *If a private entity produces the document described in Subdivisions 1 and 2 and donates it to the department, the department shall review and approve the brochure or booklet.*
4. *Upon approval of the document by the department, the document shall become the property of the state and a part of the public domain. The department shall place the document on its website in a format that is readily available for downloading and for publication. The department shall review the document in a timely and prudent fashion and shall complete the review within 18 months of receipt of the document from a private entity.*

Authority: *Health and Safety Code Section 18942(b)*
Reference: *Health and Safety Code Section 115929; Chapter 422, Statutes of 2003*

CALIFORNIA RESIDENTIAL CODE – MATRIX ADOPTION TABLE
APPENDIX W – AREAS PROTECTED BY THE FACILITIES OF THE CENTRAL VALLEY FLOOD PROTECTION PLAN

(Matrix Adoption Tables are nonregulatory, intended only as an aid to the code user. See Chapter 1 for state agency authority and building applications.)

Adopting agency	BSC	BSC -CG	SFM	HCD			DSA			OSHPD						BSCC	DPH	AGR	DWR	CEC	CA	SL	SLC
				1	2	1/AC	AC	SS	SS/ CC	1	1R	2	3	4	5								
Adopt entire chapter				X															X				
Adopt entire chapter as amended (amended sections listed below)																							
Adopt only those sections that are listed below																							
Chapter / Section																							

APPENDIX W

AREAS PROTECTED BY THE FACILITIES OF THE CENTRAL VALLEY FLOOD PROTECTION PLAN

Note: The effective date of these standards shall be March 1, 2012 or ninety (90) days after the corresponding maps are completed and readily available to the general public, whichever is the later date.

Table W301.2(1) Revise as follows:

Replace the Flood Hazards cell in table as follows:

FLOOD HAZARDS	
NFIP[g]	CVFPP[j]

j. Jurisdictions with Areas Protected by the Facilities of the Central Valley where Flood Levels are Anticipated to Exceed Three Feet for the 200-Year Flood Event, as defined in Section AW102, shall fill in this part of the table with "Yes" or "No".

AW101 General. *The provisions of this section shall apply to new construction, changes of use or repair and to substantial improvement and restoration of substantial damage of buildings in areas protected by the facilities of the Central Valley Flood Protection Plan, as established in Table R301.2(1), where flood levels are anticipated to exceed three feet for the 200-year flood event. Except as specifically required by this section, buildings and structures shall meet applicable provisions of this code.*

AW101.1 Construction documents. *Construction documents shall include the WSEL200 and the elevation(s) of the floor(s), and, as applicable, the elevation(s) and slopes of roofs, of the building or structure.*

AW102 Definitions.

The following words and terms shall, for the purposes of this section, have the meanings shown.

AREAS PROTECTED BY THE FACILITIES OF THE CENTRAL VALLEY FLOOD PROTECTION PLAN WHERE FLOOD LEVELS ARE ANTICIPATED TO EXCEED THREE FEET FOR THE 200-YEAR FLOOD EVENT. *Geographical areas identified by the state as "Areas Protected by the Facilities of the Central Valley Flood Protection Plan where Flood Levels are Anticipated to Exceed Three Feet for the 200-Year Flood Event" in accordance with the Health and Safety Code Section 50465. Published data from the California Department of Water Resources can be obtained online at the following website: www.water.ca.gov/BuildingCodes.*

Note: *The facilities of the Central Valley Flood Protection Plan are identified in the following counties: Butte, Colusa, Fresno, Glenn, Lake, Madera, Merced, Plumas, Sacramento, San Joaquin, Solano, Stanislaus, Sutter, Tehama, Yolo and Yuba. Determination of additional facilities is ongoing.*

CENTRAL VALLEY. *Any lands in the bed or along or near the banks of the Sacramento River and the San Joaquin River, and any of their tributaries or connected therewith, or upon any land adjacent thereto, or within any of the overflow basins thereof, or upon any land susceptible to overflow therefrom. The following counties and the incorporated municipalities within these counties, in whole or in part, are in the Central Valley: Alpine, Amador, Butte, Calaveras, Colusa, El Dorado, Fresno, Glenn, Lake, Lassen, Madera, Mariposa, Merced, Modoc, Napa, Nevada, Placer, Plumas, Sacramento, San Benito, San Joaquin, Shasta, Sierra, Siskiyou, Solano, Stanislaus, Sutter, Tehama, Tuolumne, Yolo and Yuba. A map that delineates the Central Valley can be*

obtained online at the following website: www.water.ca.gov/Building Codes.

EVACUATION LOCATION. *A location no less than one (1) foot (0.30 meter) above the WSEL200 where occupants are expected to congregate pending evacuation and from which occupants may be evacuated during conditions of flooding, such as a space within the building that has an exit door or operable window; a deck, balcony, porch, rooftop platform or rooftop area; or combinations thereof.*

FACILITIES OF THE CENTRAL VALLEY FLOOD PROTECTION PLAN. *The facilities referenced herein include the facilities of State Plan of Flood Control and other flood management facilities in the Central Valley evaluated under the Central Valley Flood Protection Plan, which will be completed in 2012 and updated every 5 years thereafter. The facilities of State Plan of Flood Control include the state and federal flood control works (levees, weirs, channels, and other features) of the Sacramento River Flood Control Project described in Water Code Section 8350, and flood control projects in the Sacramento River and San Joaquin River watersheds authorized pursuant to Article 2 (commencing with Water Code section 12648) of Chapter 2 of Part 6 of Division 6 for which the Central Valley Flood Protection Board or the Department of Water Resources has provided the assurances of nonfederal cooperation to the United States, and those facilities identified in Water Code Section 8361.*

ROUTE TO THE EVACUATION LOCATION. *The path through and along which occupants move from the habitable areas of a building or structure that are below the WSEL200 to the evacuation location.*

SUBSTANTIAL DAMAGE. *Damage of any origin sustained by a structure whereby the cost of restoring the structure to its before-damaged condition would equal or exceed 50 percent of the market value of the structure before the damage occurred.*

SUBSTANTIAL IMPROVEMENT. *Any repair, reconstruction, rehabilitation, addition or improvement of a building or structure, the cost of which equals or exceeds 50 percent of the market value of the structure before the improvement or repair is started. If the structure has sustained damage, any repairs are considered substantial improvement regardless of the actual repair work performed. The term does not, however, include either:*

1. *Any project for improvement of a building required to correct existing health, sanitary or safety code violations identified by the building official and that area the minimum necessary to assure safe living conditions.*
2. *Any alteration of a historic structure provided that the alteration will not preclude the structure's continued designation as a historic structure.*

WSEL200. *The water surface elevation (WSEL) of the 200-year flood event that is identified by the state when it identifies areas that receive protection from the facilities of the Central Valley Flood Protection Plan.*

AW103 Structural stability. *Portions of buildings and structures that support evacuation locations shall be designed, constructed, connected and anchored to resist flotation, collapse or permanent lateral movement resulting from the hydrostatic loads anticipated during conditions of flooding anticipated for the 200-year flood event.*

Exception: *When one flood vent (minimum) is provided on two opposite sides of the building or structure that comply with Figure AW103.*

AW103.1 Determination of loads. *Hydrostatic loads, based on the depth of water determined by the WSEL200 shall be determined in accordance with Chapter 5 of ASCE 7. Reduction of hydrostatic loads may be accomplished by allowing for the automatic entry and exit of floodwaters to minimize unbalanced loads. Such means shall be designed by a registered design professional and include, but are not limited to, openings, valves, and panels designed to yield under load.*

AW104 Evacuation Locations. *An evacuation location and a route to the evacuation location shall be provided.*

AW104.1 Route to evacuation location. *A route shall be allowed through any number of intervening rooms or spaces. Doors along the route shall be openable without the use of a key, lock, special knowledge or effort.*

AW104.2 minimum size requirements. *Evacuation locations shall provide a minimum gross floor area of 7 square feet (0.65 m^2) per occupant, based on the occupant load of the portions of the building that are below WSEL200. The area provided shall be adequate to accommodate the occupant load of the upper levels as well as the anticipated occupant load from the area below the WSEL200.*

AW105 Space within the building. *If the evacuation location is a space within a building, the evacuation location shall be provided with a means for occupants to be evacuated out of the building specified in Section AW105.1, AW105.2 or AW105.3. The means for occupants to be evacuated out of the building shall address the mobility of the occupants.*

AW105.1 Windows, minimum size and dimensions. *A minimum of one window shall be provided that meet the minimum size, minimum dimensions and operational constraints of Section R310. The number of such windows shall be appropriate for the occupancy or occupancies of the portions of the building that are below WSEL200.*

Note: *It is the intent of this section that windows be of sufficient number, sizes and dimensions to reasonably accommodate the needs and limitations of the occupants of the building. Reasonable judgment in the application of this requirement must be exercised by the building official.*

AW105.2 Exterior doors to decks, balconies and porches. *Exterior doors to decks, balconies and porches shall be sized in accordance with Section R311.*

AW105.3 Means of escape to rooftops from spaces within a building. *The means of escape to rooftops shall be permitted to be provided by a stairway, ramp, alternating tread device, fixed ladder or other means approved by the building official.*

AW106 Decks and balconies that are evacuation locations. *Decks and balconies that have finish floors no less than one (1) foot (0.30 meter) above the WSEL200 shall be permitted to be evacuation locations. When a deck or balcony used as an evacuation location is not at the same level as a floor within the building, it shall be permitted to be accessed by a stairway, ramp, alternating tread device, fixed ladder or other means approved by the building official.*

AW106.1 Live load. *Decks and balconies that are evacuation locations shall be designed for the live load required in Table R301.5.*

AW106.2 Evacuation route. *Evacuation routes to decks and balconies that are evacuation locations shall be permitted to be provided by a stairway, ramp, alternating tread device, fixed ladder or other means approved by the building official.*

AW107 Rooftop evacuation locations. *Rooftop evacuation locations shall be permitted to include rooftop platforms and rooftop areas provided that they are no less than one (1) foot (0.30 meter) above the WSEL200. A minimum horizontal distance of 3 feet (0.91 meter) shall be provided between the lower edge of the rooftop evacuation location access point and the evacuation location lower perimeter.*

AW107.1 Rooftop platforms required. *A rooftop platform shall be provided if the roof covering materials are:*

1. *Clay tile, concrete tile, slate shingles, wood shingles or wood shakes, and the roof slope is three units vertical in 12 units horizontal (25 percent slope) or greater.*
2. *Metal roof panels or metal roof shingles, and the roof slope is one unit vertical in 12 units horizontal (8.33 percent slope) or greater.*

AW107.2 Roof live loads. *Roof areas that are rooftop evacuation locations and roofs that support rooftop platforms that are evacuation locations shall be designed for the roof live load required for the occupancy as required in CBC Table 1607.2.*

AW107.3 Evacuation routes to rooftop evacuation locations. *Evacuation routes to rooftop evacuation locations shall be permitted to be provided by a stairway, ramp, alternating tread device, fixed ladder or other means approved by the building official.*

AW107.4 Perimeter protection. *The perimeter of rooftop evacuation locations shall be protected by:*

1. *Guards per Section R312 if a rooftop platform is provided; or*
2. *A railing that is 12 inches (305 mm) in height if a sloped roof is provided.*

AW107.5 Utility/equipment buffer zone. *A separation of 48 inches shall be provided between an evacuation location and any mechanical equipment, photovoltaic system, utility service drop or other utility line. Electrical service lines shall not pass over evacuation locations.*

AW108 Attics that are evacuation locations. *Attics that have finish floors no less than one (1) foot above the WSEL200 shall be permitted to be evacuation locations.*

AW108.1 Headroom. *When an attic is used as an evacuation location, the minimum headroom of the required area shall be 30 inches (762 mm) with 50 percent of the required area having a headroom of 60 inches (1524 mm).*

AW108.2 Attic flooring. *The required area of the evacuation location shall be solidly sheathed.*

AW108.3 Attic live loads. *Attic areas that are used as evacuation locations shall be designed for the attic with limited live load requirement in Table R301.5.*

AW108.4 Evacuation routes to attic evacuation locations. *In Group R-3.1 occupancies that are subject to the requirements of Chapter 11A or 11B, such requirements shall apply to the evacuation routes to attics. In Group R-3 occupancies, evacuation routes to attic evacuation locations shall be permitted to be provided by a stairway, ramp, alternating tread device, fixed ladder or other means approved by the building official.*

AW108.5 Means of escape from attics. *The means of escape from attics shall comply with Section AW105.*

AW109 Alternate means of protection.

AW109.1 Request for approval of alternate means of protection. *Requests for approval to use an alternative means of protection shall be made in writing to the building official by the owner or the owner's authorized representative. The request shall be accompanied by a full statement of the conditions and sufficient evidence that the proposed alternate means of protection provides reasonable protection to occupants. The building official shall require the owner to obtain a written statement from the applicable emergency management authority regarding plans and processes related to notification of anticipated conditions of flooding, warnings, evacuations and other pertinent conditions relative to the proximity of nearby levees. The building official shall also require the owner to obtain a written statement and findings from the entity that has jurisdiction over the management, maintenance, monitoring and control of flood protection works in the vicinity of the location of the owner's property, such statement shall comment on the viability of the proposed alternate means of protection. The building official may request written statements from the Central Valley Flood Protection Board, the California Department of Water Resources and the California Emergency Management Agency.*

Approval of a request for use of an alternative means of protection made pursuant to these provisions shall be limited to the particular case covered by the request and shall not be construed as establishing any precedent for any future request except in substantially equivalent situations.

> ***Note:*** *Contact information for the California Department of Water Resources and the Department's Directory of Flood Officials, which includes levee and reclamation district boundary maps, is available online at the following website: www.water.ca.gov/BuildingCodes. The Department of Water Resources Building Code Project Engineer can be contacted at*

916-574-1451. The Central Valley Flood Control Board Chief Engineer can be contacted at 916-574-0609. The California Emergency Management Agency Inland Region Program Manager can be contacted at 916-845-8488.

AW109.2 Appeals. *When a request for an alternate means of protection has been denied by the building official, the applicant may file a written appeal with the board of appeals. In considering such appeal, the board of appeals may provide additional information to, and request additional written statements from the Central Valley Flood Protection Board, the California Department of Water Resources and the California Emergency Management Agency. If such additional written statements are provided, the board of appeals shall consider those statements.*

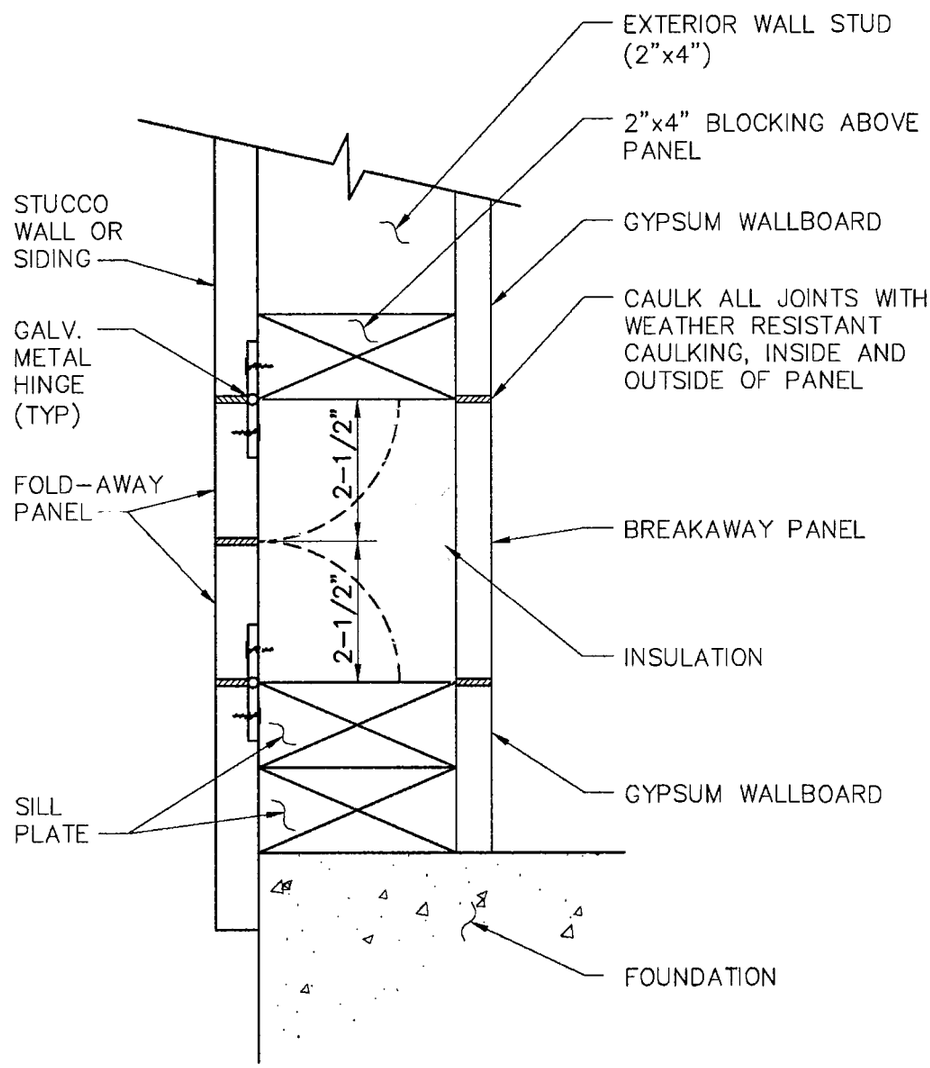

FIGURE K103.1

N.T.S.

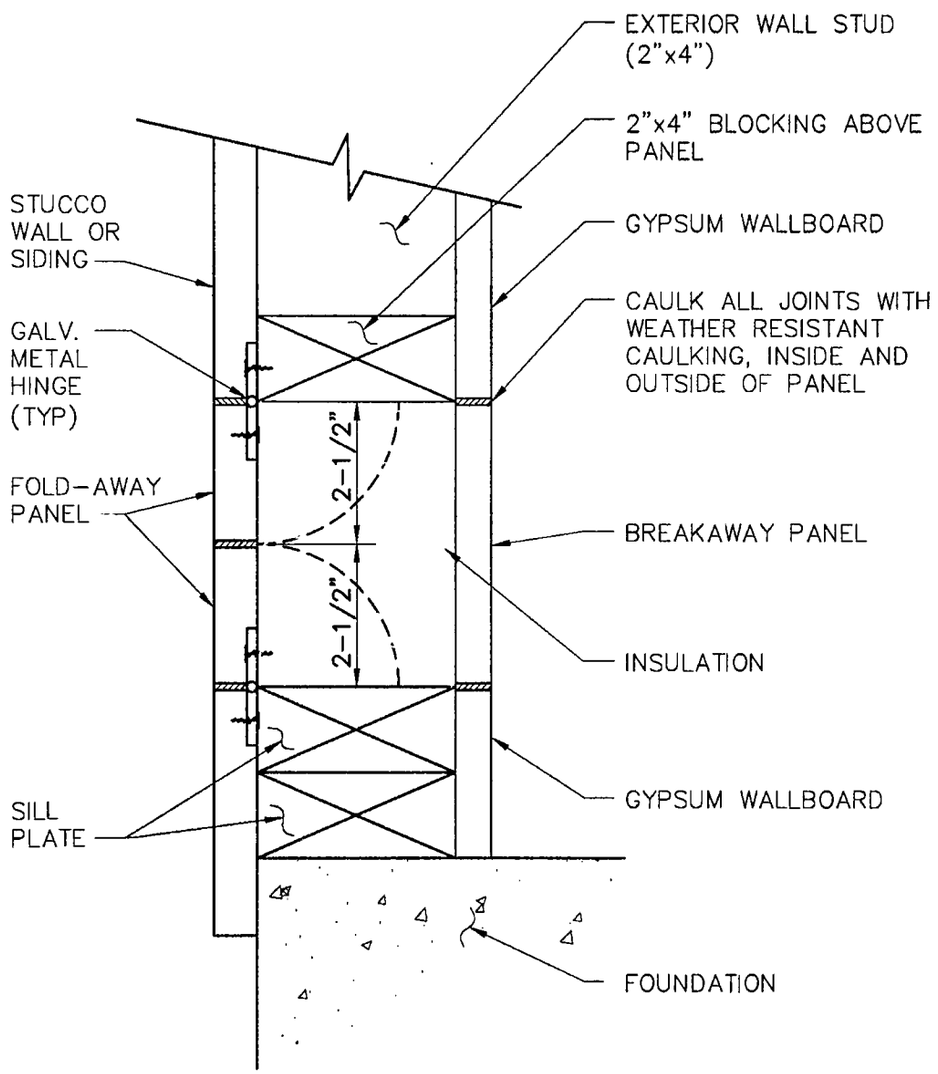

FIGURE K103.1

N.T.S.

CALIFORNIA RESIDENTIAL CODE – MATRIX ADOPTION TABLE
APPENDIX X – EMERGENCY HOUSING

(Matrix Adoption Tables are nonregulatory, intended only as an aid to the code user. See Chapter 1 for state agency authority and building applications.)

Adopting agency	BSC	BSC-CG	SFM	HCD			DSA			OSHPD						BSCC	DPH	AGR	DWR	CEC	CA	SL	SLC
				1	2	1/AC	AC	SS	SS/CC	1	1R	2	3	4	5								
Adopt entire chapter				X																			
Adopt entire chapter as amended (amended sections listed below)																							
Adopt only those sections that are listed below																							
Chapter / Section																							

APPENDIX X

EMERGENCY HOUSING

The provisions contained in this appendix are not mandatory unless specifically referenced in the adopting ordinance.

SECTION AX101
GENERAL

AX101.1 Scope. *This appendix shall be applicable to emergency housing and emergency housing facilities, as defined in Section AX102.*

SECTION AX102
DEFINITIONS

AX102.1 General. *The following words and terms shall, for the purposes of this appendix, have the meanings shown herein. Refer to Chapter 2 of this code for general definitions.*

DECLARATION OF SHELTER CRISIS. *The duly proclaimed existence of a situation in which a significant number of persons are without the ability to obtain shelter, resulting in a threat to their health and safety. (See Government Code Section 8698.)*

DEPENDENT UNIT. *Emergency housing not equipped with a kitchen area, toilet, and sewage disposal system. Recreational vehicles that are not self-contained and without utility service connections shall be considered dependent units.*

EMERGENCY HOUSING. *Housing in a permanent or temporary structure(s), occupied during a declaration of state of emergency, local emergency, or shelter crisis. Emergency housing may include, but is not limited to, buildings and structures constructed in accordance with the California Building Standards Code; and emergency sleeping cabins, emergency transportable housing units, and tents constructed in accordance with this appendix.*

EMERGENCY HOUSING FACILITIES. *On-site common use facilities supporting emergency housing. Emergency housing facilities include, but are not limited to, kitchen areas, toilets, showers and bathrooms with running water. The use of emergency housing facilities is limited exclusively to the occupants of the emergency housing, personnel involved in operating the housing, and other emergency personnel.*

EMERGENCY HOUSING SITE. *A site containing emergency housing and emergency housing facilities supporting the emergency housing.*

EMERGENCY SLEEPING CABIN. *Relocatable hard-sided structure constructed in accordance with this appendix, which may be occupied only for emergency housing if allowed by the enforcing agency.*

EMERGENCY TRANSPORTABLE HOUSING UNIT. *A single- or multiple-section prefabricated structure that is transportable by a vehicle and that can be installed on a permanent or temporary site in response to a need for emergency housing. Emergency transportable housing units include, but are not limited to, manufactured homes, mobilehomes, multifamily manufactured homes, recreational vehicles, and park trailers. For the purposes of this appendix, emergency transportable housing units may also include commercial modulars as defined in the Health and Safety Code Section 18001.8, if approved by the enforcing agency.*

Emergency transportable housing units do not include factory-built housing as defined in the Health and Safety Code Section 19971.

LANDING PLATFORM. *A landing provided as the top step of a stairway accessing a loft.*

LOCAL EMERGENCY. *Local Emergency as defined in the Government Code, Section 8558.*

LOFT. *A floor level located more than 30 inches (762 mm) above the main floor and open to it on at least one side with a ceiling height of less than 6 feet 8 inches (2032 mm), used as a living or sleeping space.*

MANUFACTURED HOME. *A structure designed to be used as a single-family dwelling, as defined in the Health and Safety Code, Section 18007.*

MEMBRANE STRUCTURE. *An air-inflated, air-supported, cable or frame-covered structure, not otherwise defined as a tent. (See Chapter 31 of the California Building Code.)*

MOBILEHOME. *A structure designed to be used as a single-family dwelling, as defined in the Health and Safety Code, Section 18008.*

MULTIFAMILY MANUFACTURED HOME. *A structure designed to contain not less than two dwelling units, as defined in the Health and Safety Code, Section 18008.7.*

PARK TRAILER. *A trailer designed for human habitation that meets all requirements in the Health and Safety Code, Section 18009.3.*

RECREATIONAL VEHICLE. *A motor home, travel trailer, truck camper, or camping trailer, with or without motive power, designed for human habitation, that meets all requirements in the Health and Safety Code, Section 18010.*

STATE OF EMERGENCY. *State of Emergency as defined in the Government Code, Section 8558.*

TENT. *A structure, enclosure or shelter, with or without sidewalls or drops, constructed of fabric or pliable material supported by any manner except by air or the contents that it protects.*

SECTION AX103
EMERGENCY HOUSING

AX103.1 General. *Emergency sleeping cabins, emergency transportable housing units, membrane structures and tents constructed and/or assembled in accordance with this appendix, shall be occupied only during declaration of state of emergency, local emergency, or shelter crisis.*

Buildings and structures constructed in accordance with the California Building Standards Code, used as emergency housing, shall be permitted to be permanently occupied.

AX103.2 Existing buildings. *Existing residential and nonresidential buildings or structures shall be permitted to be used as emergency housing and emergency housing facilities provided such buildings or structures comply with the building code provisions and/or other regulations in effect at the time of original construction and/or alteration. Existing buildings or structures used as emergency housing shall not become or continue to be substandard buildings, as determined by the enforcing agency.*

AX103.2.1 New additions, alterations, and change of occupancy. *New additions, alterations, and change of occupancy to existing buildings shall comply with the requirements of the California Building Standards Code effective at the time of addition, alteration, or change of occupancy. The requirements shall apply only to and/or within the specific area of the addition, alteration, or change of occupancy.*

Exception: *Existing buildings and structures used for emergency housing and emergency housing facilities may not be required to comply with the California Energy Code, as determined by the enforcing agency.*

AX103.3 Occupant load. *Except as otherwise stated in this appendix, the maximum occupant load allowed in buildings and structures used as emergency housing shall be determined by the enforcing agency, but the interior floor area shall not be less than 70 square feet (6.5 m^2) for one occupant. Where more than one person occupies the building/structure, the required floor area shall be increased at the rate of 50 square feet (4.65 m^2) for each occupant in excess of one.*

Exceptions:

1. *Tents.*
2. *Recreational vehicles and park trailers designed for human habitation that meet the requirements in the Health and Safety Code, Sections 18009.3 and 18010, as applicable.*

AX103.4 Fire and life safety requirements not addressed in this appendix. *If not otherwise addressed in this appendix, fire and life safety measures, including, but not limited to, means of egress, fire separation, fire sprinklers, smoke alarms, and carbon monoxide alarms, shall be determined and enforced by the enforcing agency.*

AX103.5 Privacy. *Emergency housing shall be provided with a privacy lock on each entrance door and all windows for use by the occupants.*

AX103.6 Heating. *All sleeping areas shall be provided with adequate heating as determined by the enforcing agency.*

SECTION AX104
EMERGENCY SLEEPING CABINS

AX104.1 General. *Emergency sleeping cabins shall have an interior floor area of not less than 70 square feet (6.5 m^2) for one occupant. Where more than one person occupies the cabin, the required floor area shall be increased at the rate of 50 square feet (4.65 m^2) for each occupant in excess of one. The interior floor area shall not exceed 400 square feet (37 m^2), excluding lofts.*

AX104.2 Live loads. *Emergency sleeping cabins shall be designed to resist intrusion of wind, rain, and to support the following live loads:*

1. *Floor live loads not less than 40 pounds per square foot (1.92 kPa) of floor area.*
2. *Horizontal live loads not less than 15 pounds per square foot (718 Pa) of vertical wall and roof area.*
3. *Roof live loads not less than 20 pounds per square foot (958 Pa) of horizontal roof area.*
4. *In areas where snow loads are greater than 20 pounds per square foot (958 Pa), the roof shall be designed and constructed to resist these additional loads.*

AX104.3 Minimum ceiling height. *Habitable space and hallways in emergency sleeping cabins shall have a ceiling height of not less than 80 inches (2032 mm). Bathrooms, toilet rooms, and kitchens, if provided, shall have a ceiling height of not less than 76 inches (1930 mm). Obstructions*

shall not extend below these minimum ceiling heights including beams, girders, ducts, lighting and other obstructions.

Exception: *Ceiling heights in lofts constructed in accordance with Section AX108 are permitted to be less than 80 inches (2032 mm).*

AX104.4 Means of egress. *Emergency sleeping cabins shall be provided with at least two forms of egress placed remotely from each other. One form of egress may be an egress window complying with Section AX104.4.1. When a loft is provided, one form of egress shall be an egress window complying with Section AX104.4.1, provided in the loft space.*

AX104.4.1 Egress window. *The bottom of the clear opening of the egress window shall not be more than 44 inches (1118 mm) above the floor. The egress window shall have a minimum net clear opening height of 24 inches (610 mm), and a minimum net clear opening width of 20 inches (508 mm). The egress window shall have a minimum net clear opening area of 5 square feet (0.465 m^2).*

AX104.5 Plumbing and gas service. *If an emergency sleeping cabin contains plumbing or gas service, it shall comply with all applicable requirements of the California Plumbing Code and the California Mechanical Code.*

AX104.6 Electrical. *Emergency sleeping cabins shall be provided with all of the following installed in compliance with the California Electrical Code:*

1. *Continuous source of electricity.*

   Exception: *The source of electricity may be an emergency generator or renewable source of power such as solar or wind power.*

2. *At least one interior lighting fixture.*
3. *Electrical heating equipment listed for residential use and a dedicated receptacle outlet for the electrical heating equipment.*

   Exception: *Electrical heating equipment and a dedicated receptacle outlet for the electrical heating equipment are not required if non-electrical source of heating is provided.*

4. *At least one GFCI-protected receptacle outlet for use by the occupant(s).*

AX104.7 Ventilation. *Emergency sleeping cabins shall be provided with means of ventilation (natural and/or mechanical) allowing for adequate air replacement, as determined by the enforcing agency.*

AX104.8 Smoke alarms. *Emergency sleeping cabins shall be provided with at least one smoke alarm installed in accordance with Section R314.*

AX104.9 Carbon monoxide alarms. *If an emergency sleeping cabin contains a fuel-burning appliance(s) or a fireplace(s), a carbon monoxide alarm shall be installed in accordance with Section R315.*

SECTION AX105
EMERGENCY TRANSPORTABLE HOUSING UNITS

AX105.1 General. *In addition to the requirements in this appendix, manufactured homes, mobilehomes, multifamily manufactured homes, commercial modulars, recreational vehicles, and park trailers used as emergency transportable housing shall comply with all applicable requirements in the Health and Safety Code, Division 13, Part 2; and Title 25, Division 1, Chapter 3, Subchapter 2.*

SECTION AX106
TENTS AND MEMBRANE STRUCTURES

AX106.1 General. *Tents shall not be used to house occupants for more than 7 days unless such tents are maintained with tight wooden floors raised at least 4 inches (101.6 mm) above the ground level and are equipped with baseboards on all sides to a height of at least 6 inches (152.4 mm). Tents may be maintained with concrete slabs with the finished surface at least 4 inches (101.6 mm) above grade and equipped with curbs on all sides at least 6 inches (152.4 mm) high.*

A tent shall not be considered a suitable sleeping place when it is found necessary to provide heating facilities in order to maintain a minimum temperature of 50 degrees Fahrenheit (10 degrees Celsius) within such tent during the period of occupancy.

Membrane structures installed and/or assembled in accordance with Chapter 31 of the California Building Code, may be permitted to be used as emergency housing and emergency housing facilities, as determined by the enforcing agency.

SECTION AX107
ACCESSIBILITY

AX107.1 General. *Emergency housing shall comply with the applicable requirements in the California Building Code, Chapter 11B, and/or the US Access Board Final Guidelines for Emergency Transportable Housing.*

Note: *The Architectural and Transportation Barriers Compliance Board (US Access Board) issued the Final Guidelines for Emergency Transportable Housing on May 7, 2014. The final guidelines amended the 2004 ADA Accessibility Guidelines (2004 ADAAG) and the 2004 Architectural Barriers Act (ABA) Accessibility Guidelines (2004 ABAAG) to specifically address emergency transportable housing units provided to disaster survivors by entities subject to the ADA or ABA. The final rule ensures that the emergency transportable housing units are readily accessible to and usable by disaster survivors with disabilities.*

SECTION AX108
LOFTS IN EMERGENCY HOUSING

AX108.1 Minimum loft area and dimensions. *Lofts used as a sleeping or living space shall meet the minimum area and dimension requirements of Sections AX108.1.1 through AX108.1.3.*

AX108.1.1 Minimum area. *Lofts shall have a floor area of not less than 35 square feet (3.25 m^2).*

AX108.1.2 Minimum dimensions. *Lofts shall be not less than 5 feet (1524 mm) in any horizontal dimension.*

AX108.1.3 Height effect on loft area. *Portions of a loft with a sloping ceiling measuring less than 3 feet (914 mm)*

from the finished floor to the finished ceiling shall not be considered as contributing to the minimum required area for the loft.

Exception: *Under gable roofs with a minimum slope of 6:12, portions of a loft with a sloping ceiling measuring less than 16 inches (406 mm) from the finished floor to the finished ceiling shall not be considered as contributing to the minimum required area for the loft.*

AX108.2 Loft access. *The access to and primary egress from lofts shall be any type described in Sections AX108.2.1 through AX108.2.4.*

AX108.2.1 Stairways. *Stairways accessing lofts shall comply with this code or with Sections AX108.2.1.1 through AX108.2.1.6.*

AX108.2.1.1 Width. *Stairways accessing a loft shall not be less than 17 inches (432 mm) in clear width at or above the handrail. The minimum width below the handrail shall be not less than 20 inches (508 mm).*

AX108.2.1.2 Headroom. *The headroom in stairways accessing a loft shall be not less than 74 inches (1880 mm), as measured vertically, from a sloped line connecting the tread or landing platform nosings in the middle of their width.*

AX108.2.1.3 Treads and risers. *Risers for stairs accessing a loft shall be not less than 7 inches (178 mm) and not more than 12 inches (305 mm) in height. Tread depth and riser height shall be calculated in accordance with one of the following formulas:*

1. *The tread depth shall be 20 inches (508 mm) minus 4/3 of the riser height, or*
2. *The riser height shall be 15 inches (381 mm) minus 3/4 of the tread depth.*

AX108.2.1.4 Landing platforms. *The top step of stairways accessing lofts shall be constructed as a landing platform where the loft ceiling height is less than 74 inches (1880 mm). The landing platform shall be 18 inches (457 mm) to 22 inches (559 mm) in depth measured from the nosing of the landing platform to the edge of the loft, and 16 inches (406 mm) to 18 inches (457 mm) in height measured from the landing platform to the loft floor.*

AX108.2.1.5 Handrails. *Handrails shall comply with Section R311.7.8.*

AX108.2.1.6 Stairway guards. *Guards at open sides of stairways shall comply with Section R312.1.*

AX108.2.2 Ladders. *Ladders accessing lofts shall comply with Sections AX108.2.1 and AX108.2.2.*

AX108.2.2.1 Size and capacity. *Ladders accessing lofts shall have a rung width of not less than 12 inches (305 mm), and 10-inch (254 mm) to 14-inch (356 mm) spacing between rungs. Ladders shall be capable of supporting a 200 pound (90.7 kg) load on any rung. Rung spacing shall be uniform within $^3/_8$ inch (9.5 mm).*

AX108.2.2.2 Incline. *Ladders shall be installed at 70 to 80 degrees from horizontal.*

AX108.2.3 Alternating tread devices. *Alternating tread devices are acceptable as allowed by the enforcing agency.*

AX108.2.4 Loft guards. *Loft guards shall be located along the open side of lofts. Loft guards shall not be less than 36 inches (914 mm) in height or one-half of the clear height to the ceiling, whichever is less. Loft guards shall not have openings from the walking surface to the required guard height that allow passage of a sphere 4 inches (102 mm) in diameter.*

SECTION AX109
LOCATION, MAINTENANCE AND IDENTIFICATION

AX109.1 Maintenance. *Emergency housing and emergency housing facilities shall be maintained in a safe and sanitary condition, and free from vermin, vectors and other matter of an infectious or contagious nature. The grounds within emergency housing sites shall be kept clean and free from accumulation of debris, filth, garbage and deleterious matter. Emergency housing and emergency housing facilities shall not be occupied if a substandard condition exists, as determined by the enforcing agency.*

AX109.1.1 Fire hazards. *Dangerous materials or materials that create a fire hazard, as determined by the enforcing agency, shall not be allowed on the grounds within emergency housing sites.*

AX109.2 Identification. *Emergency housing shall be designated by address numbers, letters, or other suitable means of identification. The identification shall be in a conspicuous location facing the street or driveway fronting the building or structure. Each identification character shall be not less than 4 inches (102 mm) in height and not less than 0.5 inch (12.7 mm) in width, installed/painted on a contrasting background.*

SECTION AX110
EMERGENCY HOUSING FACILITIES

AX110.1 Drinking water. *Potable drinking water shall be provided for all occupants of emergency housing.*

AX110.2 Kitchens. *Where occupants of dependent units are permitted or required to cook for themselves, a separate area shall be equipped and maintained as a common use kitchen. Refrigerated storage shall be provided for safe storage of food.*

AX110.3 Toilet and bathing facilities. *When dependent units are used as emergency housing, the emergency housing site shall be provided with one toilet and one bathing facility for every 15 occupants of each gender. The enforcing agency may permit different types and ratios of toilet and bathing facilities. The approval shall be based upon a finding that the type and ratio of toilet and bathing facilities are sufficient to process the anticipated volume of sewage and waste water, while maintaining sanitary conditions for the occupants of the emergency housing.*

Bathing facilities shall be provided with heating equipment which shall be capable of maintaining a temperature of 70 degrees F (21.0 degrees Celsius) within such facilities.

Lavatories with running water shall be installed and maintained in the toilet facilities or adjacent to the toilet facilities.

AX110.4 Garbage, waste and rubbish disposal. *All garbage, kitchen waste and rubbish shall be deposited in approved covered receptacles, which shall be emptied when filled and the contents shall be disposed of in a sanitary manner acceptable to the enforcing agency.*

INDEX

A

ACCESS (TO)
Definition R202
To attic R807
To crawl space R408.4
ACCESSIBILITY R320
ACCESSORY STRUCTURE
Definition R202
ADDRESS (SITE) R319
ADMINISTRATON, CALIFORNIA Chapter 1, Division 1
General *1.1*
Dept. of Housing and Community Development . . *1.8*
Office of the State Fire Marshal *1.11*
ADMINISTRATION, DIVISION II . . . . . Chapter 1
Applicability R102
Authority R104
Board of appeals R112
Certificate of occupancy R110
Construction documents R106
Department of building safety R103
Entry R104.6
Fees R106
General R101
Inspections R109
Permits R105
Purpose R101.3
Service utilities R111
Stop work order R114
Temporary structures and uses R107
Violations R113
ALLOWABLE SPANS
Of floor joists R502.3, R505.3.2
Of headers R602.7, R603.6, R610.10
Of rafters and ceiling joists R802.4, R802.5, R804.3.1, R804.3.2
***ALTERNATE* MATERIALS (see MATERIALS)** R104.11
ANCHOR BOLTS R403.1.6
APPEAL
Board of 1.8.8, R112.1
Right of 1.8.8, R112
APPLIANCE
Flue area R1003.14
APPLICATION
Plywood R703.3
APPROVED
Agent (definition) R202
Definition R202
Source (definition) R202
AREA
Flue (appliances) R1003.14
Flue masonry R1003.15
Room, minimum R304
ASPHALT SHINGLES R905.2
ATTIC
Access R807
AUTOMATIC FIRE SPRINKLER SYSTEMS . . . R313

B

BATH, TOILET AND SHOWER SPACES R307
BATHROOM
Exhaust fan *R303.3.1*
BATTERY SYSTEM, STATIONARY STORAGE R327
Definition R202
BEAM SUPPORTS R606.14
BEARING
Of joists R502.6
BORED HOLES (see NOTCHING)
BUILDING
Definition R202
Existing, definition R202
BUILDING OFFICIAL
Definition R202
BUILDING PLANNING
Accessibility R320
Automatic fire sprinkler systems R313
Carbon monoxide alarms R315
Ceiling height R305
Design criteria R301
Elevators and platform lifts R321
Emergency escape R310
Exterior wall R302.1
Fire-resistant construction R302
Flood-resistant construction R322
Foam plastic R316

Garages and carports R309
Glazing. R308
Guardrails *or Guards* R312
Handrails R311.7.8, R311.8.3
Insulation R302.10
Landing R311.3, R311.3.1, R311.3.2, R311.5.1
Light, ventilation and heating R303
Means of egress R311
Mezzanines R325
Minimum room area. R304
Planning. . . . . Chapter 3
Plumbing fixture clearances. R307
Protection of wood against decay R317
Radon protection . . . . . Appendix F
Ramps R311.8
Sanitation. R306
Site address. R319
Smoke alarms R314
Solar energy systems R324
Stairways R311.7
Stationary storage battery systems R327
Storm shelters R323
Termite protection R318
Toilet, bath and shower spaces. R307

BUILDING-INTEGRATED PHOTOVOLTAIC ROOF PANEL
As roof covering. R324.5.2
Definition R202

BUILT-UP GIRDERS (see GIRDERS)

BUILT-UP ROOFING (see ROOFING)

C

CARBON MONOXIDE ALARMS R315
Definition R202

CARPORTS R309.2

CEILING
Finishes R302.9, R805
Height R305

CERTIFICATE OF OCCUPANCY R110

CHASES R606.8

CHANGE OF OCCUPANCY
Definition R202

CHIMNEYS
And fireplaces . . . . . Chapter 10
Caps R1003.9.1
Clearance R1003.18
Corbeling R1003.5
Crickets R1003.20
Design (masonry). R1003.1
Factory-built R1005
Fireblocking R1003.19
Flue area R1003.14, R1003.15
Flue lining. R1003.11
Load R1003.8
Multiple flues *R1003.13*
Rain caps *R1003.9.3*
Spark arrestors. R1003.9.2
Termination R1003.9
Wall thickness R1003.10

CLAY
Tiles R905.3

CLEANOUT
Masonry chimney. R1003.17

CLEARANCE
For chimneys R1003.18

COLUMNS R407

COMBUSTIBLE *MATERIAL*
Definition R202

CONCRETE
Capillary break *R506.2.3.1*
Compressive Strength R402.2
Floors (on ground) R506
Tile (roof) R905.3
Weathering. . . . . Figure R301.2(4), R402.2

CONDITIONED FLOOR AREA R202

CONDITIONED SPACE R202

CONSTRUCTION
Cavity wall masonry R608
Flood-resistant R322
Floors . . . . . Chapter 5
Footings R403
Foundation material R402
Foundation walls R404
Foundations . . . . . Chapter 4
Masonry R606, R607, R608, R610
Pollutant control *R340*
Roofs . . . . . Chapter 8
Steel framing R505, R603, R804
Waste. *R334.1*
Wood framing. R502, R602, R802
Walls . . . . . Chapter 6

CONSTRUCTION DOCUMENTS R106

CONTINUOUS AIR BARRIER R202

COURT
Definition R202

COVERING
Exterior R703
Interior R702
Roof . . . . . Chapter 9
Wall . . . . . Chapter 7
CRAWL SPACE R408

D

DAMPROOFING R406
DECAY
Protection against R317
DECK
Supported by exterior wall R507
Wood/plastic composite boards R507.2.2
DEFINITIONS
Building R202
DESIGN CRITERIA R301
Alternative provisions R301.1.1
Application R301.1
Climatic and geographic R301.2
Dead load R301.4
Deflection R301.6
Engineered design R301.1.3
Live load R301.5
Nominal sizes R301.8
Roof load R301.6
Seismic R301.2.2
Snow loads R301.2.3
Story height R301.3
Sunrooms R301.2.1.1.1
Wind R301.2.1
DOORS
Egress R311.2
Exterior R311.3, R609
DRAFTSTOPPING R302.12, R502.12
DRAINAGE
Foundation R405
Site drainage *R300*
DRILLING AND NOTCHING (see NOTCHING)
DUCTS . . . . . Chapter 16
Defined R202
Dwelling-garage wall and ceiling penetration R302.5.2
System, definition R202
DWELLING
Definition R202
DWELLING UNIT
Definition R202
Separation R302.2, R302.3

E

EJECTORS (see SUMPS AND EJECTORS)
ELEVATORS AND PLATFORM LIFTS R321
EMERGENCY ESCAPE AND RESCUE OPENINGS R310
Area wells R310.3.2
At additions R310.5
At existing basements R310.6
Bars, grilles, covers and screens R310.4
Definition R202
Dimensions R310.2
Doors R310.3
Replacement window sill height R310.2.5
Under decks and porches R310.2.4
Where required R310.1
ENTRY *1.8.5*, R104.6
EXTERIOR
Covering R703
Insulation *and* finish systems R703.9
Lath R703.7.1
Plaster R703.7
EXTERIOR WALL
Construction R302.1
Defined R202
Fire-resistance rating R302.1

F

FACTORY BUILT
Chimneys R1005
Fireplace stoves R1005.3
Fireplaces R1004
FASTENING . . . . . Table R602.3(1)
FEES, PERMIT R108
FINISHES
Flame spread and smoke density R302.9
For ceilings R805
Interior R302.9, R702
FIRE SPRINKLER SYSTEM R313
FIREBLOCKING
Barrier between stories R302.11, R602.8
Chimney R1003.19
Fireplace R1001.12
FIREPLACES . . . . . Chapter 10
Clearance R1001.11
Corbeling *R1001.8.1*
Factory-built R1004

Fireblocking R1001.12
Walls R1001.5
FIRE-RESISTANT CONSTRUCTION R302
Draftstopping R302.1
Dwelling-garage fire separation R302.6
Dwelling-garage opening and penetration R302.5
Exterior walls R302.1
Fireblocking R302.11
Floors R302.13
Foam plastics R302.8
Insulation R302.10, R302.14
Penetrations R302.4
Townhouse separation R302.2
Two-family dwellings R302.3
Under-stair protection R302.7
Wall and ceiling finishes R302.9
FIRE-SEPARATION DISTANCE
Definition R202
Exterior walls and wall projections R302.1
Ground-mounted photovoltaic systems R302.7.1
> **FLAME SPREAD INDEX** R302.9, R302.10
FLASHING R703.8.5, R703.4, R903.2, R905
> **FLOOD-RESISTANT CONSTRUCTION**
General and structural R301.2.4, R322
> **FLOORS**
> Bathtub and shower R307.2
Concrete (on ground) R506
> Loads R301, R501.2
> Steel framing R505
Treated-wood (on ground) R504
Wood framing R502
FLUE
Area R1003.14, R1003.15
Lining R1003.11, R1003.12
Multiple R1003.13
FOAM PLASTICS R316
> **FOOTINGS** R403
> Requirements R403
> **FOUNDATIONS** . . . . . Chapter 4
Cripple walls R602.9, R602.10.9, R602.11.2
Frost protection R403.1.4.1
Inspection R109.1.1
> Walls R404
FRAME
Inspection R109.1.4
>

G

GARAGES AND CARPORTS R309
Electric vehicle charging infrastructure . . . . . *R309.8* | | <
GIRDERS . . . . . R502.5 <
GLAZING
Aggregate area R303.1
Greenhouses, glass in R308.6.6
Protection of openings R301.2.1.2
Required glazed openings R303.9
Safety glazing and hazardous locations. R308
Site-built R308.5
Skylights and sloped R202, R308.6
GRADE
Definition R202
Of lumber R502.1.1, R602.1.1, R802.1.1
Plane, definition . . . . . R202 <
GROUND <
Floors (on ground) . . . . . R504, R506 <
GUARDS *OR GUARDRAIL* . . . . . R312 | |
Definition R202
GYPSUM
Wallboard R702.3

H

HABITABLE SPACE
Definition R202
HALLWAYS R311.6
HANDRAILS R311.7.8, R311.8.3
Definition R202
HAND SHOWER (see SHOWER)
HEADERS
SIP R610.8
Steel R603.6
Wood R602.7
HEARTH R1001.9
Extension R1001.9, R1001.10
HEATED SLAB
Defined . . . . . R202 <
HEATING <
Required . . . . . R303.10 <
HEIGHT
Ceiling R305
HIGH-EFFICACY LAMPS
Defined R202

HISTORIC BUILDING
Definition R202
HOLLOW-UNIT MASONRY
(see MASONRY) R606.3.2.2, R606.13.1.2

I

INDIRECTLY CONDITIONED SPACE
(see CONDITIONED SPACE)
INLET
To masonry chimneys R1003.16
INSPECTION
On-site *1.8.4,* R109.1
INSULATING SHEATHING
Defined R202
INSULATION
Above-deck R906
Air-impermable R202
Flame spread R302.10
Foam plastic R316
INTERIOR
Lath R702.2.3
Other finishes R702.5
Plaster R702.2
Wall covering . . . . . Chapter 7

J

JOIST
Bearing R502.6, R606.6.3.1

K

KITCHEN
Definition R202

L

LABELED
Definition R202
LABELING
Definition R202
LANDINGS R311.3, R311.3.1, R311.3.2, R311.7.6, R311.8.2
LATERAL SUPPORT R502.7, R606.6.4, R607.5.2
LATH
Exterior R703.7.1
Interior R702.2.3
LAVATORIES
Clearances R307
LIGHT, VENTILATION AND HEATING R303
LIGHTING
Adjoining rooms R303.2
Bathrooms R303.3
Exterior stairs R303.8
Habitable rooms R303.1
Interior stairs R303.7
Required glazed openings R303.9
LIMITED-DENSITY OWNER-BUILT RURAL DWELLINGS
Alternative provisions *R301.1.1.1*
Definition *R202*
LINING
Flue R1003.11, R1003.12
LINTEL R606.10, R608.8, R703.8.3, R1001.7
LISTED AND LISTING
Definition applied to building and mechanical provisions R202
LOAD
Additional R1003.8
Dead load R301.4
Definition, dead and live R202
Live load R301.5
Roof R301.6
Seismic risk map . . . . . Figure R301.2(2)
Snow load map . . . . . Figure R301.2(5)
Wind speed map . . . . . Figure R301.2(5)A
LUMBER
Grade R502.1.1, R602.1.1, R802.1.1

M

MASONRY
Anchorage R606.11
Cavity wall R606.13
Chases R606.8
General R606
Hollow unit R202, R606.3.2.2, R606.13.1.2
Inspection R109.1.4
Seismic requirements R606.12
Solid, definition R202
Veneer R703.8
Veneer attachment R703.3
MATERIALS
Alternate *1.8.7,* R104.11
Combustible R202, R1001.11, R1001.12, R1003.18, R1003.19
For flue liners R1003.11
For hearth extension R1001.9

For siding R703.5
MEANS OF EGRESS R311
Attachment of landings, decks, balconies and stairs R311.5
Door R311.2
Floors and landings at exterior doors R311.3
Hallways R311.6
Ramps R311.8
Stairways R311.7
Vertical egress R311.4
MECHANICAL
Inspection R109.1.2
MEMBRANE
Penetration R302.4.2
Polyethylene R504.2.2, R506.2.3
Waterproofing R406.2
Water-resistive R703.2
METAL
Ducts . . . . . Chapter 16
Roof panels R905.10
Roof shingles R905.4
MEZZANINES R325
MODIFICATIONS R104.10
MOISTURE CONTENT, BUILDING MATERIALS *R109.1.4.1*
MOISTURE CONTROL R702.7
MORTAR
Joints R606.3.1
MULTIPLE
Flues R1003.13

N

NONCOMBUSTIBLE MATERIAL
Definition R202
NOTCHING
Steel joists R505.2.5, R505.3.5, R804.2.5, R804.3.3
Steel studs R603.2.6, R603.3.4
Wood joists R502.8, R802.7.1
Wood studs R602.6
Wood top plates R602.6.1

O

OCCUPIED SPACE
Definition R202
OPENING
Protection R302.5

P

PARAPETS R302.2.2, R606.4.4
PARTICLEBOARD
Floor R503.3
Walls R605
PENETRATIONS R302.4, R302.5
PERMITS *1.8.4,* R105
PHOTOVOLTAIC PANEL SYSYTEMS R907
PIERS R606.7
Masonry R404.1.9
PLANNING
Building . . . . . Chapter 3
PLANS R106
PLASTER
Exterior R703.7
Interior R702.2
PLATFORM LIFTS AND ELEVATORS R321
PLENUM
Definition R202
PLUMBING
Fixture clearances R307
Inspection R109.1.2
PLYWOOD
Application R703.5
Materials, walls R604
PRECAST CONCRETE
Footings R403.4
Foundation material R402.3.1
Foundation walls R404.5
PRIVATE
Sewage disposal system . . . . . Appendix I
PROTECTION
Against decay and termites R317, R318
Against radon . . . . . Appendix F
PURLINS R802.4.5
PURPOSE *R1.1.2,* R101.3

R

RAFTERS
Grade of lumber R802.1
Spans . . . . . R802.1.1, Tables R802.4.1(1) – R802.4.1(8)
RAMPS R311.8
REPAIR
Defined R202
RESISTANT SIDING MATERIAL (see MATERIALS)
RIDGE BOARD R802.4

RODENTPROOFING *R602.3.4.1*
ROOF
Coverings R905
Drainage R903.4
Fire classification R902
Flashing R703.4, R903.2, R905
Materials R904
Reroofing R908
Rooftop-mounted solar energy systems R324.3, R324.6
Steel framing R804
Wood framing R802
ROOF ASSEMBLY
Defined R202
ROOF-CEILING CONSTRUCTION (see CONSTRUCTION) . . . . . Chapter 8
Wind uplift R802.11, R804.3.8
ROOFING
Built-up R905.9
Liquid-applied coating R905.15
Modified bitumen R905.11
Sprayed polyurethane foam R905.14
Thermoplastic single-ply R905.13
Thermoset single-ply R905.12
ROOM
Area, height and dimensions R304, R305
Minimum sizes R304

S

SANITATION R306
SEISMIC RISK MAP . . . . . Figure R301.2(2), Figure R301.2(3)
SHAKES
Wood R702.6, R703.6, R905.8
SHINGLE
Asphalt shingles R905.2
Metal R905.4
Slate R905.6
Wood R905.7
SHOWER
Compartment R307.2
Finishes R307.2
Space required R307.1
SIDING
Exterior coverings R703
SITE
Address R319
Preparation R408.5, R504.2, R506.2
SIZE
Of rooms R304
SKYLIGHTS R308.6
SLATE SHINGLES R905.6
SMOKE ALARMS R314
SMOKE-DEVELOPED INDEX R302.9, R302.10
SNOW LOAD MAP . . . . . Figure R301.2(5)
SOILS
Collapsible (definition) R202
Compressible (definition) R202
Expansive (definition) R202
SOLAR ENERGY SYSTEMS R324
Building-integrated photovoltaic systems R324.5
Definition R202
Ground-mounted photovoltaic systems R324.7
Photovoltaic systems R324.3
Roof access and pathways R324.6
Rooftop-mounted photovoltaic systems R324.3
SPANS
Steel (allowable) R505.3.2, R804.3.2.1
Wood (allowable) R502.3, R802.5
SPRINKLER (see FIRE SPRINKLER SYSTEMS)
STAIRWAYS R311.7
Alternating tread devices R311.7.11
Bulkhead enclosure R311.7.10.2
Handrails R311.7.8
Headroom R311.7.2
Illumination R311.7.9
Landings for R311.7.6
Nosings R311.7.5.3
Ships ladders R311.7.12
Spiral R311.7.10
Treads and risers R311.7.5, R311.7.5.4
Vertical rise R311.7.3
Walking surface slope R311.7.7
Walkline R311.7.4
Width R311.7.1
Winder treads R311.7.5.2.1
STATIONARY STORAGE BATTERY SYSTEMS R327
Definition R202
STEEL
Fireplace units R1001.5.1
Floor construction R505
Roof-ceiling construction R804
Walls R603
STOP WORK ORDER R114
STORM SHELTERS R323

STORY
Definition R202
STRUCTURAL INSULATED PANEL (SIP) R610
STUDS
Spacing R602.3.1
Steel. R603.2, R603.3
Wood R602.2, R602.3
SUNROOMS. R301.2.1.1.1, R303.9.1
Defined R202
SUPPORT
Of decks. R507.9.1.2
Of floor joists R502.6, R505.3.2
Of masonry chimneys R1003.2, R1003.3, R1003.4

T

TEMPERATURE ISOLINES. . . . . Figure R301.2(1)
TEMPORARY STRUCTURES R107
TERMINATION
Of chimneys. R1003.9
TERMITES
Infestation probability map. . . . . Figure R301.2(6)
Protection. R318
THERMAL RESISTANCE (see *R*-VALUE)
THERMAL TRANSMITANCE (see *U*-FACTOR)
THICKNESS
Of chimney walls R1003.10
TIES
Veneer R703.8.4
TILE
Shingles (clay and concrete) R905.3
TOILET, BATH AND SHOWER SPACES R307
TOWNHOUSE
Definition R202
Parapet construction R302.2.5
Scope. R101.2
Separation R302.2
Structural independance R302.2.6
TRUSSES
Steel. R505.1.3, R804.3.6
Wood R502.11, R802.10
TWO-FAMILY DWELLINGS. R302.3

U

UNDER FLOOR
Space. R408
UNDER-STAIR PROTECTION. R302.7
UNVENTED ATTIC ASSEMBLIES. R806.5

V

VAPOR RETARDERS R702.7
Capillary break. *R506.2.3.1*
Definition R202
VENEER
Masonry R703.7
VENTILATION
Adjoining rooms R303.2
Bathroom and kitchen. R303.3
Habitable rooms. R303.1
Roof R806
Under floor R408.1
VENTING (MECHANICAL)
Chimney and vent connectors R1006
Fireplace R1006
VIOLATIONS
And penalties R113

W

WALLBOARD
Gypsum R702.3
WALLS
Above-grade, defined. R202
Basement, defined R202
Bathtub compartments. R307.2
Bracing, steel R603.9
Bracing, wood R602.10
Construction. . . . . Chapter 6
Covering. . . . . Chapter 7
Crawl space, defined R202
Cripple R602.9
Deflection R301.7
Exterior, defined. R202
Exterior covering R703
Finishes R307.2, R702
Fireplace R1001.5
Foundation R404
Insulating concrete form. R608.3, R608.4, R608.5.3
Steel framing R603
Structural insulated panels (SIP) R610
Thickness, masonry chimneys. R1003.10
Wood framing. R602
WASTE
Construction waste. *R334*

WATER CLOSET
Clearances for R307.1
WATERPROOFING
And dampproofing R406
WIND
Design criteria. R301.2
Speed maps . . . . . .Figure R301.2(5)A, Figure R301.2(5)B
WINDOW R609
EERO replacement sill height. R310.2.5
Fall protection R312.2
Opening limiting devices. R312.2.2
WOOD
Floor construction R502
Foundation walls. R404.2
Protection against decay R317
Roof-ceiling construction R802
Shakes R905.8
Shingles R905.7
Trusses. R502.11, R802.10
Walls. R602

Y

YARD
Definition. R202

HISTORY NOTE APPENDIX

2019 California Residential Code
Title 24, Part 2.5, California Code of Regulations (CCR)

HISTORY:

For prior code history, see the History Note Appendix to the *California Residential Code, 2016* Triennial Edition, effective January 1, 2017.

1. (HCD 04/18, SFM 02/18) -- Adopt the 2018 edition of the *International Residential Code*, published by the International Code Council, for incorporation into the 2019 *California Residential Code*, CCR Title 24, Part 2.5 with amendments for state-regulated occupancies, effective on January 1, 2020.

ICC INTERNATIONAL CODE COUNCIL®

People Helping People Build a Safer World®

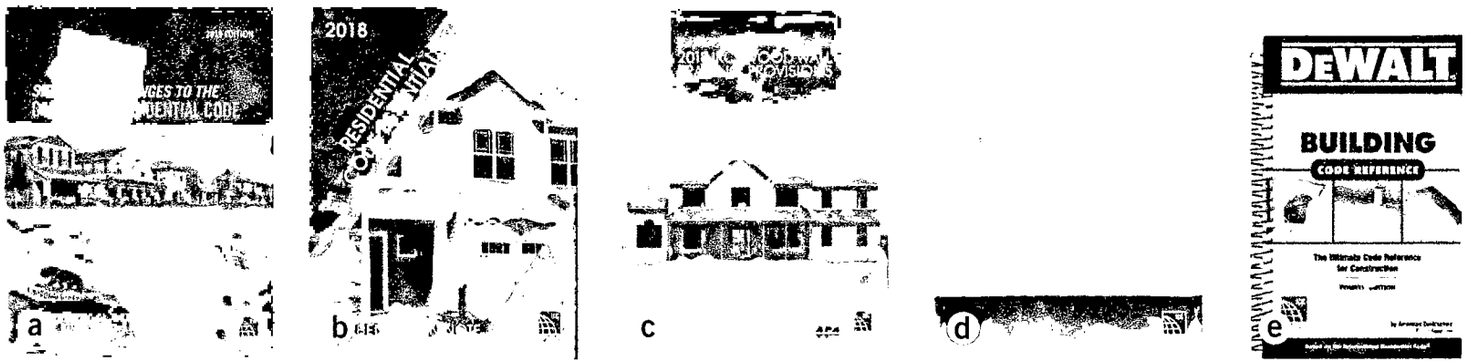

Helpful tools for Your California Residential Code

a. Significant Changes to the California Residential Code, 2019 Edition

This must-have guide provides comprehensive, yet practical, analysis of the critical changes made between the 2016 and 2019 editions of the CRC. Key changes are identified then followed by in-depth discussion of how the change affects real-world application.

Features:

- A quick summary, detailed illustration, and discussion accompanies each change
- Key insights into the CRC's content, meaning and implications

SOFT COVER #5526S19
PDF DOWNLOAD #8950P865

b. Residential Code Essentials: Based on the 2018 IRC

Explores those code provisions essential to understanding the application of the IRC in a straightforward and easy-to-read format. The user-friendly approach of the text simplifies critical concepts so that users can achieve a more complete understanding of the code's intent. Full-color illustrations, examples and simplified tables assist the reader in visualizing the code requirements. This up-to-date, step-by-step guide's topic organization reflects the intent of the IRC and facilitates understanding and application of the code provisions.

SOFT COVER #4131S18
PDF DOWNLOAD #8951P013

Turbo Tabs for 2019 California Residential Code

Flip right to the most commonly used sections of the code! Full-page inserts feature key sections of the code printed on the tabs in an easy-to-read format.

#0101TL19CA

FROM APA & ICC!

c. A Guide to the 2018 IRC Wood Wall Bracing Provisions

Although it is of critical importance when designing, performing plan review, building or inspecting a structure, wall bracing is a common source of confusion and misapplication. This illustrative guide was developed to help building designers, builders, building officials and others using the code in the application of the lateral bracing requirements of the 2018 IRC.

SOFT COVER #7102S18
PDF DOWNLOAD #8799P18

d. 2018 IRC® Code and Commentary, Volume 1 (Chapters 1–11)

This helpful tool contains the full text of 2018 IRC, including tables and figures, followed by corresponding commentary at the end of each section to help code users understand the intent of the code provisions and learn how to apply them effectively.

SOFT COVER #3110S181
PDF DOWNLOAD #871P181
SOFT + PDF COMBO #3110SP181

e. DeWALT Building Code Reference, Fourth Edition

A simple, easy-to-understand approach to the 2018 IRC that provides illustrations and clear, concise text. Coverage ranges from wall, floor, and roof framing to foundations and footings, containing all the information you need to be successful in the industry in a compact, easy-to-use reference guide. Packaged in a conveniently sized, durable format, it will withstand a variety of on-the-job trainings and ultimately the wear and tear of jobsites

SOFT COVER #9511S18

Order Your Residential Code Tools Today! 1-800-786-4452 | www.iccsafe.org/books

The ICC Assessment Center (formerly known as ICC Certification & Testing) provides nationally recognized credentials that demonstrate a confirmed commitment to protect public health, safety, and welfare. Raise the professionalism of your department and further your career by pursuing an ICC Certification.

ICC Certifications offer:

- Nationwide recognition
- Increased earning potential
- Career advancement
- Superior knowledge
- Validation of your expertise
- Personal and professional satisfaction

Exams are developed and maintained to the highest standards, which includes continuous peer review by national committees of experienced, practicing professionals. ICC is continually evolving exam offerings, testing options, and technology to ensure that all building and fire safety officials have access to the tools and resources needed to advance in today's fast-paced and rapidly-changing world.

Enhancing Exam Options

Effective July 2018, the Assessment Center enhanced and streamlined exam options and now offers only computer based testing (CBT) at a test site and PRONTO. We no longer offer paper/pencil exams.

Proctored Remote Online Testing Option (PRONTO)

Taking your next ICC certification exam is more convenient, more comfortable and more efficient than ever before with PRONTO.

pronto
ICC ONLINE EXAMS

PRONTO provides a convenient testing experience that is accessible 24 hours a day, 7 days a week, 365 days a year. Required hardware/software is minimal – you will need a webcam and microphone, as well as a reasonably recent operating system.

Whether testing in your office or in the comfort of your home, your ICC exam will continue to maintain its credibility while offering more convenience, allowing you to focus on achieving your professional goals. The Assessment Center continues to add exams to the PRONTO exam catalog regularly.

18-15617

Checkout all the ICC Assessment Center has to offer at iccsafe.org/certification