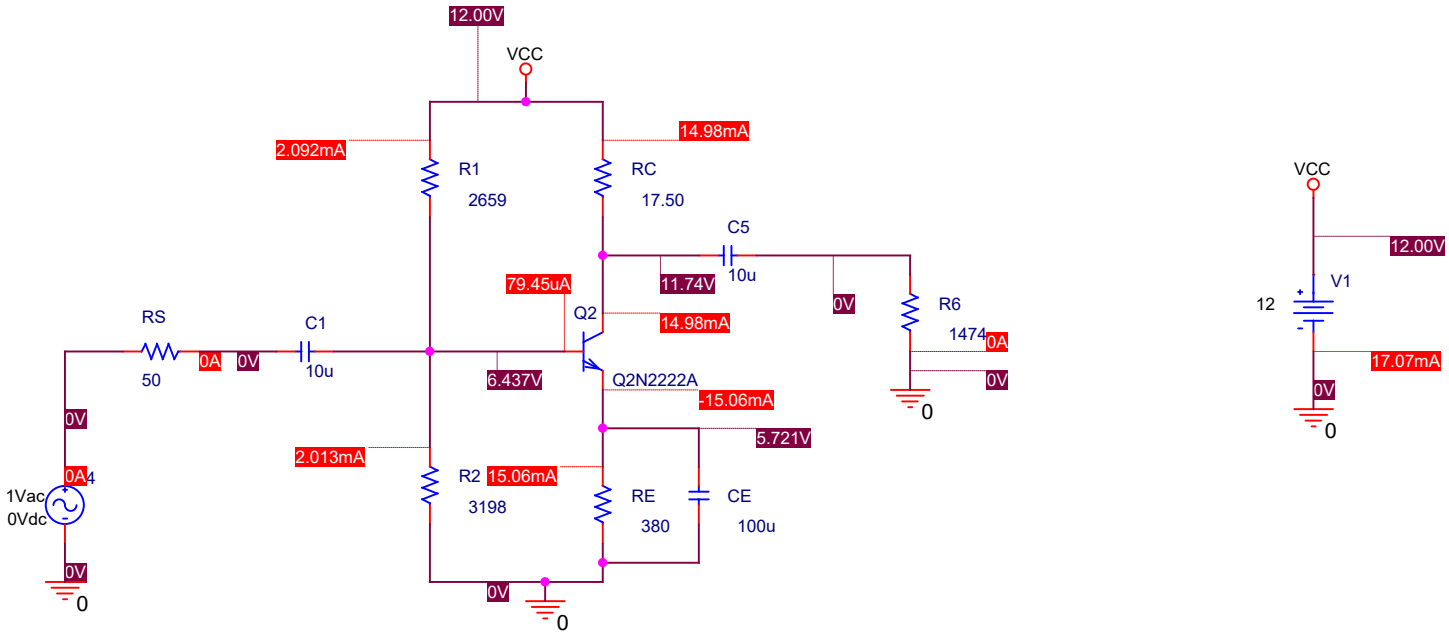

Title	<Title>	
Size A4	Document Number <Doc>	Rev <Rev
Date: Sunday, December 06, 2020	Sheet 1 of 1	

D

C

B

A

RevCode>

Date: Sunday, December 06, 2020 Sheet 1 of 1

5 4 3 2 1