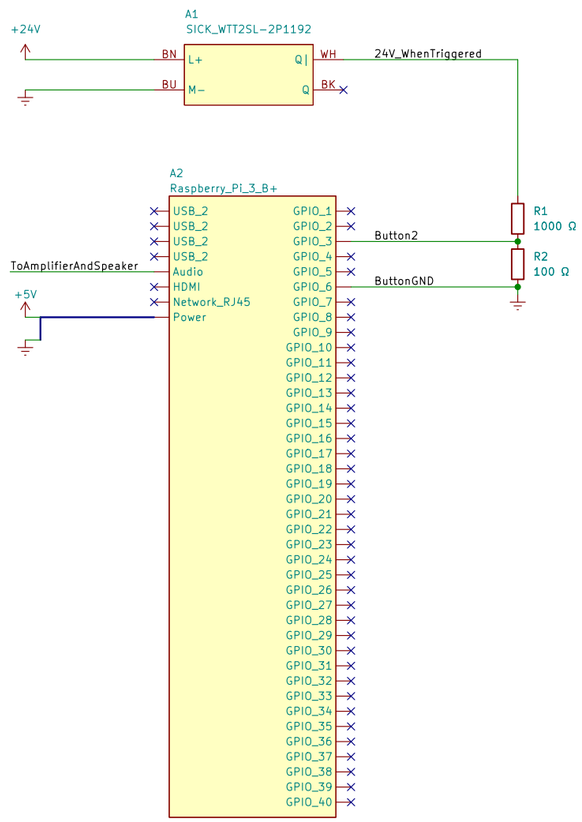


| | | | | | | | |
|---|---|---|---|---|---|---|---|
| SHEET: 1/1 | KiCad E.D.A. kicad (6.0.7-1)-1 | PAPER: B | DESIGNER: RHYS FAULTLESS | DATE: 2023-07-30 | FILE: raspberry_pi_triggered_audio.kicad_sch | ITEM NAME: RASPBERRY PI AUDIO TRIGGER | Rev: 1 |