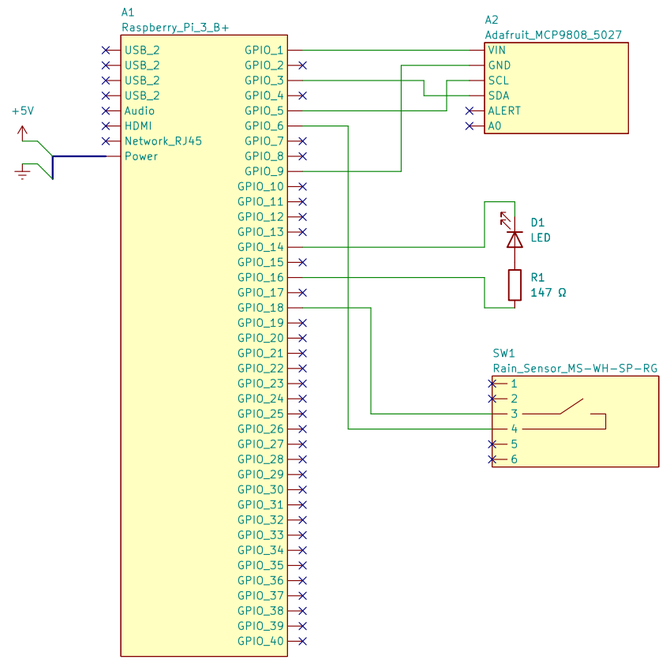

SHEET: 1/1	KiCad E.D.A. kicad (6.0.7-1)-1	PAPER: B	DESIGNER: RHYS FAULTLESS	DATE: 2022-09-10	FILE: weather-station.kicad_sch	ITEM NAME: WEATHER STATION ASSEMBLY	Rev: 1