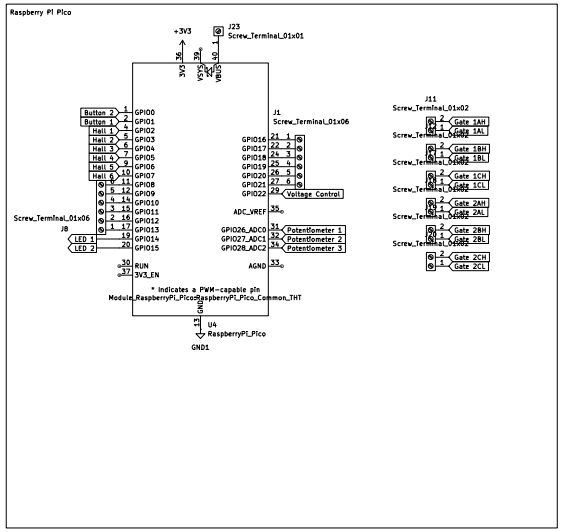
Raspberry Pi Pico
J23
Screw_Terminal_01x01
J1
Screw_Terminal_01x06
J8
Screw_Terminal_01x06
J11
Screw_Terminal_01x02
Voltage Control
Potentiometer 1
Potentiometer 2
Potentiometer 3
LED 1
LED 2
Gate 1AH
Gate 1AL
Gate 1BH
Gate 1BL
Gate 1CH
Gate 1CL
Gate 2AH
Gate 2AL
Gate 2BH
Gate 2BL
Gate 2CH
Gate 2CL
* Indicates a PWM-capable pin
Module_RaspberryPi_Pico
RaspberryPi_Pico_Common_THT
U4
RaspberryPi_Pico

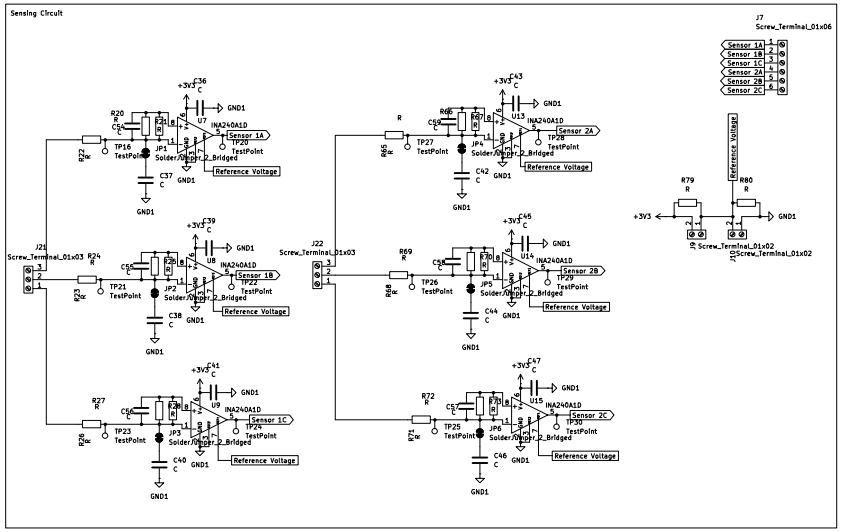
Sensing Circuit
J7
Screw_Terminal_01x06
Sensor 1A
Sensor 1B
Sensor 1C
Sensor 2A
Sensor 2B
Sensor 2C
INA240A1D
Reference Voltage
J21
Screw_Terminal_01x03
J22
Screw_Terminal_01x03
Screw_Terminal_01x02

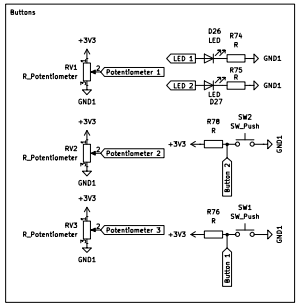
Buttons
R_Potentiometer
Potentiometer 1
Potentiometer 2
Potentiometer 3
LED 1
LED 2
SW_Push
Button 1
Button 2

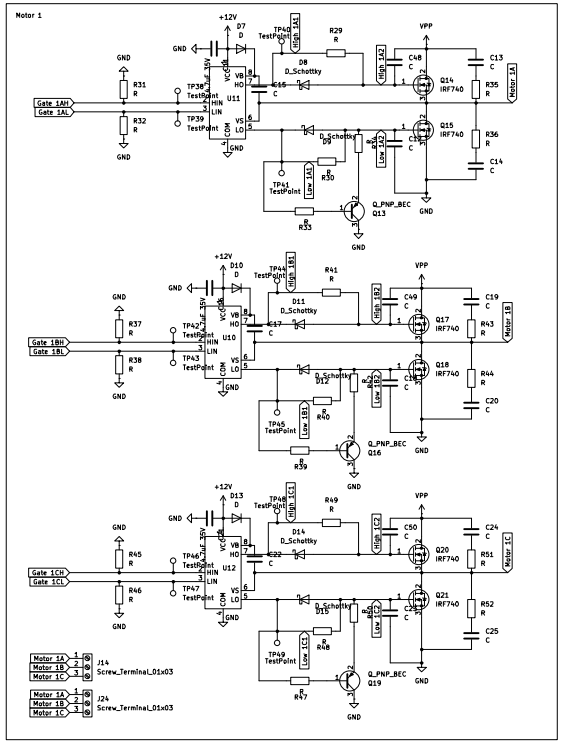
Motor 1
Gate 1AH
Gate 1AL
Gate 1BH
Gate 1BL
Gate 1CH
Gate 1CL
Motor 1A
Motor 1B
Motor 1C
J14
J24
Screw_Terminal_01x03
Q_PNP_BEC
IRF740

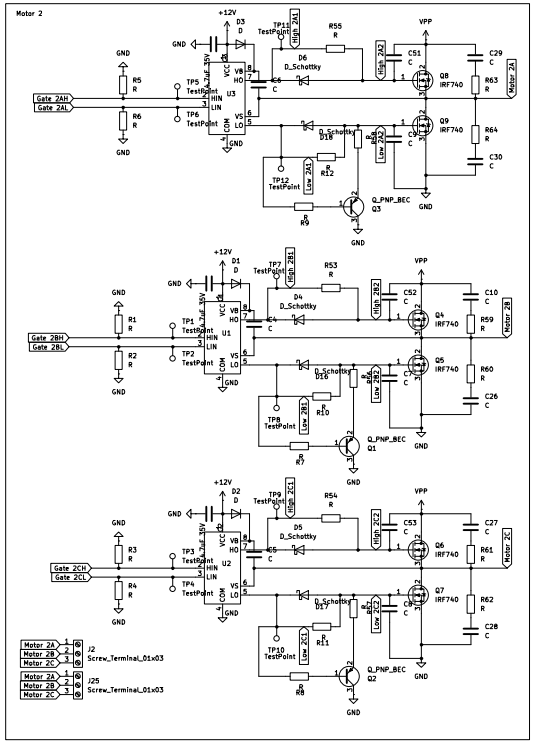
Motor 2
Gate 2AH
Gate 2AL
Gate 2BH
Gate 2BL
Gate 2CH
Gate 2CL
Motor 2A
Motor 2B
Motor 2C
J2
J25
Screw_Terminal_01x03
Q_PNP_BEC
IRF740

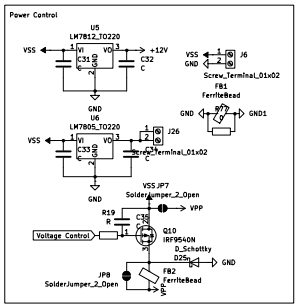
Power Control
LM7812_TO220
LM7805_TO220
Screw_Terminal_01x02
FerriteBead
SolderJumper_2_Open
Voltage Control
IRF9540N
D_Schottky

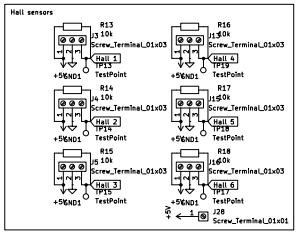
Hall sensors
Screw_Terminal_01x03
Screw_Terminal_01x01