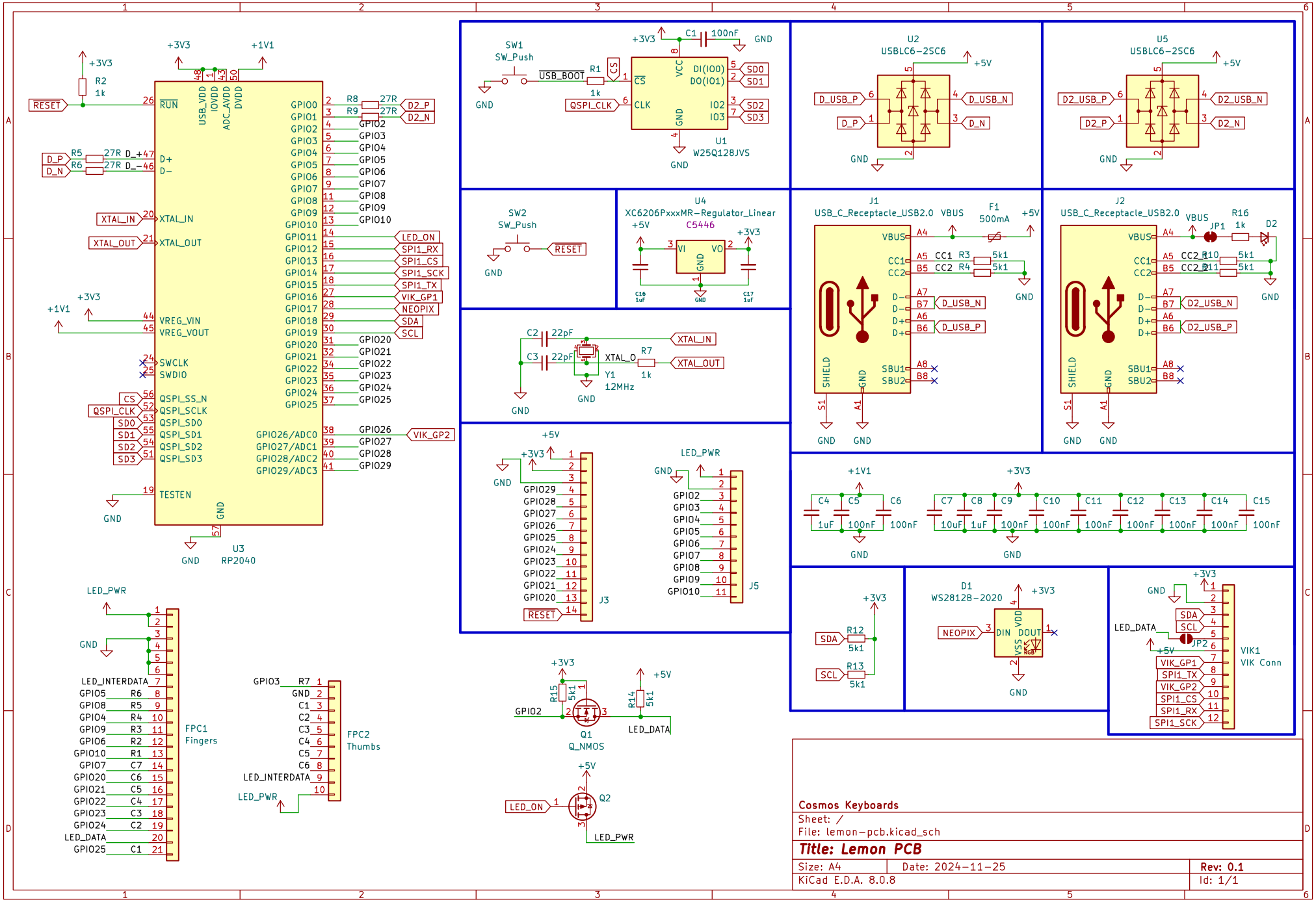
U3
RP2040
U1
W25Q128JVS
U2
USBLC6-2SC6
U5
USBLC6-2SC6
J1
USB_C_Receptacle_USB2.0
J2
USB_C_Receptacle_USB2.0
U4
XC6206PxxxMR-Regulator_Linear
C5446
SW1
SW_Push
SW2
SW_Push
Y1
12MHz
J3
J5
FPC1
Fingers
FPC2
Thumbs
D1
WS2812B-2020
VIK1
VIK Conn
Q1
Q_NMOS
Q2
Cosmos Keyboards
Sheet: /
File: lemon-pcb.kicad_sch
Title: Lemon PCB
Size: A4
Date: 2024-11-25
Rev: 0.1
KiCad E.D.A. 8.0.8
Id: 1/1