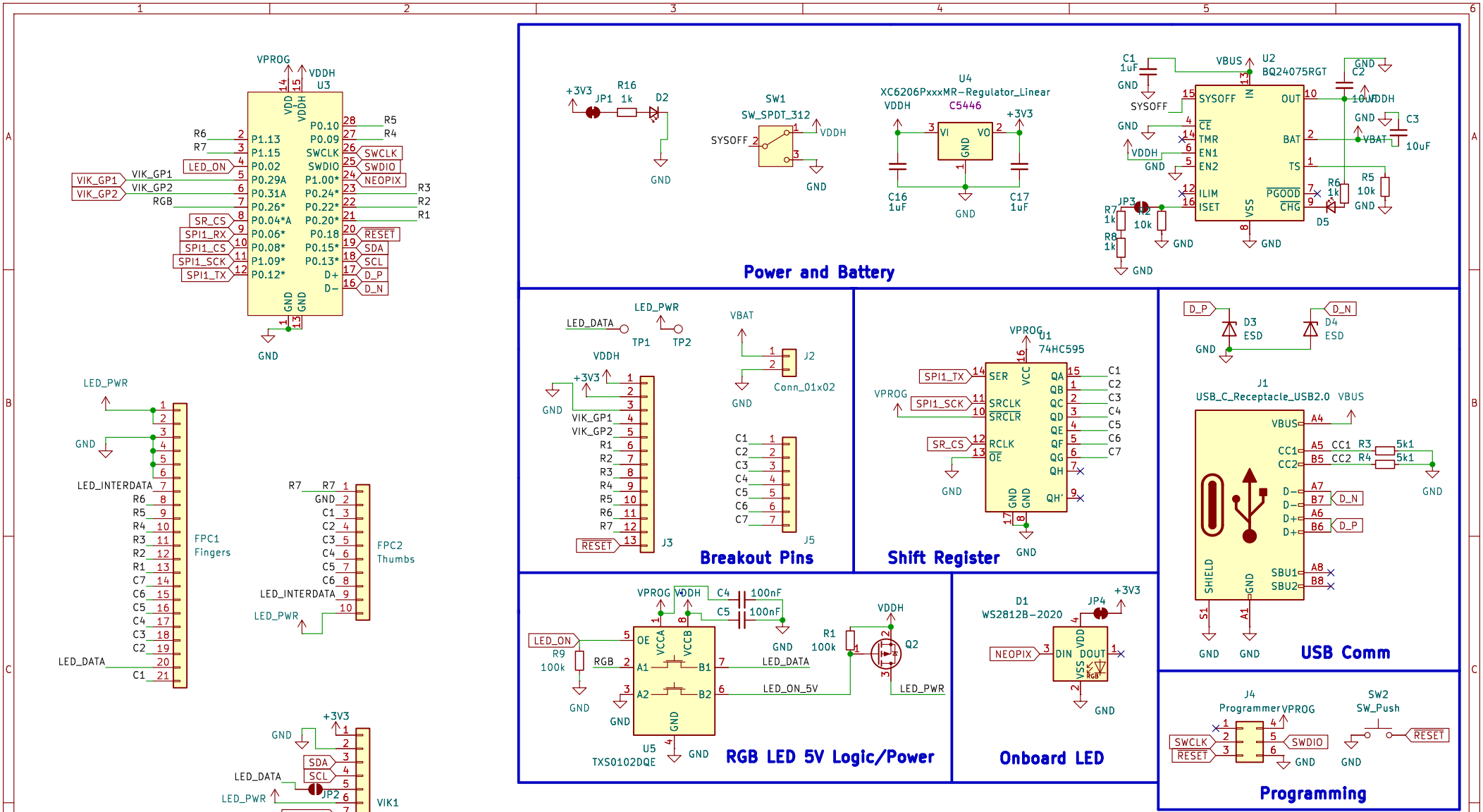

Cosmos Keyboards

Sheet: /

File: lemon−pcb−wireless.kicad_sch

Title: Lemon PCB Wireless

Size: A4	Date: 2025−07−25	Rev: v0.3
KiCad E.D.A. 9.0.5		Id: 1/1