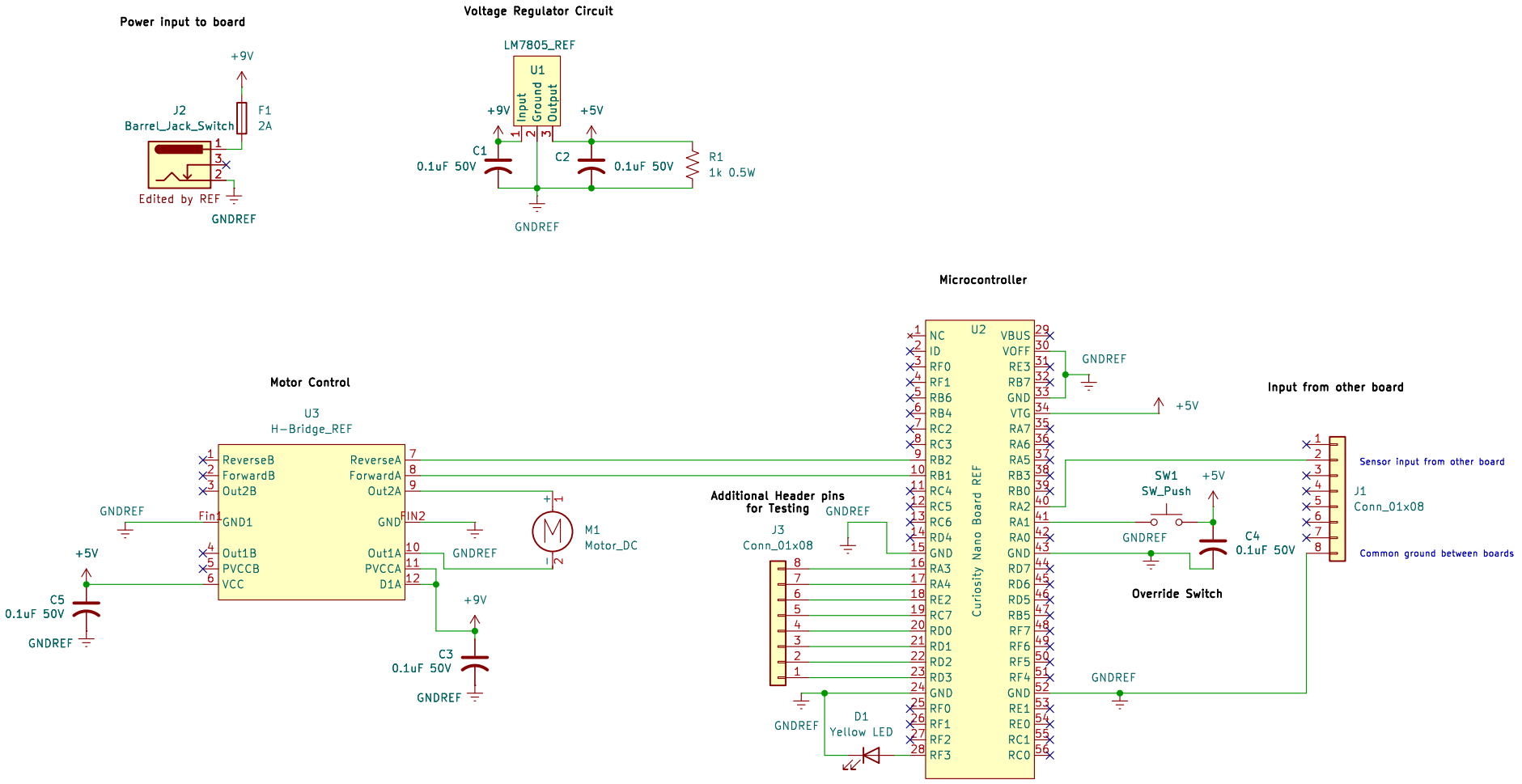

Riley Franco
Team 207

Sheet: /
File: Subsystem_Schematic_Design.kicad_sch

Title: Subsystem_Schematic_Design

Size: A4	Date: 2025-10-20	**Rev: 2**
KiCad E.D.A. 9.0.4		Id: 1/1