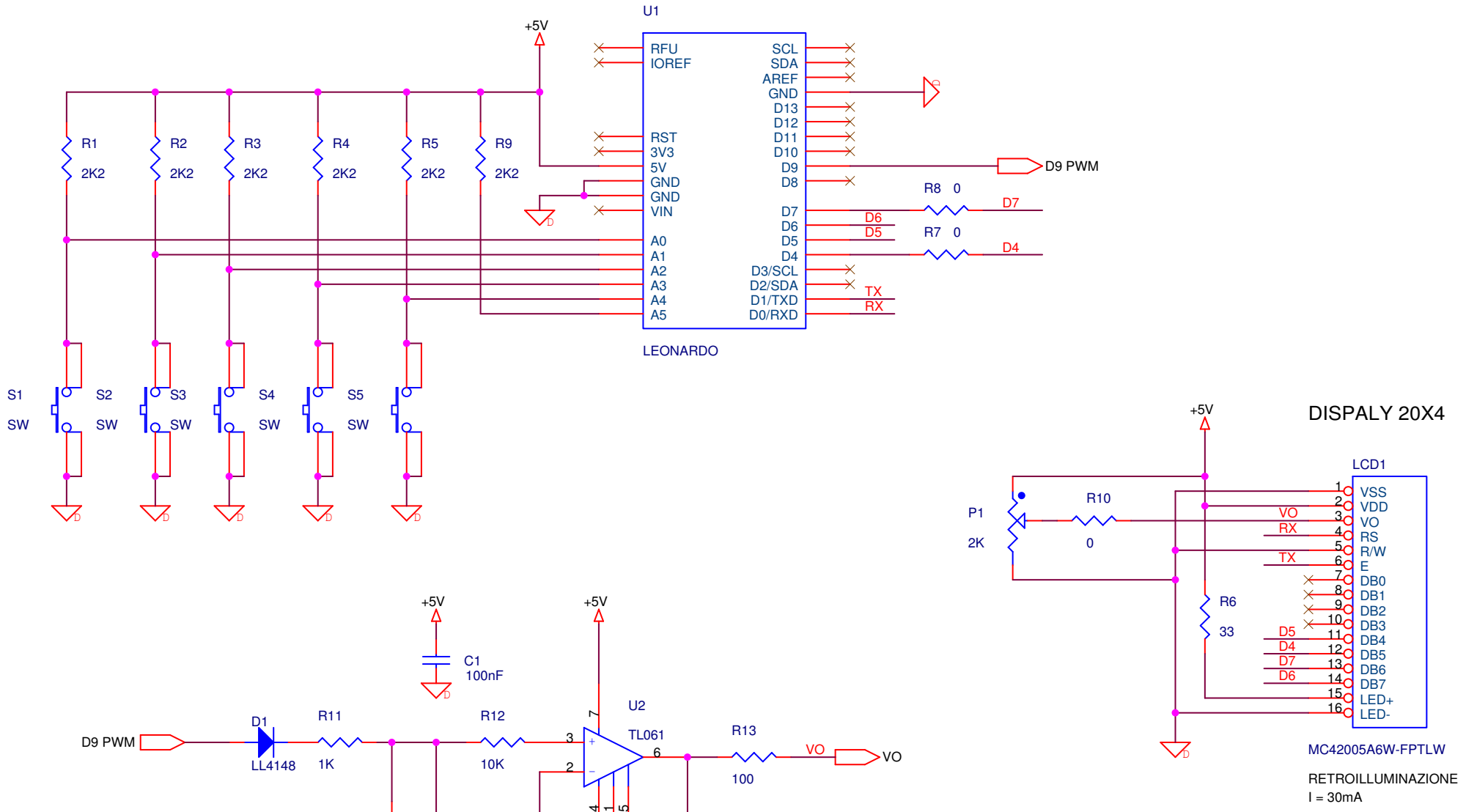

LEANE International S.r.l.
Via dei Mestieri, 8 20049 Concorezzo (MI)
Tel. 039/6908132 Fax. 039/6886215

Title	Schema scheda base Display LCD 20x4 con Arduino
Size	
Document Number	ARDUINO_20X4.DSN
Rev	
Date:	Tuesday, January 26, 2016
Sheet	1 of 1