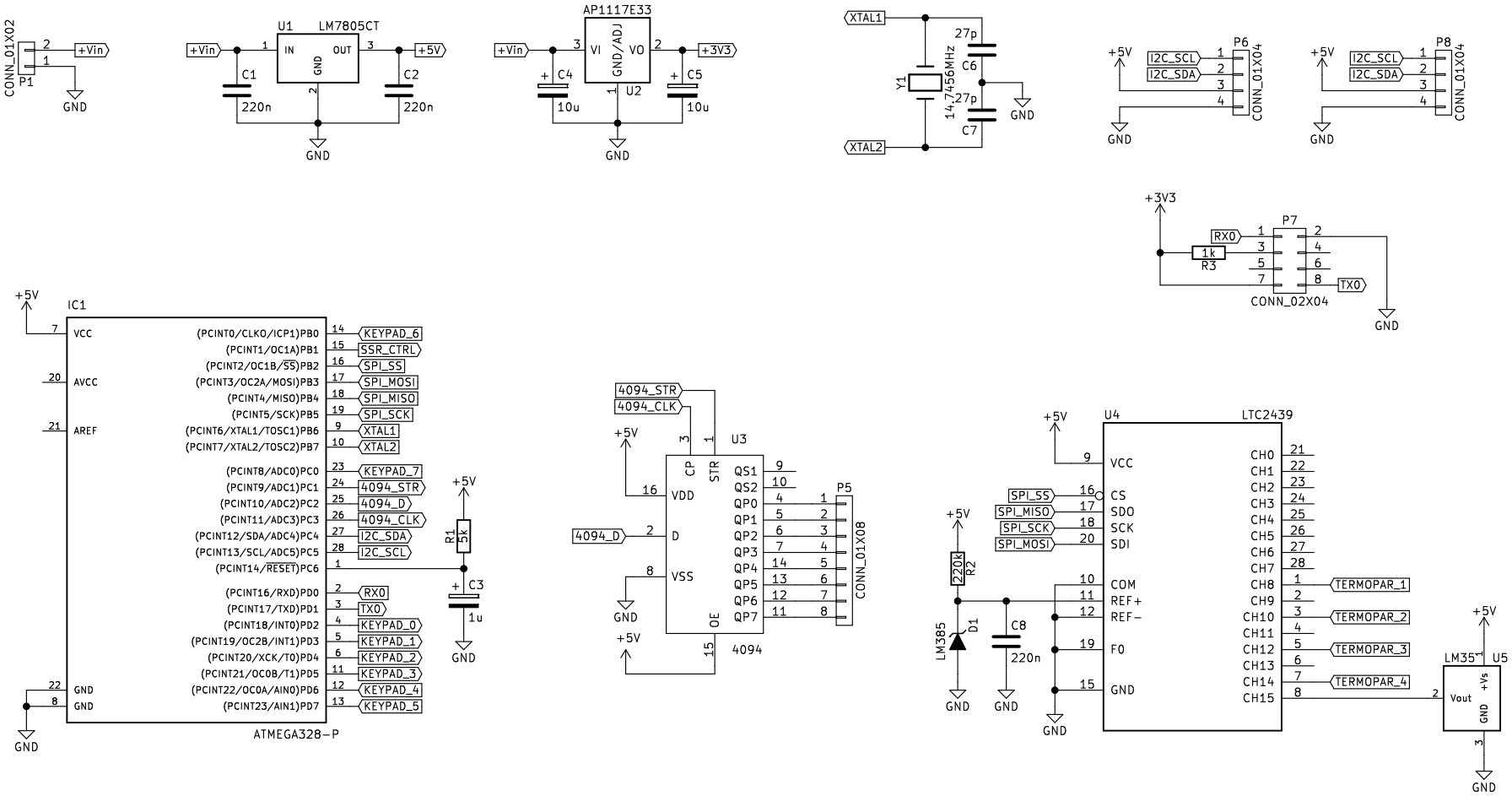

Sheet: /
File: the_box.sch

Title:

Size: A4	Date:	**Rev:**
KiCad E.D.A. kicad (5.0.1-3-g963ef8bb5)		Id: 1/1