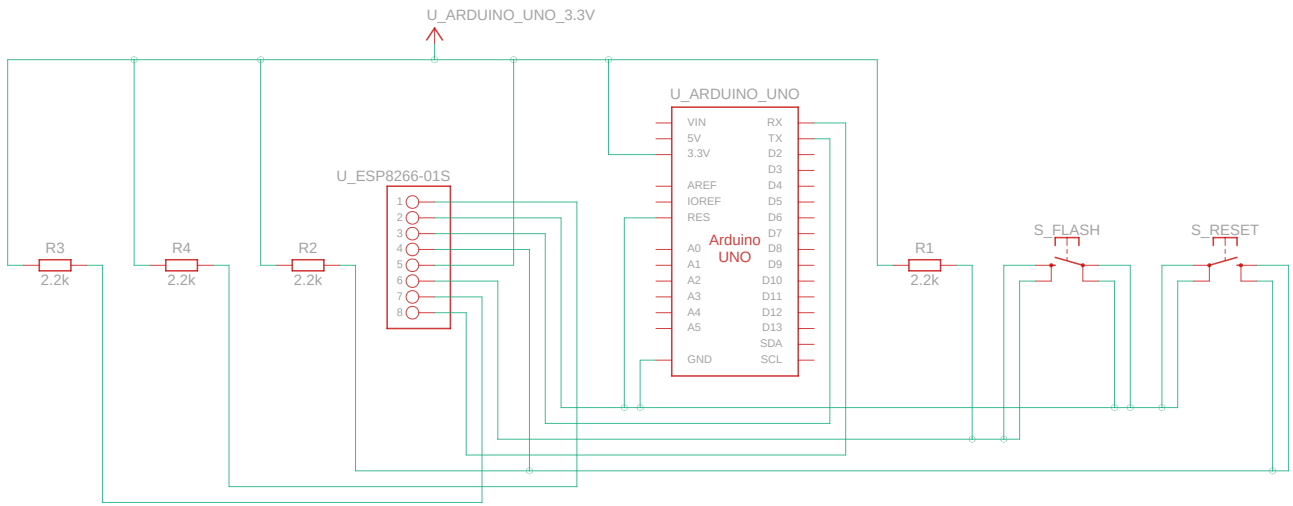

Made with Tinkercad®

Title: toggler-network

Date: 3/2/2024, 09:39:27

Sheet: 1/1