MIMXRT1060-EVK

Table of Content

Page 1	COVER
Page 2	BLOCK DIAGRAM
Page 3	MAIN POWER
Page 4	POWER DOMAIN
Page 5	MIMXRT1062DVL6A
Page 6	LCD
Page 7	USB
Page 8	CAN
Page 9	AUDIO
Page 10	ETHERNET
Page 11	SD/FLASH/EMMC
Page 12	ARDUINO/JTAG
Page 13	SDRAM
Page 14	FREELINK
Page 15	CSI
Page 16	BOOT
Page 17	MISC
Page 18	
Page 19	
Page 20	
Page 21	
Page 22	
Page 23	
Page 24	
Page 25	
Page 26	
Page 26	
Page 27	
Page 28	

Revision History

Rev. Code	Date	By	Description
X1	2018-2-25	Shawn Shi	For BOM preparation
X2	2018-3-12	Shawn Shi	Initial Release
A	2018-5-2	Shawn Shi	Delete U47 for JTAG_RESET
A1	2018-5-17	Shawn Shi	Rename LPC JTAG_TDI signa to JTAG_TDI_L
A2	2018-6-15	Shawn Shi	Change RT1050 symbol to RT1060, Change oscillator load capacitor value C42 and C43.

1. Unless Otherwise Specified:

   All resistors are in ohms, 1/16 Watt,0402
   All capacitors are in uF,0402
   All voltages are DC
   All polarized capacitors are aluminum electrolytic

2. Interrupted lines coded with the same letter or letter combinations are electrically connected.

3. Device type number is for reference only. The number varies with the manufacturer.

4. Special signal usage:
   _B Denotes - Active-Low Signal
   <> or [] Denotes - Vectored Signals

5. Interpret diagram in accordance with American National Standards Institute specifications, current revision, with the exception of logic block symbology.

ICAP Classification: CP: ___ IUO: X PUBI: ___

Drawing Title: MIMXRT1060-EVK

Page Title: COVER

Size	Document Number	Rev
C	SCH-31357, PDF: SPF-31357	A2

Date: Thursday, June 28, 2018 | Sheet 1 of 17

Blcok Diagram Rev A2#####

MIMXRT1060-EVK

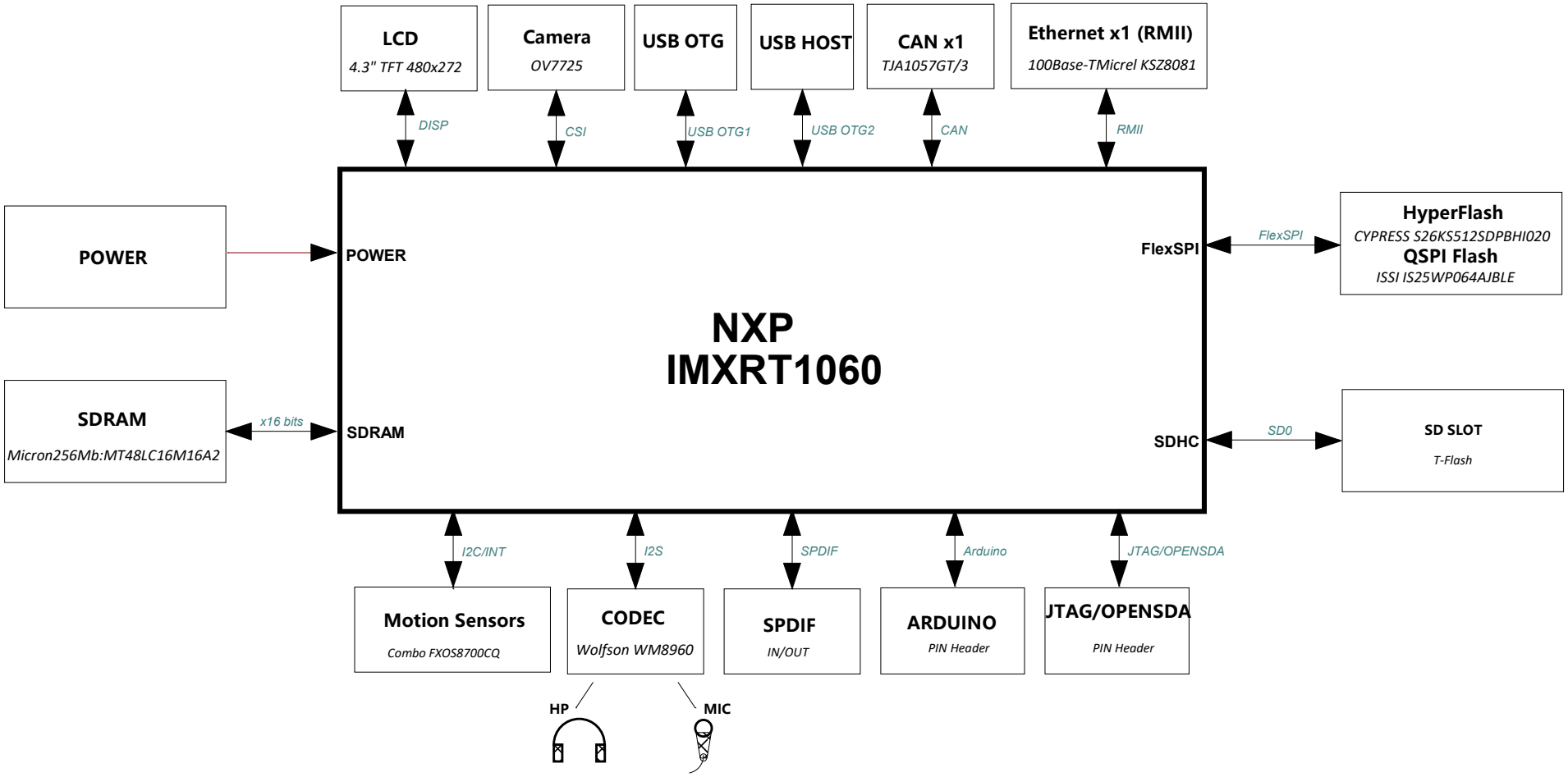

ICAP Classification: CP: ___ IUO: X PUBI: ___

Drawing Title: MIMXRT1060-EVK

Page Title: BLOCK DIAGRAM

Size	Document Number	Rev
C	SCH-31357, PDF: SPF-31357	A2

Date: Thursday, June 07, 2018 Sheet 2 of 17

Main Power

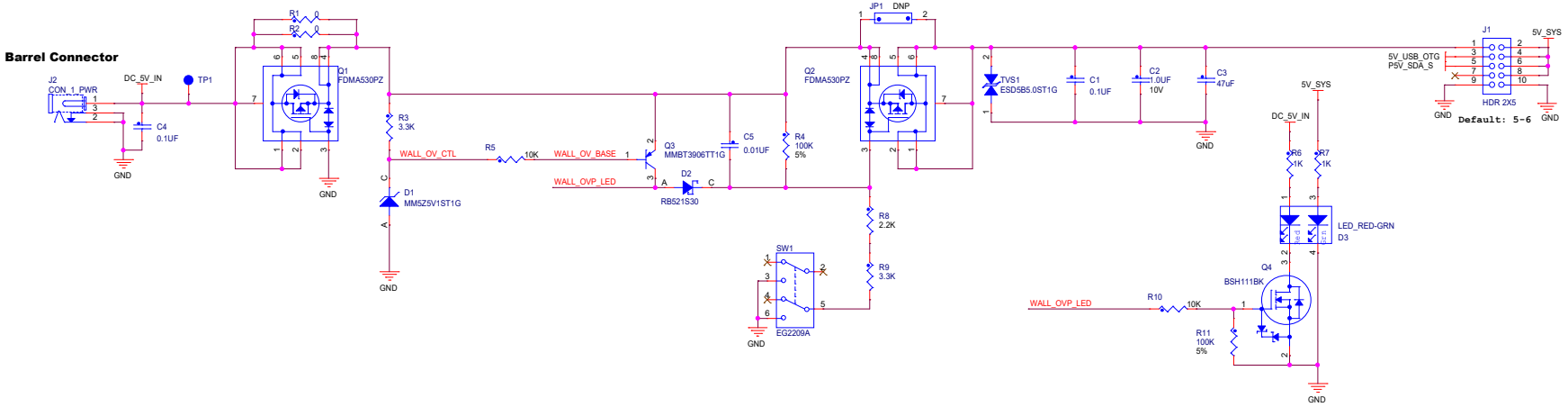

Board Mounting Holes

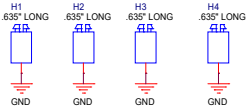

Ground TPs

Layout Note: Place Ground TPs
to assist signal measurement.

ICAP Classification:	CP: ___	IUO: X	PUBI: ___
Drawing Title:	MIMXRT1060-EVK		
Page Title:	MAIN POWER		
Size C	Document Number SCH-31357, PDF: SPF-31357		Rev A2
Date: Monday, June 11, 2018	Sheet 3 of 17		

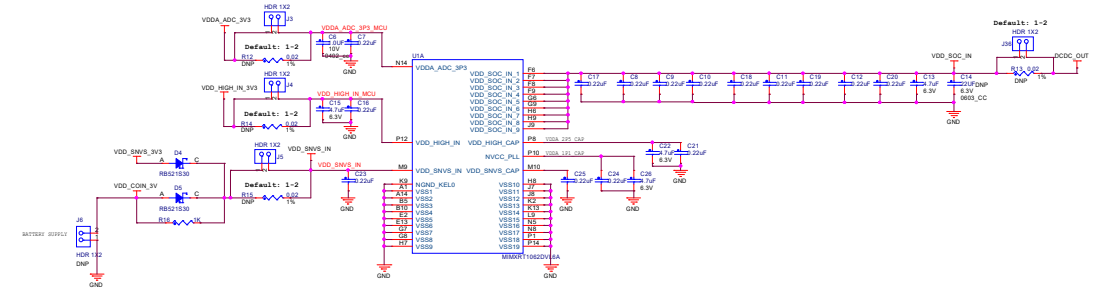

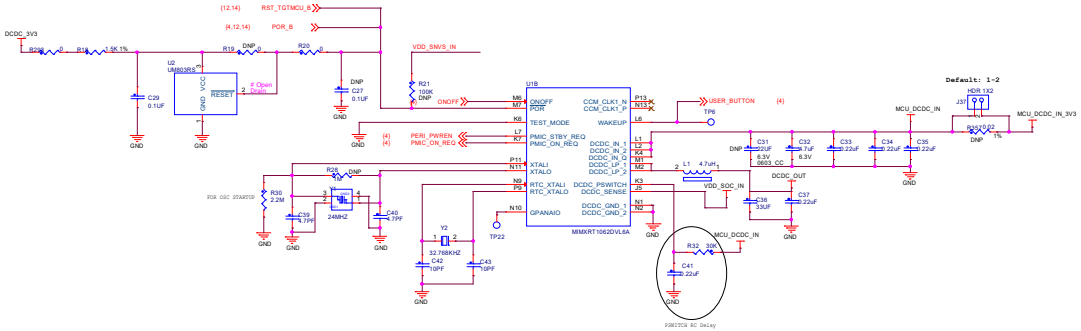

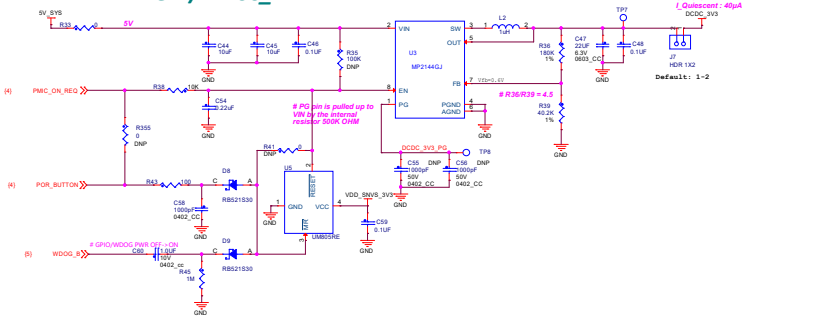

VDDHIGH / NVCC_xxx

FLASH VCC

1V8 LDO MAX 250 mA

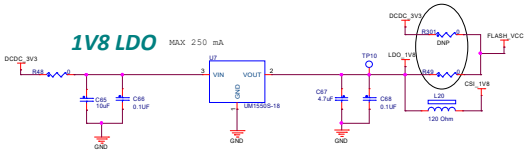

BUTTON

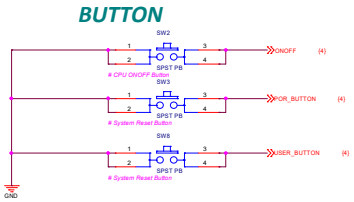

USER LED

SD CARD POWER SWITCH

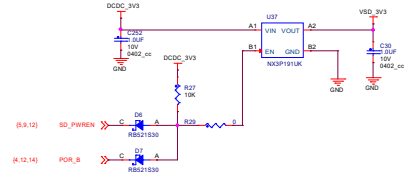

LCD 3V3 POWER SWITCH

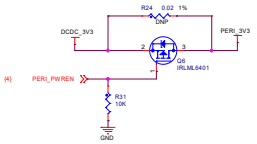

3V3 LDO for SNVS

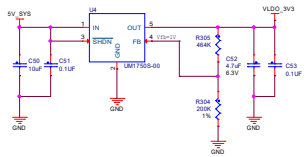

SNVS

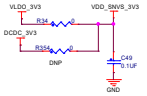

ADC

DCDC_IN

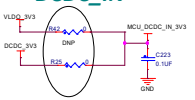

VDD_HIGH_IN

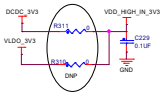

NVCC_SD <SD3.0> MAX 350 mA

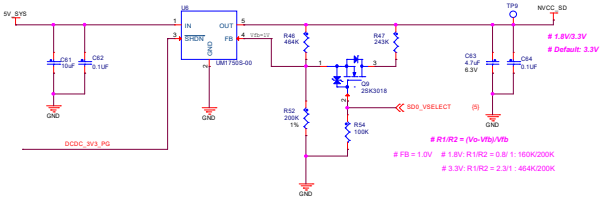

ICAP Classification:	CP: ___ IUO: X PUBI: ___
Drawing Title:	MIMXRT1060-EVK
Page Title:	POWER DOMAIN
Size: D	Document Number: SCH-31357, PDF: SPF-31357 Rev: A2
Date: Thursday, June 28, 2018	Sheet 4 of 17

MCU PINOUT

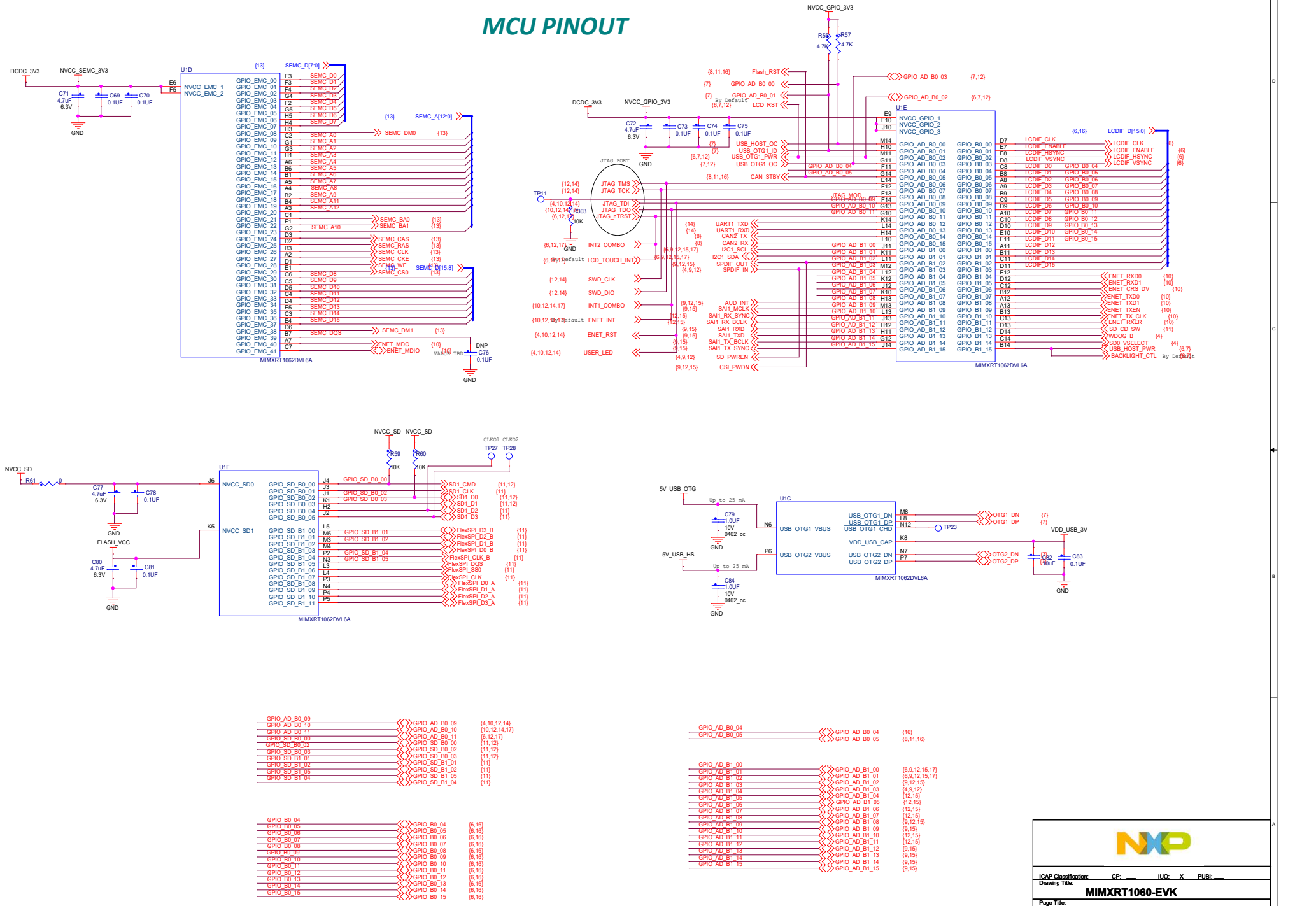

ICAP Classification: CP: ___ IUO: X PUBI: ___

Drawing Title: **MIMXRT1060-EVK**

Page Title: **MIMXRT1062DVL6A**

Size	Document Number	Rev
C	SCH-31357, PDF: SPF-31357	A2

Date: Monday, June 11, 2018 Sheet 5 of 17

Backlight Control

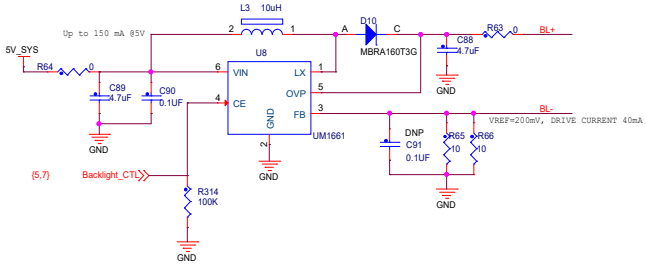

LCD CON

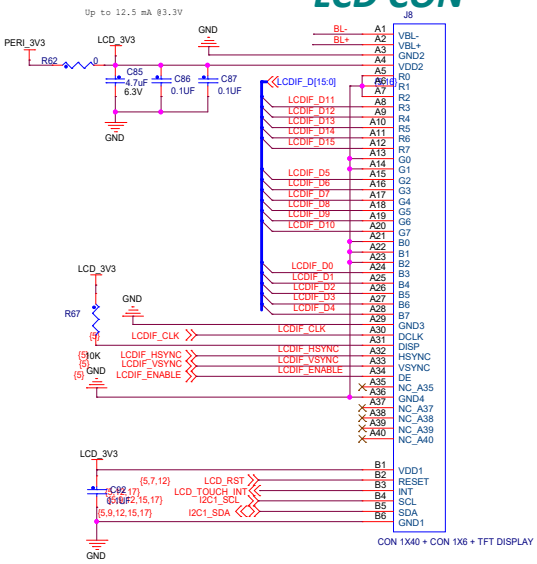

ICAP Classification:	CP: ___	IUO: X	PUBI: ___
Drawing Title:	MIMXRT1060-EVK		
Page Title:	LCD		
Size C	Document Number SCH-31357, PDF: SPF-31357		Rev A2
Date: Monday, June 11, 2018	Sheet 6 of 17		

USB OTG

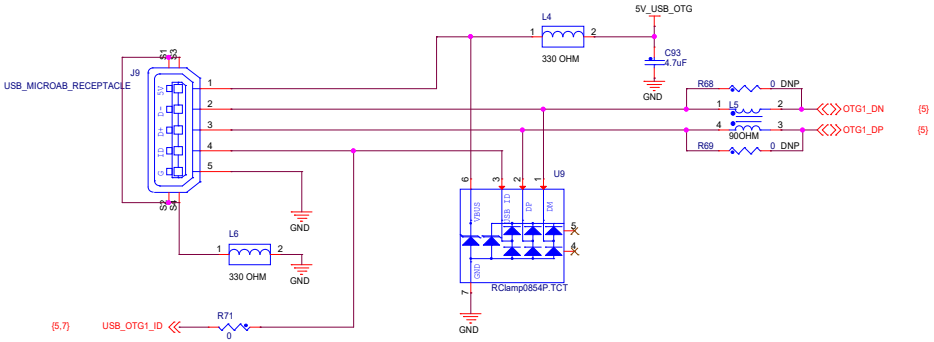

USB POWER

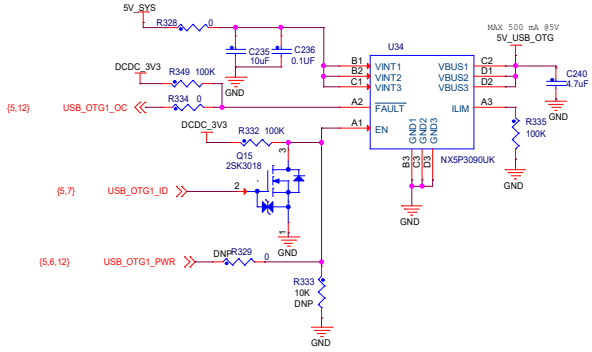

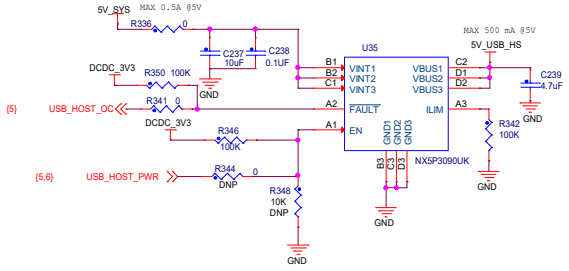

USB HOST

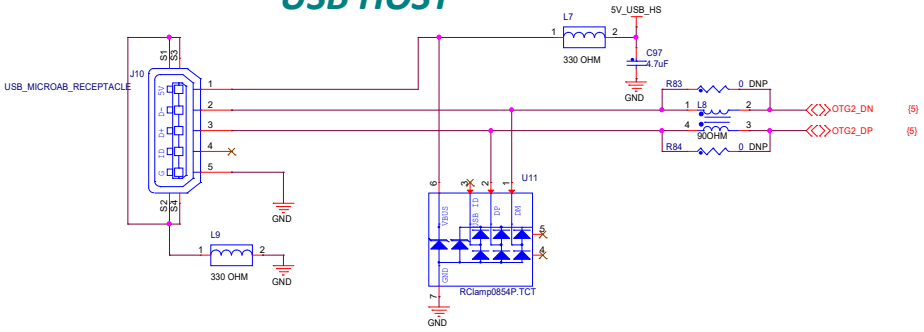

ICAP Classification:	CP: ___ IUO: X PUBI: ___	
Drawing Title:	MIMXRT1060-EVK	
Page Title:	USB	
Size C	Document Number SCH-31357, PDF: SPF-31357	Rev A2
Date: Monday, June 11, 2018	Sheet 7 of 17	

CAN BUS

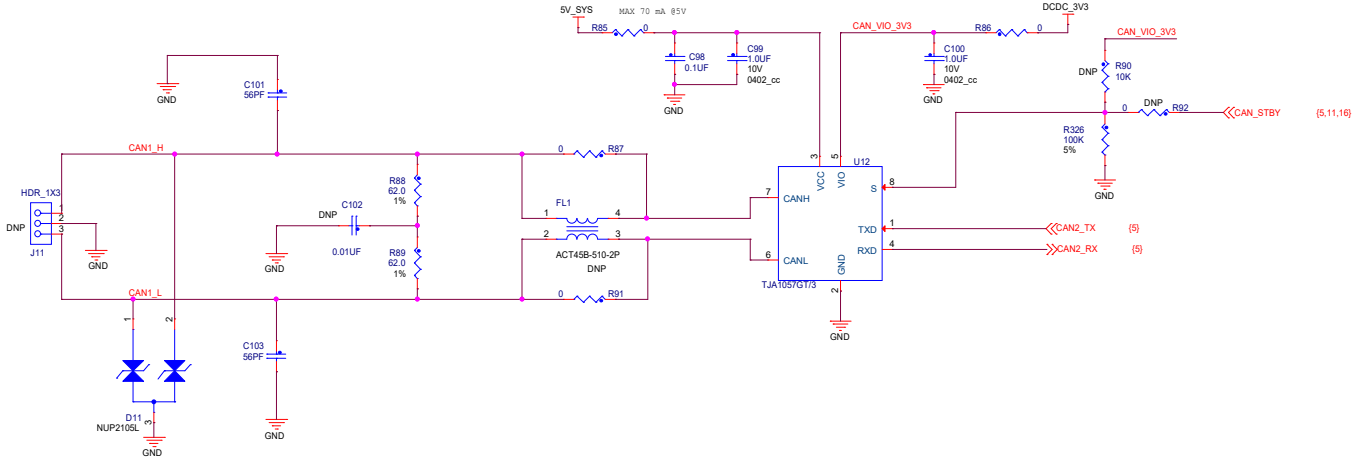

ICAP Classification:	CP: ___ IUO: X PUBI: ___	
Drawing Title:	MIMXRT1060-EVK	
Page Title:	CAN	
Size C	Document Number SCH-31357, PDF: SPF-31357	Rev A2
Date: Monday, June 11, 2018	Sheet 8 of 17	

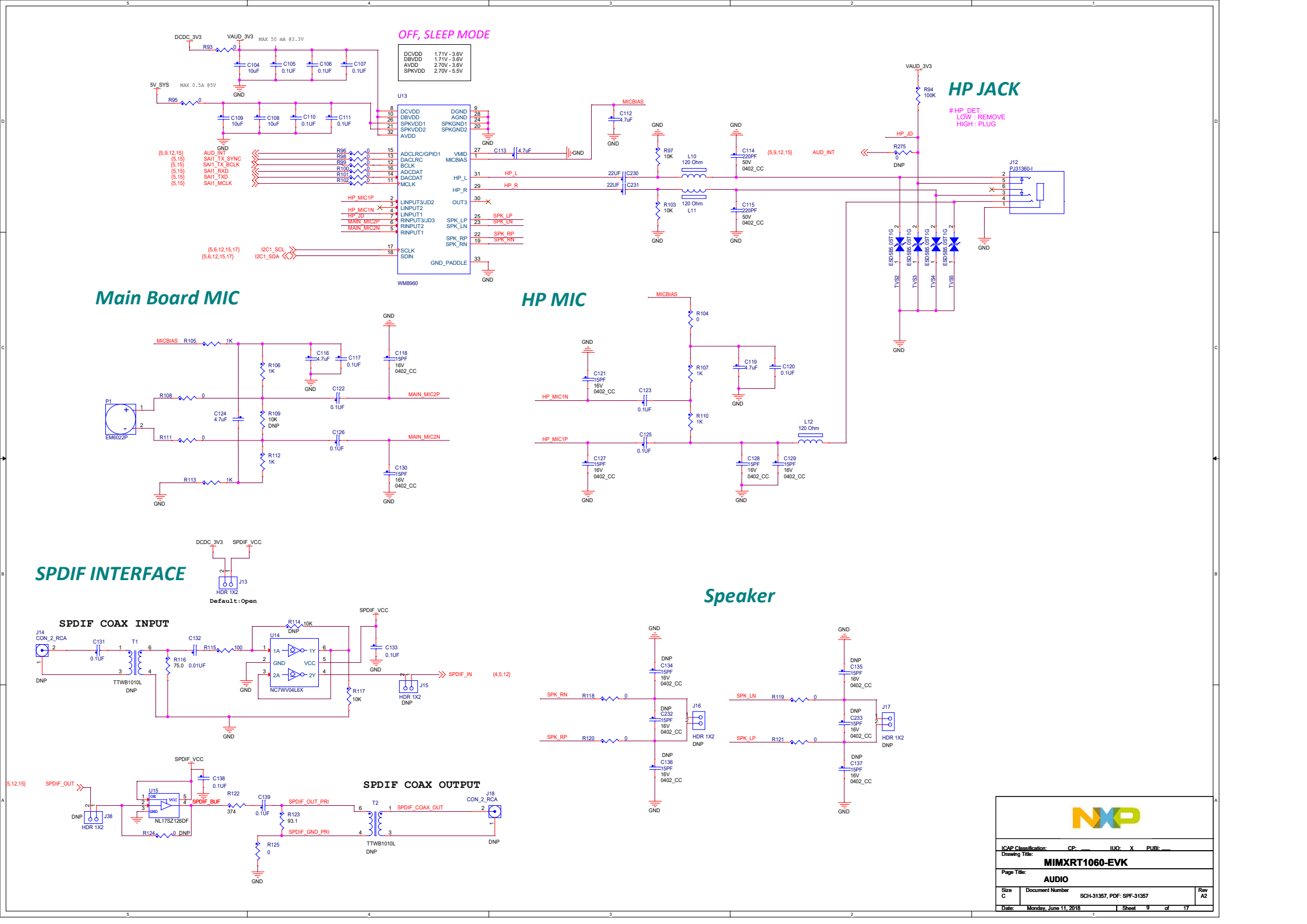
OFF, SLEEP MODE
DCVDD 1.71V - 3.6V
DBVDD 1.71V - 3.6V
AVDD 2.70V - 3.6V
SPKVDD 2.70V - 5.5V
WM8960
HP JACK
HP_DET:
LOW : REMOVE
HIGH : PLUG
Main Board MIC
HP MIC
SPDIF INTERFACE
SPDIF COAX INPUT
SPDIF COAX OUTPUT
Speaker
Default:Open
DNP
MIMXRT1060-EVK
AUDIO
SCH-31357, PDF: SPF-31357
Monday, June 11, 2018

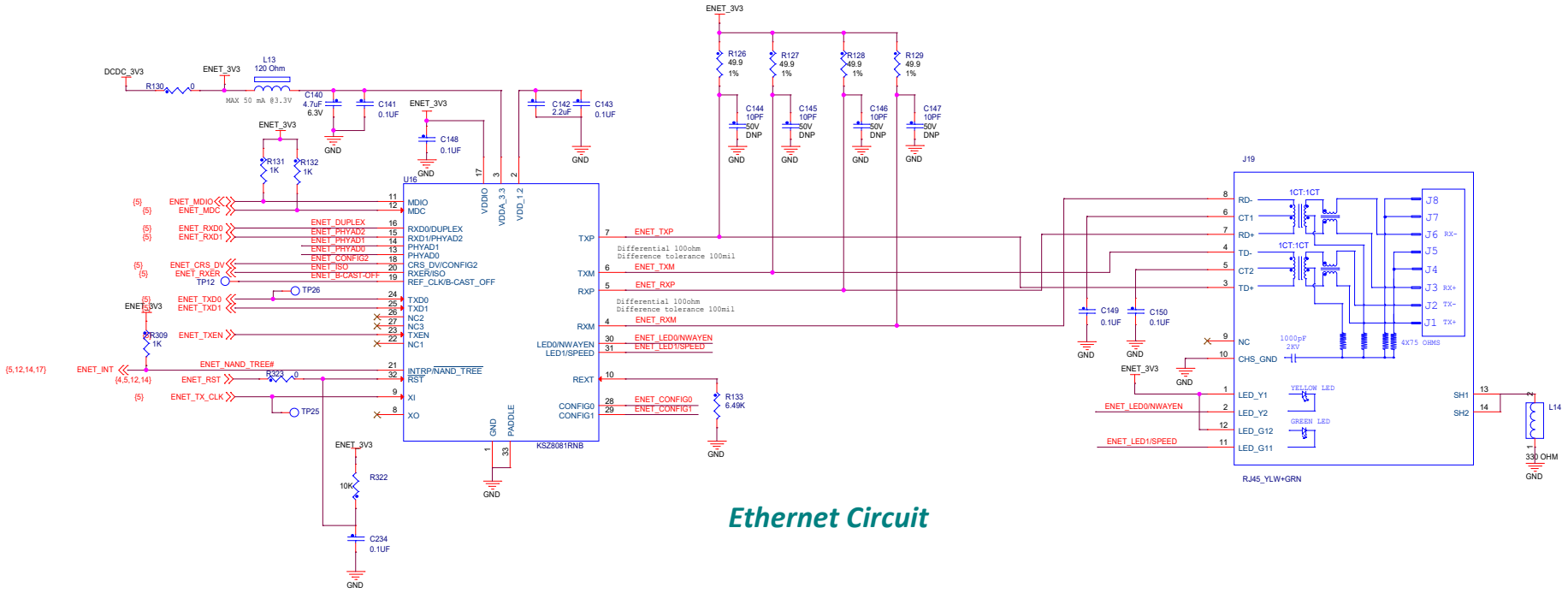

Ethernet Circuit

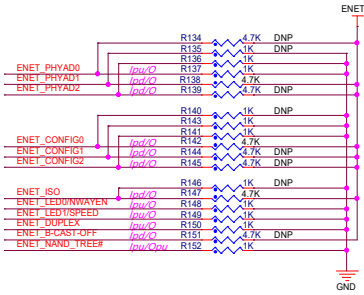

# CFG	Description
PHYAD[2:0]	PHY ADDR 00-XXX (00010 DEFAULT)
CONFIG[2:0]	IF MODE 001 RMII 101 RMII Back-to-Back xxx Reserved-not used
ISO	ISOLATE mode Pull-up = Enable Pull-down (default) = Disable
SPEED	SPEED mode Pull-up (default) = 100Mbps Pull-down = 10Mbps

# CFG	Description
DUPLEX	DUPLEX mode Pull-up (default) = Half Duplex Pull-down = Full Duplex
NWAYEN	Nway Auto-Negotiation Pull-up (default) = Enable Pull-down = Disable
B_CAST_OFF	Broadcast Off - for PHY Address 0 Pull-up = PHY Address 0 set as unique PHY addr Pull-down (default) = PHY Address 0 set as broadcast PHY addr
NAND_TREE#	NAND Tree Mode Pull-up (default) = Disable Pull-down = Enable

ESD PROTECTION

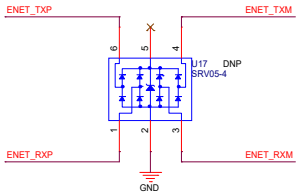

ICAP Classification: CP: ___ IUO: X PUBI: ___

Drawing Title: **MIMXRT1060-EVK**

Page Title: **ETHERNET**

Size	Document Number	Rev
C	SCH-31357, PDF: SPF-31357	A2

Date: Monday, June 11, 2018 Sheet 10 of 17

SD CARD

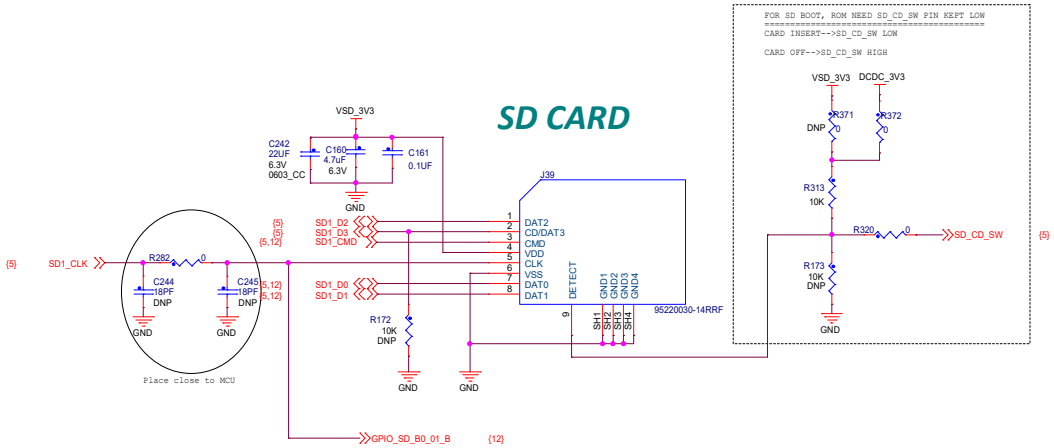

OPTION1: USE Hyperflash(DNP R153~R158, Mount R356,R361~R366)
OPTION2: USE QSPI FLASH(Mount R153~R158, DNP R356,R361~R366)

1V8 HyperFlash

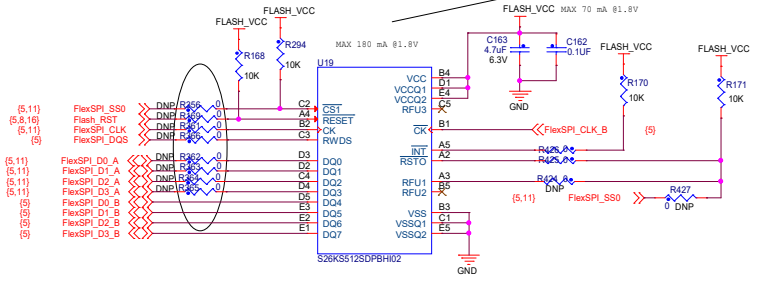

Share the same package with S27KS0641DPBHI023
(if HYPERRAM is replaced, then DNP R425,R426,Mount R424,R427)

1V8 QSPI Flash

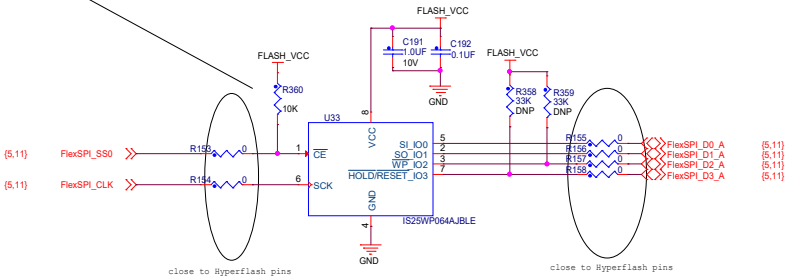

ICAP Classification:	CP: ___	IUO: X	PUBI: ___
Drawing Title:	MIMXRT1060-EVK		
Page Title:	SD/FLASH		
Size: C	Document Number: SCH-31357, PDF: SPF-31357		Rev: A2
Date: Monday, June 11, 2018	Sheet 11 of 17		

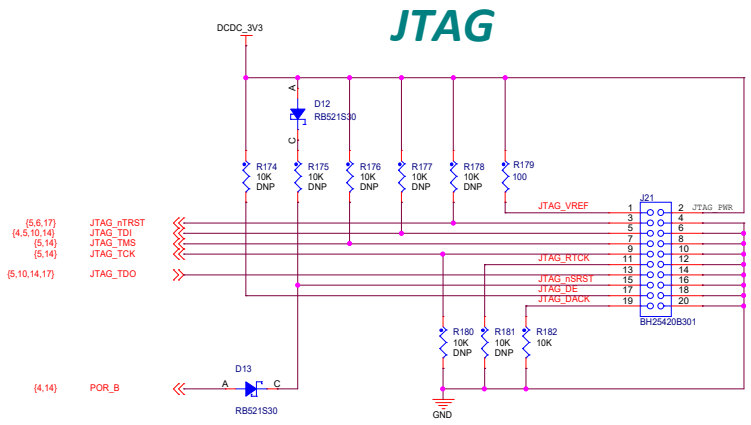

Arduino Interface

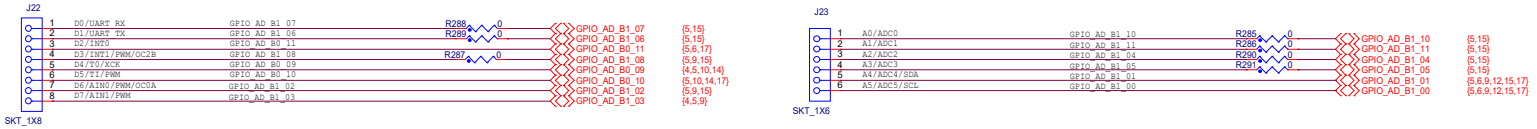

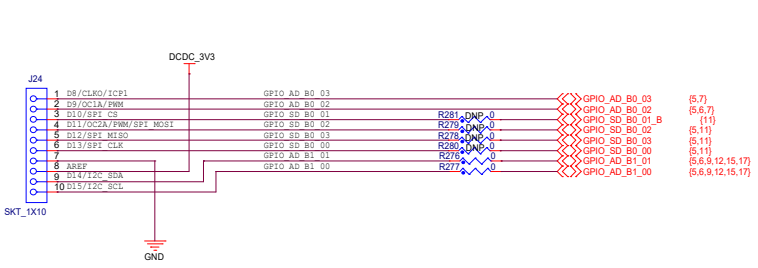

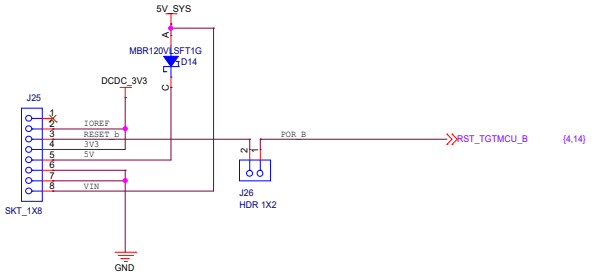

ICAP Classification:	CP: ___	IUO: X	PUBI: ___
Drawing Title:	MIMXRT1060-EVK		
Page Title:	DEBUG/JTAG		
Size: C	Document Number: SCH-31357, PDF: SPF-31357		Rev: A2
Date: Monday, June 11, 2018	Sheet 12 of 17		

SDRAM

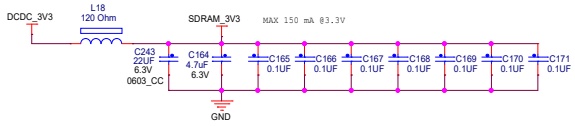

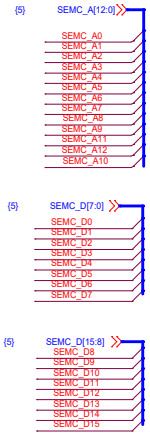

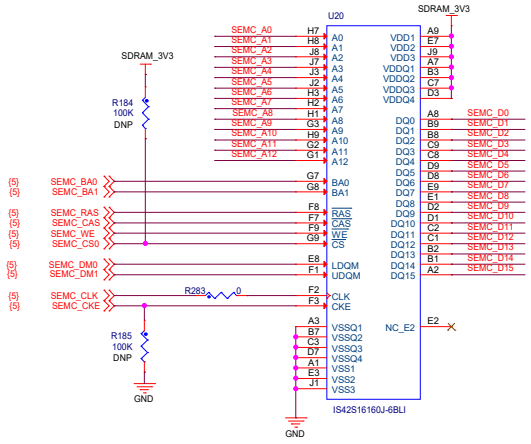

ICAP Classification:	CP: ___	IUO: X	PUBI: ___
Drawing Title:	MIMXRT1060-EVK		
Page Title:	SDRAM		
Size C	Document Number SCH-31357, PDF: SPF-31357		Rev A2
Date: Monday, June 11, 2018		Sheet 13 of 17	

Freelink Interface

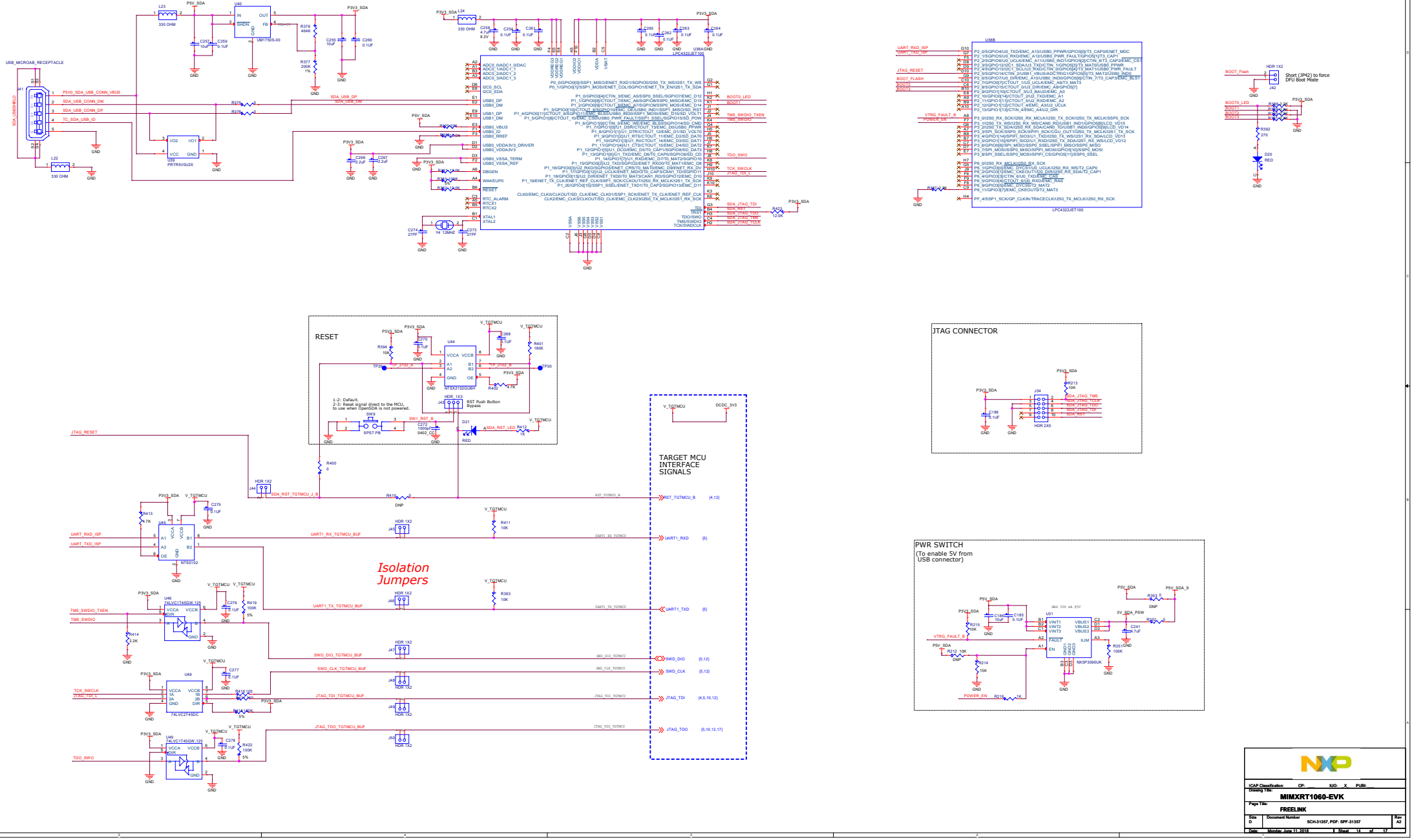

Camera Signals

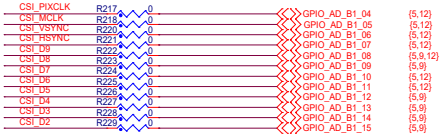

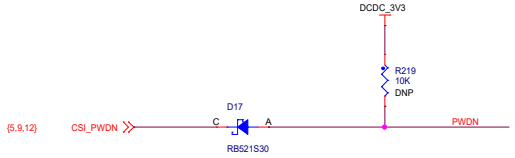

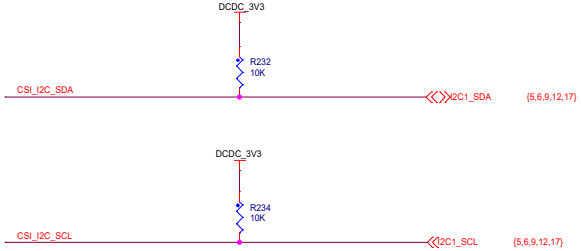

FPC FOR MT9M114/OV7725 MODULE

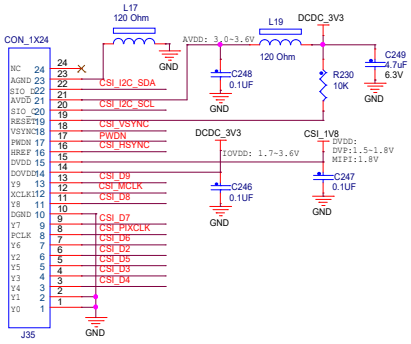

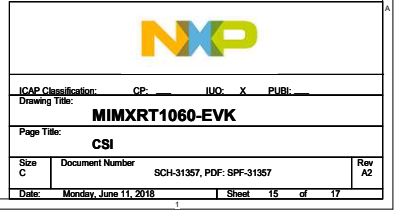

FUSE MAP

	0/1	0/1	0/1	0/1	0/1	0/1	0/1	0/1	0/1	0/1	0/1	0/1
TYPE	**BOOT_CFG[11]**	**BOOT_CFG[10]**	**BOOT_CFG[9]**	**BOOT_CFG[8]**	**BOOT_CFG[7]**	**BOOT_CFG[6]**	**BOOT_CFG[5]**	**BOOT_CFG[4]**	**BOOT_CFG[3]**	**BOOT_CFG[2]**	**BOOT_CFG[1]**	**BOOT_CFG[0]**
FlexSPI1 - Serial NOR	*Infinit-Loop: (Debug USE only) 0 - Disable 1- Enable*	*FLASH_TYPE 000-Device supports 3B read by default 001-Device supports 4B read by default 010-HyperFlash 1V8 011-HyperFlash 3V3 100-MXIC Octal DDR*			*0*	*0*	*0*	*0*	*HOLD TIME: 00 - 500us 01 - 1ms 10 - 3ms 11 - 10ms*		*EncryptedXIP 0 - Disabled 1- Enabled*	*Reserved*
SD	*Infinit-Loop: (Debug USE only) 0 - Disable 1- Enable*	*Reserved*	*Bus Width: 0 - 1-bit 1 - 4-bit*	*SD1 VOLTAGE SELECTION: 0 - 3.3V 1 - 1.8V*	*0*	*1*	*SD/SDXC Speed: 00 - Normal/SDR12 01 - High/SDR25 10 - SDR50 11 - SDR104*		*SD Power Cycle Enable: '0' - No power cycle '1' - Enabled via USDHC_RST pad*	*SD Loopback Clock Source Sel: (for SDR50 and SDR104 only) '0' - through SD '1' - direct*	*Port Select: 0 - eSDHC1 1 - eSDHC2*	*Fast Boot: 0 - Regular 1 - Fast Boot*

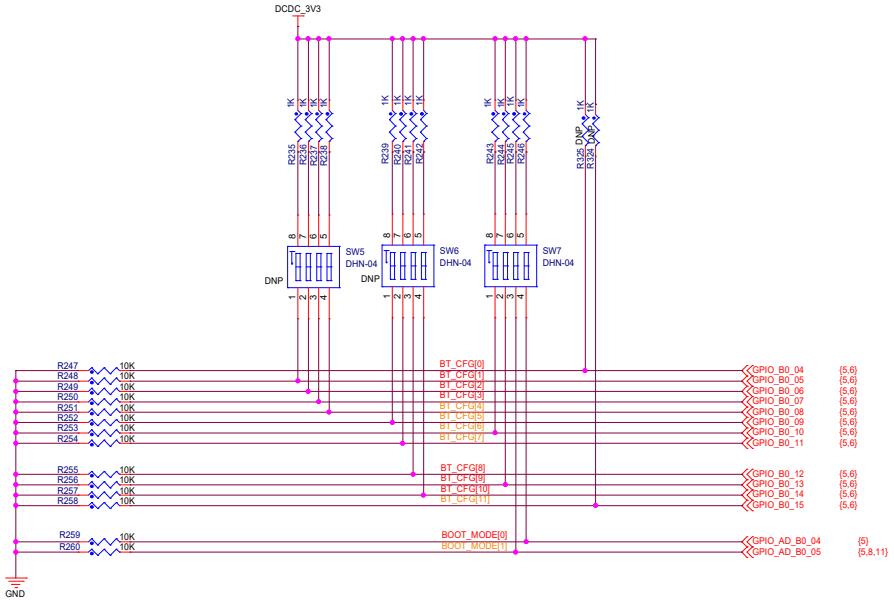

ICAP Classification: CP: ___ IUO: X PUBI: ___

Drawing Title: **MIMXRT1060-EVK**

Page Title: **BOOT**

Size	Document Number	Rev
C	SCH-31357, PDF: SPF-31357	A2

Date: Monday, June 11, 2018 Sheet 16 of 17

COMBO SENSOR

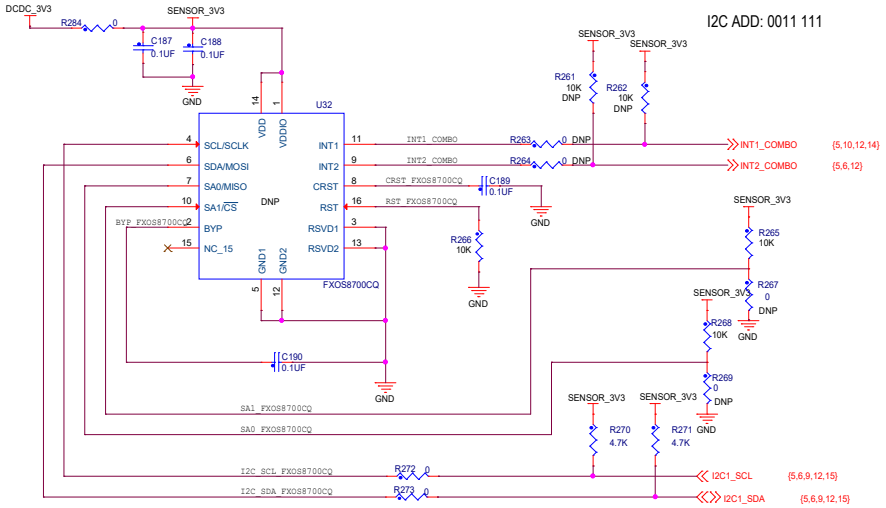

FXOS8700CQ COMBO SENSOR

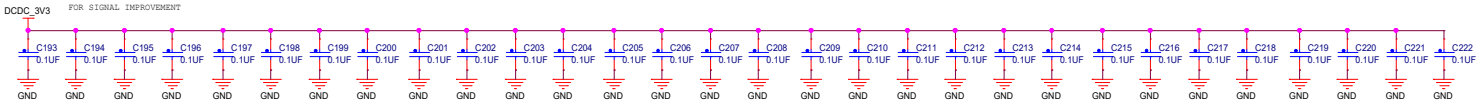

ICAP Classification:	CP: ___	IUO: X	PUBI: ___
Drawing Title:	MIMXRT1060-EVK		
Page Title:	MISC		
Size C	Document Number SCH-31357, PDF: SPF-31357		Rev A2
Date: Monday, June 11, 2018	Sheet 17 of 17		