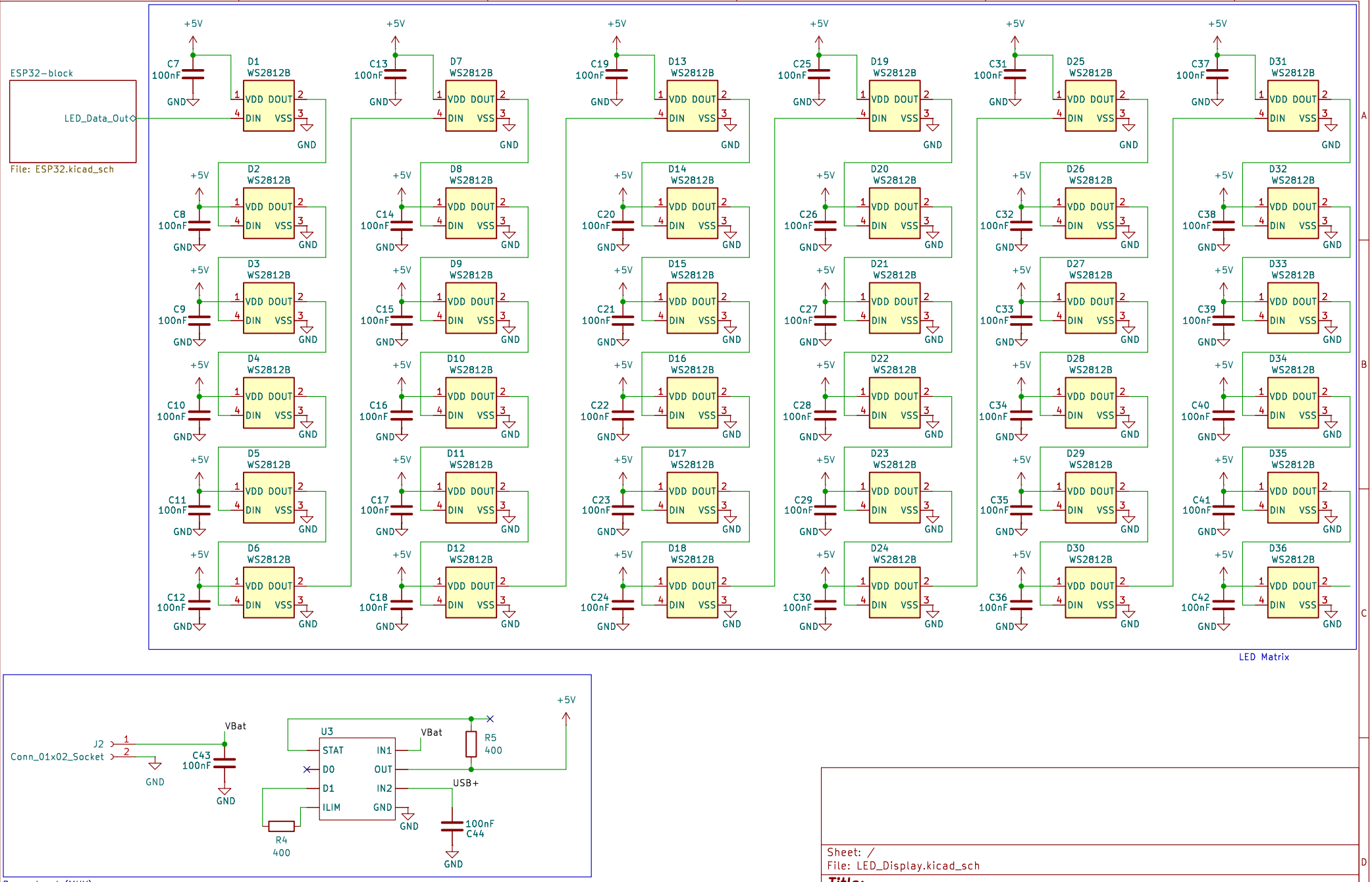

Sheet: /
File: LED_Display.kicad_sch

Title:

Size: A4	Date:	Rev:
KiCad E.D.A. 8.0.3		Id: 1/2

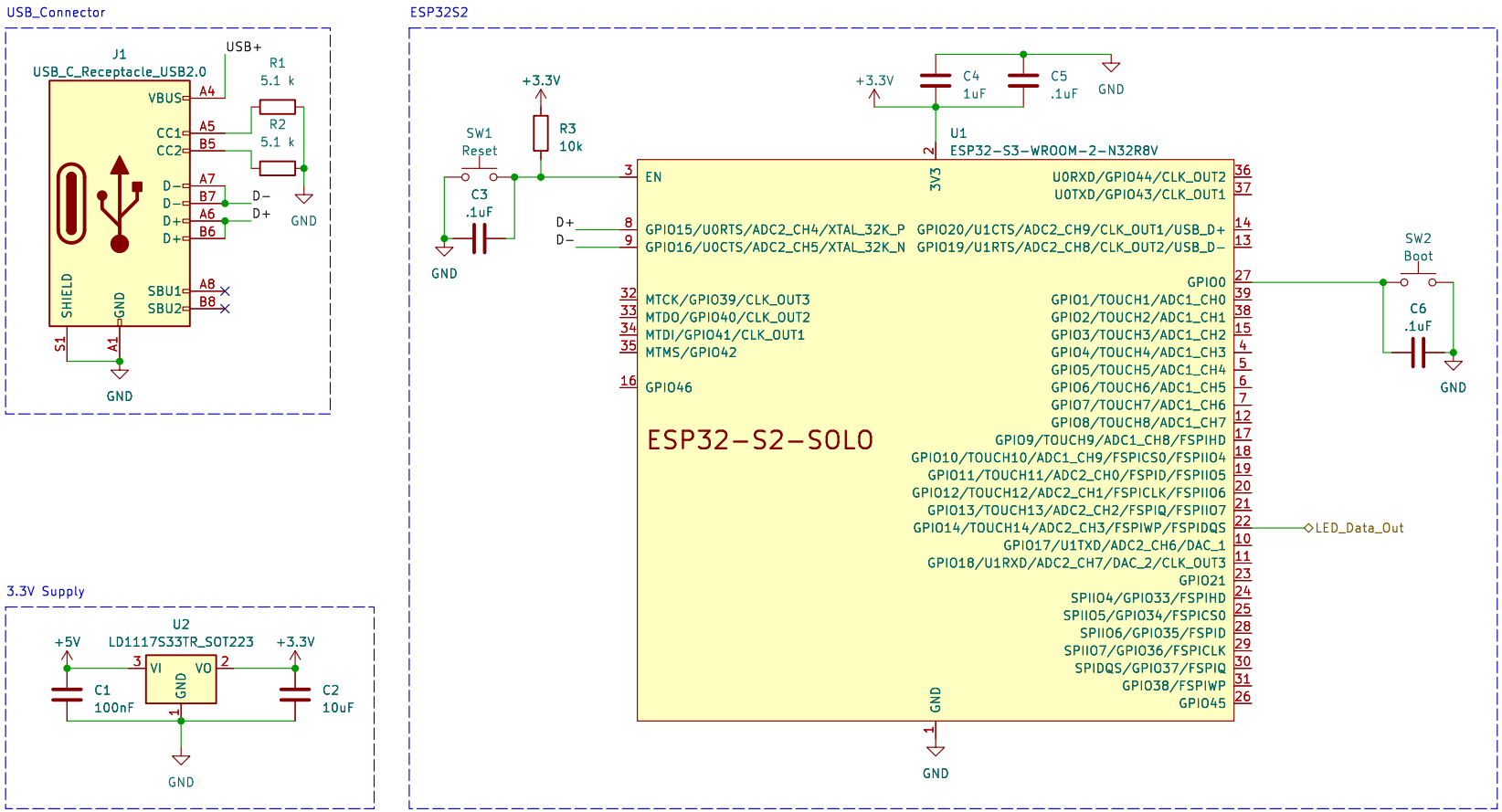

Sheet: /ESP32-block/
File: ESP32.kicad_sch

Title:

Size: A4	Date:	**Rev:**
KiCad E.D.A. 8.0.3		Id: 2/2