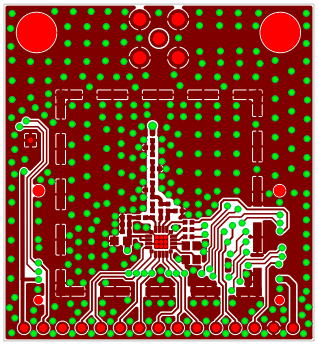

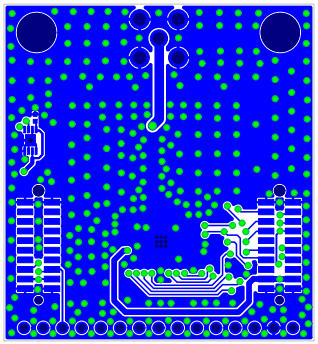

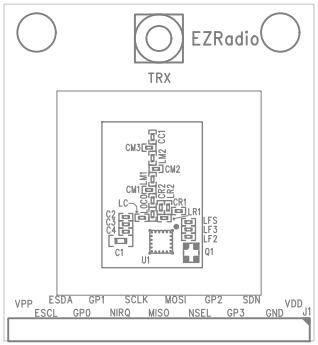
EZRadio
TRX
CM3
CC1
CM2
CM1
LC
C2
C3
C1
U1
LR1
LFS
LF3
LF2
Q1
VPP
ESDA
GP1
SCLK
MOSI
GP2
SDN
VDD
ESCL
GP0
NIRQ
MISO
NSEL
GP3
GND
J1

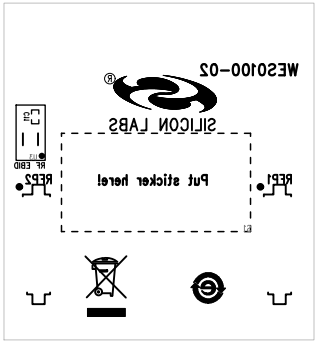
RF1
Put sticker here!
RF2
RF EBID
SILICON LABS
WES0100-02

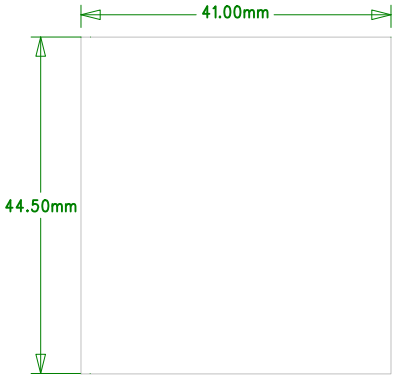
41.00mm
44.50mm