DVM Discovery

Hands-On & Flexible Learning of Digital Voltmeter Circuits

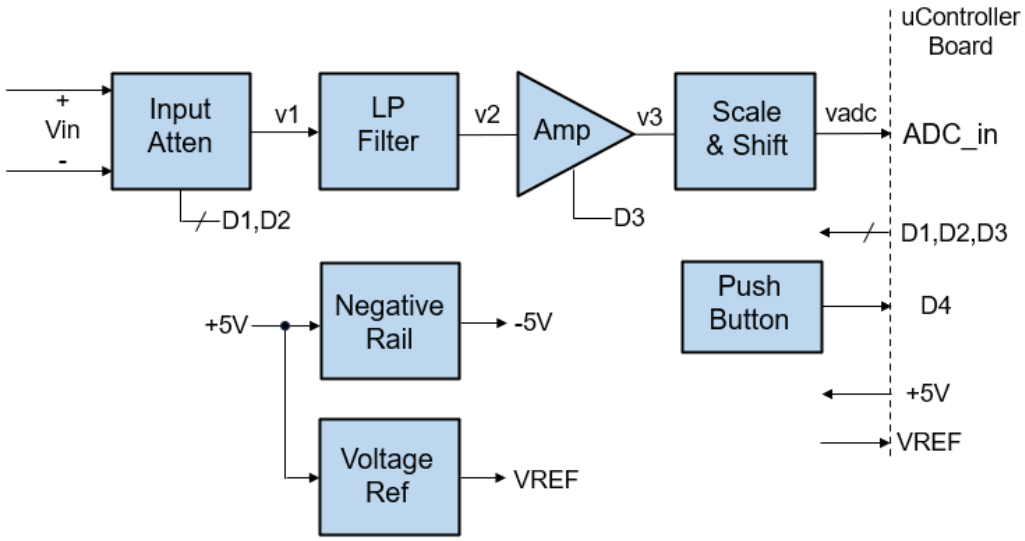

Contents

1 Intro 2
2 Overview 2
3 Block Diagram 3
4 Schematic 4
5 Voltage Range Setup 10
6 DVM Basic - 2 Ranges, Unipolar Input 11
7 DVM Advanced - 3 Ranges, Bipolar Input 13
8 Make it! 15
9 Bonus Sections 19

1 Intro

The DVM Discovery Board allows students, engineers and DIYers to quickly build and experiment with a variety of Digital Voltmeter Circuits. **Hands-on learning of real-world circuits boosts understanding and intuition**!

- Easy-to-use experimenter board
- Solderless headers allow quick component changes.
- Multiple circuit design options
  - *1 to 3 Customizable Voltage Ranges*
  - *Unipolar (pos input only) or Bipolar (pos/neg input)*
  - *Range Select: Manual or Auto*
  - *Precision Mode (voltage reference option)*
- Simple Interface to uController Boards (ex: Arduino UNO)
- Excel Toolkit calculates component values, ranges and resolution.

2 Overview

The DVM Discovery provides flexible circuitry for a multi-range voltmeter and easy uController interface. You can quickly build and explore many measurement options.

YELLOW boxes show solderless headers for easy component changes!

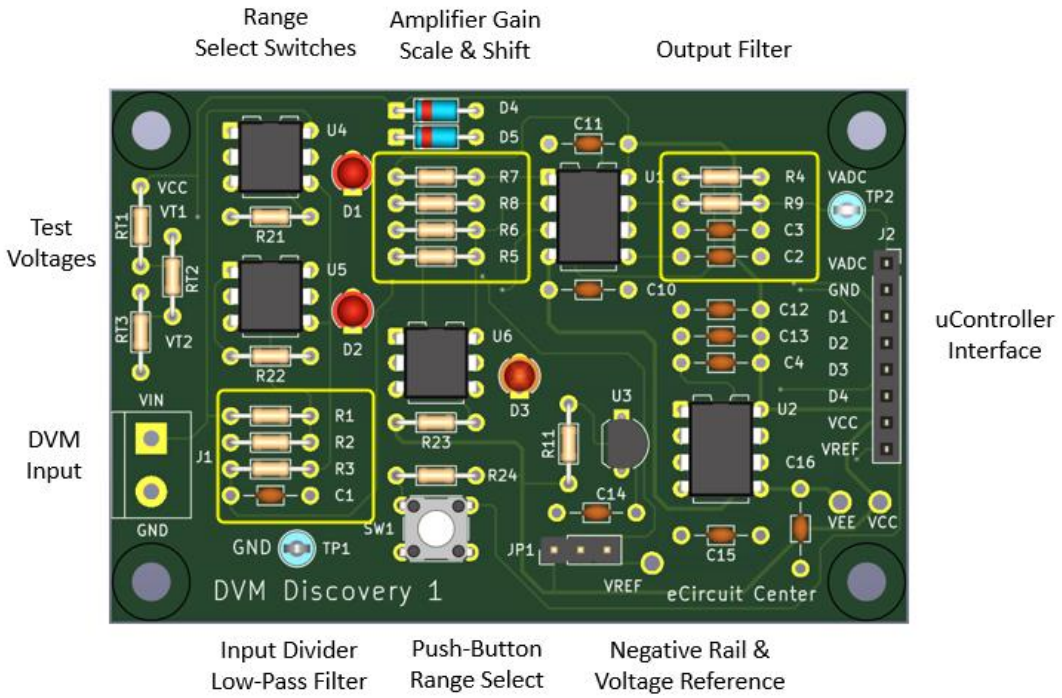

- Input Divider: Standard & High-Voltage Range option
- Amplifier: Low-Voltage Range option
- Negative Rail: Bipolar Input option
- Voltage Reference: Precision Mode option
- Push-Button Range Select
- LED Indicators - Digital Output Level

3 Block Diagram

The basic blocks allow for flexible build / design options. Customize for desired functionality as well as your learning goals.

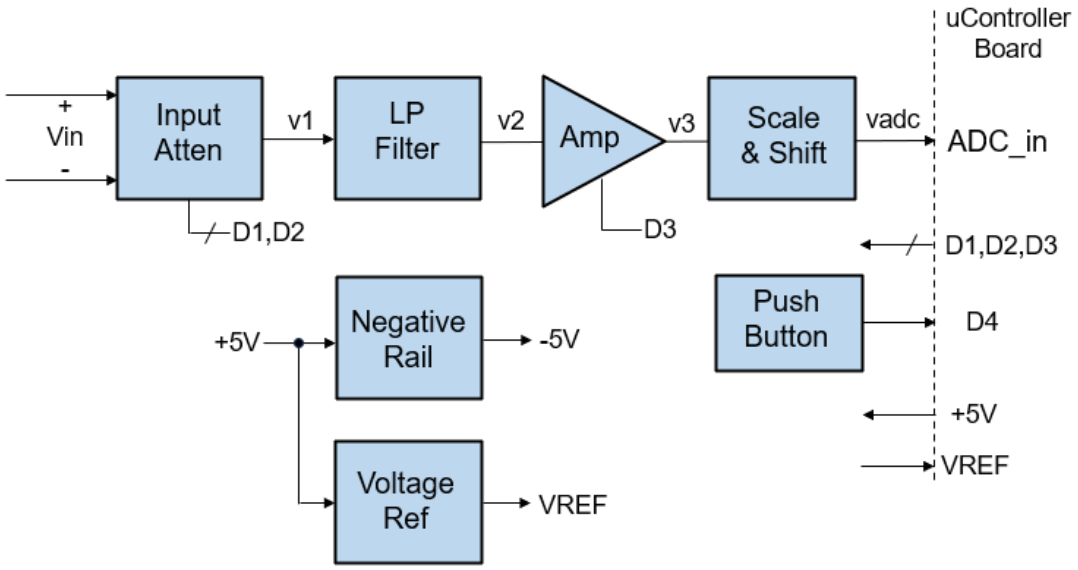

4 Schematic

The DVM Discovery is created using straightforward circuits and standard parts. They provide practical real-world applications of classic circuits. You can also deep dive into the theory of these foundational circuits as well.

4.1 Input Divider, Analog Mux, Low-Pass Filter

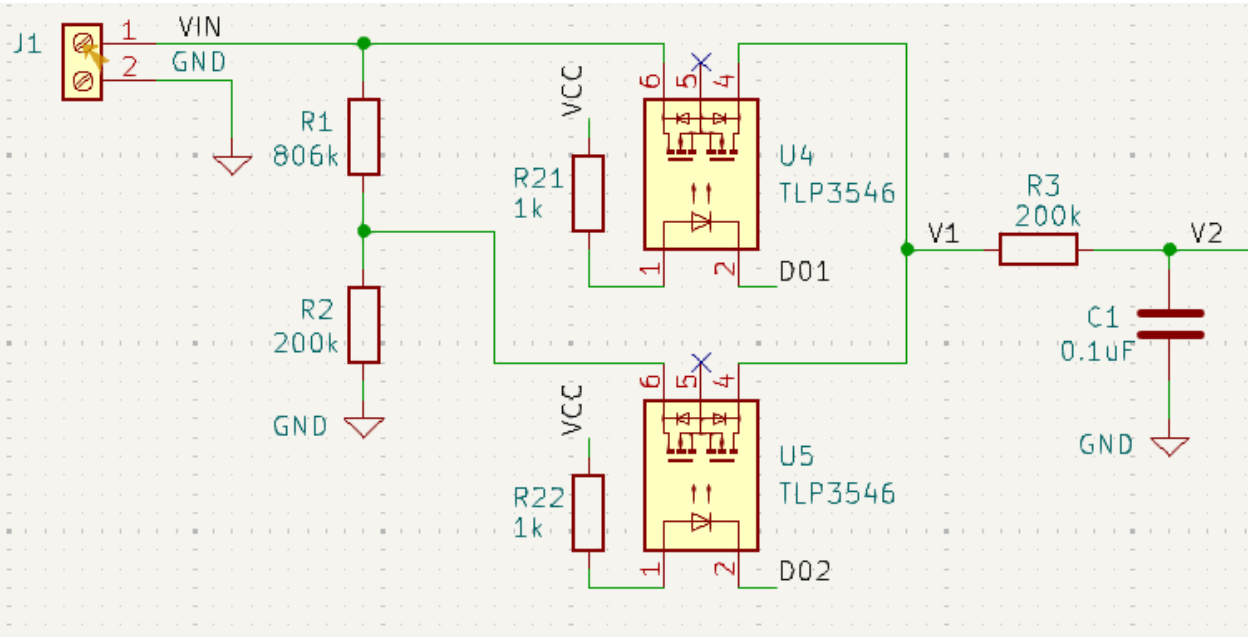

Input Voltage Divider

- The R1, R2 Divider scales down high voltages to the +5V max of the ADC input.
  Kdiv = V1 / Vin = R2 / (R1+R2)

Analog Mux

- Solid-State Relays U4 and U5 create an Analog Mux
  - Normal Voltage Range: U4 connects Vin directly to V1.
  - High Voltage Range: U5 connects the Divider tap to V1.

Low-Pass Filter

- R3, C1 create a low-pass filter: fc = 1 / (2 * pi* R3 * C1)
- Reduces unwanted 60Hz, radio interference and protects against input spikes.

4.2 Amplifier with Selectable Gain

You can configure U1 as a selectable gain amplifier or a unity-gain buffer.

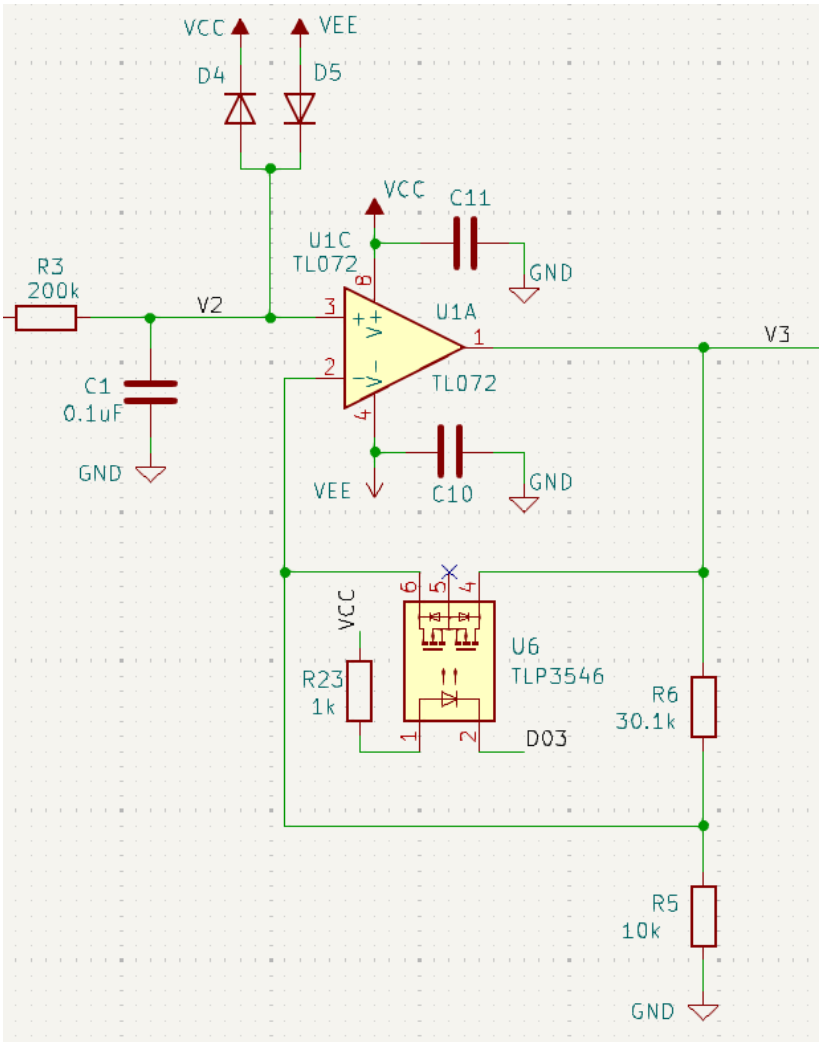

Selectable Gain Amplifier

- Unity Gain Amplifier - U6 Switch ON
  - U6 shorts U1 output to negative input.
- Gain Amplifier - U6 Switch OFF
  - Ka = V3 / V2 = R6 / R5 + 1

Unity-Gain Amplifier

- U6 not used.
- R5 = short (or < 100 ohms)
- R6 = open

Input Protection

- Schottky Diodes D4, D5 limit V2 to within VCC and VEE keeping U1's pins under their MAX voltage input rating.

4.3 Scale & Shift, Buffer

You can scale and shift a bipolar input (-5V to 5V) to a unipolar one (0V to 5V) using a simple two resistor network R7, R8!

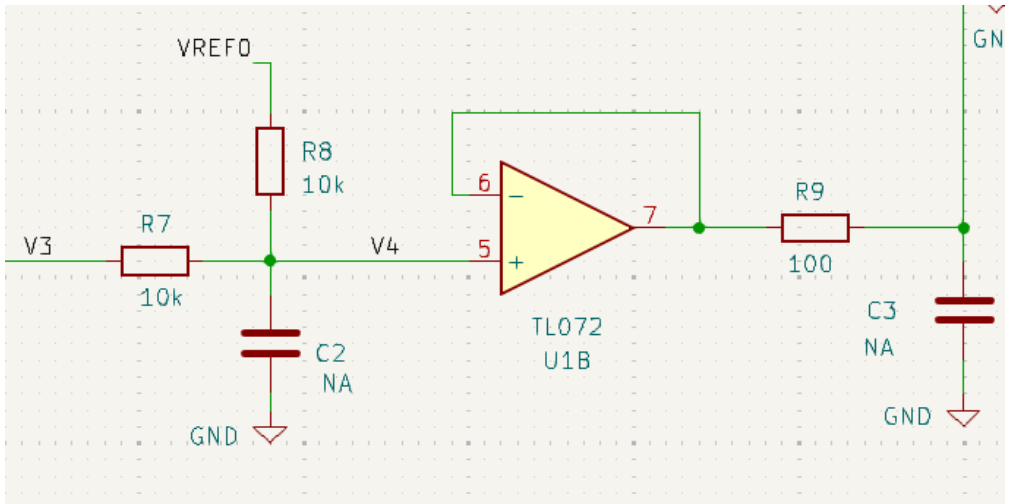

Scale and Shift

$$Kscale = \frac{V4}{V3} = \frac{R8}{R7 + R8}$$

$$Voffset = VREF0 \cdot \frac{R7}{R7 + R8}$$

Unipolar Input Mode – *No Scale or Shift*

- Input: V3 = 0 to 5V Range
- Output: V4 = 0 to 5V Range
  - R7 = 1k, R8 = open
  - Scale: Kscale = 1 (Unity Gain)
  - Shift: Voffset = 0V

Bipolar Input Mode - *Scale & Shift*

- Input: V3 = -5V to 5V Range
- Output: V4 = 0 to +5V Range
  - R7 = 10k, R8 = 10k, VREF0 = +5.0V
  - Scale: Kscale = R8 / (R7+R8) = 0.5
  - Shift: Voffset = Vref0 * R7 / (R7+R8) = +2.5V
  - V4 = V3*0.5 + 2.5V

Optional Low-Pass Filters

- R7||R8 and C2: fc = 1 / (2 * π * R7||R8 * C2)
- R9 and C3: fc = 1 / (2 * π * R10 * C3)

4.4 Buffer and External Interface

Output Buffer

- U1B buffers the medium impedance at node V4 and drives the Microcontroller's ADC input.
- R9 can provide isolation from capacitive load if driving long cables / wires to ADC input.
- C3 (and R9) can provide addition low-pass filtering.

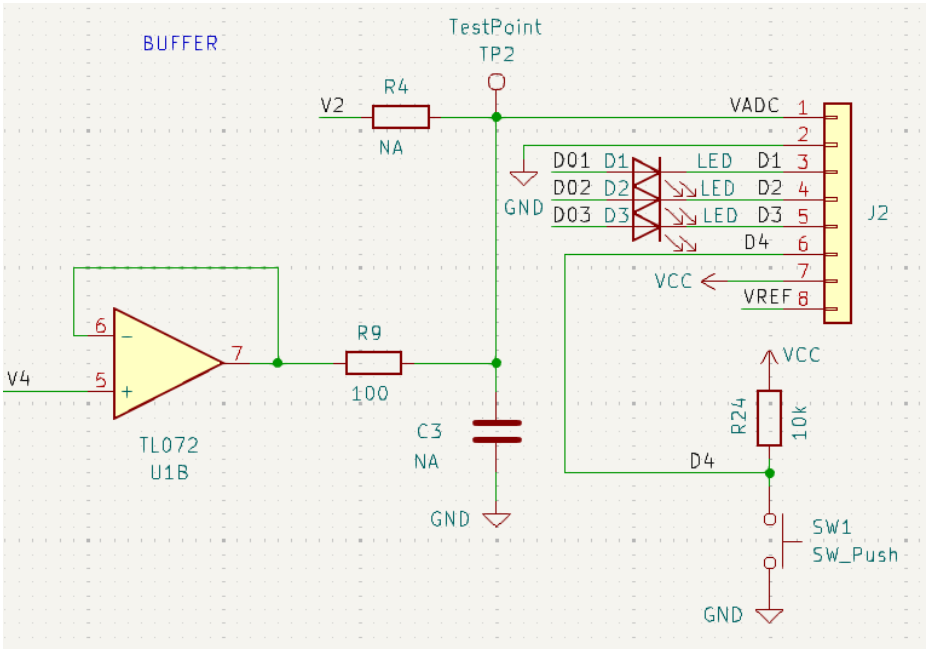

Microcontroller Interface

- Connector J2 allows easy access to external controller or computer.

Signals	Controller Signal	Description
VCC, GND	Power	Power for DVM PCB
D1, D2, D3	Digital Outputs	Solid-State Switch Control Low State – Turns ON U4, U5, U6
D4	Digital Input	Push-Button State for Range Select.
ADC	Analog Input A0	Voltmeter Reading
VREF	Analog Input (A1)	Reference Voltage for Precision Mode

Pushbutton

- SW1 for external input to manually select Vrange.

LED Indicators - Digital LO & Switch ON

- LEDs (D1,D2,D3) light up when digital outputs (D1,D2,D3) are driven **LO** turning Opto-Switches (U4,U5,U6) **ON**.

4.5 Negative Rail

You'll need a negative supply to power U1 for bipolar inputs.

- U2 is a Switched-Capacitor Converter that creates a negative voltage (VEE) from a positive input voltage (VCC).
- U2's internal switches alternatively charge C15 to VCC then deliver the charge to C16.

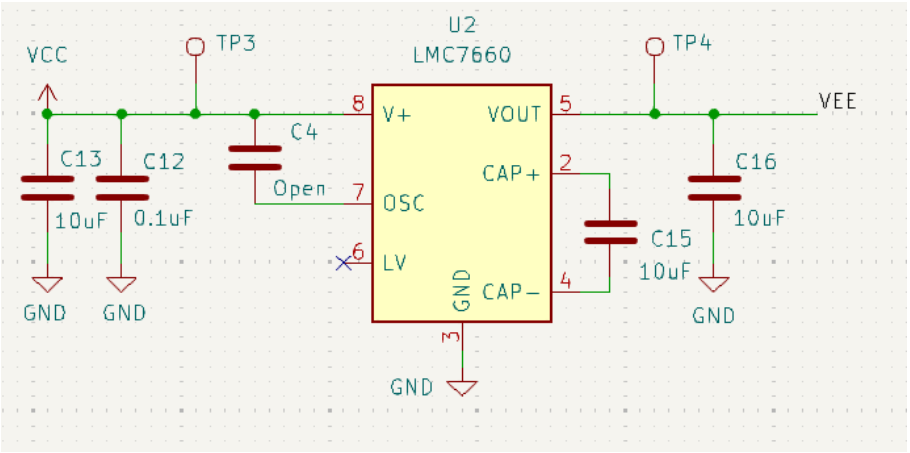

4.6 Voltage Reference

A precise voltage reference enables you to measure in Precision Mode.

- U7 is an IC that behaves like a precision 2-terminal Zener Diode.

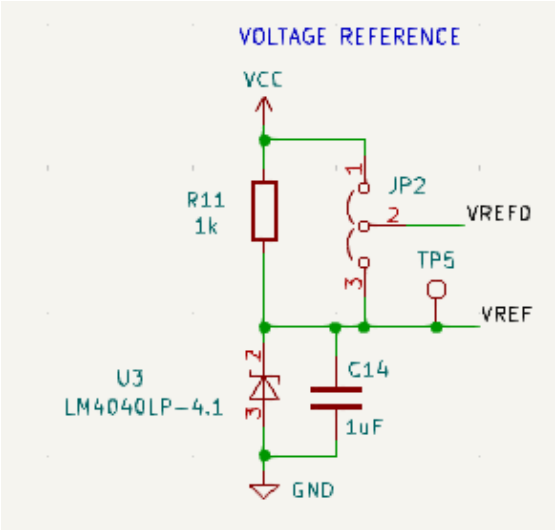

- VREF0 drives the Scale and Shift Network
  - VREF0 = VCC = +5V (JP1: 1-2)
  - VREF0 = VREF = +4.096V (JP1: 2-3)

Precision Mode Options

1. Connect VREF to an ADC input.
   You can measure this precision voltage and apply a Gain correction to all VIN readings.

2. Connect VREF directly to the Vref pin of the controller's ADC.
   The ADC automatically scales the measurements to this reference.

4.7 Input Test Levels

A simple resistor string provides 3 handy on-board voltages for testing multiple ranges. For RT1 = RT2 = 10k and RT3 = 1k you get the following levels.

- VCC = +5V Supply.
- VT1 = VCC * (RT2+RT3) / (RT1+RT2+RT3)
  = 2.619V
- VT2 = VCC * (RT3) / (RT1+RT2+RT3)
  = 0.238V

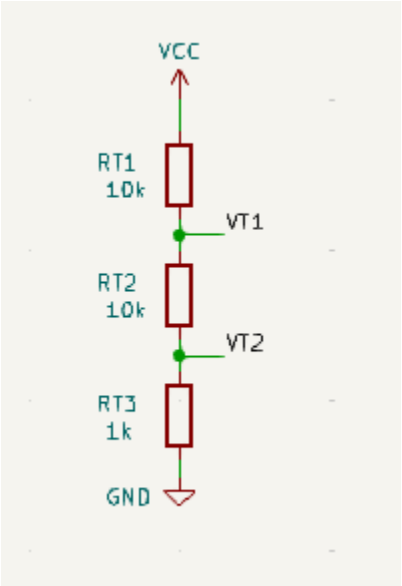

Create any two test voltages that you might need!

5 Voltage Range Setup

5.1 Ranges (Default)

Range	Vrange	Vrange Max	Overrange (%)
Standard	4V	5V	25%
High	20V	25V	25%
Low	1V	1.25V	25%

5.2 Voltage Range, Gains and Digital Outputs

Voltage Range	Divider Gain	Amplifier Gain	Analog Switches	Digital Outputs
Standard	1.0	1.0	U4 = ON U6 = ON	D1 = LO D3 = LO
High	R2 / (R1+R2)	1.0	U5 = ON U6 = ON	D2 = LO D3 = LO
Low	1.0	R6 / R5 + 1	U4 = ON	D1 = LO

NOTE: LED's D1, D2, D3 turn ON when digital outputs D1, D2, D3 go LO!

5.3 Signal Levels

Polarity	VIN	V4	VADC
Unipolar	0V to +Vrange_max	0V to +5V	0V to +5V 0V at VIN = 0
Bipolar	-Vrange_max to +Vrange_max	-5V to +5V	0V to +5V 2.5V at VIN = 0

5.4 Software Calculation of VIN

Polarity	VIN	Ktot	Calc VIN from ADCword
Unipolar	0 to +Vrange_max	Kdiv*Kamp	VIN = (ADCword / 1024 * VREF) / Ktot
Bipolar	-Vrange_min to +Vrange_max	Kdiv*Kamp*Kscale	VIN = (ADCword / 1024 * VREF – VREF / 2) / Ktot

6 DVM Basic - 2 Ranges, Unipolar Input

Let's take our DVM for a test drive! Build this voltmeter to get some hands-on experience with multi-ranges. You'll get to apply some real-world testing of your household batteries.

Description

- Ranges: +4V, +20V
- Input: Unipolar (Pos input only)
- Range Select: Manual Push-Button
- Low-Pass Filter: 8 Hz
- Overrange: 25% (+5V, +25V)

Install Components (See ***DVM Basic*** in Make it! Section)

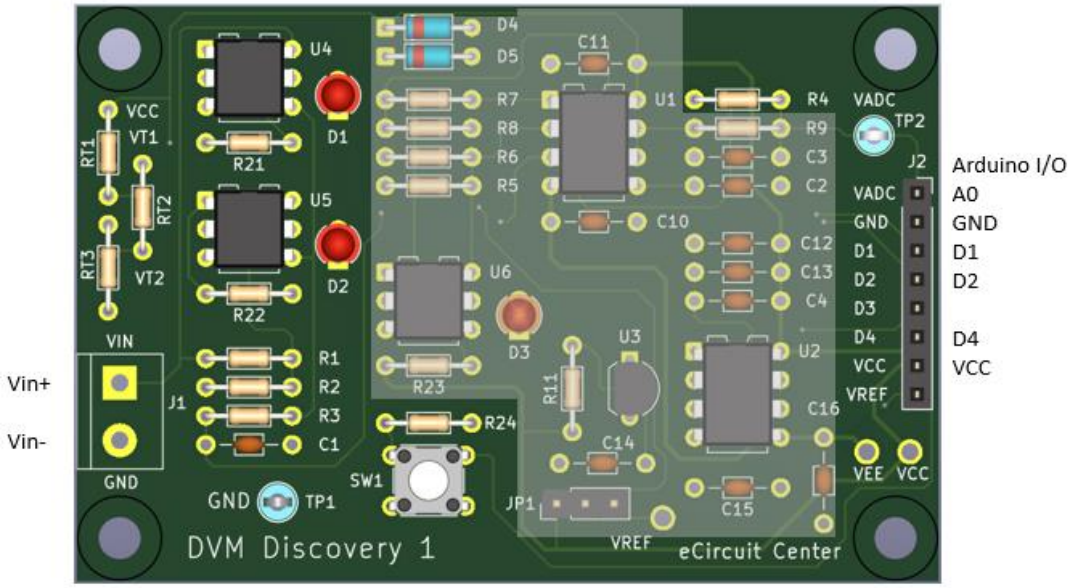

Install Components on 4-Pin Solderless Headers

- R1 = 825k, R2 = 200k (Input Divider)
- R3 = 200k, C1 = 0.1uF (Low-Pass Filter)
- R4 = 1k (connect to VADC)

Option: Solder components above directly on PCB without headers.

Connect Arduino UNO to DVM Discovery

Arduino	*Description*	*Discovery*	*Description*
A0	Analog ADC Input	VADC	Measured Voltage Signal
D11, D12	Digital Outputs	D1, D2	Opto-Switch Control and LEDs
D4	Digital Input	D4	Push-Button Logic State
+5V, GND	Power	VCC, GND	Power for Switches, Amp, etc.

Check Out

- Connect Arduino USB to PC or Laptop
- Use a DVM to verify +5.0V between Testpoints VCC and GND.

Run Code

- Download the file: *DVM_discovery_basic_1.ino*
- Start the Arduino IDE and Open the file listed above.
- Hit the Upload and Run buttons.
- Press pushbutton repeatedly and verify that LEDs D1 and D2 alternately turn ON and OFF.

Test Voltage

- Press the push-button to select the 4V Range.
  LEDs: D1 = ON, D2 = OFF
- Connect the VIN Test Clip (RED) to VT1 (2.69V).
- Read voltage at Arduino Serial Monitor on the PC screen.
- Very the reading is within +/-0.05V
- Press the push button to select the 20V Range.
  LEDs: D1 = OFF, D2 = ON
- Read voltage.
- Very the reading is within +/-0.1V

Test 1.5V and 9V Batteries

- Connect a 1.5V or 9V battery's + and -leads to VIN and GND.
- Select the 4V or 20V Range.
- Check 1.5V health - between 1.1V and 1.5V
- Check 9V health - between 7.5V and 9V.

7 DVM Advanced - 3 Ranges, Bipolar Input

Let's extend the capabilities of our DVM to 3 Voltage Ranges and measure both +/- input polarities!

Description

- Ranges: ±1V, ±4V, ±20V
- Input: Bipolar (Pos & Neg Voltages)
- Range Select: Manual Push-Button
- Low-Pass Filter: 8 Hz
- Overrange: 25% (±1.25V, ±5V, ±25V)

Install Components (See ***DVM Advanced*** in Make it! Section)

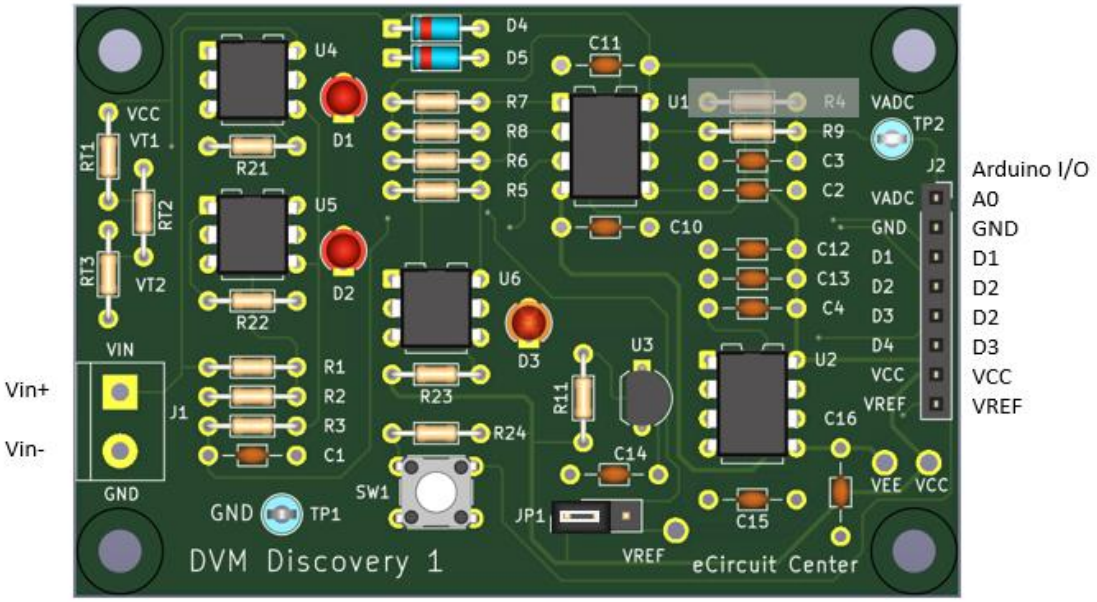

Install Components on 4-Pin Solderless Headers

- R1 = 825k, R2 = 200k (Input Divider)
- R3 = 200k, C1 = 0.1uF (Low-Pass Filter)
- R5 = 10k, R6 = 30.1k (Amplifier)
- R7 = 10k, R8 = 10k (Scale and Shift)
- R9 = 1k (connect to VADC)

Option: Solder components above directly on PCB without headers!

Jumpers

- JP1:1-2 (VREF0 = +5V)

Connect Arduino UNO to DVM Discovery

Arduino	*Description*	*Discovery*	*Description*
A0	Analog ADC Input	VADC	Measured Voltage Signal
D11, D12, D13	Digital Outputs	D1, D2, D3	Opto-Switch Control and LEDs
D4	Digital Input	D4	Push-Button Logic State
+5V, GND	Power	VCC, GND	Power for Switches, Amp, etc.

Check Out

- Connect Arduino USB to PC or Laptop
- Use a DVM to verify +5.0V between Testpoints VCC and GND.
- Verify -5.0V between VEE and GND.
- Verify +4.906V between VREF and GND.

Run Code

- Download the file: *DVM_discovery_3range_bipolar_1.ino*
- Start the Arduino IDE and Open the file listed above.
- Hit the Upload and Run button.
- Press pushbutton repeatedly and verify that LEDs D1, D2, D2 turn ON and OFF.

4V Range

- Press the push-button to select the 4V Range.
  LEDs: D1 = ON, D2 = OFF, D3 = ON
- Connect the VIN Test Clip (RED) to VT1 (2.619V).
- Read voltage at Arduino Serial Monitor on the PC screen.
- Verify the reading is within +/-0.05V

20V Range

- Press the push button to select the 20V Range.
  LEDs: D1 = OFF, D2 = ON, D3 = ON
- Connect the VIN Test Clip (RED) to VT1 (2.619V).
- Verify the reading is within +/-0.1V

1V Range

- Press the push button to select the 1V Range.
  LEDs: D1 = ON, D2 = OFF, D3 = OFF
- Connect the VIN Test Clip (RED) to VT2 (0.238V).
- Verify the reading is within +/-0.05V

8 Make it!

Here's the parts list for the Basic and Advanced DVMs.

- Modify and build for your own learning goals.
- Install only parts needed for your design.
- All Resistors: 1/4W, 5% unless noted.
- All Capacitors: Ceramic, >25V

8.1 DVM Basic - 2 Ranges, Unipolar Input

PASSIVES

R1	1	825k	1% for precision	Install group on 4-pin headers
R2	1	200k	1% for precision	
R3	1	200k		
C1	1	0.1uF		
R4	1	1k		Install group on 4-pin headers
R9	1	Open		
C3	1	Open		Optional low-pass filtering
C2	1	Open		Optional low-pass filtering
R21, R22	2	1k		
RT1, RT2	2	10k		
RT3	1	1k		
D4, D5	2	Diode	1N5711	
D1, D2	2	LED Yel	LTL-4253	Any color you prefer.

INTEGRATED CIRCUITS

U4, U5	2	Opto-Isolated Solid-State Switch	TLP592 type or equivalent	Ron < 10 ohms

HARDWARE

R1 - C1 R4 - C3	4	4-pin Socket Header for components	SSW-104-01-T-S	Install on both sides of component groups.
U4, U5	4	3-pin female break-away socket strip		Install on both sides for opto switches.
J2	1	8-pin Socket Header	SSW-108-01-T-S	
J1	1	2-pin Terminal Block screw type		Optional: Solder test leads (spring or alligator clips) directly to J1 pads.
TP1	1	TestPoint	5011	

8.2 DVM Advanced - 3 Ranges, Bipolar Input

PASSIVES

C10, C11, C12	3	0.1uF		All caps Ceramic, >25V
C13, C14, C15, C16	2	10uF		
R1	1	825k	1% for precision	Install group on 4-pin headers
R2	1	200k	1% for precision	
R3	1	200k		
C1	1	0.1uF		
R5	1	10k	1% for precision	Install group on 4-pin headers
R6	1	30.1k	1% for precision	
R7	1	10k	1% for precision	
R8	1	10k	1% for precision	
R4	1	Open		Install group on 4-pin headers
R9	1	1k		
C3	1	Open		Optional low-pass filtering
C2	1	Open		Optional low-pass filtering
R11, R21, R22, R23	4	1k		
RT1, RT2	2	10k		
RT3	1	1k		
D4, D5	3	Diode	1N5711	
D1, D2, D3	3	LED Yel	LTL-4253	Any color you prefer.

INTEGRATED CIRCUITS

U1	1	Op Amp	LMC6082IN/NOP8	Dual op amp, rail-to-rail output, +/-7.5V supply max, DIP
U2	1	Negative Rail Charge Pump	AD7660NP	
U3	1	Voltage Reference Shunt	LM4040xx	
U4, U5, U6	3	Opto-Isolated Solid-State Switch	TLP592 type or equivalent	Ron < 10 ohms

HARDWARE

R1 - C1 R5 - R8 R4 - C3	6	4-pin Socket Header for components	SSW-104-01-T-S	Install on both sides of component groups.
U1, U2	2	DIP-8 Socket	4808-3000-CP	
U4, U5, U6	6	3-pin female break-away socket strip		Install both sides for opto switches.
J2	1	8-pin Socket Header	SSW-108-01-T-S	
J1	1	2-pin Terminal Block screw type		Optional: Solder test leads (spring or alligator clips) directly to J1 pads.
JP1	1	3-pin Header	TSW-103-08-T-S	1 Shunts needed SNT-100-BK-T
TP1	1	TestPoint	5011	

9 Bonus Sections

9.1 Revision & Notes

DVM Discovery User's Guide: Rev 1a

The DVM Discovery provides real-world hands-on experiences to developing skills, understanding and intuition about measurement topologies.

Rick Faehnrich

https://www.linkedin.com/in/rick-faehnrich-2671a911/

9.2 Learning Styles

Dive in any way that propels your learning with Self-Directed or Guided Learning (or a combination of both).

- *Self-Directed Learning - Explore circuits entirely on your own.*
- *Guided Examples – Follow a walk-through of two DVM implementations:*
  - *2-Range, Unipolar Input*
  - *3 Range, Bipolar Input*
- *Mixed Mode - Get ideas from the Guided examples and follow-through on your own.*

9.3 Arduino Software

Here's the fast track steps of running a C program (sketch) on your Arduino Board.

- *Download and install the Arduino IDE Software.*
  https://www.arduino.cc/en/software
- *Connect UNO Board to your computer*
  https://docs.arduino.cc/hardware/uno-rev3/
- *Open the Arduino IDE Software.*
- *Select Board Name*
  Select UNO from drop down menu.
- *Copy the program (sketch) to your Arduino folder and Open it.*
  DVM_discovery_basic_1.ino
- *Click Compile Button*
  Generates executable code, checks for errors.
- *Click the Upload Button*
  Uploads compiled code into UNO and begins running.
- *Click the Serial Monitor*
  Window displays output from PrintSerial statement.

9.4 Excel DVM Design Calculator

A handy Design and Analysis Toolkit.
https://ecircuitcenter.com/DVM1/dvm-discovery.html

1. *Calculate gains, signal levels and ADC digital values.*
2. *Modify, customize for your own projects.*

Amplifier	
R5	10,000
R6	30,100
Kamp1	
Kamp2	4.010
V3	**4.010**

9.5 KiCAD Software

KiCad is a free and open-source software suite that provides a complete EDA toolset including schematic capture, PCB layout, 3D visualization, and circuit simulation.
https://www.kicad.org/

9.6 GitHub

The DVM Discovery Bd is an open-source project intended to make op amp learning as accessible and affordable as possible. You can down load the documentation and KiCAD project files at https://github.com/rick-ecircuit (*Available soon...*)

9.7 Feedback eCircuitCenter

Feedback on eCircuit Center

- ✓ How is the DVM Discovery Bd helpful for you?
- ✓ What needs clarity?
- ✓ Other comments, suggestions?

Send your thoughts on the feedback form at eCircuit Center.
https://ecircuitcenter.com/contact.htm

> ***eCircuit Center*** *strives to provide informal, hands-on and fun experiences that lead to a deeper, more intuitive understanding of circuit design and analysis.*

9.8 The Power of Play

- Key to analog success: *play, play, play with circuits!*
- Analog circuits appear more inviting (and less intimidating) when playing and tinkering.
- Learning and passion grow when you
  - Ask “what if” questions
  - Play with component values - *Predict the outcome!*
  - Small discoveries and learning fuel motivation and the joy of learning.