Farnell AN AVNET COMPANY Newark AN AVNET COMPANY element14

EN - For pricing and availability in your local country please visit one of the below links:

DE - Informationen zu Preisen und Verfügbarkeit in Ihrem Land erhalten Sie über die unten aufgeführten Links:

FR - Pour connaître les tarifs et la disponibilité dans votre pays, cliquez sur l'un des liens suivants:

PC817X2J000F PC817X3J000F PC817X4J000F

EN
This Datasheet is presented by the manufacturer

DE
Dieses Datenblatt wird vom Hersteller bereitgestellt

FR
Cette fiche technique est présentée par le fabricant

PC817X Series

DIP 4pin General Purpose Photocoupler

*4-channel package type is also available.
(model No. **PC847X Series**)

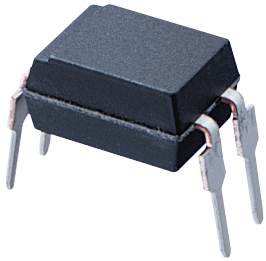

■ Description

PC817X Series contains an IRED optically coupled to a phototransistor.

It is packaged in a 4pin DIP, available in wide-lead spacing option and SMT gullwing lead-form option.

Input-output isolation voltage(rms) is 5.0kV.

Collector-emitter voltage is 80V(*) and CTR is 50% to 600% at input current of 5mA.

■ Features

1. 4pin DIP package
2. Double transfer mold package (Ideal for Flow Soldering)
3. High collector-emitter voltage (V_{CEO}:80V(*))
4. Current transfer ratio (CTR : MIN. 50% at I_F=5 mA, V_{CE}=5V)
5. Several CTR ranks available
6. High isolation voltage between input and output ($V_{iso(rms)}$: 5.0 kV)

(*) Up to Date code "P7" (July 2002) V_{CEO} : 35V.
From the production Date code "J5" (May 1997) to "P7" (July 2002), however the products were screened by BV_{CEO}≥70V.

■ Agency approvals/Compliance

1. Recognized by UL1577 (Double protection isolation), file No. E64380 (as model No. **PC817**)
2. Package resin : UL flammability grade (94V-0)

■ Applications

1. I/O isolation for MCUs (Micro Controller Units)
2. Noise suppression in switching circuits
3. Signal transmission between circuits of different potentials and impedances

Notice The content of data sheet is subject to change without prior notice.
In the absence of confirmation by device specification sheets, SHARP takes no responsibility for any defects that may occur in equipment using any SHARP devices shown in catalogs, data books, etc. Contact SHARP in order to obtain the latest device specification sheets before using any SHARP device.

Sheet No.: D2-A03101EN
Date Sep. 30. 2003
© SHARP Corporation

■ Internal Connection Diagram

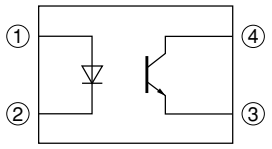

① Anode
② Cathode
③ Emitter
④ Collector

■ Outline Dimensions

(Unit : mm)

1. Through-Hole [ex. **PC817X**]

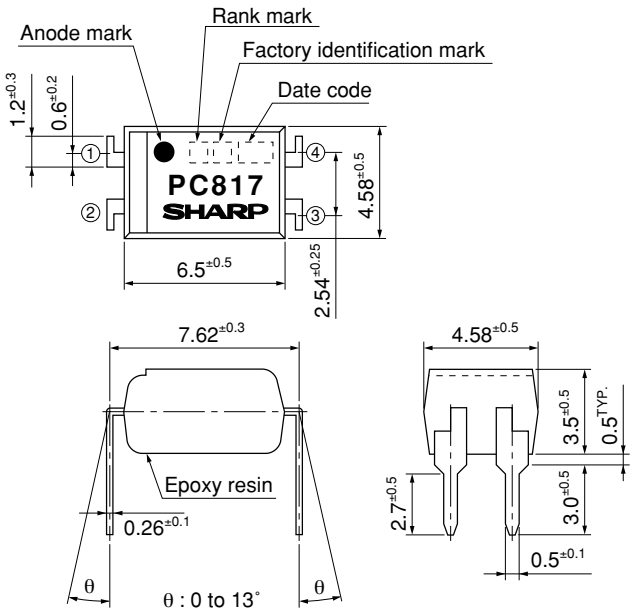

2. SMT Gullwing Lead-Form [ex. **PC817XI**]

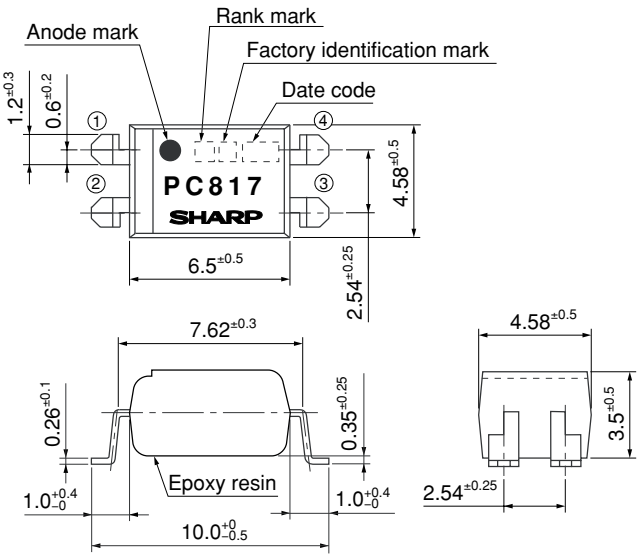

3. Wide Through-Hole Lead-Form [ex. **PC817XF**]

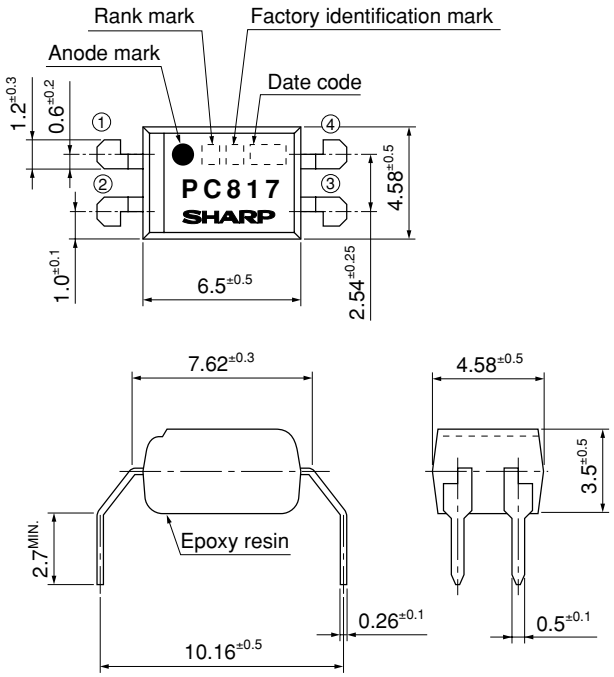

4. Wide SMT Gullwing Lead-Form [ex. **PC817XFP**]

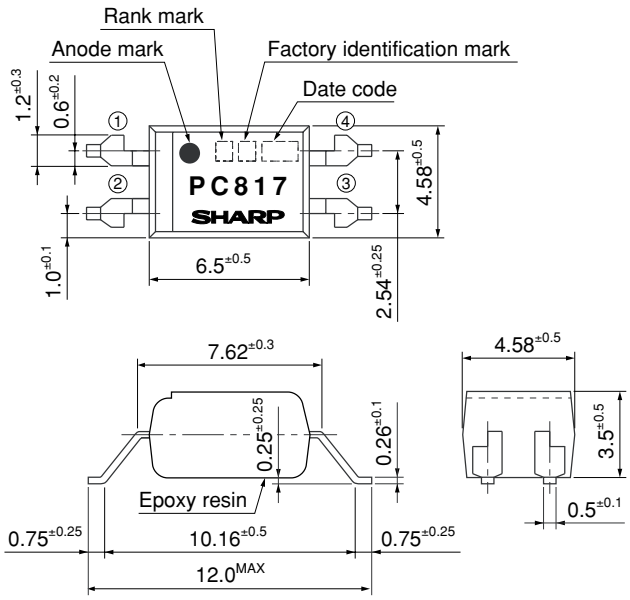

Product mass : approx. 0.21g

Date code (2 digit)

1st digit				2nd digit	
Year of production				Month of production	
A.D.	Mark	A.D	Mark	Month	Mark
1990	A	2002	P	January	1
1991	B	2003	R	February	2
1992	C	2004	S	March	3
1993	D	2005	T	April	4
1994	E	2006	U	May	5
1995	F	2007	V	June	6
1996	H	2008	W	July	7
1997	J	2009	X	August	8
1998	K	2010	A	September	9
1999	L	2011	B	October	O
2000	M	2012	C	November	N
2001	N	⋮	⋮	December	D

repeats in a 20 year cycle

Factory identification mark

Factory identification Mark	Country of origin
no mark	Japan
■	
◢	Indonesia
◸	Philippines
◥	China

* This factory marking is for identification purpose only.
Please contact the local SHARP sales representative to see the actural status of the production.

Rank mark

Refer to the Model Line-up table

■ Absolute Maximum Ratings

(T_a=25˚C)

	Parameter	Symbol	Rating	Unit
Input	Forward current	I_F	50	mA
	*1 Peak forward current	I_{FM}	1	A
	Reverse voltage	V_R	6	V
	Power dissipation	P	70	mW
Output	Collector-emitter voltage	V_{CEO}	*4 80	V
	Emitter-collector voltage	V_{ECO}	6	V
	Collector current	I_C	50	mA
	Collector power dissipation	P_C	150	mW
Total power dissipation		P_{tot}	200	mW
*2 Isolation voltage		$V_{iso\ (rms)}$	5.0	kV
Operating temperature		T_{opr}	−30 to +100	˚C
Storage temperature		T_{stg}	−55 to +125	˚C
*3 Soldering temperature		T_{sol}	260	˚C

*1 Pulse width≤100μs, Duty ratio : 0.001
*2 40 to 60%RH, AC for 1minute, f=60Hz
*3 For 10s
*4 Up to Date code "P7" (July 2002) V_{CEO} : 35V.

■ Electro-optical Characteristics

(T_a=25˚C)

	Parameter		Symbol	Conditions	MIN.	TYP.	MAX.	Unit
Input	Forward voltage		V_F	I_F=20mA	–	1.2	1.4	V
	Peak forward voltage		V_{FM}	I_{FM}=0.5A	–	–	3.0	V
	Reverse current		I_R	V_R=4V	–	–	10	μA
	Terminal capacitance		C_t	V=0, f=1kHz	–	30	250	pF
Output	Collector dark current		I_{CEO}	V_{CE}=50V, I_F=0	–	–	100	nA
	Collector-emitter breakdown voltage		BV_{CEO}	I_C=0.1mA, I_F=0	*5 80	–	–	V
	Emitter-collector breakdown voltage		BV_{ECO}	I_E=10μA, I_F=0	6	–	–	V
Transfer characteristics	Collector current		I_C	I_F=5mA, V_{CE}=5V	2.5	–	30.0	mA
	Collector-emitter saturation voltage		$V_{CE\ (sat)}$	I_F=20mA, I_C=1mA	–	0.1	0.2	V
	Isolation resistance		R_{ISO}	DC500V, 40 to 60%RH	5×10^{10}	1×10^{11}	–	Ω
	Floating capacitance		C_f	V=0, f=1MHz	–	0.6	1.0	pF
	Cut-off frequency		f_c	V_{CE}=5V, I_C=2mA, R_L=100Ω, −3dB	–	80	–	kHz
	Response time	Rise time	t_r	V_{CE}=2V, I_C=2mA, R_L=100Ω	–	4	18	μs
		Fall time	t_f		–	3	18	μs

*5 From the production Date code "J5" (May 1997) to "P7" (July 2002), however the products were screened by BV_{CEO}≥70V.

■ Model Line-up

Lead Form	Through-Hole	Wide Through-Hole	SMT Gullwing		Wide SMT Gullwing	Rank mark	I_C [mA] (I_F=5mA, V_{CE}=5V, T_a=25˚C)
Package	Sleeve			Taping			
	100pcs/sleeve			2 000pcs/reel			
Model No.	**PC817X**	**PC817XF**	**PC817XI**	**PC817XP**	**PC817XFP**	with or without	2.5 to 30.0
	PC817X1	**PC817XF1**	**PC817XI1**	**PC817XP1**	–	A	4.0 to 8.0
	PC817X2	**PC817XF2**	**PC817XI2**	**PC817XP2**	–	B	6.5 to 13.0
	PC817X3	**PC817XF3**	**PC817XI3**	**PC817XP3**	–	C	10.0 to 20.0
	PC817X4	**PC817XF4**	**PC817XI4**	**PC817XP4**	–	D	15.0 to 30.0
	PC817X5	**PC817XF5**	**PC817XI5**	**PC817XP5**	–	A or B	4.0 to 13.0
	PC817X6	**PC817XF6**	**PC817XI6**	**PC817XP6**	–	B or C	6.5 to 20.0
	PC817X7	**PC817XF7**	**PC817XI7**	**PC817XP7**	–	C or D	10.0 to 30.0
	PC817X8	**PC817XF8**	**PC817XI8**	**PC817XP8**	–	A, B or C	4.0 to 20.0
	PC817X9	**PC817XF9**	**PC817XI9**	**PC817XP9**	–	B, C or D	6.5 to 30.0
	PC817X0	**PC817XF0**	**PC817XI0**	**PC817XP0**	–	A, B, C or D	4.0 to 30.0

Please contact a local SHARP sales representative to inquire about production status and Lead-Free options.

Fig.1 Forward Current vs. Ambient Temperature

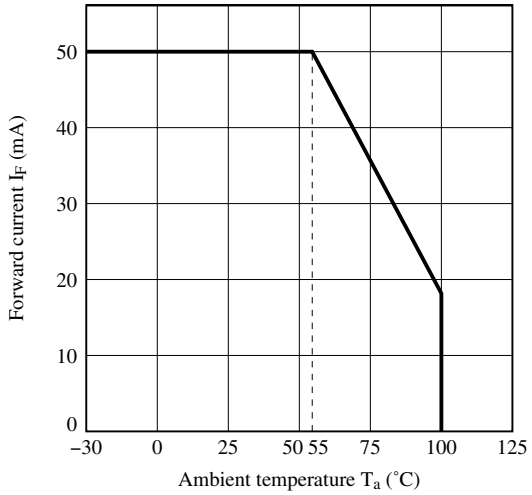

Fig.2 Diode Power Dissipation vs. Ambient Temperature

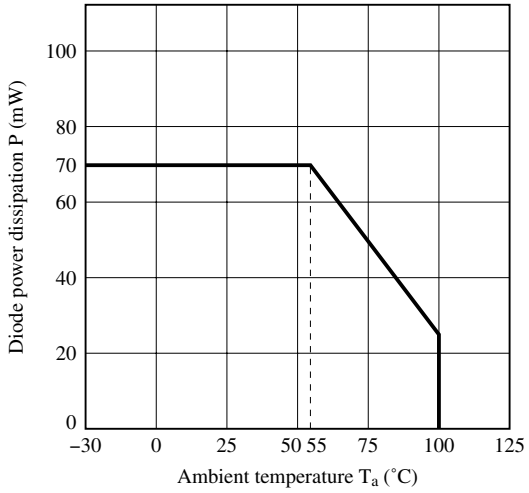

Fig.3 Collector Power Dissipation vs. Ambient Temperature

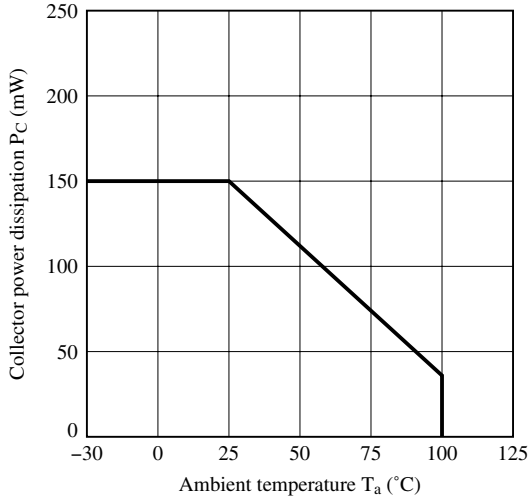

Fig.4 Total Power Dissipation vs. Ambient Temperature

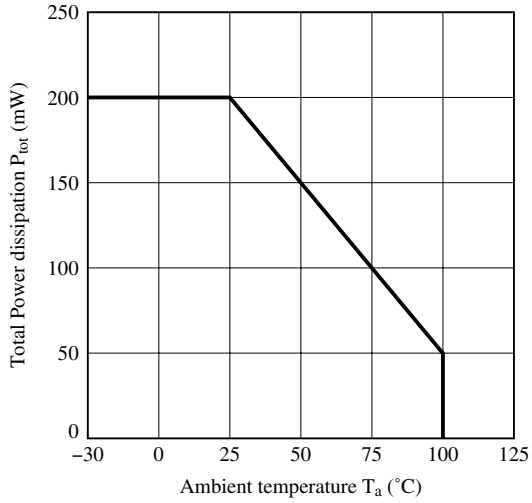

Fig.5 Peak Forward Current vs. Duty Ratio

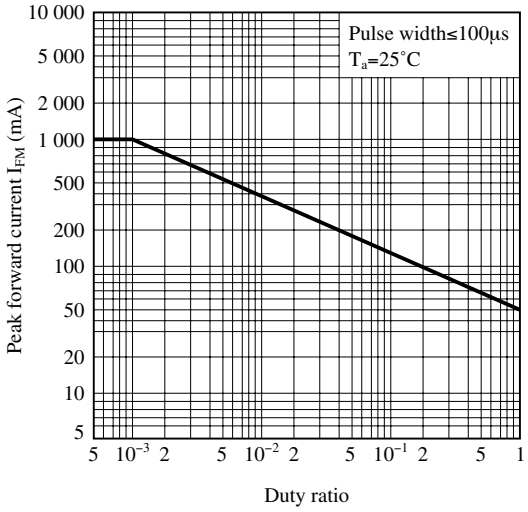

Fig.6 Current Transfer Ratio vs. Forward Current

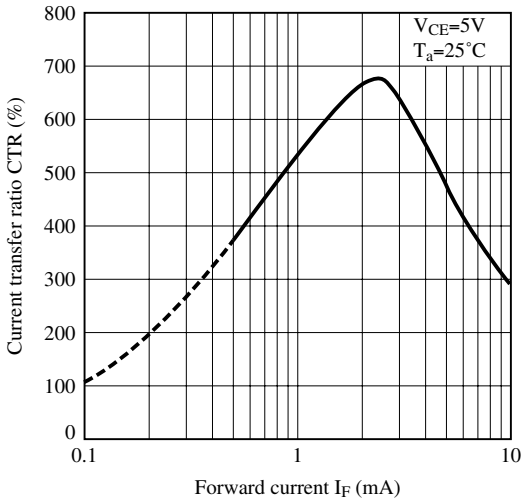

Fig.7 Forward Current vs. Forward Voltage

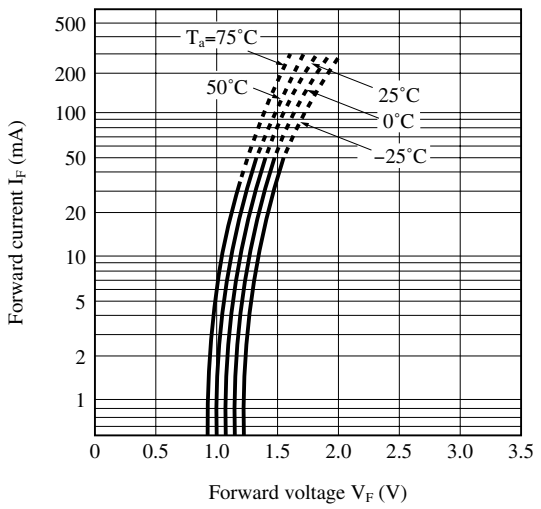

Fig.8 Collector Current vs. Collector-emitter Voltage

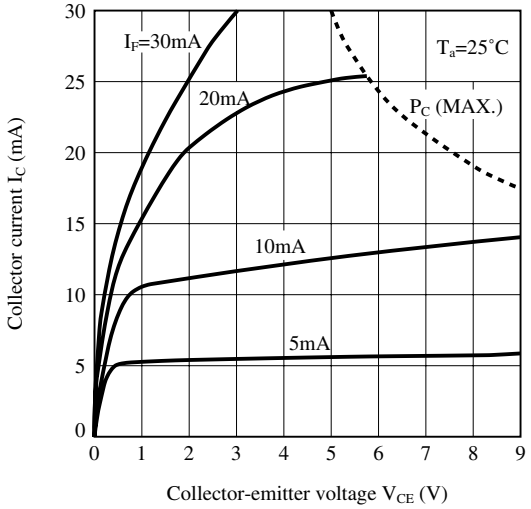

Fig.9 Relative Current Transfer Ratio vs. Ambient Temperature

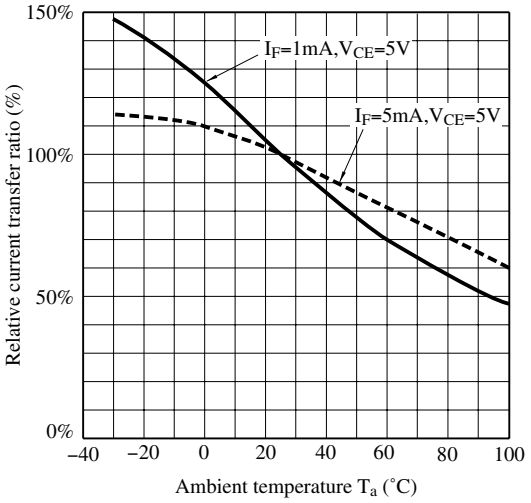

Fig.10 Collector - emitter Saturation Voltage vs. Ambient Temperature

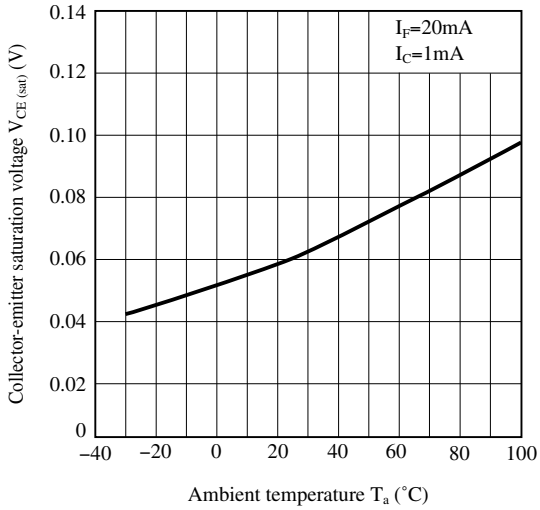

Fig.11 Collector Dark Current vs. Ambient Temperature

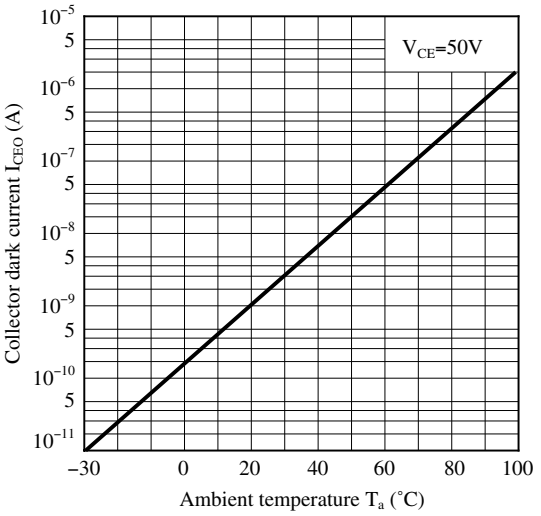

Fig.12 Collector-emitter Saturation Voltage vs. Forward Current

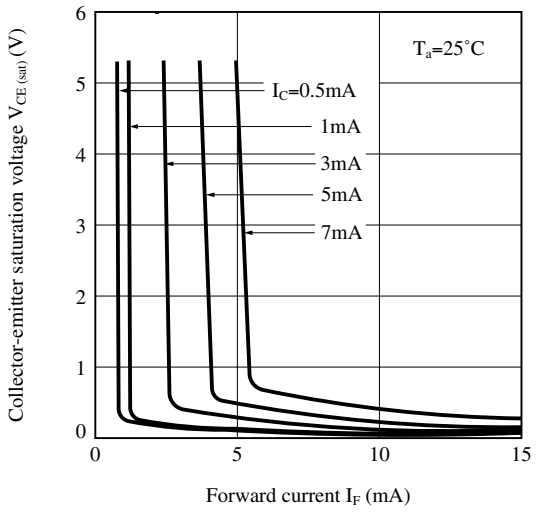

Fig.13 Response Time vs. Load Resistance

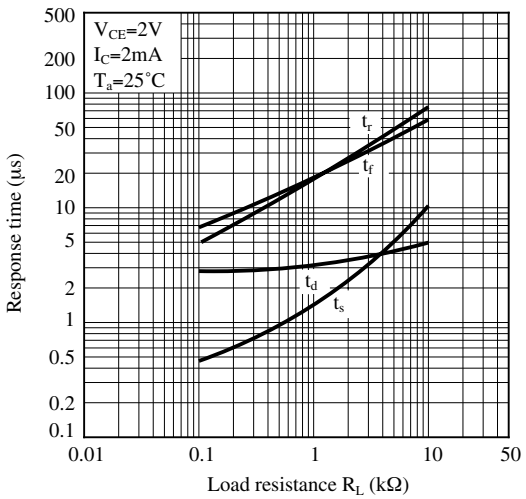

Fig.14 Test Circuit for Response Time

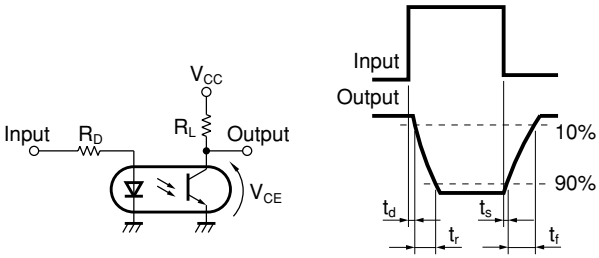

Please refer to the conditions in Fig.13.

Fig.15 Frequency Response

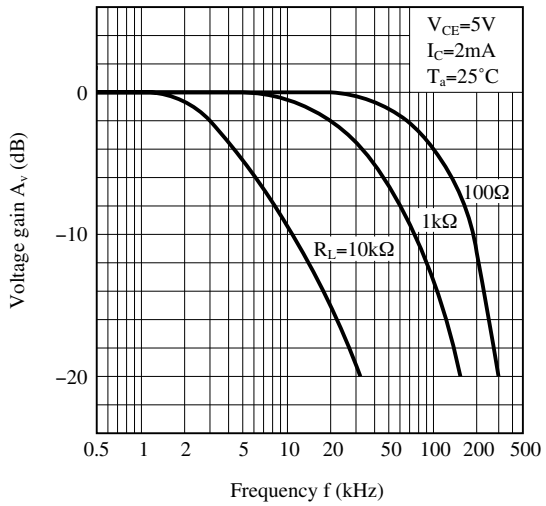

Fig.16 Test Circuit for Frequency Response

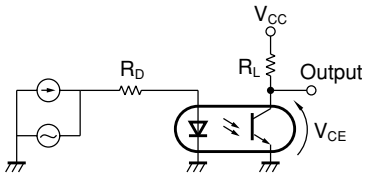

Please refer to the conditions in Fig.15.

Remarks : Please be aware that all data in the graph are just for reference and not for guarantee.

■ Design Considerations

● Design guide

While operating at I_F<1.0mA, CTR variation may increase.
Please make design considering this fact.

This product is not designed against irradiation and incorporates non-coherent IRED.

● Degradation

In general, the emission of the IRED used in photocouplers will degrade over time.
In the case of long term operation, please take the general IRED degradation (50% degradation over 5years) into the design consideration.

● Recommended Foot Print (reference)

SMT Gullwing Lead-form

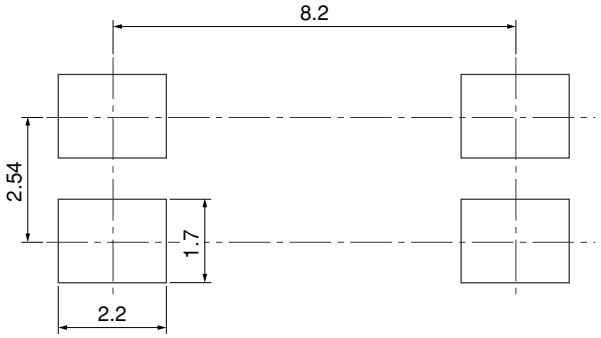

Wide SMT Gullwing Lead-form

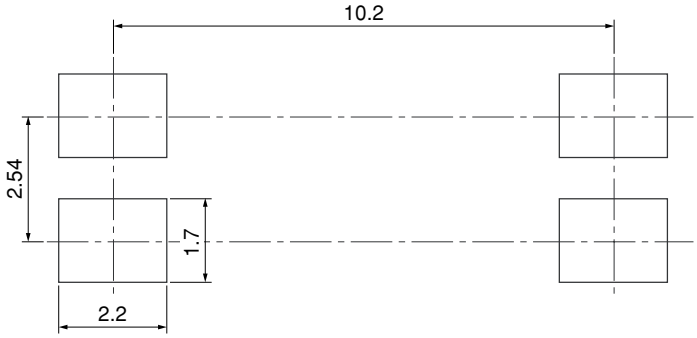

(Unit : mm)

☆ For additional design assistance, please review our corresponding Optoelectronic Application Notes.

■ Manufacturing Guidelines

● Soldering Method

Reflow Soldering:

Reflow soldering should follow the temperature profile shown below.
Soldering should not exceed the curve of temperature profile and time.
Please don't solder more than twice.

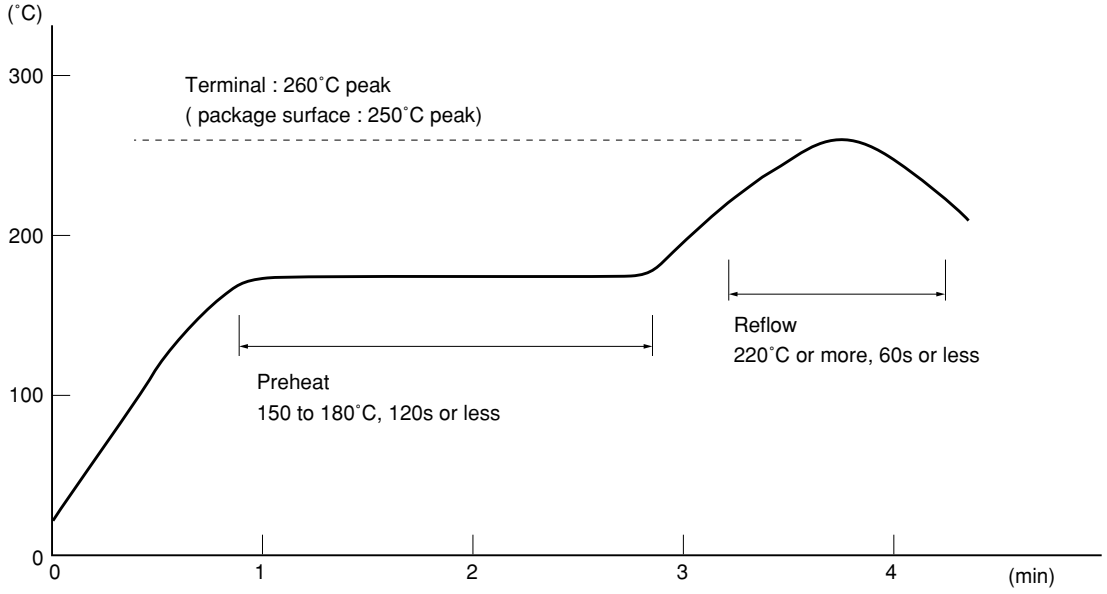

Flow Soldering :

Due to SHARP's double transfer mold construction submersion in flow solder bath is allowed under the below listed guidelines.

Flow soldering should be completed below 270˚C and within 10s.
Preheating is within the bounds of 100 to 150˚C and 30 to 80s.
Please don't solder more than twice.

Hand soldering

Hand soldering should be completed within 3s when the point of solder iron is below 400˚C.
Please don't solder more than twice.

Other notices

Please test the soldering method in actual condition and make sure the soldering works fine, since the impact on the junction between the device and PCB varies depending on the tooling and soldering conditions.

● Cleaning instructions

Solvent cleaning:

Solvent temperature should be 45˚C or below Immersion time should be 3minutes or less

Ultrasonic cleaning:

The impact on the device varies depending on the size of the cleaning bath, ultrasonic output, cleaning time, size of PCB and mounting method of the device.
Therefore, please make sure the device withstands the ultrasonic cleaning in actual conditions in advance of mass production.

Recommended solvent materials:

Ethyl alcohol, Methyl alcohol and Isopropyl alcohol
In case the other type of solvent materials are intended to be used, please make sure they work fine in actual using conditions since some materials may erode the packaging resin.

● Presence of ODC

This product shall not contain the following materials.
And they are not used in the production process for this device.
Regulation substances:CFCs, Halon, Carbon tetrachloride, 1.1.1-Trichloroethane (Methylchloroform)
Specific brominated flame retardants such as the PBBOs and PBBs are not used in this product at all.

■ Package specification

● Sleeve package

1. Through-Hole or SMT Gullwing Lead-Form

Package materials

Sleeve : HIPS (with anti-static material)
Stopper : Styrene-Elastomer

Package method

MAX. 100pcs of products shall be packaged in a sleeve.
Both ends shall be closed by tabbed and tabless stoppers.
The product shall be arranged in the sleeve with its anode mark on the tabless stopper side.
MAX. 20 sleeves in one case.

Sleeve outline dimensions

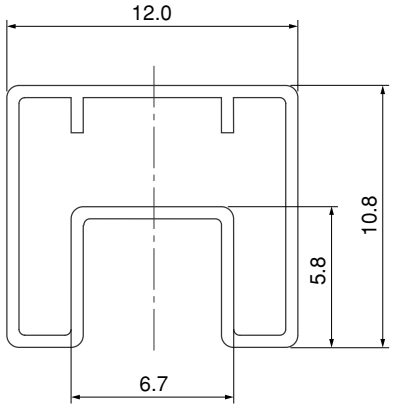

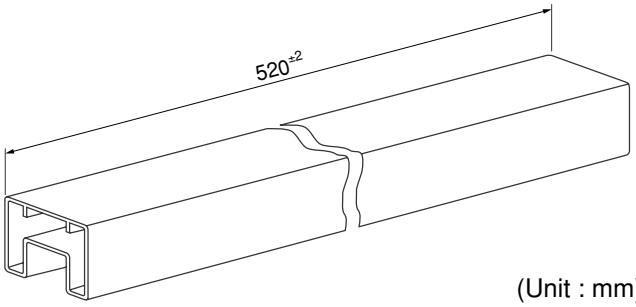

(Unit : mm)

2. Wide Through-Hole Lead-Form or Wide SMT Gullwing Lead-Form

Package materials

Sleeve : HIPS (with anti-static material)
Stopper : Styrene-Elastomer

Package method

MAX. 100pcs of products shall be packaged in a sleeve.
Both ends shall be closed by tabbed and tabless stoppers.
The product shall be arranged in the sleeve with its anode mark on the tabless stopper side.
MAX. 20 sleeves in one case.

Sleeve outline dimensions

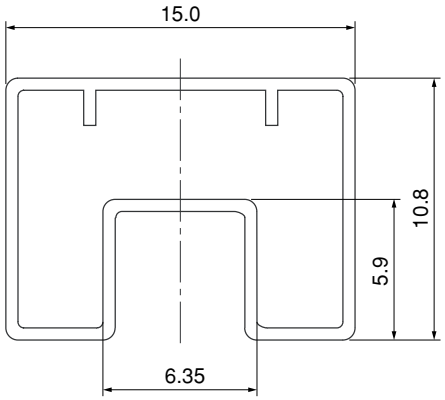

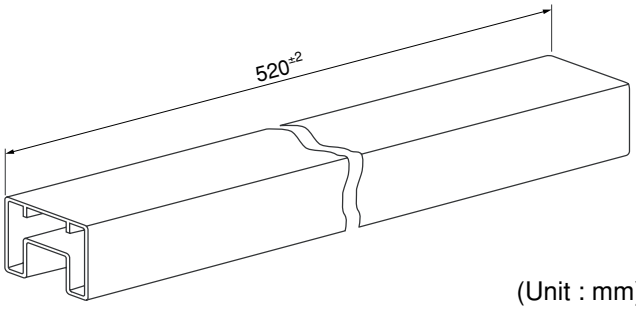

(Unit : mm)

● Tape and Reel package

1. SMT Gullwing

Package materials

Carrier tape : PS

Cover tape : PET (three layer system)

Reel : PS

Carrier tape structure and Dimensions

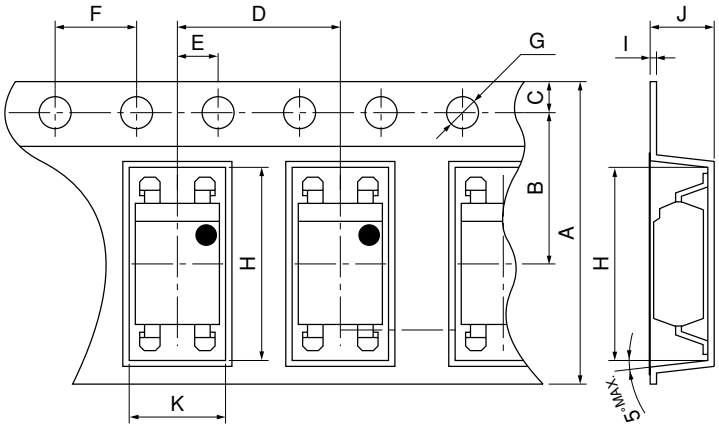

Dimensions List (Unit : mm)

A	B	C	D	E	F	G
$16.0^{\pm0.3}$	$7.5^{\pm0.1}$	$1.75^{\pm0.1}$	$8.0^{\pm0.1}$	$2.0^{\pm0.1}$	$4.0^{\pm0.1}$	$\phi1.5^{+0.1}_{-0}$
H	I	J	K			
$10.4^{\pm0.1}$	$0.4^{\pm0.05}$	$4.2^{\pm0.1}$	$5.1^{\pm0.1}$			

Reel structure and Dimensions

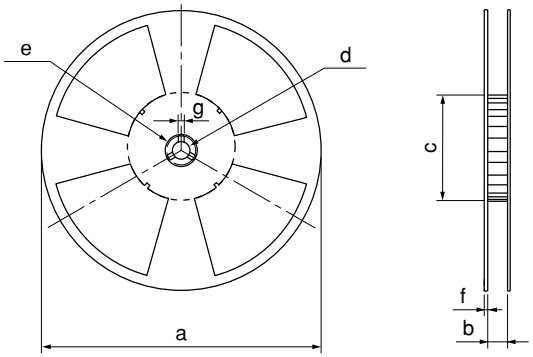

Dimensions List (Unit : mm)

a	b	c	d
330	$17.5^{\pm1.5}$	$100^{\pm1.0}$	$13^{\pm0.5}$
e	f	g	
$23^{\pm1.0}$	$2.0^{\pm0.5}$	$2.0^{\pm0.5}$	

Direction of product insertion

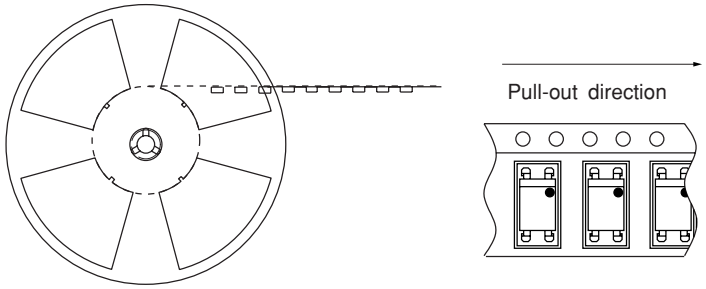

[Packing : 2 000pcs/reel]

2. Wide SMT Gullwing

Package materials

Carrier tape : PS

Cover tape : PET (three layer system)

Reel : PS

Carrier tape structure and Dimensions

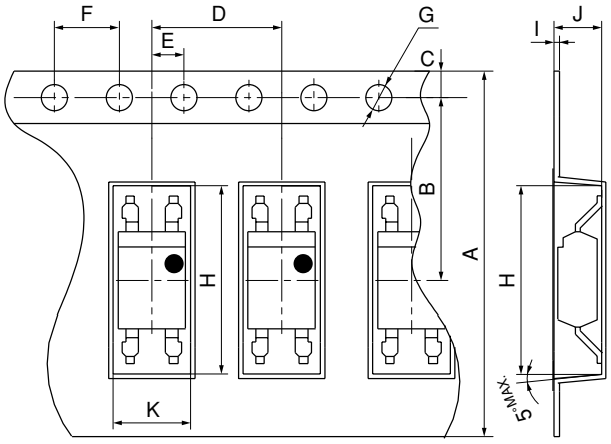

Dimensions List (Unit : mm)

A	B	C	D	E	F	G
$24.0^{\pm0.3}$	$11.5^{\pm0.1}$	$1.75^{\pm0.1}$	$8.0^{\pm0.1}$	$2.0^{\pm0.1}$	$4.0^{\pm0.1}$	$\phi1.5^{+0.1}_{-0}$
H	I	J	K			
$12.4^{\pm0.1}$	$0.4^{\pm0.05}$	$4.1^{\pm0.1}$	$5.1^{\pm0.1}$			

Reel structure and Dimensions

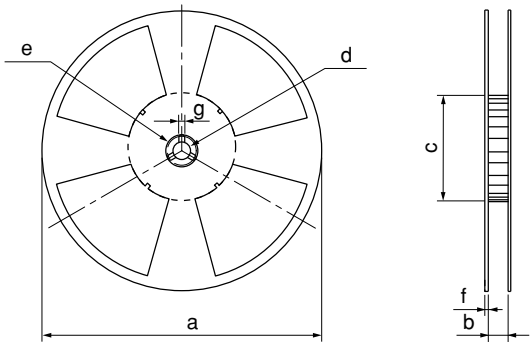

Dimensions List (Unit : mm)

a	b	c	d
330	$25.5^{\pm1.5}$	$100^{\pm1.0}$	$13^{\pm0.5}$
e	f	g	
$23^{\pm1.0}$	$2.0^{\pm0.5}$	$2.0^{\pm0.5}$	

Direction of product insertion

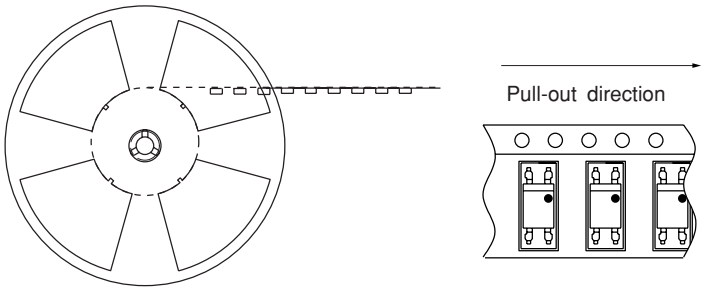

[Packing : 2 000pcs/reel]

■ Important Notices

· The circuit application examples in this publication are provided to explain representative applications of SHARP devices and are not intended to guarantee any circuit design or license any intellectual property rights. SHARP takes no responsibility for any problems related to any intellectual property right of a third party resulting from the use of SHARP's devices.

· Contact SHARP in order to obtain the latest device specification sheets before using any SHARP device. SHARP reserves the right to make changes in the specifications, characteristics, data, materials, structure, and other contents described herein at any time without notice in order to improve design or reliability. Manufacturing locations are also subject to change without notice.

· Observe the following points when using any devices in this publication. SHARP takes no responsibility for damage caused by improper use of the devices which does not meet the conditions and absolute maximum ratings to be used specified in the relevant specification sheet nor meet the following conditions:

(i) The devices in this publication are designed for use in general electronic equipment designs such as:

--- Personal computers
--- Office automation equipment
--- Telecommunication equipment [terminal]
--- Test and measurement equipment
--- Industrial control
--- Audio visual equipment
--- Consumer electronics

(ii) Measures such as fail-safe function and redundant design should be taken to ensure reliability and safety when SHARP devices are used for or in connection with equipment that requires higher reliability such as:

--- Transportation control and safety equipment (i.e., aircraft, trains, automobiles, etc.)
--- Traffic signals
--- Gas leakage sensor breakers
--- Alarm equipment
--- Various safety devices, etc.

(iii) SHARP devices shall not be used for or in connection with equipment that requires an extremely high level of reliability and safety such as:

--- Space applications
--- Telecommunication equipment [trunk lines]
--- Nuclear power control equipment
--- Medical and other life support equipment (e.g., scuba).

· If the SHARP devices listed in this publication fall within the scope of strategic products described in the Foreign Exchange and Foreign Trade Law of Japan, it is necessary to obtain approval to export such SHARP devices.

· This publication is the proprietary product of SHARP and is copyrighted, with all rights reserved. Under the copyright laws, no part of this publication may be reproduced or transmitted in any form or by any means, electronic or mechanical, for any purpose, in whole or in part, without the express written permission of SHARP. Express written permission is also required before any use of this publication may be made by a third party.

· Contact and consult with a SHARP representative if there are any questions about the contents of this publication.

Farnell AN AVNET COMPANY Newark AN AVNET COMPANY element14

EN - For pricing and availability in your local country please visit one of the below links:

DE - Informationen zu Preisen und Verfügbarkeit in Ihrem Land erhalten Sie über die unten aufgeführten Links:

FR - Pour connaître les tarifs et la disponibilité dans votre pays, cliquez sur l'un des liens suivants:

PC817X2J000F PC817X3J000F PC817X4J000F

EN
This Datasheet is presented by the manufacturer

DE
Dieses Datenblatt wird vom Hersteller bereitgestellt

FR
Cette fiche technique est présentée par le fabricant