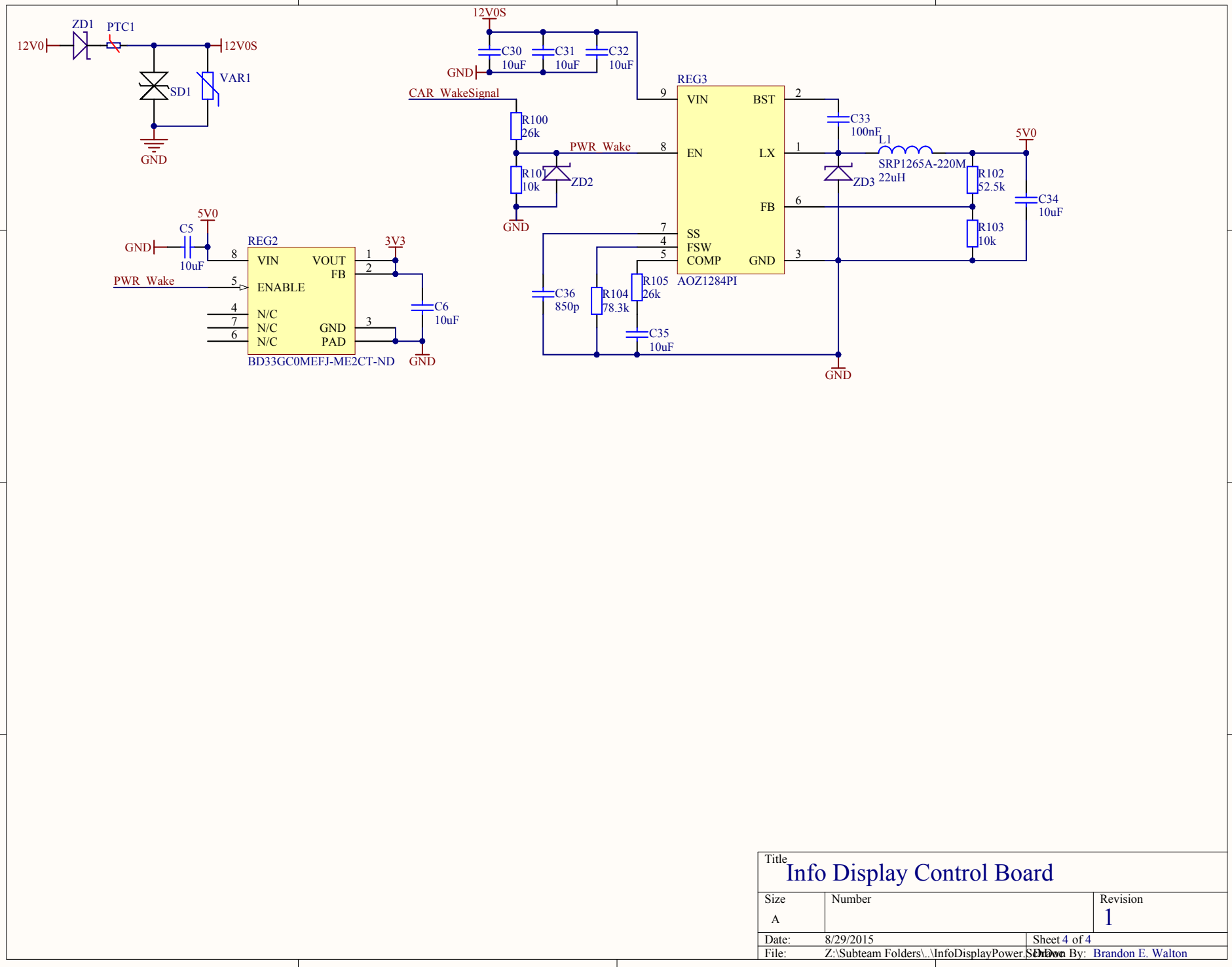

Title: Info Display Control Board		
Size: A	Number	Revision: 1
Date: 8/29/2015		Sheet 4 of 4
File: Z:\Subteam Folders\..\InfoDisplayPower.SchDoc		Drawn By: Brandon E. Walton