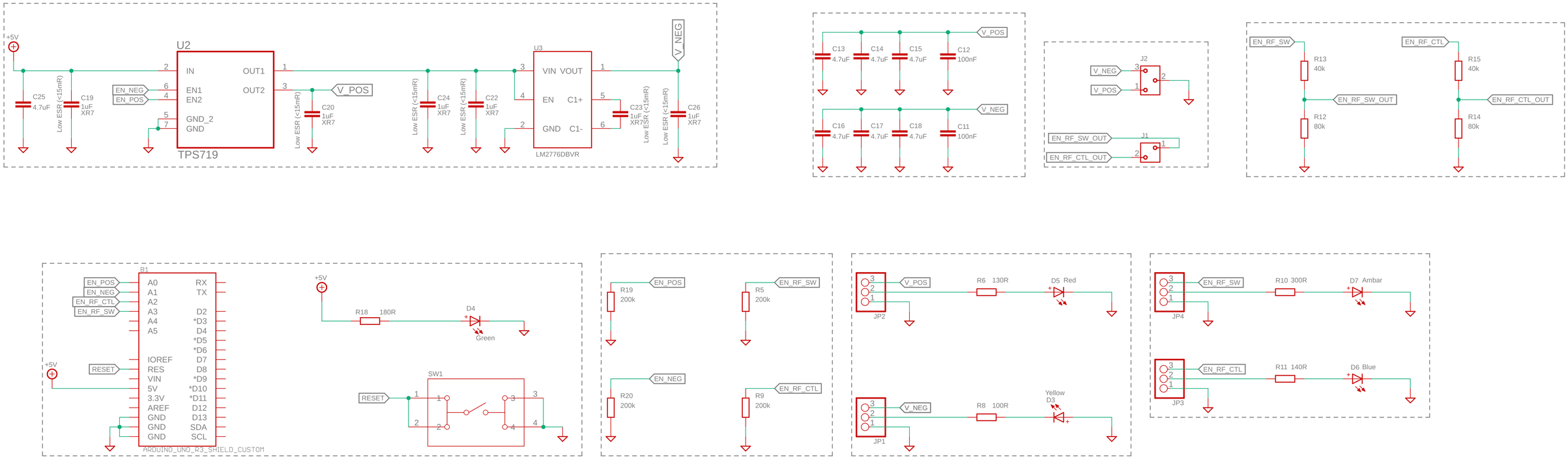

mmTag-PowerSupply

TITLE: Shield

Document Number:

Artur Balanuta

REV: B

Date: 4/4/20 12:35 AM

Sheet: 1/1