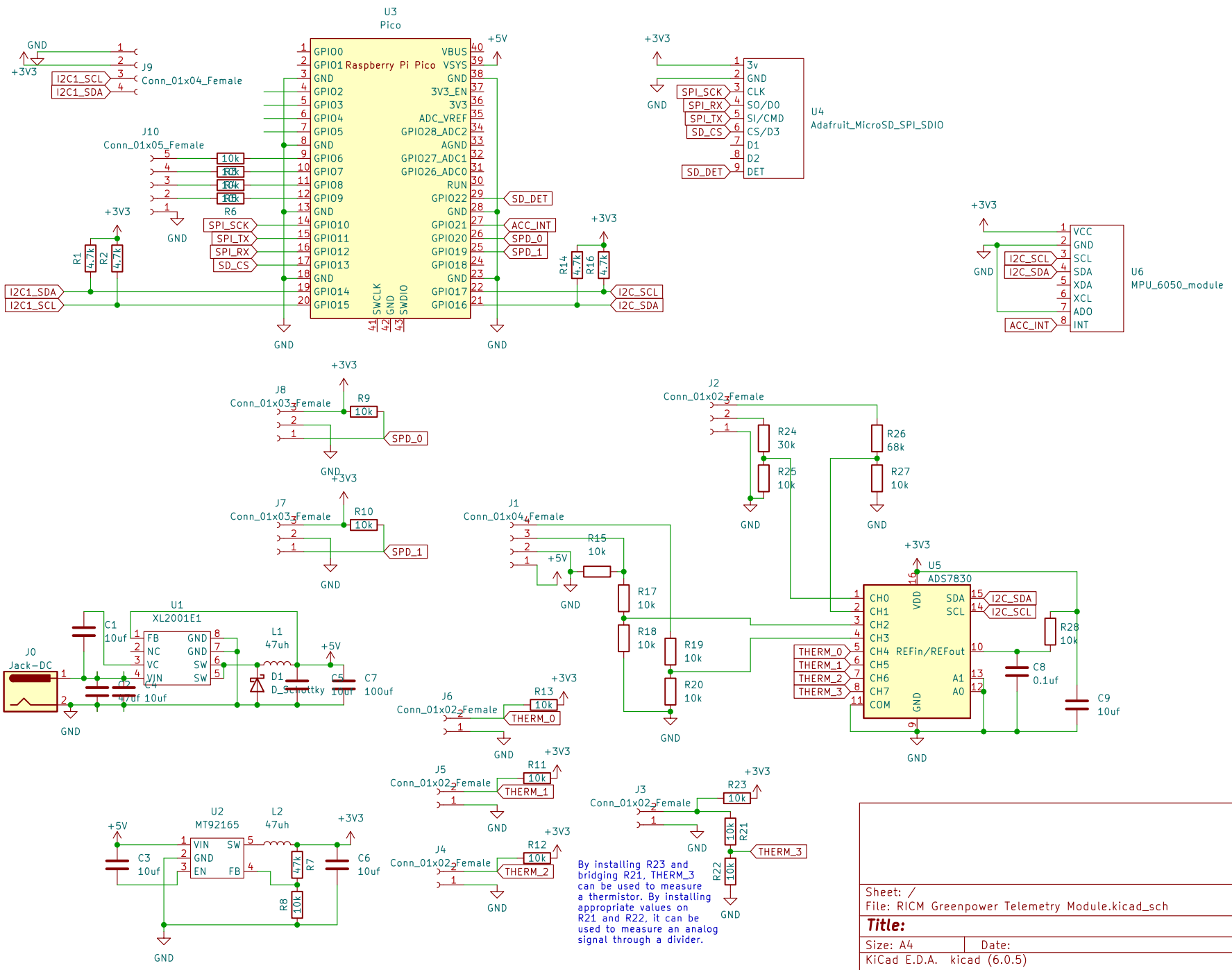

Sheet: /
File: RICM Greenpower Telemetry Module.kicad_sch

Title:

Size: A4	Date:	Rev:
KiCad E.D.A. kicad (6.0.5)		Id: 1/1