CS 306: Wired Networks (Part-II)

Dr. Ayan Mondal

Assistant Professor

Dept. of CSE, IIT Indore

https://www.iiti.ac.in/people/~ayanm/

Outline

- SONET
- Asynchronous Transfer Mode (ATM)

SONET

- A wide area network (WAN), SONET, is used as a transport network to carry loads from other WANs.

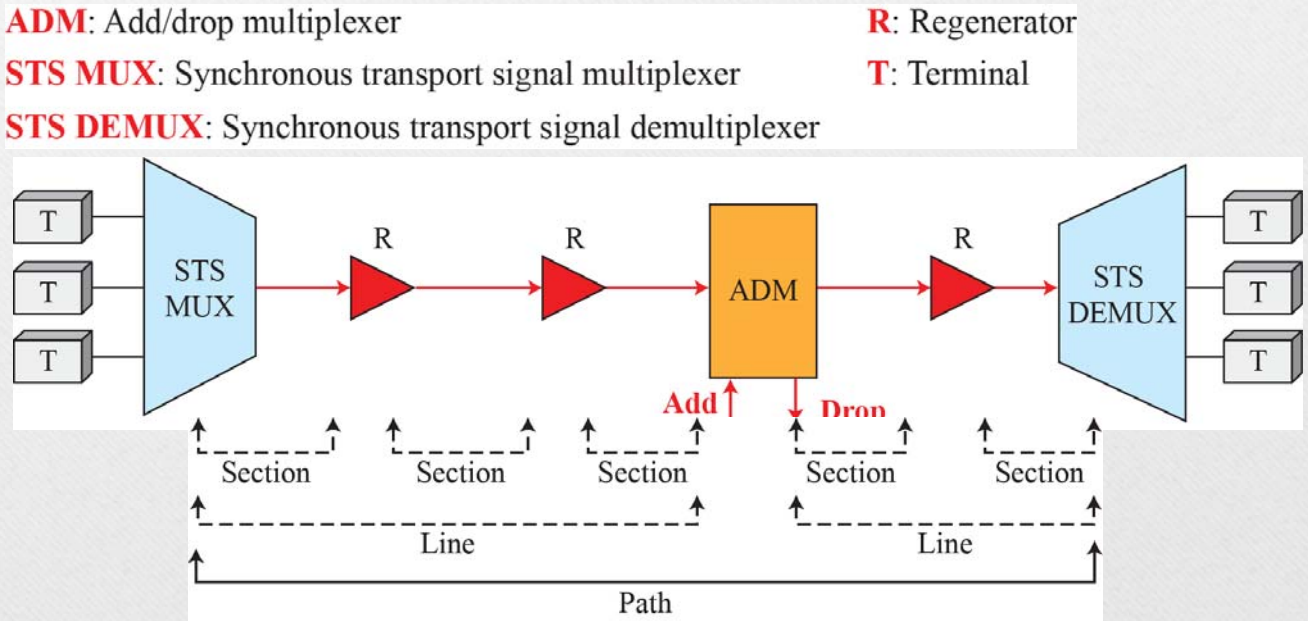

SONET Layers

- The SONET standard includes four layers:
  - Photonic
  - Section
  - Line
  - Path layer
- They correspond to both the physical and the data-link layers

SONET layers compared with OSI or TCP/IP

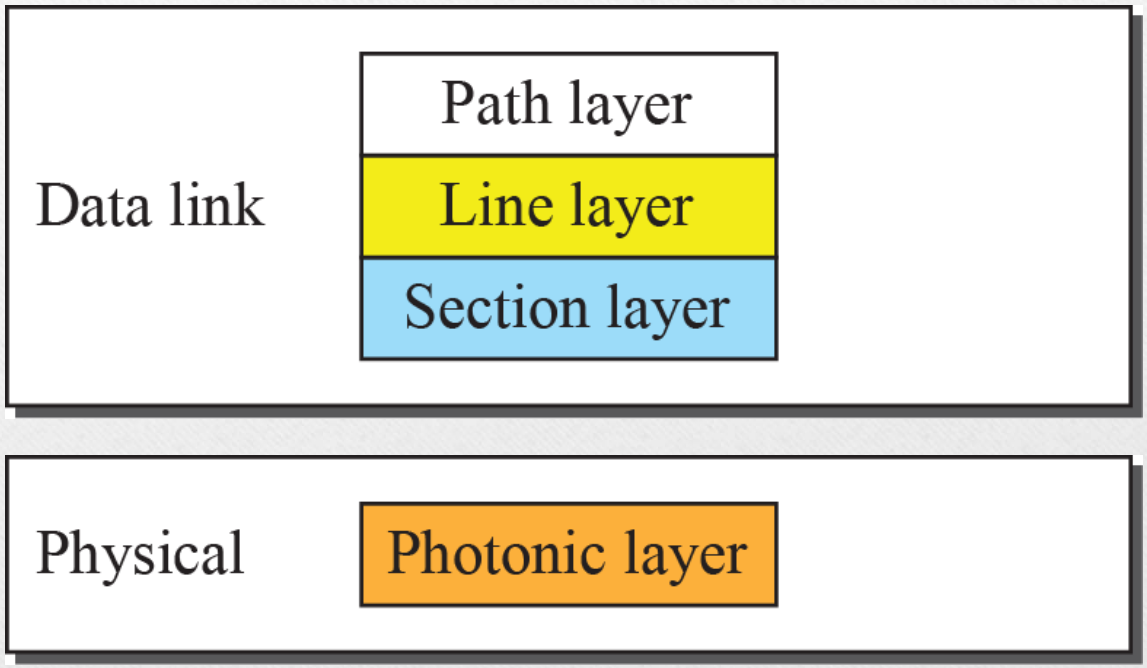

SONET Frames

- Each synchronous transfer signal STS-n is composed of 8000 frames. Each frame is a two-dimensional matrix of bytes with 9 rows by 90 × n columns.
- For example, an STS-1 frame is 9 rows by 90 columns (810 bytes), and an STS-3 is 9 rows by 270 columns (2430 bytes).

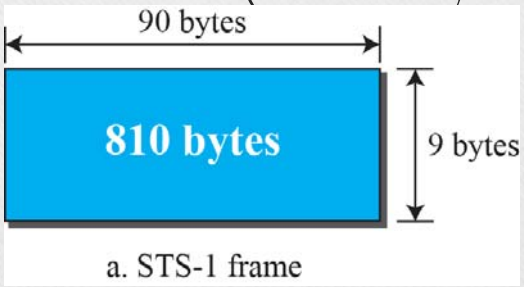

a. STS-1 frame

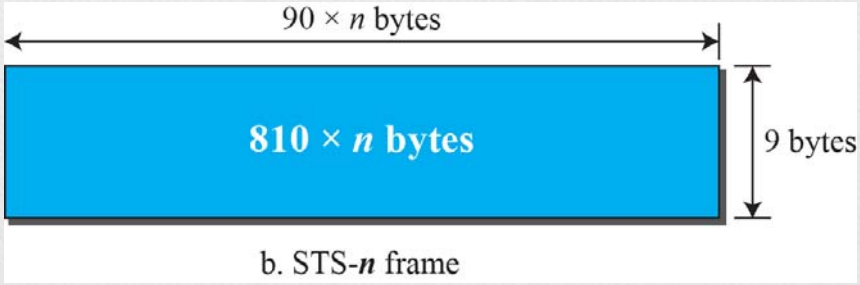

b. STS-*n* frame

STS-1 frames in transition

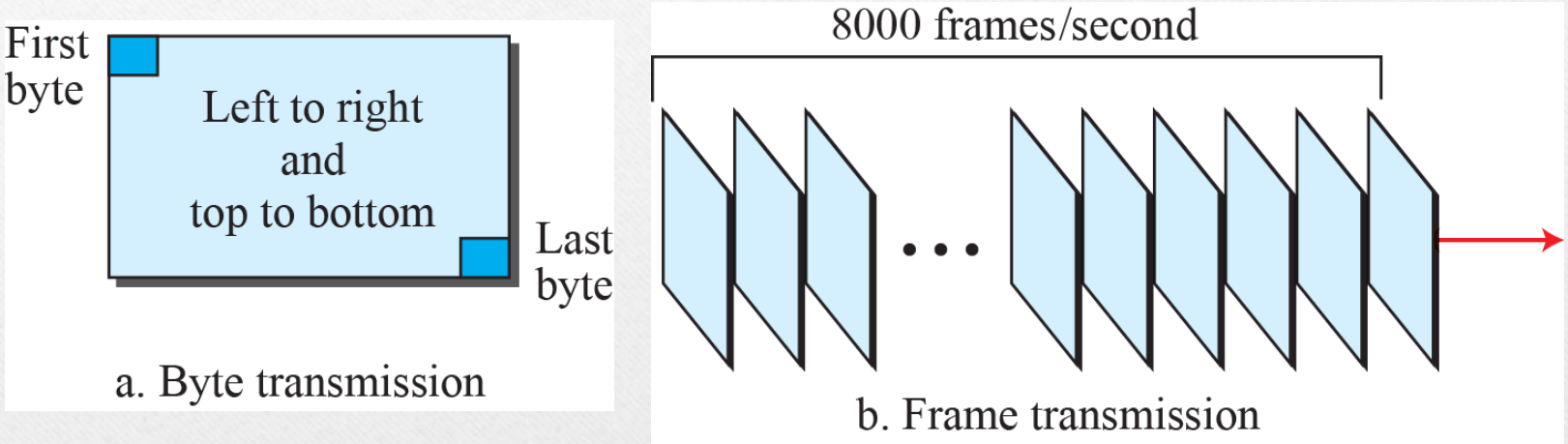

Example

- Find the data rate of an STS-1 signal.
- Solution: STS-1, like other STS signals, sends 8000 frames per second. Each STS-1 frame is made of 9 by (1 × 90) bytes. Each byte is made of 8 bits. The data rate is

$$\text{STS-1 data rate} = 8000 \times 9 \times (1 \times 90) \times 8 = 51.840 \text{ Mbps}$$

Example-2

- Find the data rate of an STS-3 signal.
- Solution: STS-3, like other STS signals, sends 8000 frames per second. Each STS-3 frame is made of 9 by (3 × 90) bytes. Each byte is made of 8 bits. The data rate is

$$\text{STS-3 data rate} = 8000 \times 9 \times (3 \times 90) \times 8 = 155.52 \text{ Mbps}$$

Example-3

- What is the duration of an STS-1 frame? STS-3 frame? STS-n frame?
- Solution: In SONET, 8000 frames are sent per second. This means that the duration of an STS-1, STS-3, or STS-n frame is the same and equal to 1/8000 s, or 125 μs.

STS-1 frame overheads

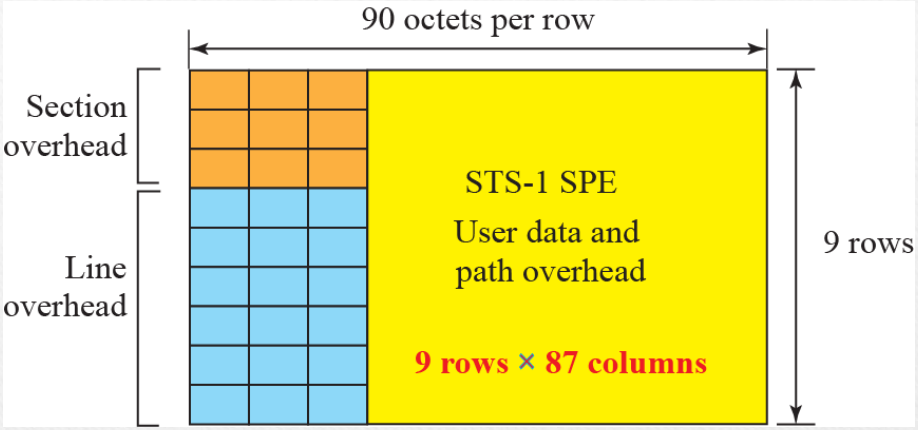

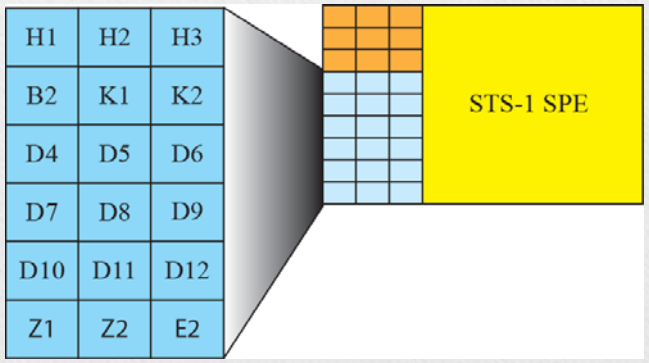

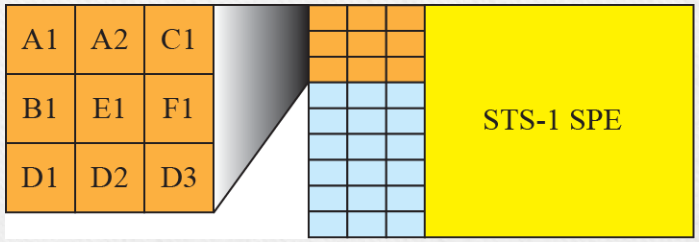

A1, A2: Alignment
B1: Parity byte
C1: Identification
D1, D2, D3: Management
E1: Order wire byte
F1: User

B2: Line parity byte
D4-D12: Management bytes
E2: Order wire byte
H1, H2, H3: Pointers
K1, K2: Automatic protection switching bytes
Z1, Z2: Growth bytes (reserved)

STS-1 frame path overhead

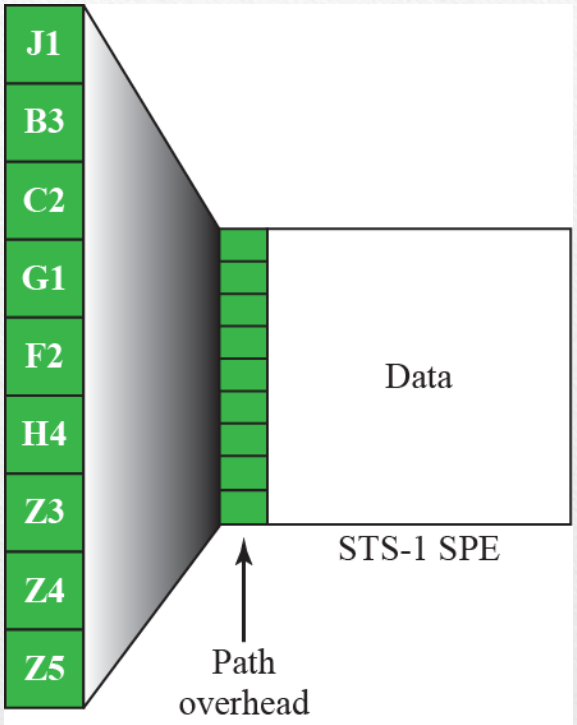

B3: Path parity byte

C2: Path signal label byte

F2: Path user channel byte

G1: Path status byte

H4: Multiframe indicator

J1: Path trace byte

Z3, Z4, Z5: Growth bytes (reserved)

Example

- What is the user data rate of an STS-1 frame (without considering the overheads)?
- Solution: The user data part of an STS-1 frame is made of 9 rows and 86 columns.

$$\text{STS-1 user data rate} = 8000 \times 9 \times (1 \times 86) \times 8 = 49.536 \text{ Mbps}$$

STS Multiplexing

- In SONET, frames of lower rate can be synchronously time-division multiplexed into a higher-rate frame.

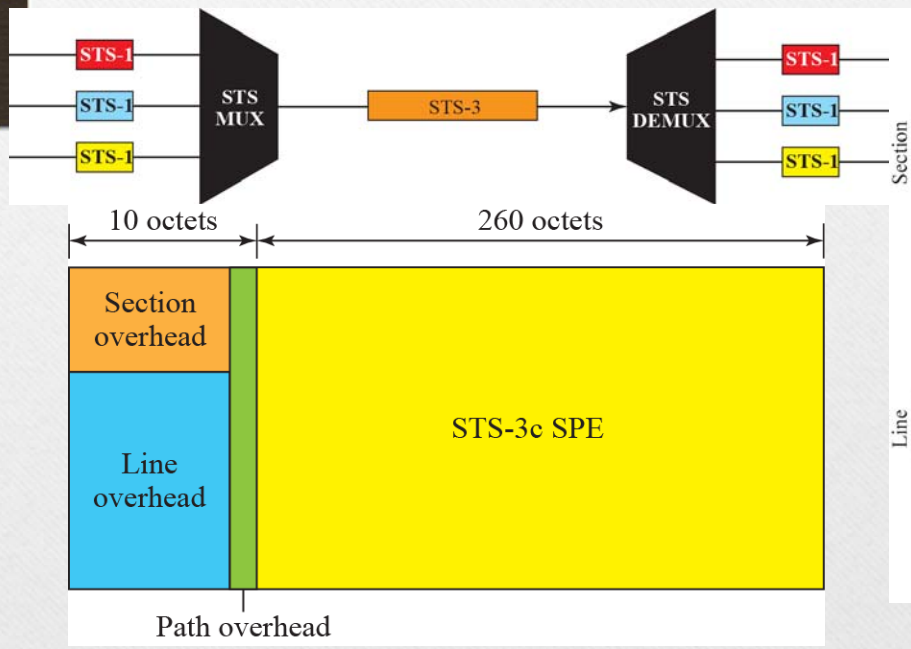

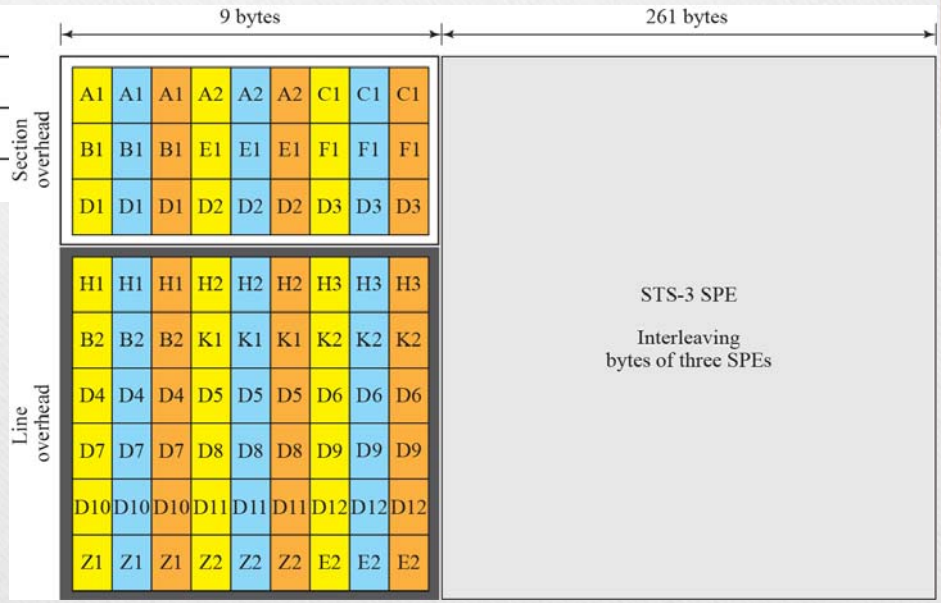

Asynchronous Transfer Mode

- Asynchronous Transfer Mode (ATM) is a switched wide area network based on the cell relay protocol designed by the ATM forum and adopted by the ITU-T.
- The combination of ATM and SONET will allow high-speed interconnection of all the world's networks.
- In fact, ATM can be thought of as the "highway" of the information superhighway.

Design Goals

- Among the challenges faced by the designers of ATM, six stand out.
  - A transmission system to optimal use of high-data-rate.
  - The system must interface with existing systems.
  - The design must be implemented inexpensively.
  - The new system must support the existing hierarchies
  - The new system must be connection-oriented.
  - Move as many of the functions to hardware as possible.

Multiplexing

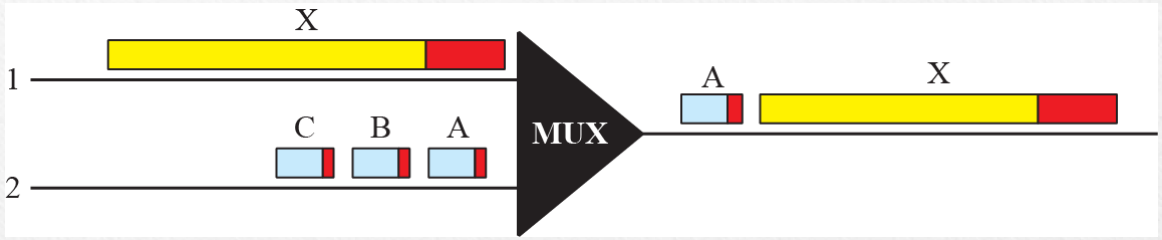

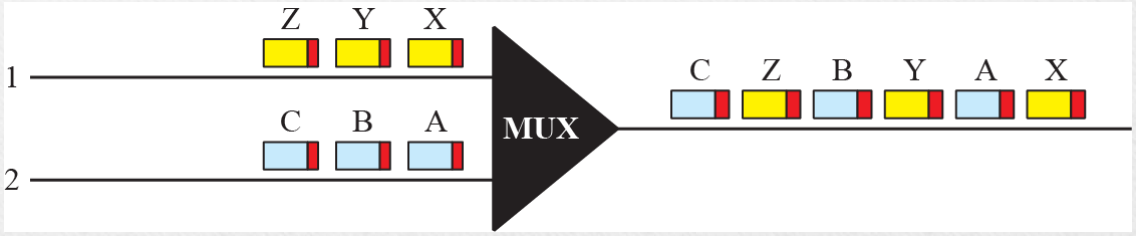

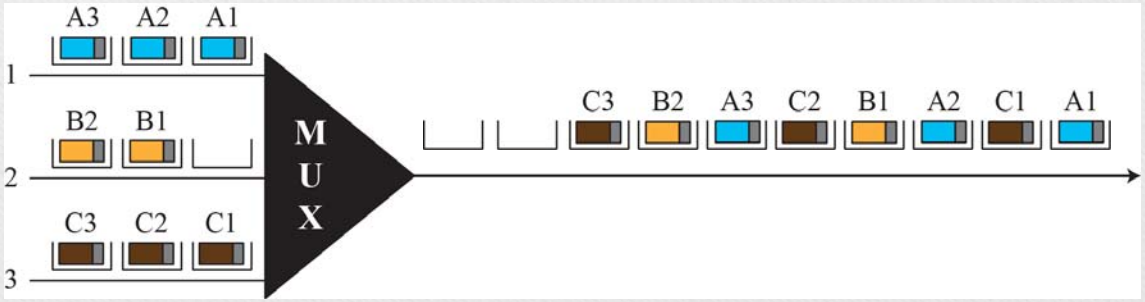

Architecture

- ATM is a cell-switched network. The user access devices, called the endpoints, are connected through a user-to-network interface (UNI) to the switches inside the network. The switches are connected through network-to-network interfaces (NNIs).

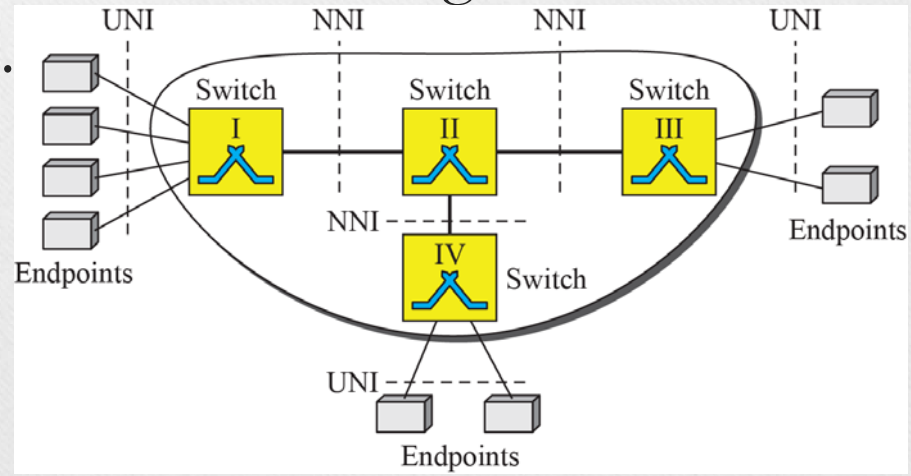

Routing with a switch

Input			Output		
Interface	VPI	VCI	Interface	VPI	VCI
1	153	67	3	140	92
.....	.....	.....	.....	...	.....

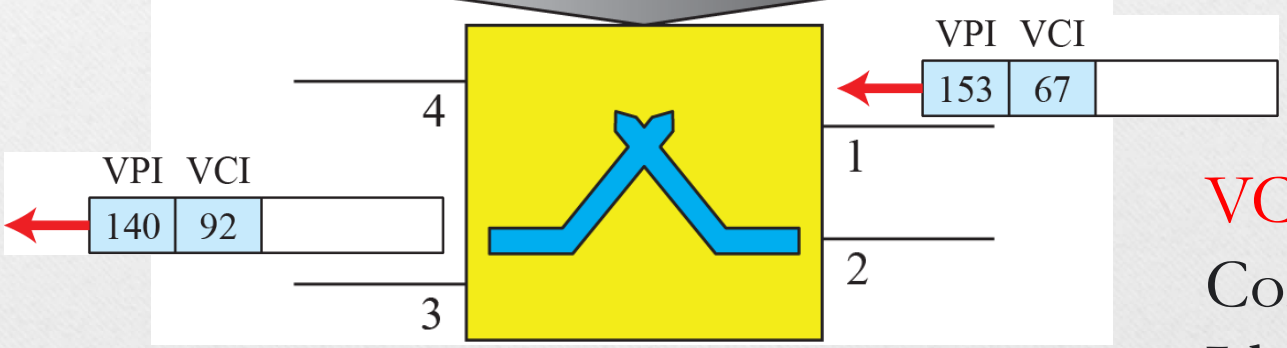

VPI: Virtual Path Identifier

VCI: Virtual Connection Identifier

Next Class

- Wireless Networks

?

ayanm@iiti.ac.in

Room No. 407, POD-1A