CS 306: Physical Layer (Part-IV)

Dr. Ayan Mondal

Assistant Professor

Dept. of CSE, IIT Indore

https://www.iiti.ac.in/people/~ayanm/

Outline

- Bandwidth Utilization
  - Multiplexing and Spread Spectrum
- Transmission Media
  - Guided and Unguided Media
- Switching
  - Circuit- and Packet-Switched Network

Multiplexing

- Multiplexing is the set of techniques that allows the simultaneous transmission of multiple signals across a single data link.

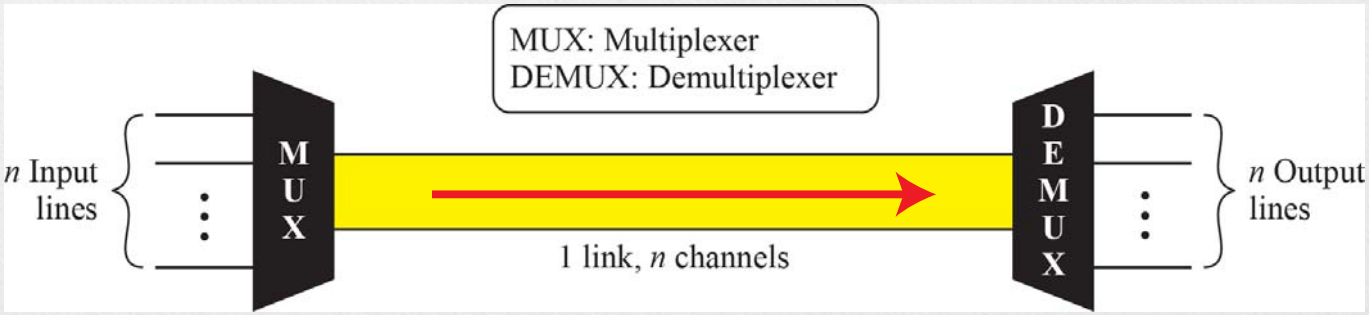

Types of multiplexing

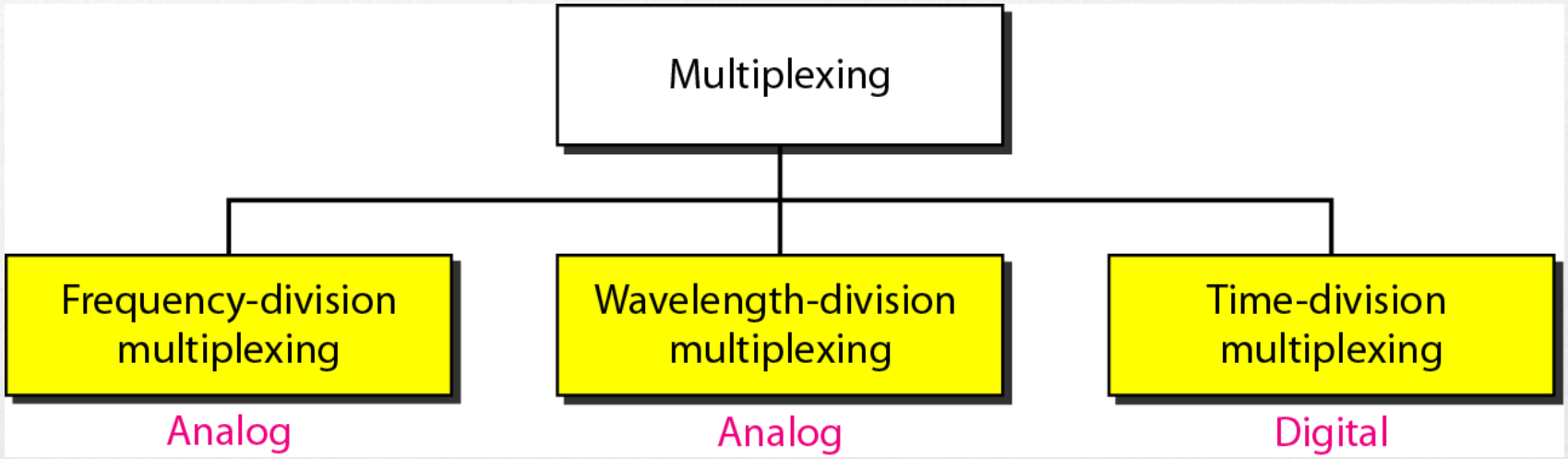

Frequency-Division Multiplexing

- Frequency-division multiplexing (FDM) is an analog technique that can be applied when the bandwidth of a link (in hertz) is greater than the combined bandwidths of the signals to be transmitted.
- In FDM, signals generated by each sending device modulate different carrier frequencies.
- These modulated signals are then combined into a single composite signal that can be transported by the link.

FDM Process

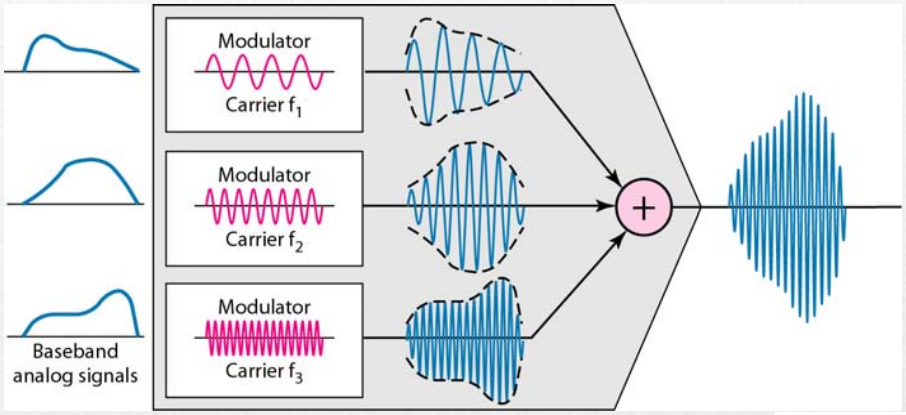
Modulator
Carrier f_1
Modulator
Carrier f_2
Modulator
Carrier f_3
Baseband analog signals

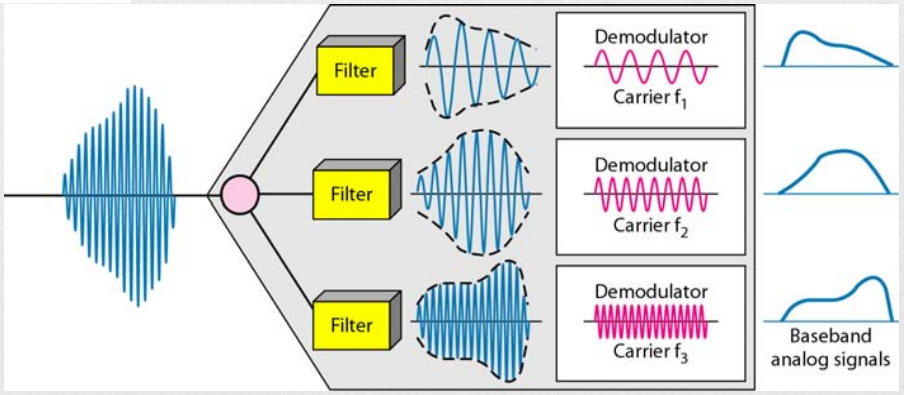
Filter
Filter
Filter
Demodulator
Carrier f_1
Demodulator
Carrier f_2
Demodulator
Carrier f_3
Baseband analog signals

Wavelength-Division Multiplexing

- Wavelength-division multiplexing is designed to use the high-data-rate capability of fiber-optic cable.
- Optical fiber data rate is higher than the data rate of metallic transmission cable. Multiplexing combines several lines into one and use the capacity efficiently.

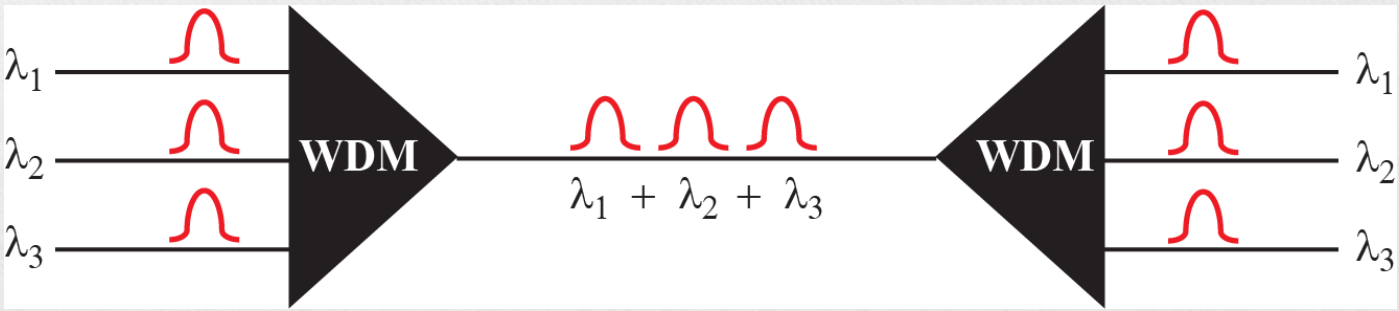

Time-Division Multiplexing

- Time-division multiplexing (TDM) is a digital process that allows several connections to share the high bandwidth of a link.
- Instead of sharing a portion of the bandwidth as in FDM, time is shared.

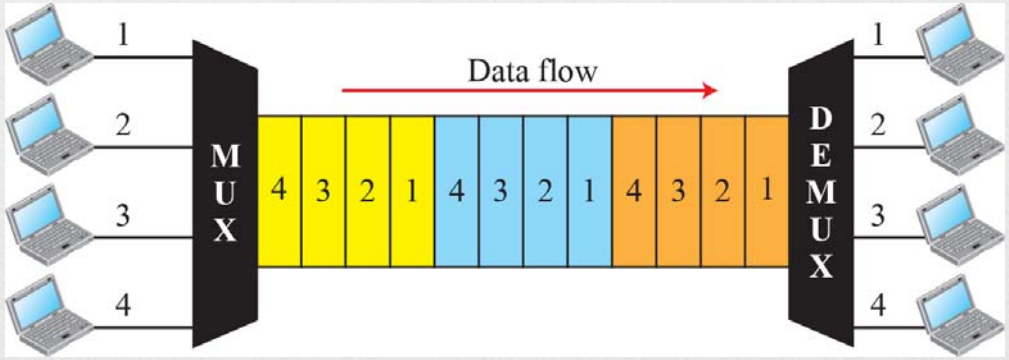

Spread Spectrum

- In wireless applications, stations must be able to share this medium without interception by an eavesdropper and without being subject to jamming from a malicious intruder.
- To achieve these goals, spread spectrum techniques add redundancy.

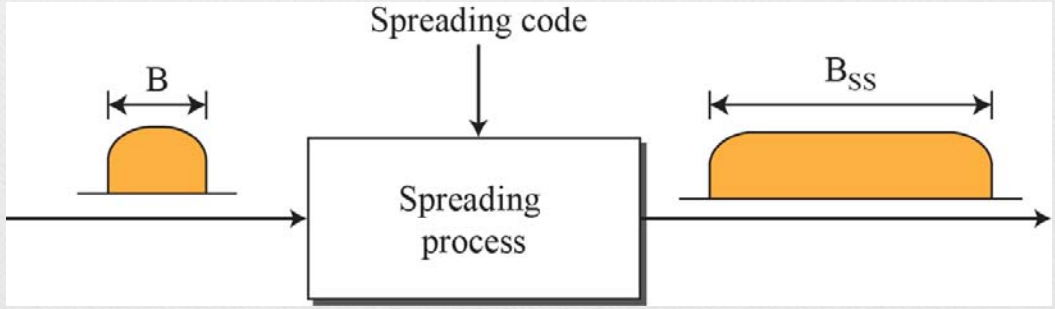

Frequency hopping spread spectrum

- The frequency hopping spread spectrum (FHSS) technique uses M different carrier frequencies that are modulated by the source signal.
- At one moment, the signal modulates one carrier frequency; at the next moment, the signal modulates another carrier frequency.
- Although the modulation is done using one carrier frequency at a time, M frequencies are used in the long run.

FHSS (Contd.)

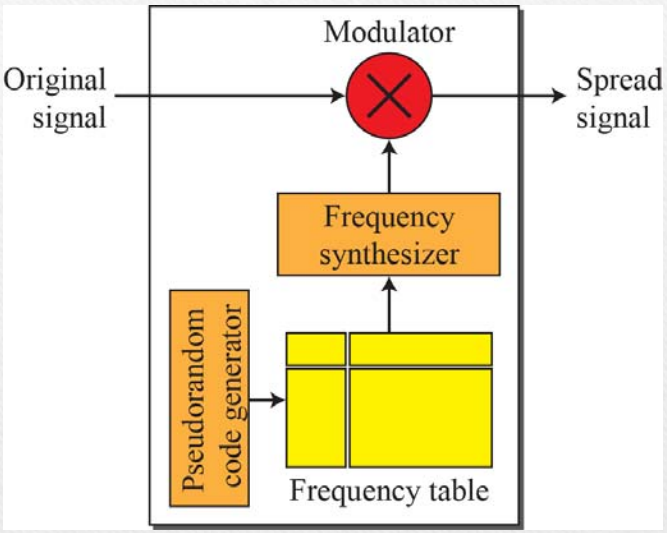
Modulator
Original signal
Spread signal
Frequency synthesizer
Pseudorandom code generator
Frequency table

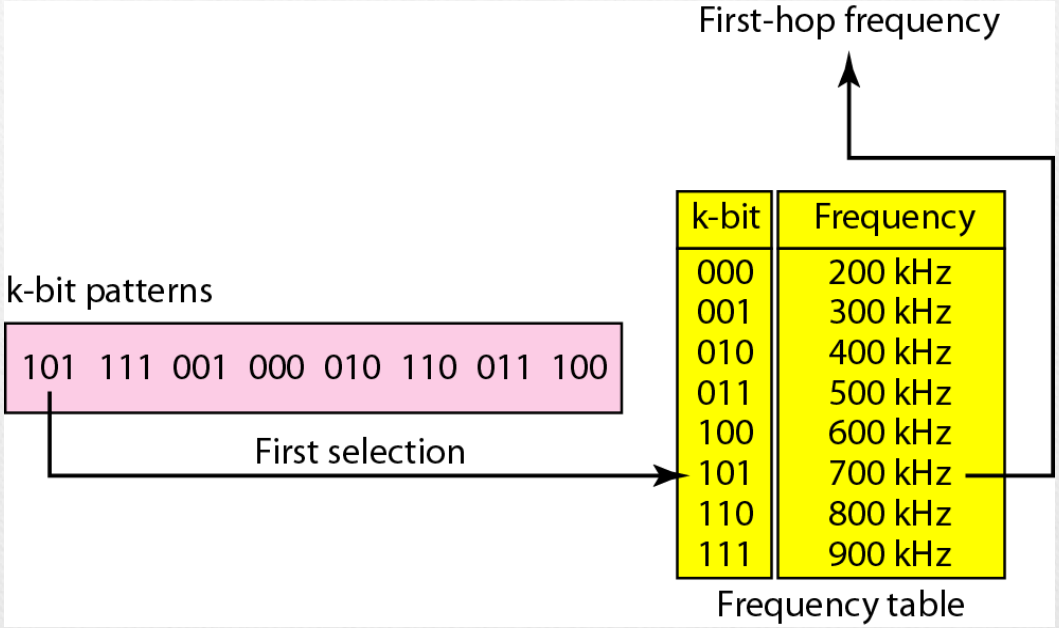
First-hop frequency
k-bit patterns
101 111 001 000 010 110 011 100
First selection
k-bit
Frequency
000 200 kHz
001 300 kHz
010 400 kHz
011 500 kHz
100 600 kHz
101 700 kHz
110 800 kHz
111 900 kHz
Frequency table

Bandwidth sharing

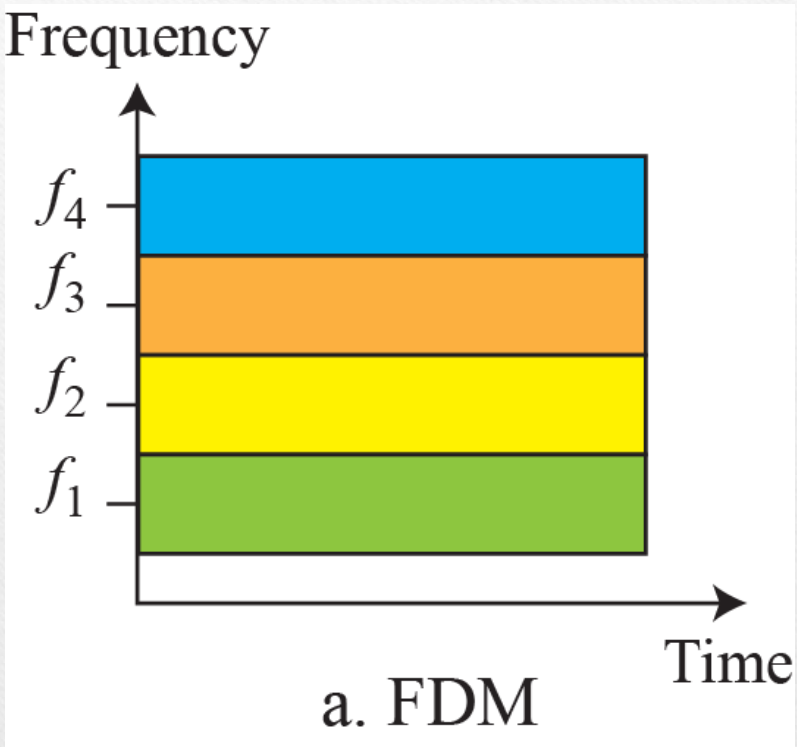

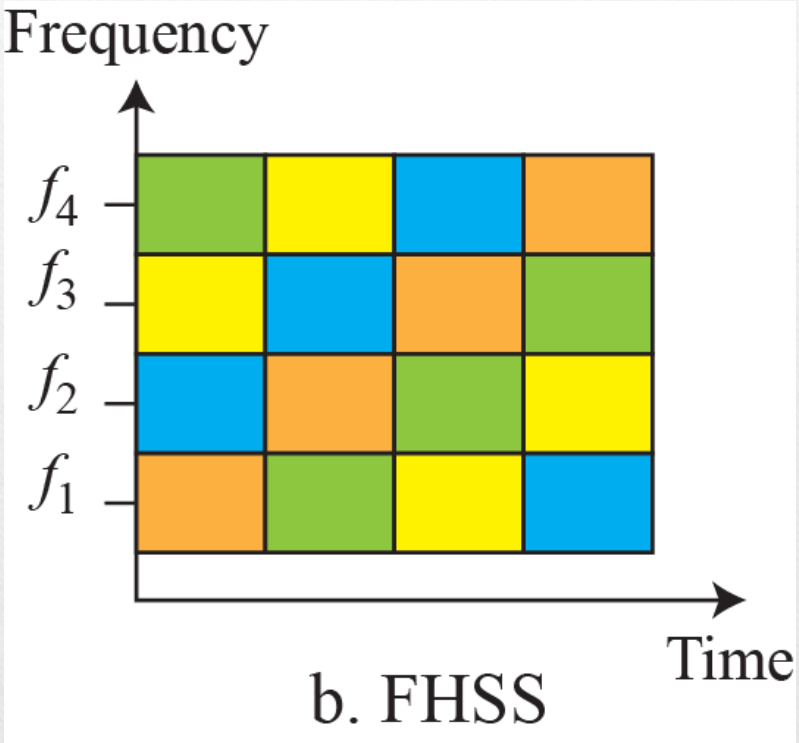

Direct sequence spread spectrum

- The direct sequence spread spectrum (DSSS) technique also expands the bandwidth of the original signal, but the process is different.
- In DSSS, we replace each data bit with n bits using a spreading code.
- In other words, each bit is assigned a code of n bits, called chips, where the chip rate is n times that of the data bit.

DSSS (Contd.)

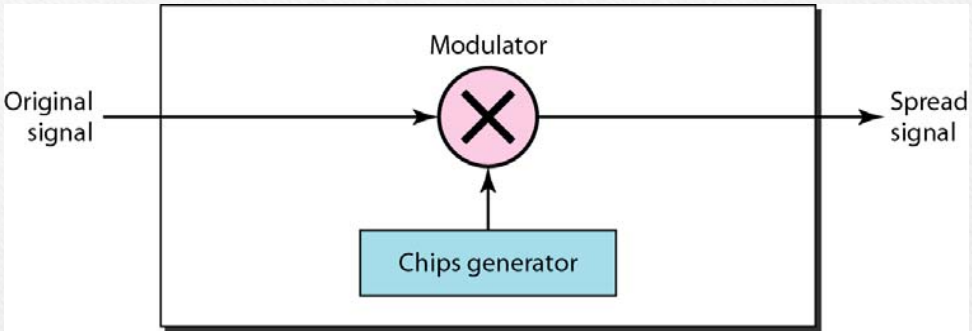
Modulator
Original signal
Spread signal
Chips generator

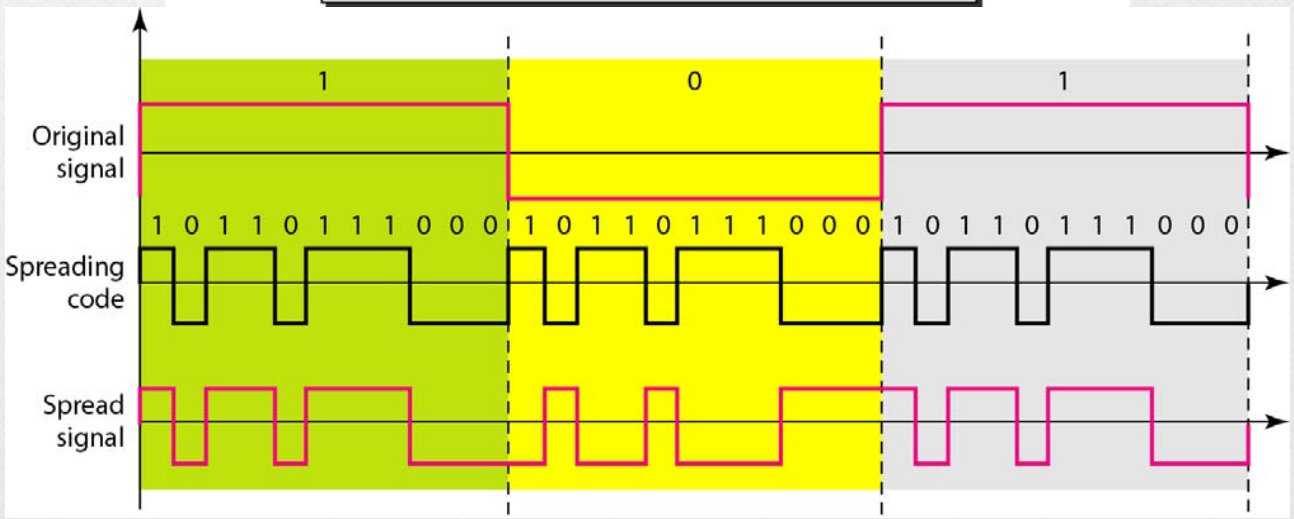
1
0
1
Original signal
1 0 1 1 0 1 1 1 0 0 0
1 0 1 1 0 1 1 1 0 0 0
1 0 1 1 0 1 1 1 0 0 0
Spreading code
Spread signal

Transmission Media

Transmission media and physical layer

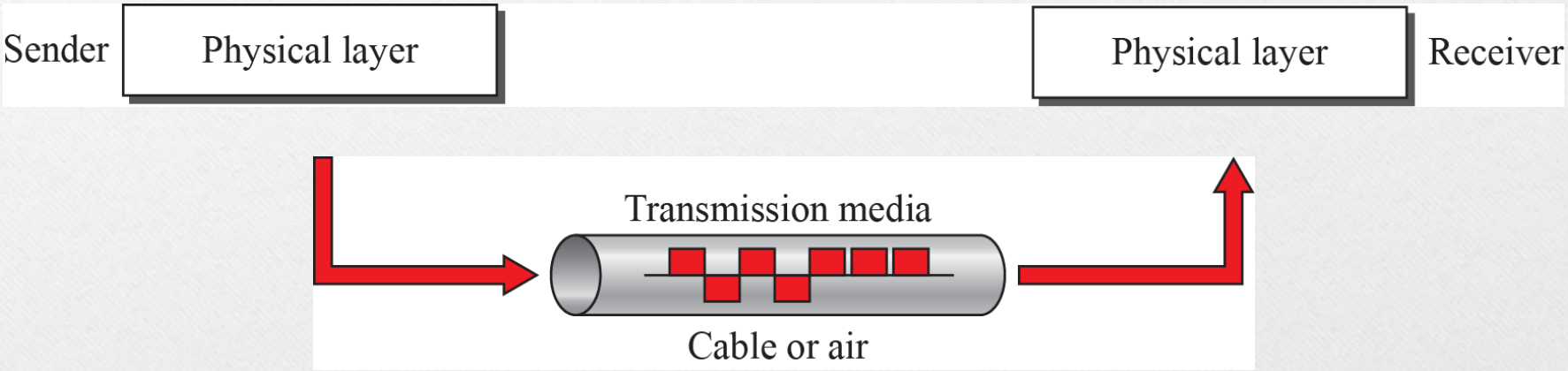

Types of transmission media

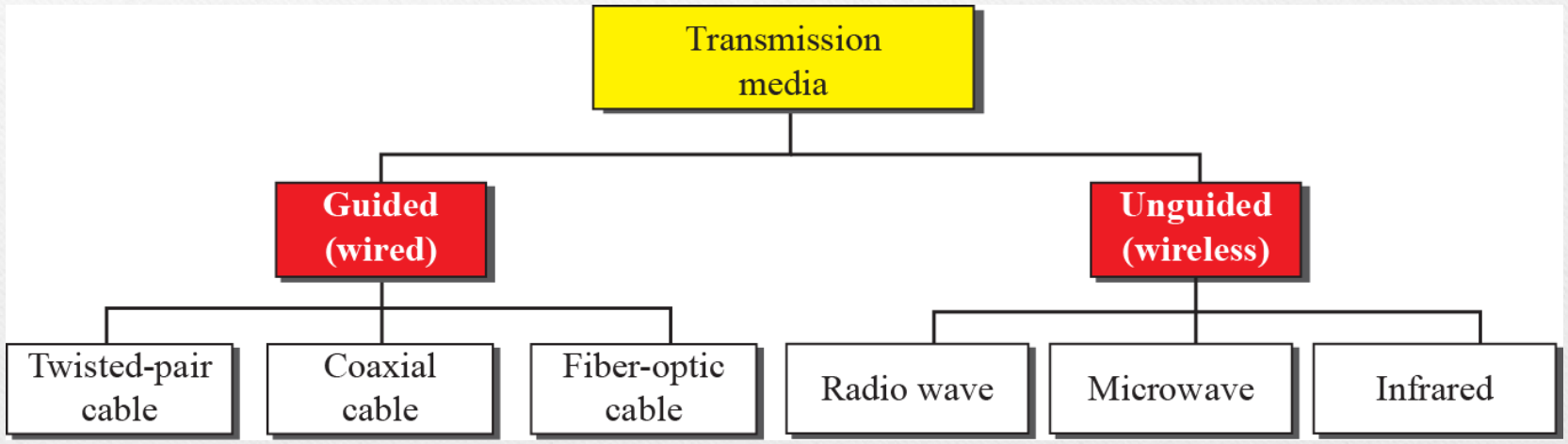

Guided Media

- Guided media, which are those that provide a conduit from one device to another, include twisted-pair cable, coaxial cable, and fiber-optic cable.

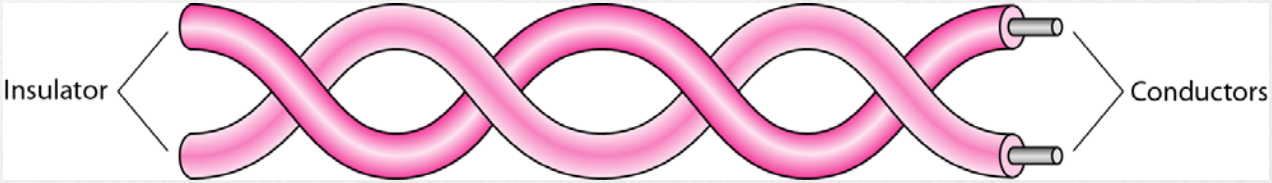

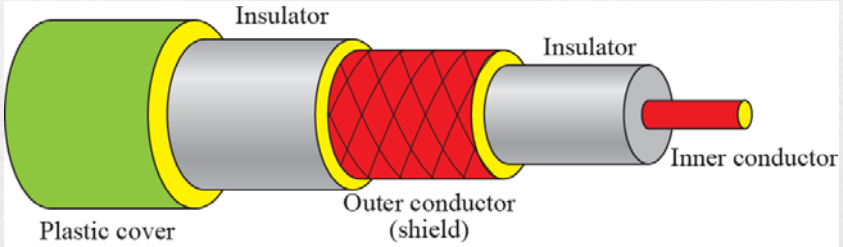

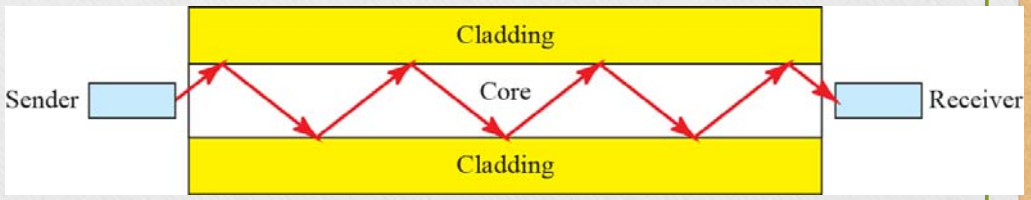

Unguided Media

- Unguided medium transport waves without using a physical conductor.
- This type of communication is often referred to as wireless communication.
- Signals are normally broadcast through free space and thus are available to anyone who has a device capable of receiving them.

Unguided Media (Contd.)

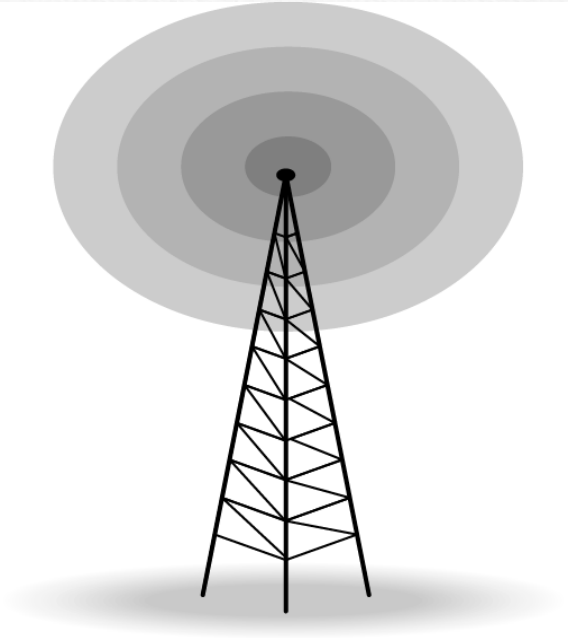

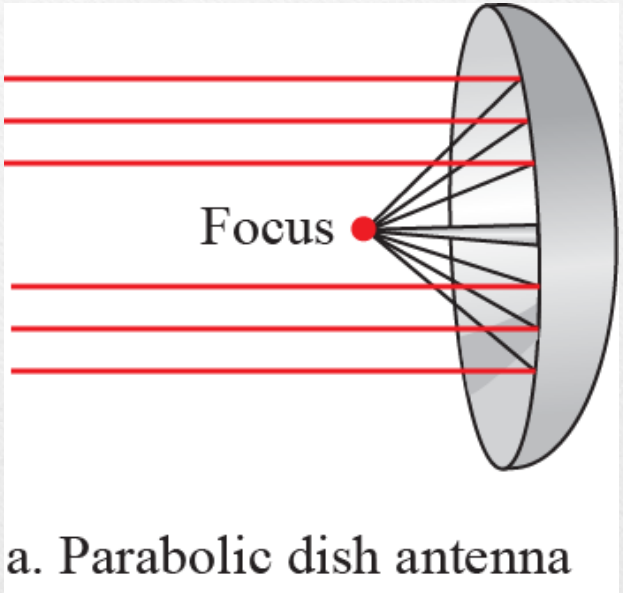

1. Omnidirectional 2. Unidirectional 3. Infrared

Switching

Methods of Switching

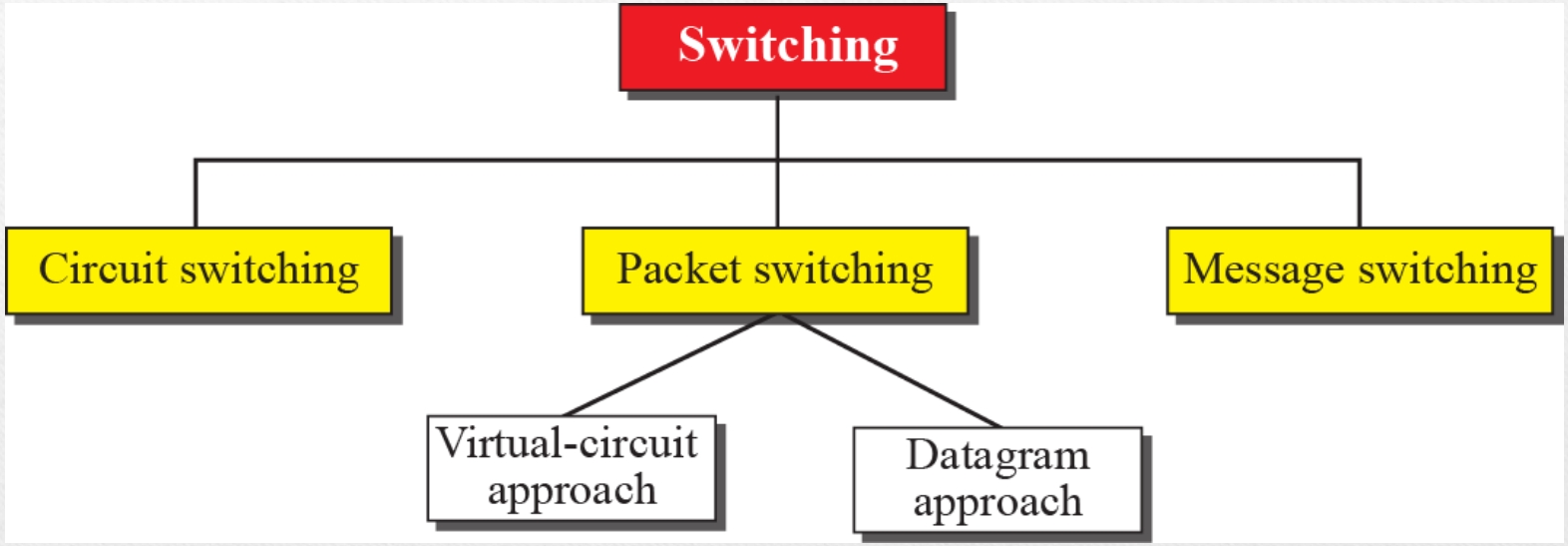

Circuit Switched Network

- A circuit-switched network consists of a set of switches connected by physical links.
- A connection between two stations is a dedicated path made of one or more links. However, each connection uses only one dedicated channel on each link.
- Each link is normally divided into n channels by using FDM or TDM

Circuit Switched Network (Contd.)

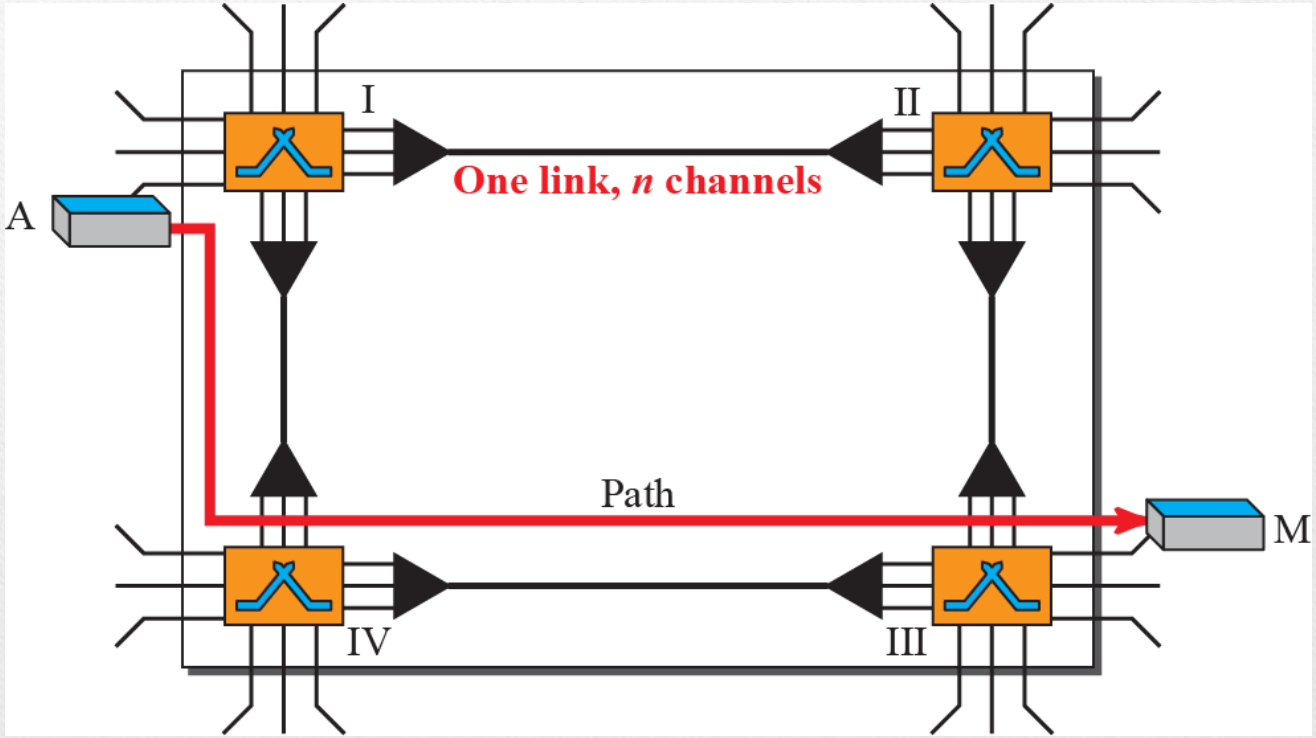

Circuit Switched Network (Contd.)

- Three phases in circuit switched network
  - Connection setup
  - Data transfer
  - Connection teardown

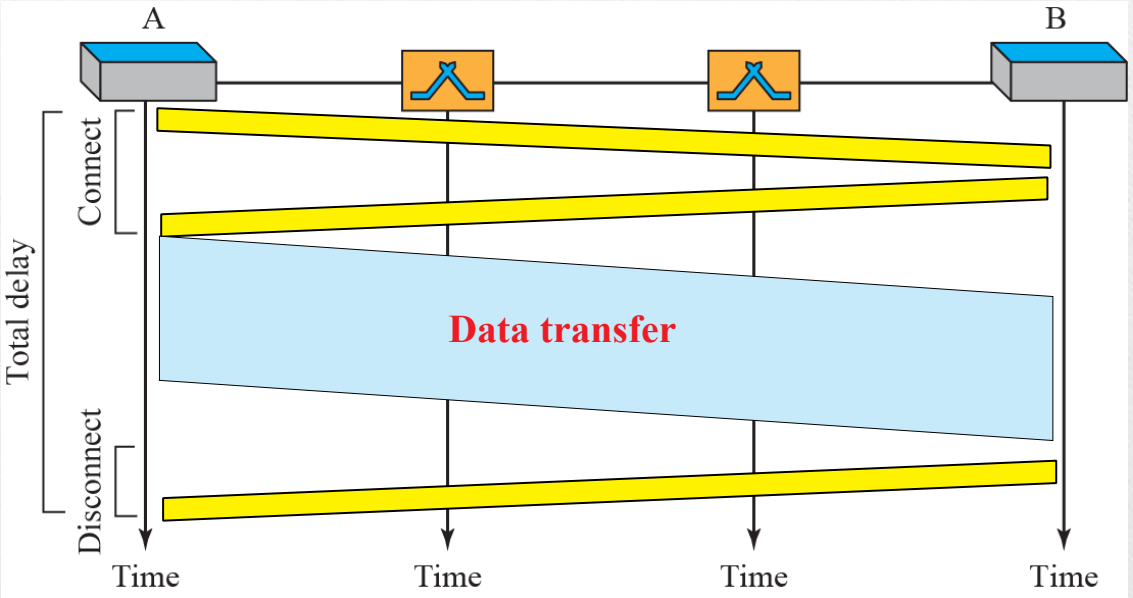

Circuit Switched Network (Contd.)

- Efficiency
  - Not efficient
  - Resources are blocked during the entire duration of the connection
- Delay
  - Minimal
  - Dedicated resources

Packet Switching

- The message is divided into packets of fixed or variable size.
- The size of the packet is determined by the network and the governing protocol.

Datagram Networks

- In a datagram network, each packet is treated independently of all others.
- Even if a packet is part of a multipacket transmission, the network treats it as though it existed alone.
- Packets in this approach are referred to as datagrams.

Datagram Networks (Contd.)

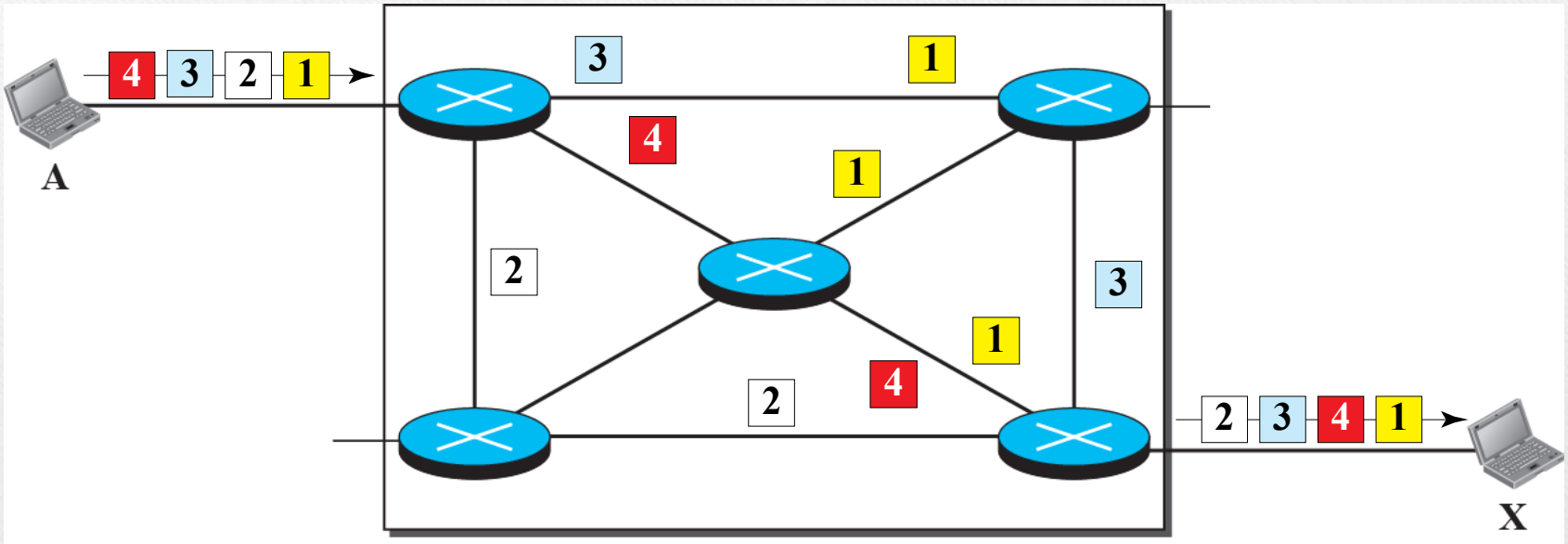

Datagram network

Routing table in a datagram network

Destination address	Output port
1232	1
4150	2
⋮	⋮
9130	3

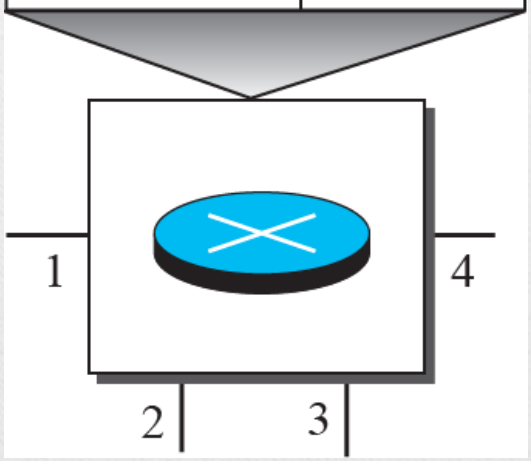

Delays in a datagram network

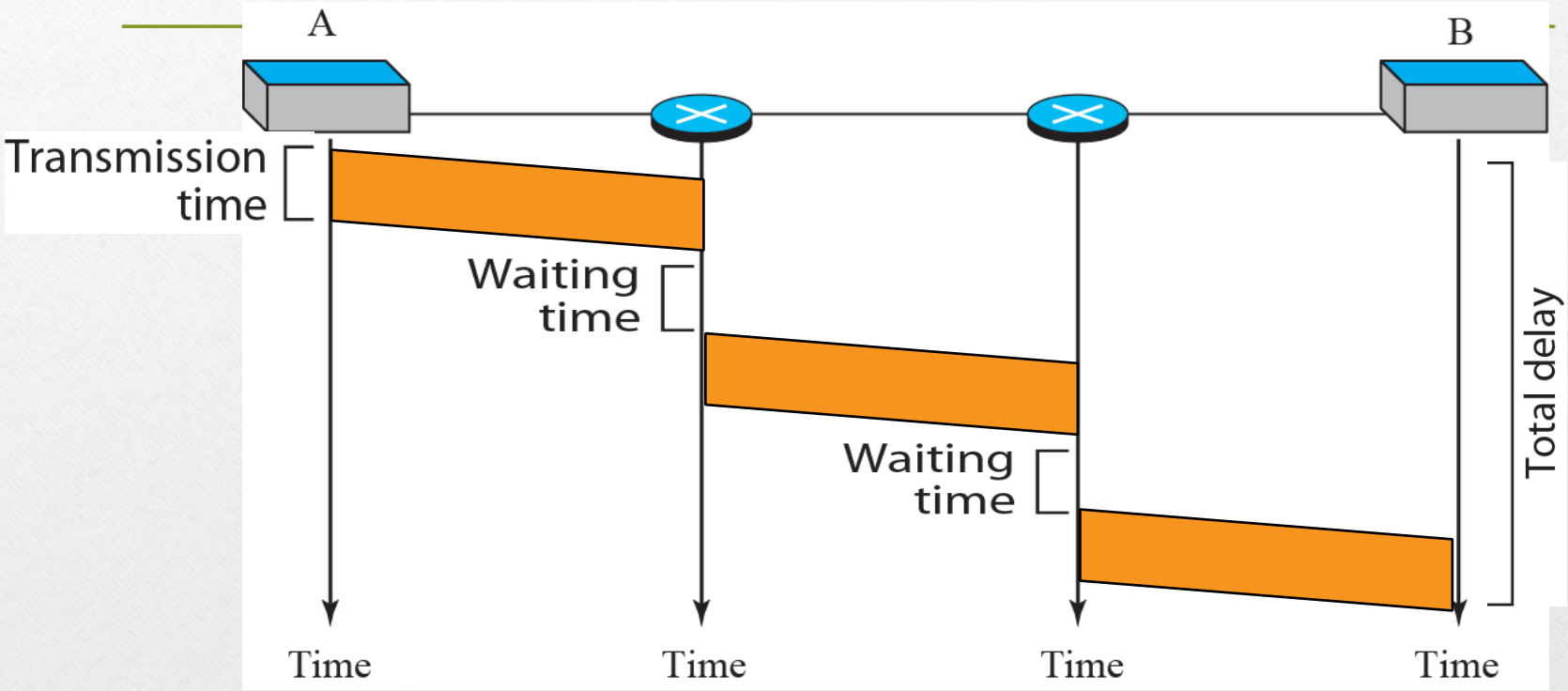

Virtual-Circuit Networks

- A virtual-circuit network is a cross between a circuit-switched network and a datagram network.

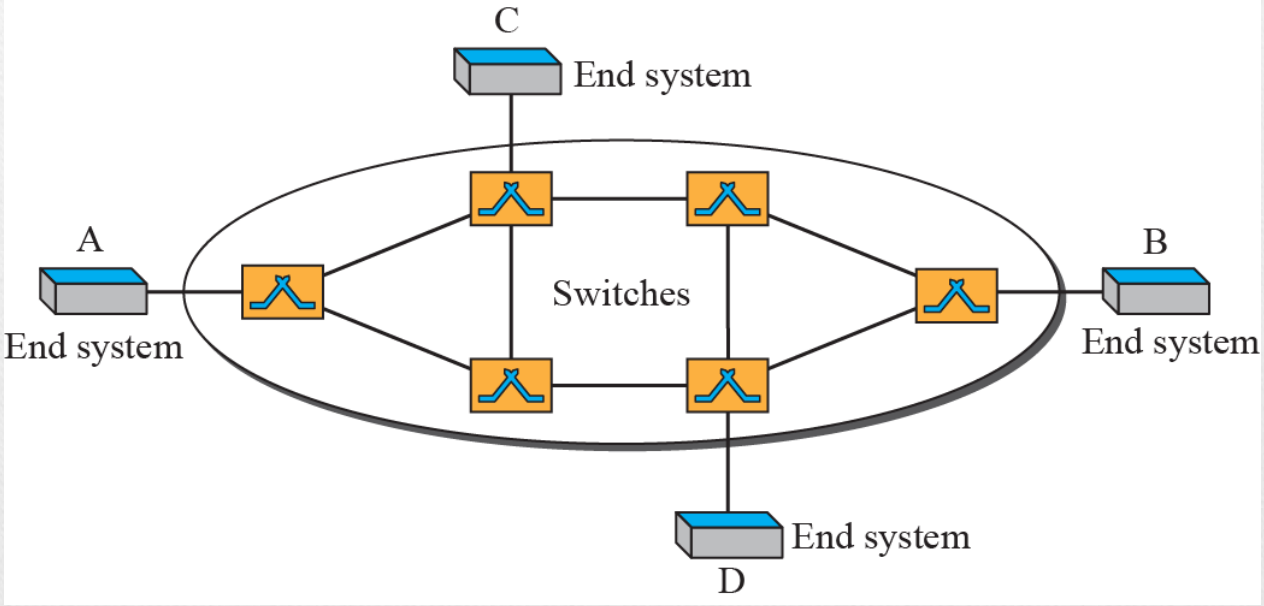

Virtual-Circuit Identifier (VCI)

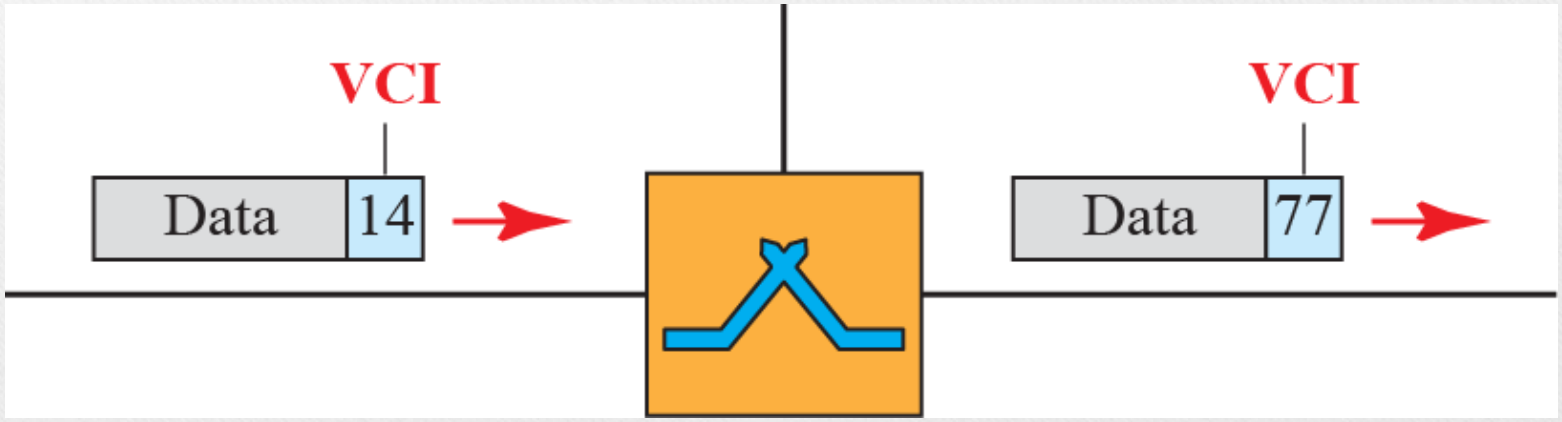

Switch and table for a virtual-circuit network

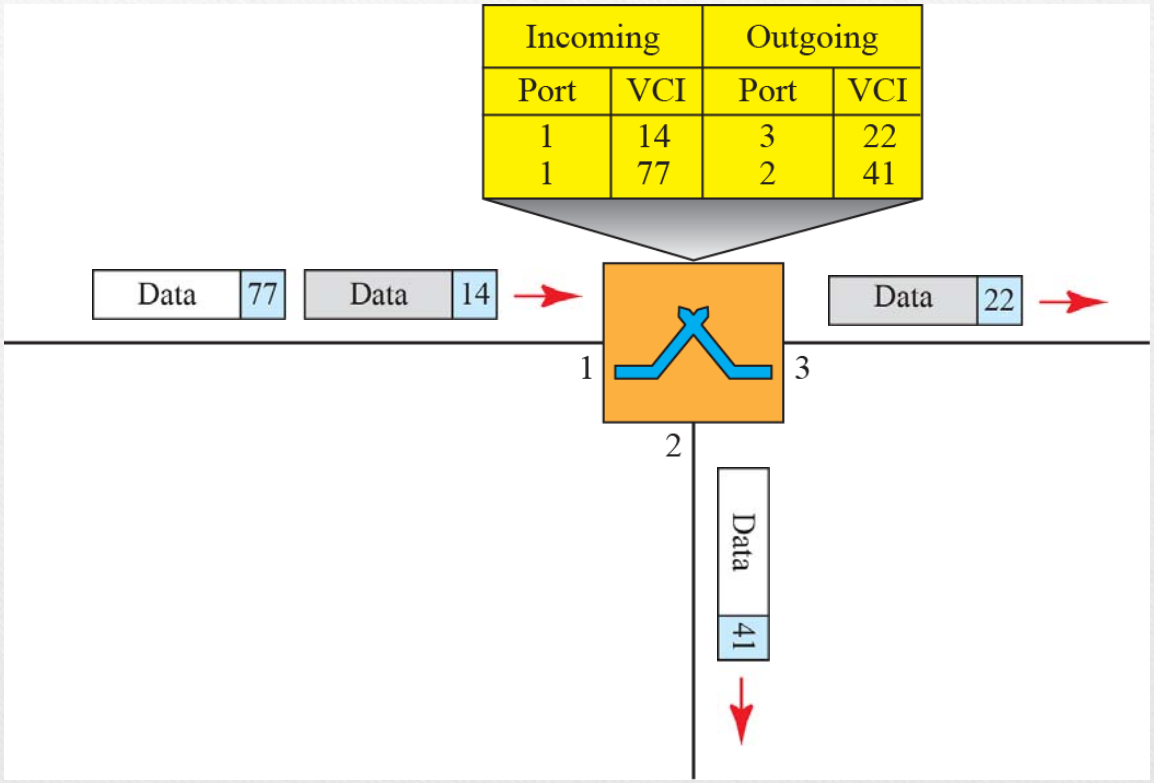

Source-to-destination data transfer

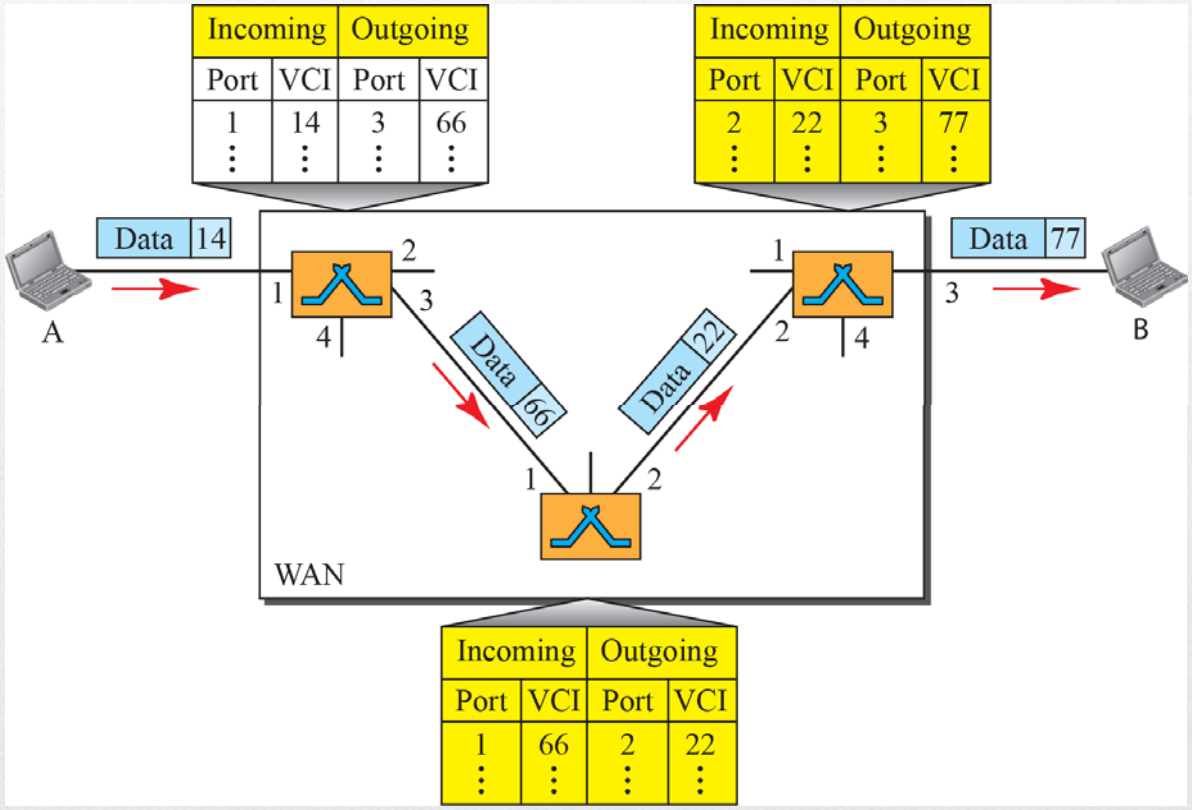

Setup request

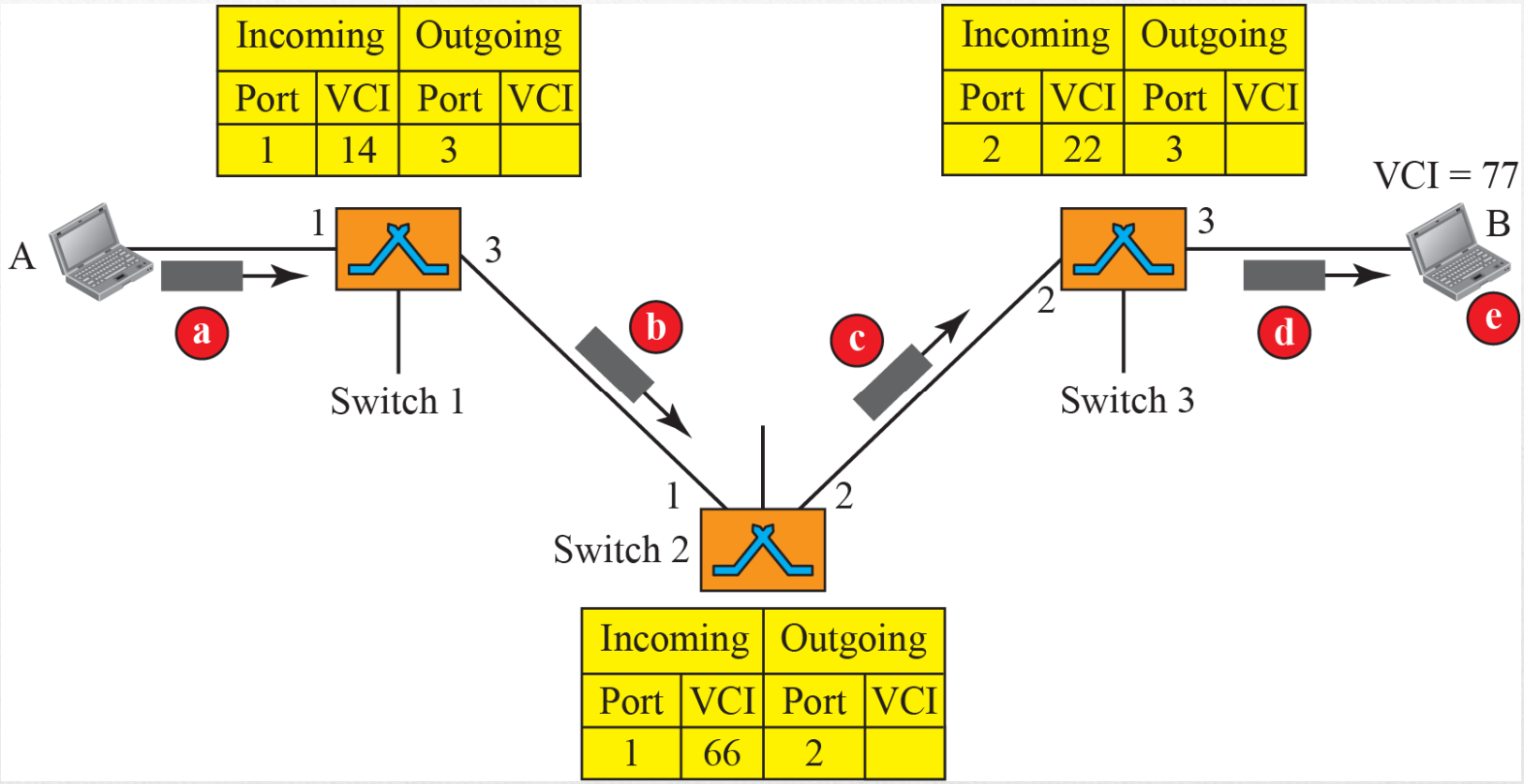

Setup acknowledgment

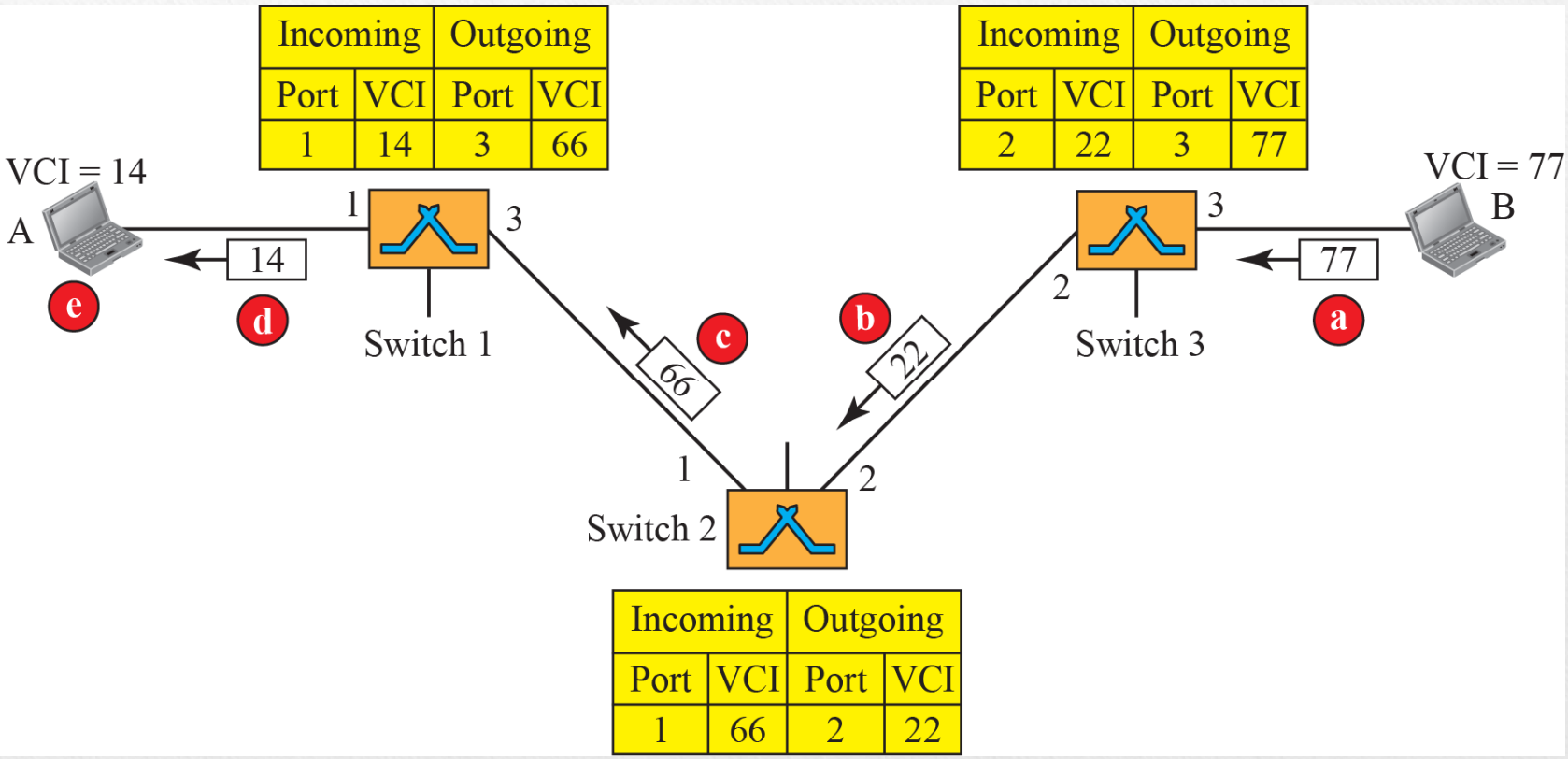

Delay in a virtual-circuit network

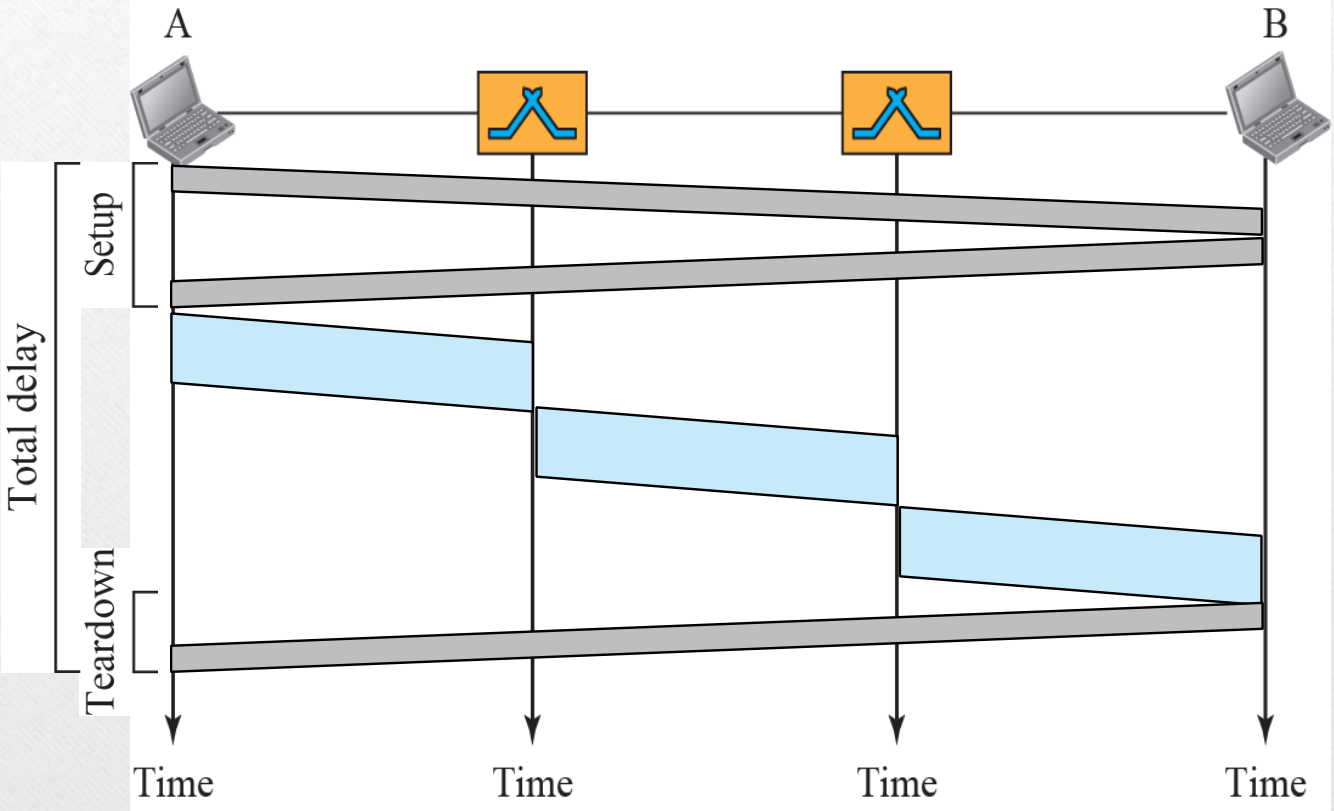

Next Class

- Data Link Layer

?

ayanm@iiti.ac.in

Room No. 407, POD-1A