CS 306: Introduction To Data-Link Layer

Dr. Ayan Mondal

Assistant Professor

Dept. of CSE, IIT Indore

https://www.iiti.ac.in/people/~ayanm/

Outline

- Communications in Data Link Layer
- Link Layer Addressing

Introduction

- The Internet is a combination of networks glued together by connecting devices (routers or switches). If a packet is to travel from a host to another host, it needs to pass through these networks. Figure 9.1 shows the same scenario we discussed in Chapter 3, but we are now interested in communication at the data-link layer.

Communication at the data-link layer

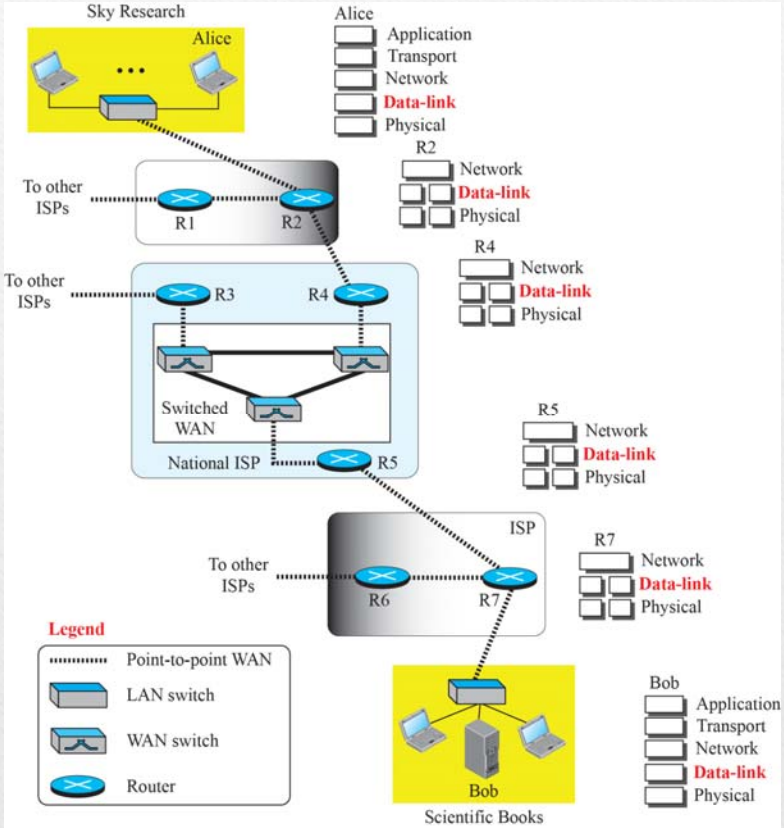

Nodes and Links

- Communication at the data-link layer is node-to-node.
- A data unit from one point on the Internet needs to pass through many networks (LANs and WANs) to reach another point. Theses LANs and WANs are connected by routers.
- It is customary to refer to the two end hosts and the routers as nodes and the networks in between as links.

Nodes and Links (Contd.)

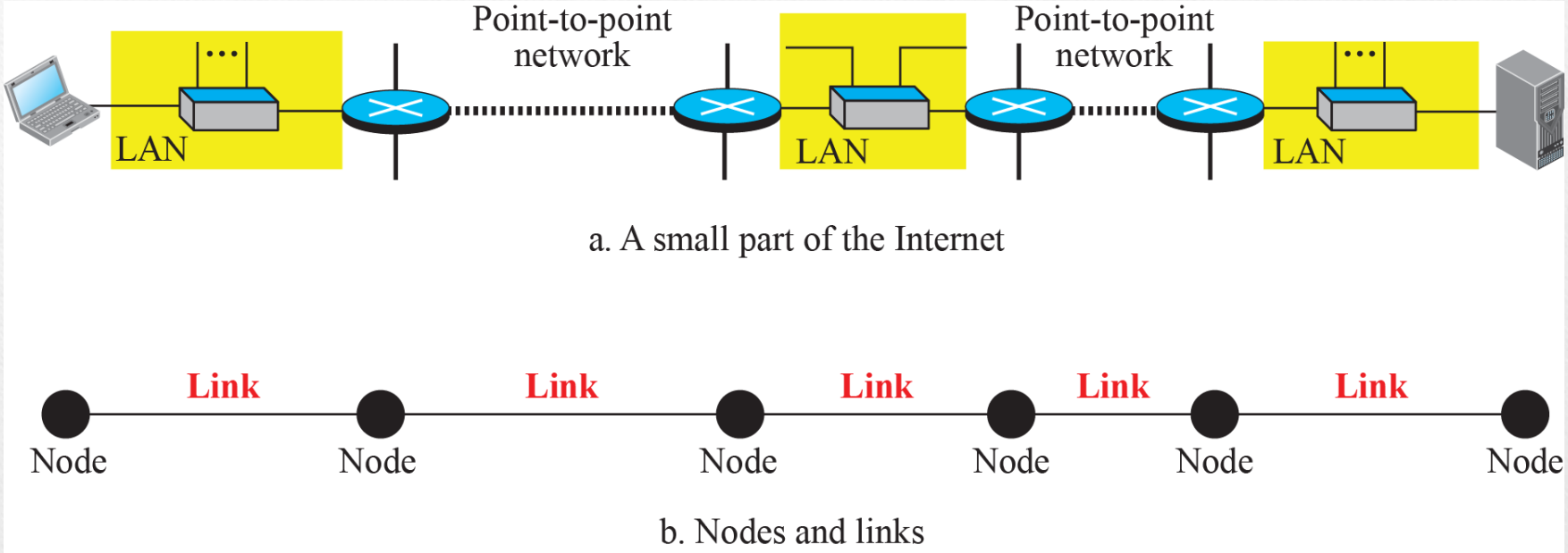

Services

- The data-link layer is located between the physical and the network layers. The data-link layer provides services to the network layer; it receives services from the physical layer. Let us discuss services provided by the data-link layer.

A communication with only three nodes

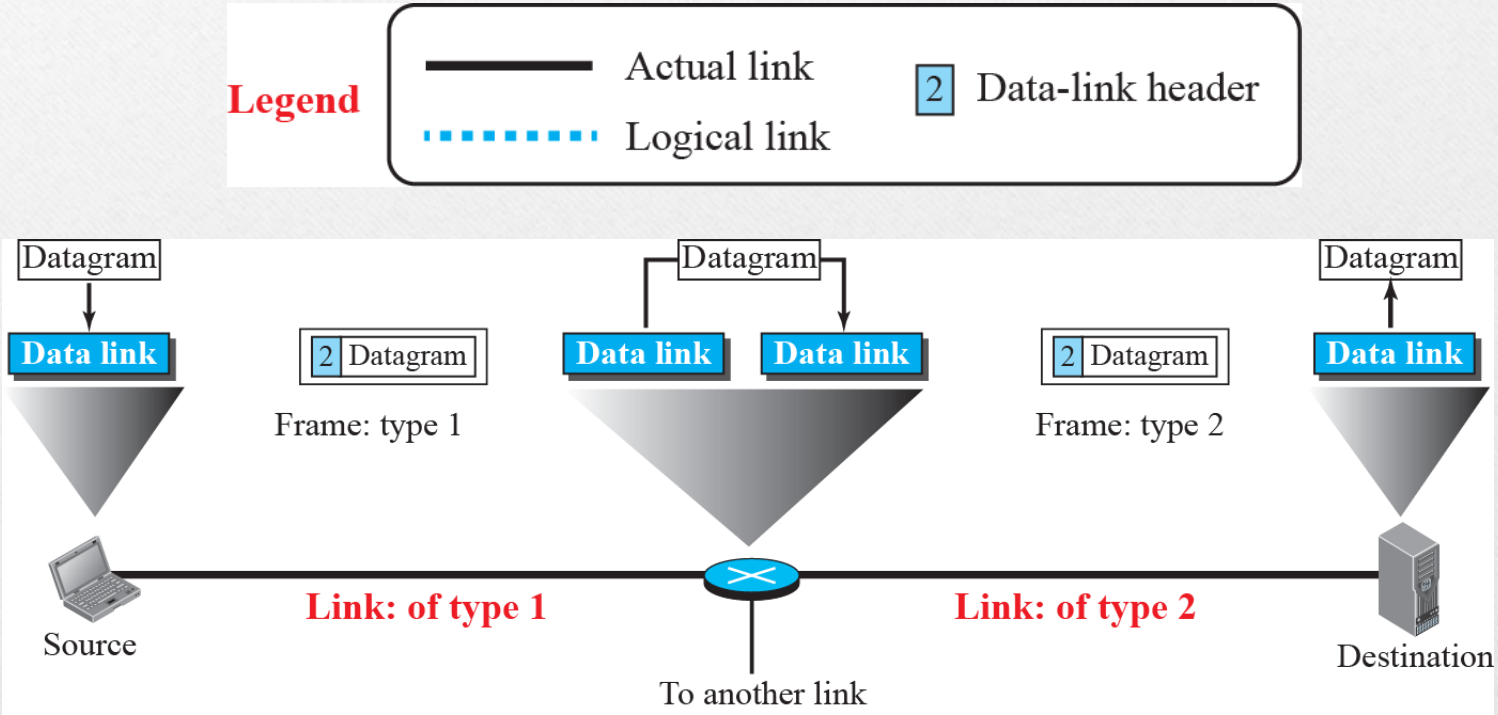

Two Categories of Links

- Although two nodes are physically connected by a transmission medium such as cable or air, we need to remember that the data-link layer controls how the medium is used.
- We can have a data-link layer that uses the whole capacity of the medium; we can also have a data-link layer that uses only part of the capacity of the link. In other words, we can have a point-to-point link or a broadcast link.

Two Sublayers

- To better understand the functionality of and the services provided by the link layer, we can divide the data-link layer into two sublayers:
  - Data link control (DLC)
  - Media access control (MAC).

Dividing the data-link layer into two sublayers

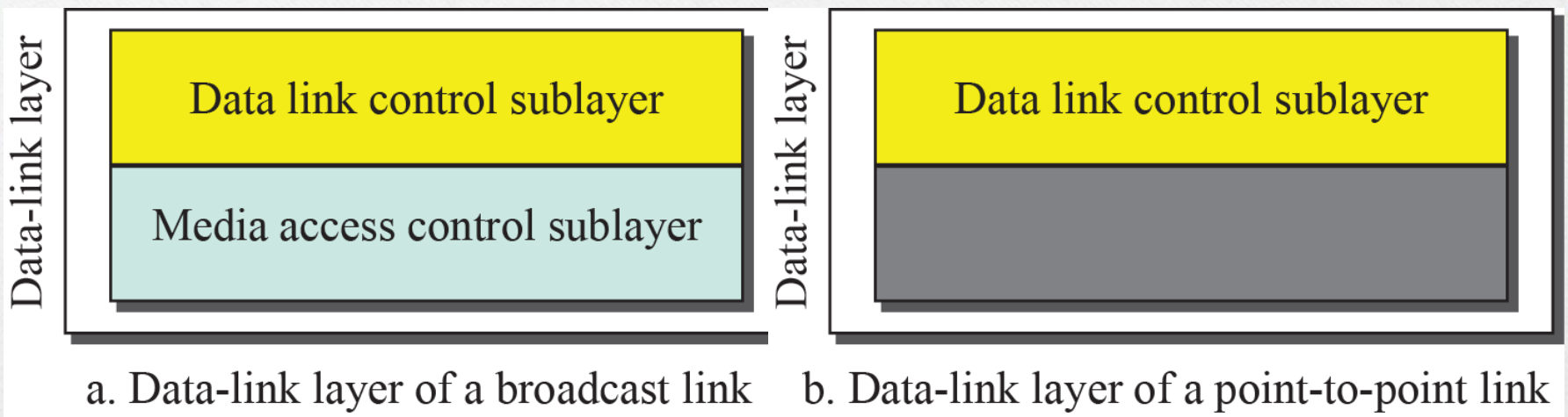

Link Layer Addressing

- IP addresses used as the identifiers at the network layer.
- However, in an internetwork such as the Internet we cannot make a datagram reach its destination using only IP addresses.
- The source and destination IP addresses define the two ends but cannot define which links the packet should pass through.

IP addresses and link-layer addresses in a small internet

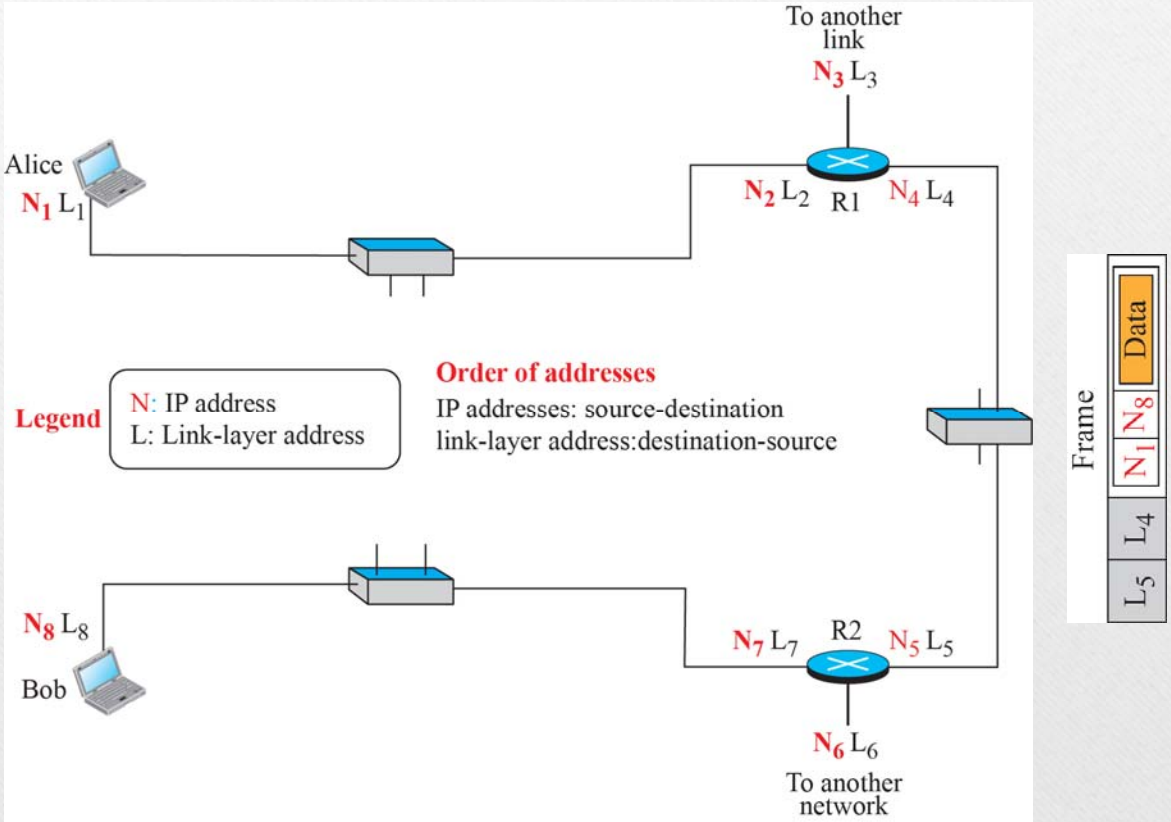

Three Types of addresses

- Some link-layer protocols define three types of addresses:
  - Unicast
  - Multicast
  - Broadcast

Unicast

- The unicast link-layer addresses in the most common LAN, Ethernet, are 48 bits (six bytes) that are presented as 12 hexadecimal digits separated by colons
- For example, the following is a link-layer address of a computer. The second digit needs to be an odd number.

A3:34:45:11:92:F1

Multicast

- The multicast link-layer addresses in the most common LAN, Ethernet, are 48 bits (six bytes) that are presented as 12 hexadecimal digits separated by colons.
- The second digit, however, needs to be an even number in hexadecimal. The following shows a multicast address:

A2:34:45:11:92:F1

Broadcast

- the broadcast link-layer addresses in the most common LAN, Ethernet, are 48 bits, all 1s, that are presented as 12 hexadecimal digits separated by colons.
- The following shows a broadcast address:

FF:FF:FF:FF:FF:FF

Address Resolution Protocol

- Anytime a node has an IP datagram to send to another node in a link, it has the IP address of the receiving node.
- However, the IP address of the next node is not helpful in moving a frame through a link; we need the link-layer address of the next node.
- This is the time when the Address Resolution Protocol (ARP) becomes helpful.

Position of ARP in TCP/IP protocol suite

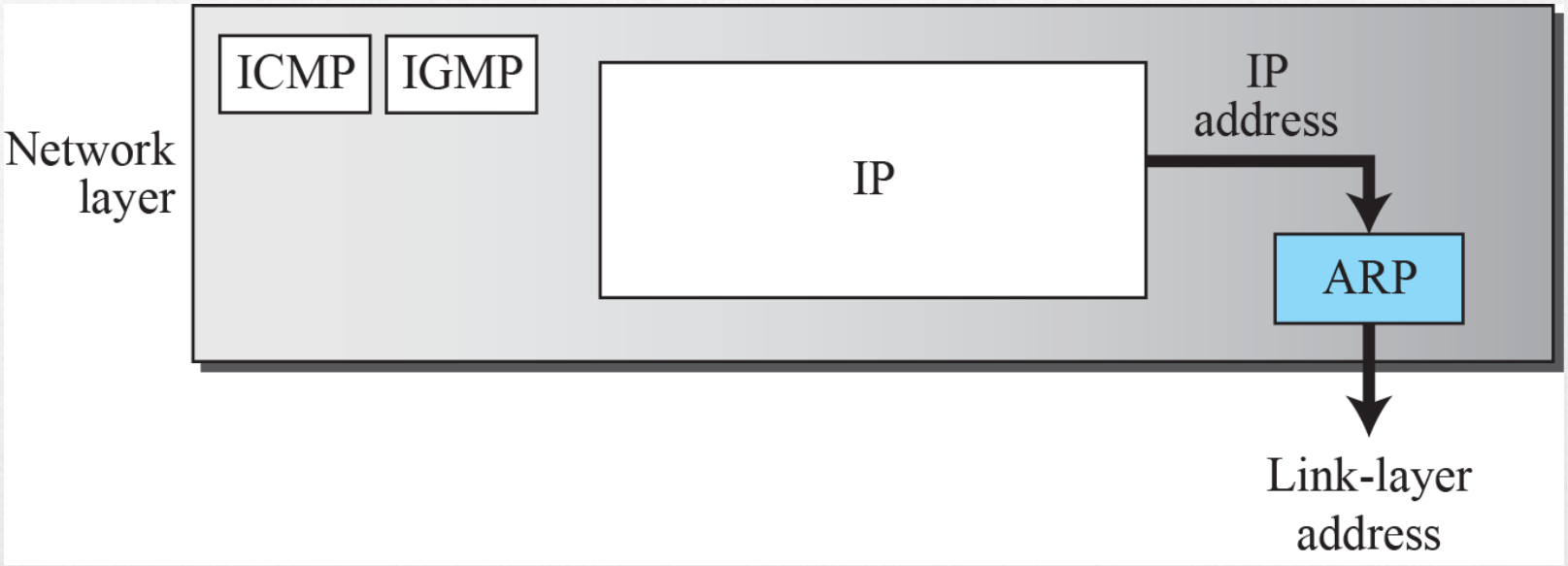

ARP Operation

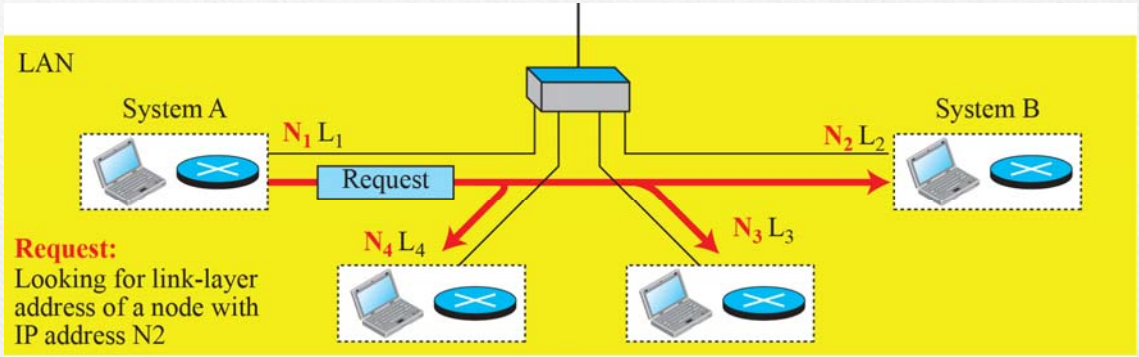

a. ARP request is broadcast

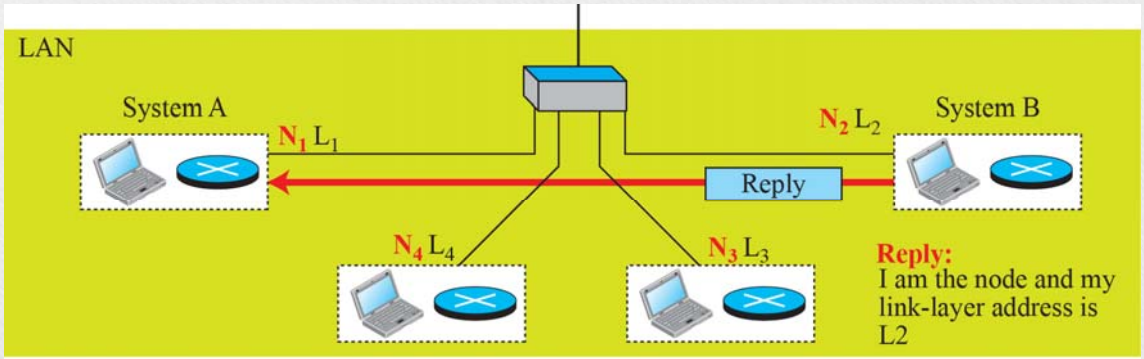

b. ARP reply is unicast

ARP Packet

Hardware: LAN or WAN protocol
Protocol: Network-layer protocol

0	8	16 31
Hardware Type		Protocol Type
Hardware length	Protocol length	Operation **Request:1, Reply:2**
Source hardware address		
Source protocol address		
Destination hardware address (Empty in request)		
Destination protocol address		

Example

- A host with IP address N1 and MAC address L1 has a packet to send to another host with IP address N2 and physical address L2 (which is unknown to the first host). The two hosts are on the same network

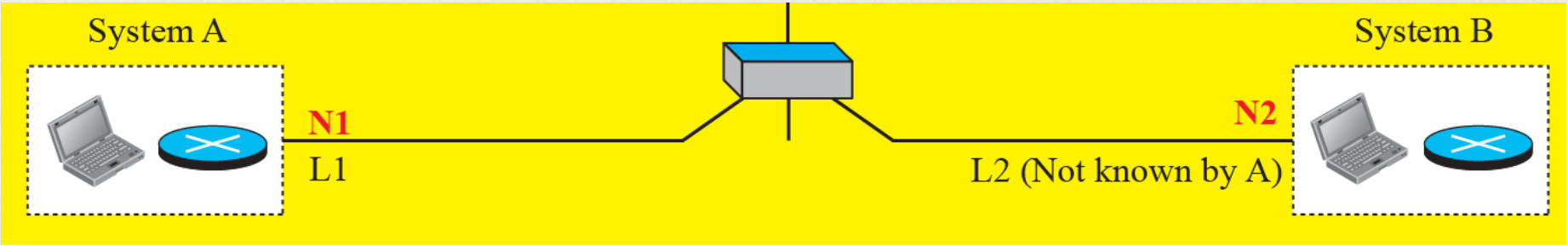

Example (Contd.)

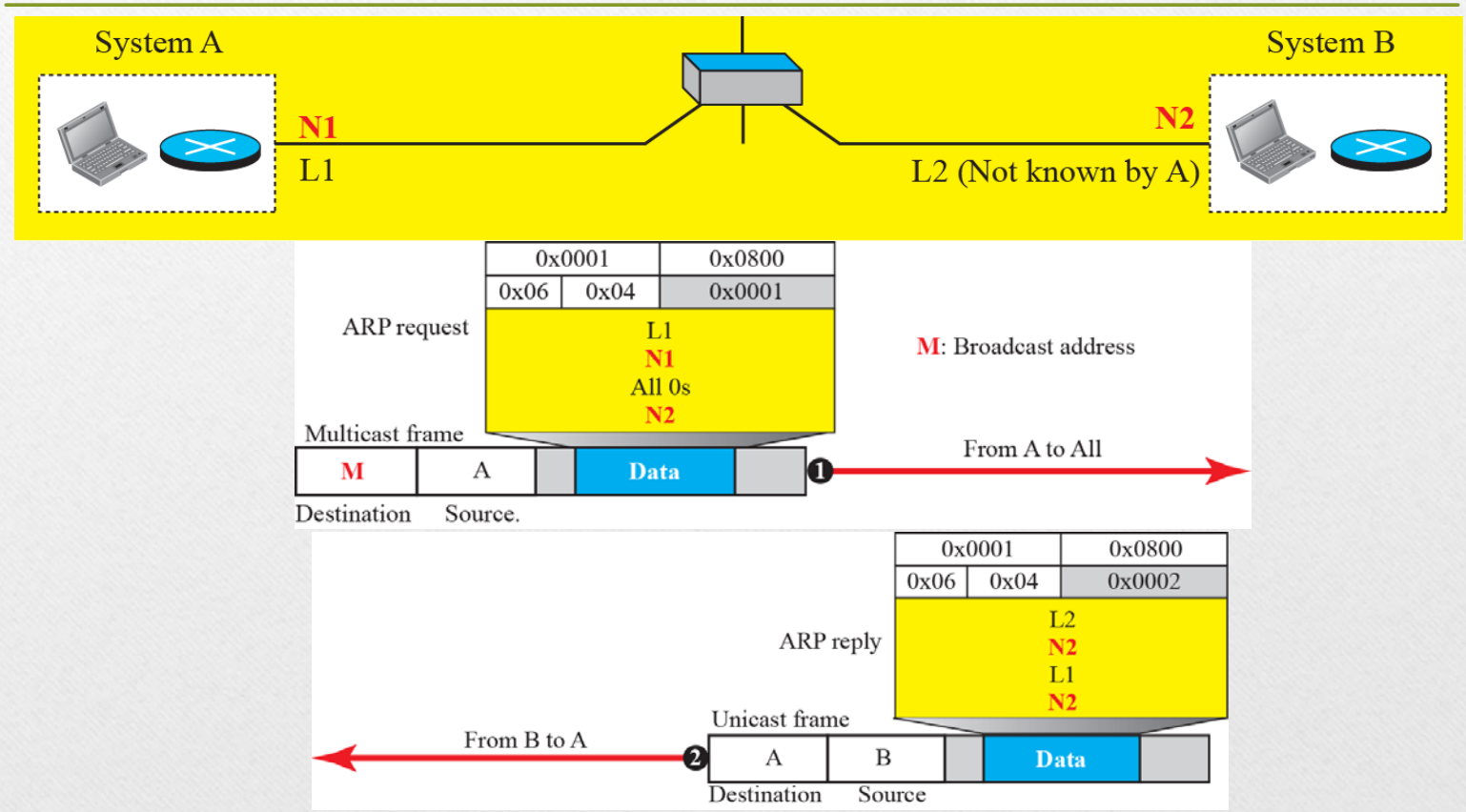

The internet for the example

Flow of packets at Alice site

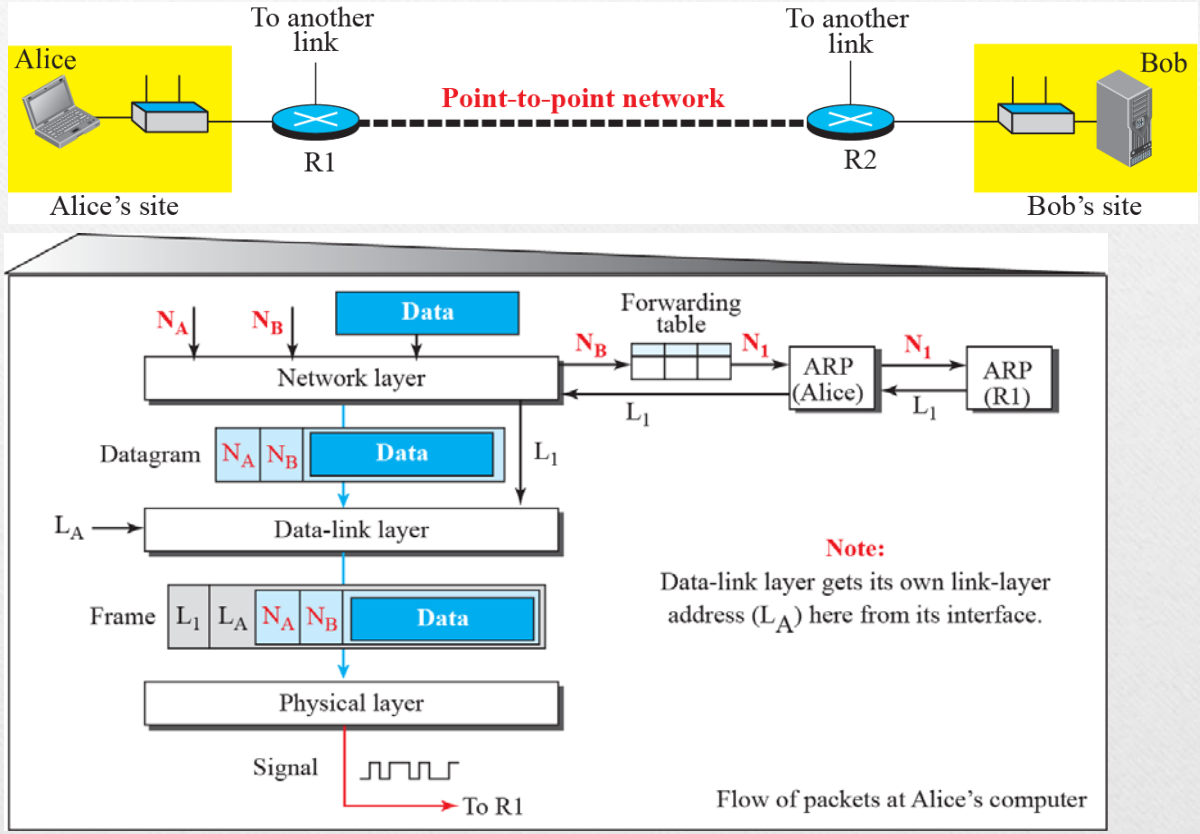

Flow of activities at router R1

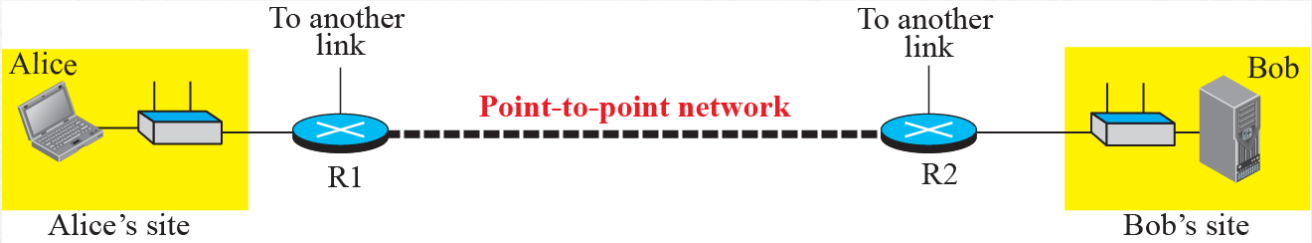

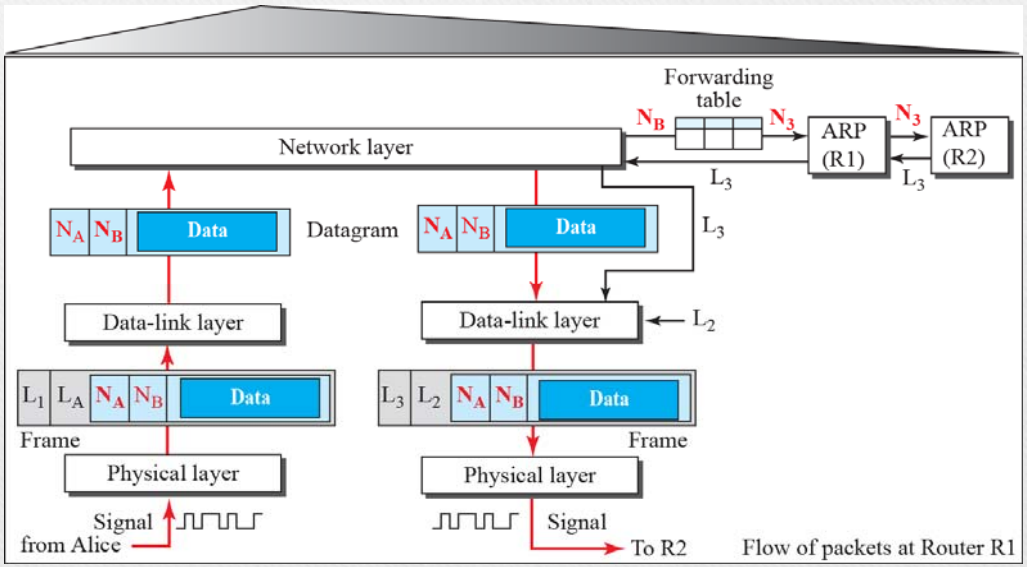

Flow of activities at router R2

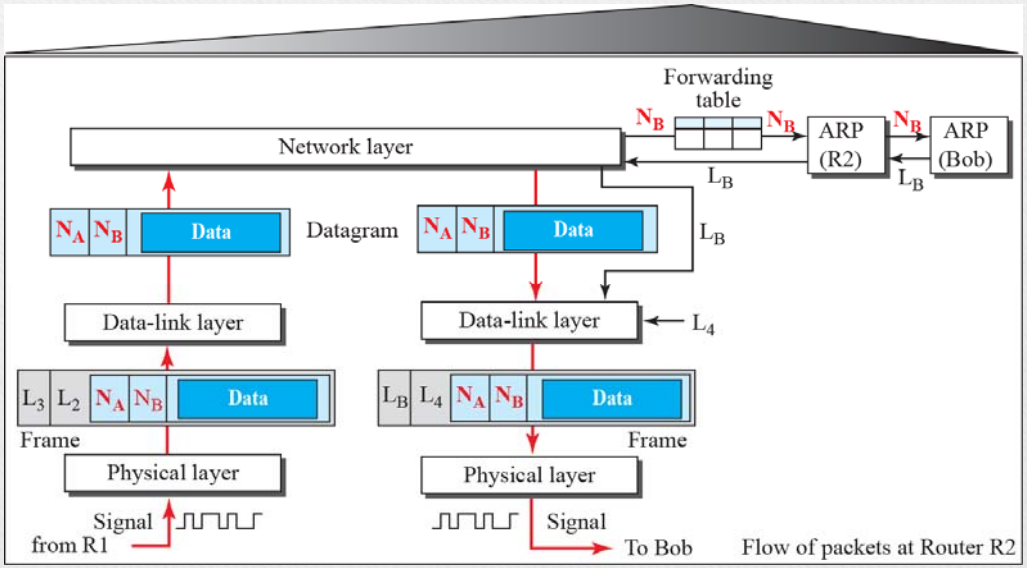

Activities at Bob's site

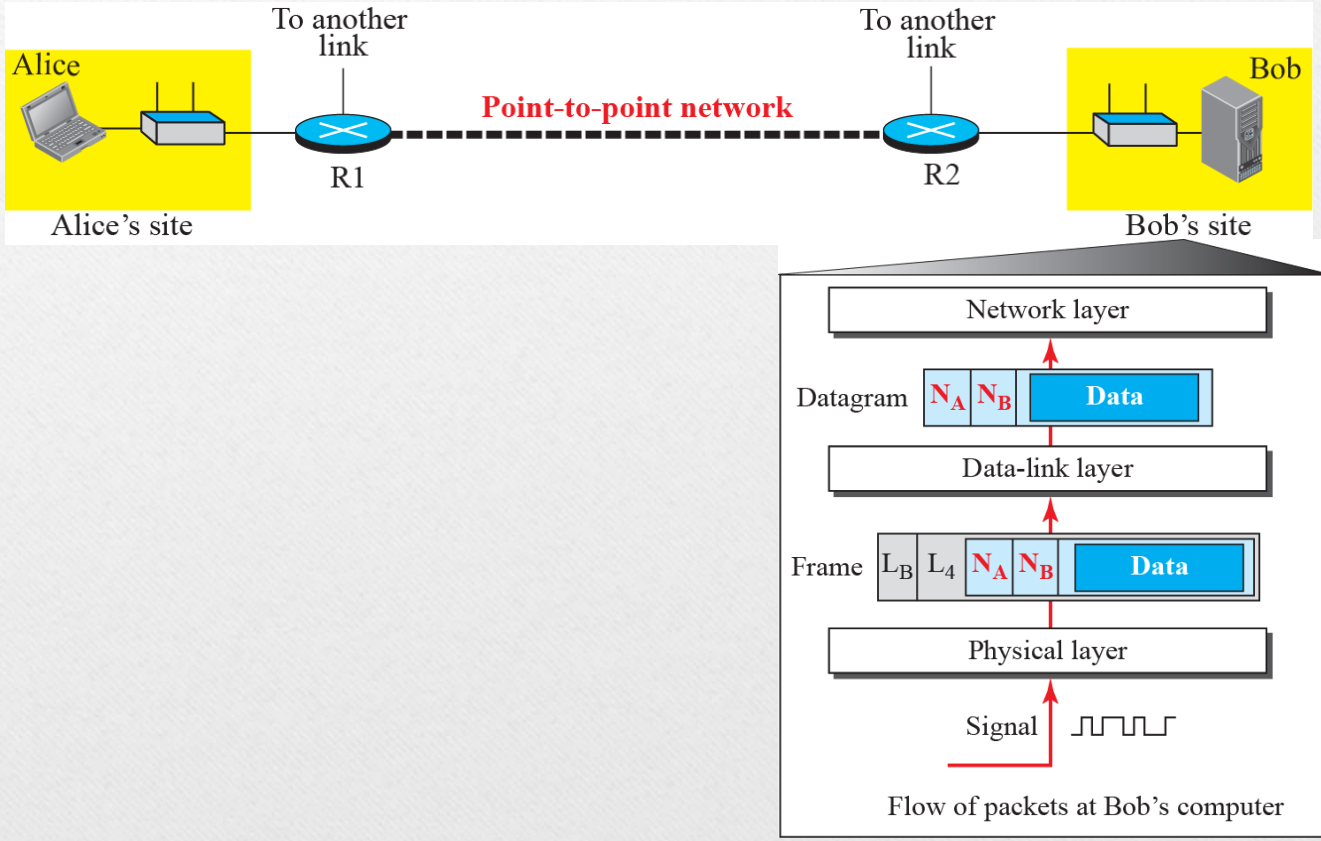

Next Class

- Error Detection and Correction

?

ayanm@iiti.ac.in

Room No. 407, POD-1A