CS 306: Data Link Control

Dr. Ayan Mondal

Assistant Professor

Dept. of CSE, IIT Indore

https://www.iiti.ac.in/people/~ayanm/

Outline

- Data Link Control Services
- Data Link Control Protocols
- High-Level Data Link Control
- Point-to-Point Protocol

Data Link Control Services

- The data link control (DLC) deals with procedures for communication between two adjacent nodes no matter whether the link is dedicated or broadcast.
- Data link control functions include framing and flow and error control.

Framing

- The data-link layer needs to pack bits into frames, so that each frame is distinguishable from another.
  - Our postal system practices a type of framing.
  - The simple act of inserting a letter into an envelope separates one piece of information from another; the envelope serves as the delimiter.
- Framing in the data-link layer separates a message from one source to a destination by adding a sender address and a destination address.
  - The destination address defines where the packet is to go; the sender address helps the recipient acknowledge the receipt.

A frame in a character-oriented protocol

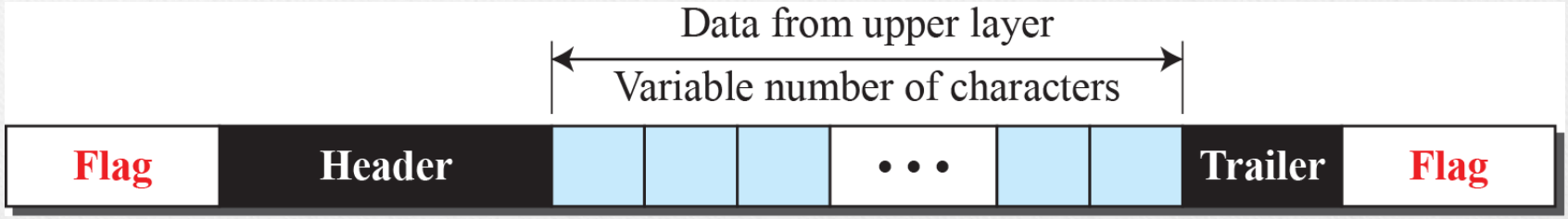

Byte stuffing and unstuffing

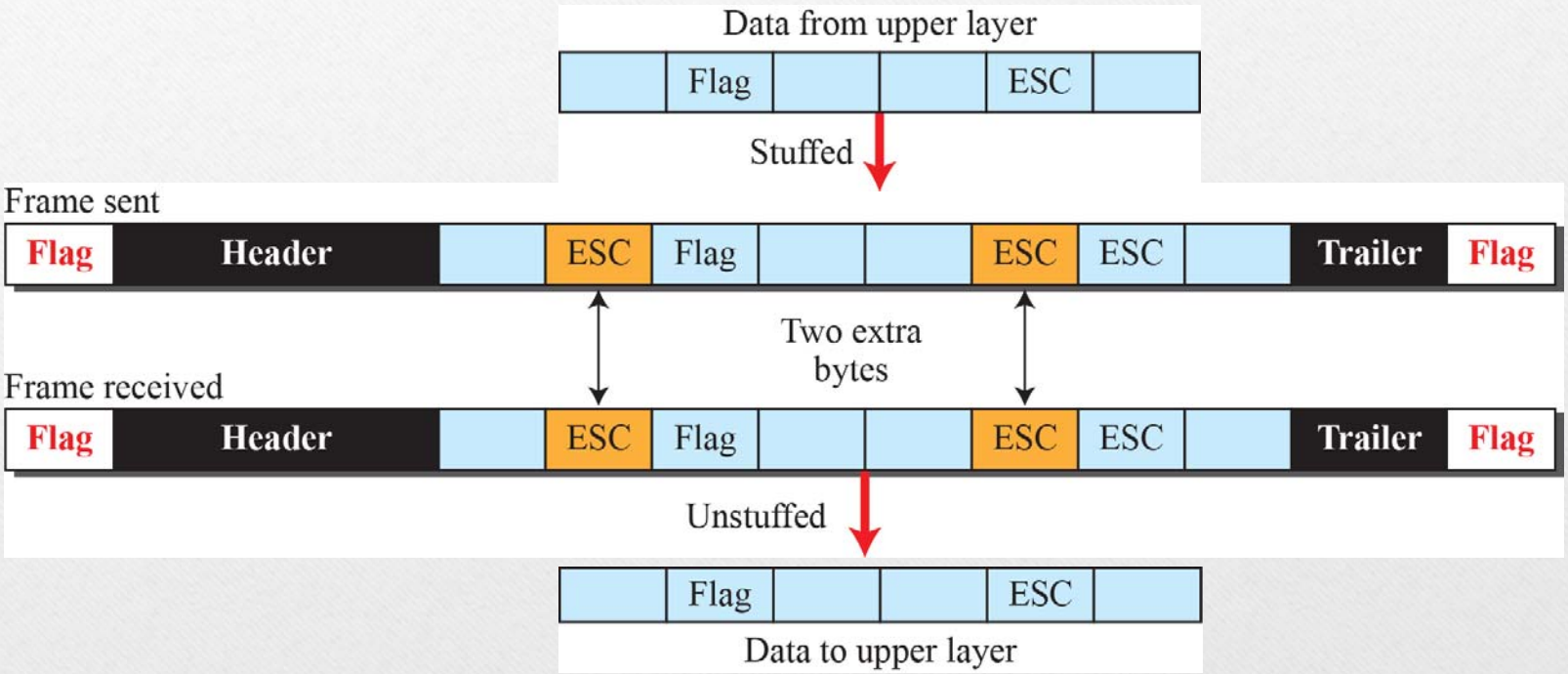

A frame in a bit-oriented protocol

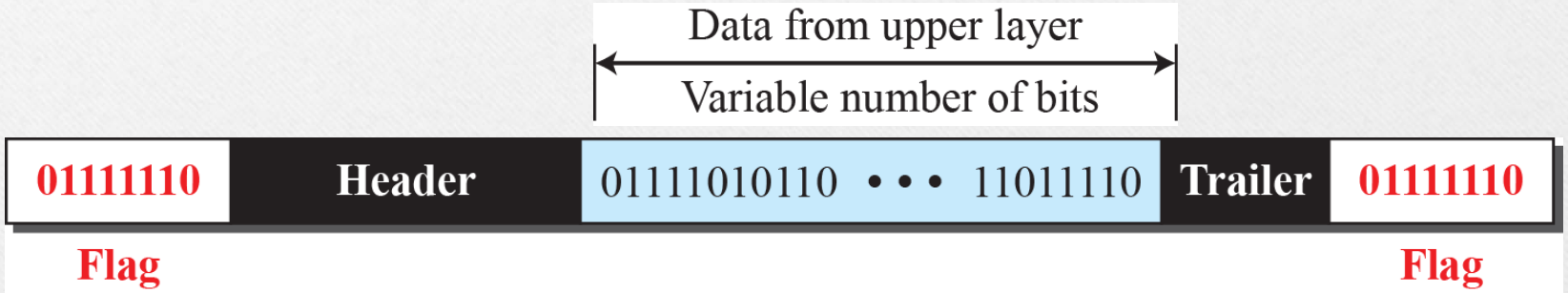

Bit stuffing and unstuffing

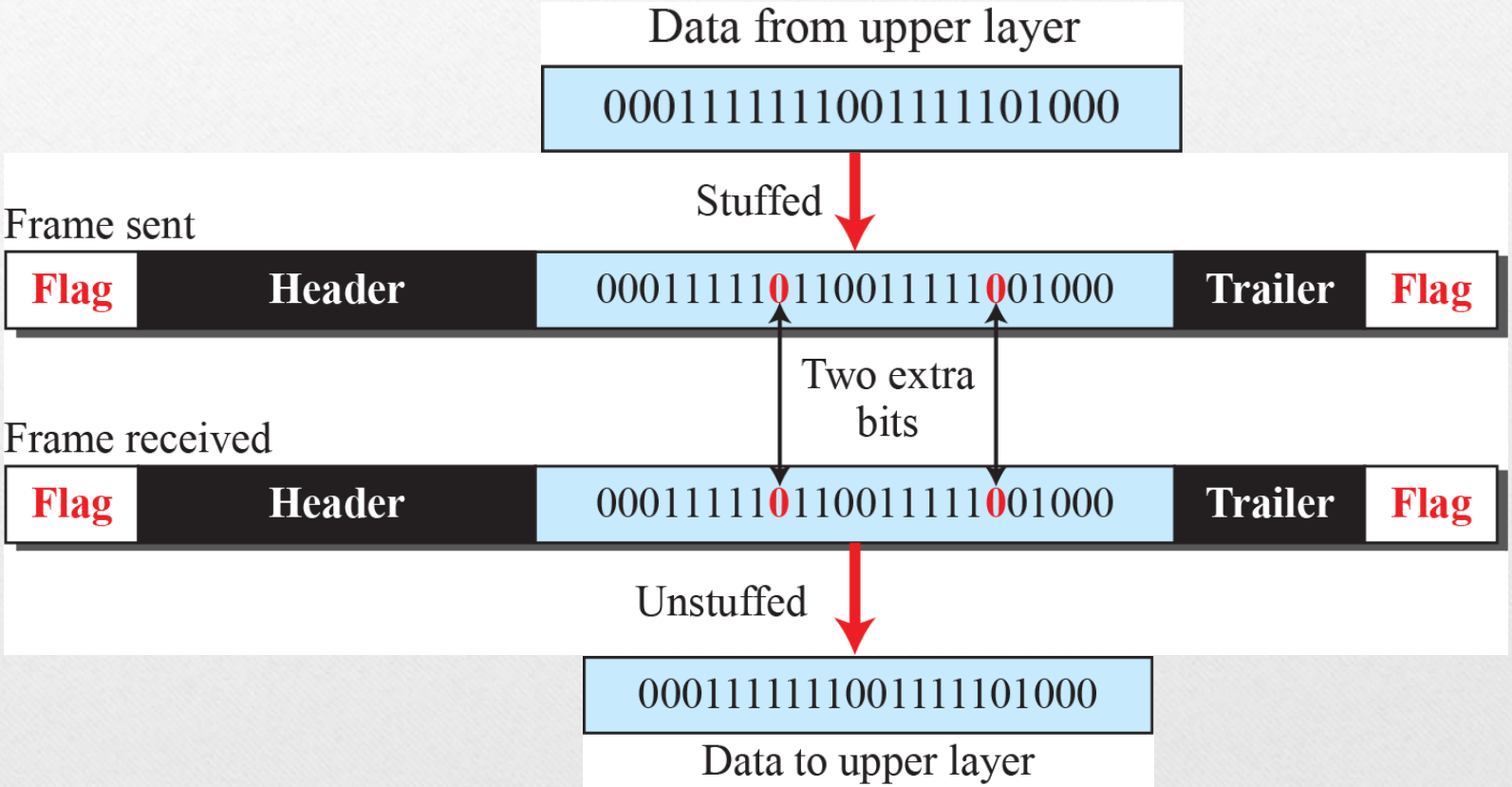

Flow and Error Control

- One of the responsibilities of the data-link control sublayer is flow and error control at the data-link layer.

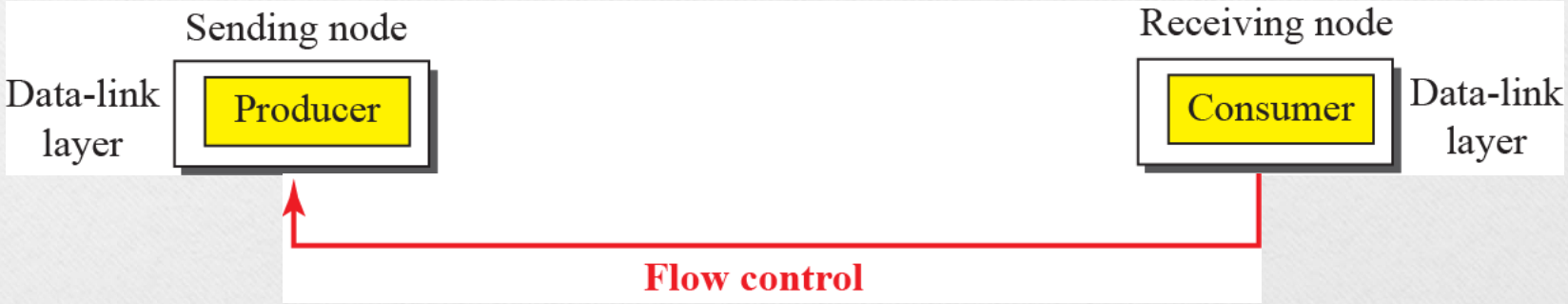

Example

- If the two parties use a buffer with only one slot, the communication can be easier.
- Assume that each data-link layer uses one single memory slot to hold a frame.
- When this single slot in the receiving data-link layer is empty, it sends a note to the network layer to send the next frame.

Connection

- A DLC protocol can be either connectionless or connection-oriented.

Data Link Layer Protocols

- Traditionally four protocols have been defined for the data-link layer to deal with flow and error control:
  - Simple
  - Stop-and-Wait
  - Go-Back-N
  - Selective-Repeat
- The first two protocols still are used at the data-link layer, the last two have disappeared.

Simple Protocol

- We assume that the receiver can immediately handle any frame it receives.
- In other words, the receiver can never be overwhelmed with incoming frames.

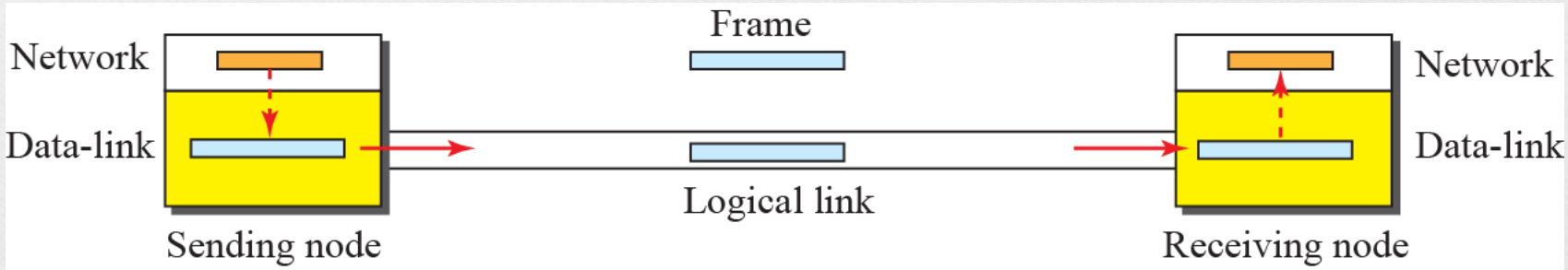

Example

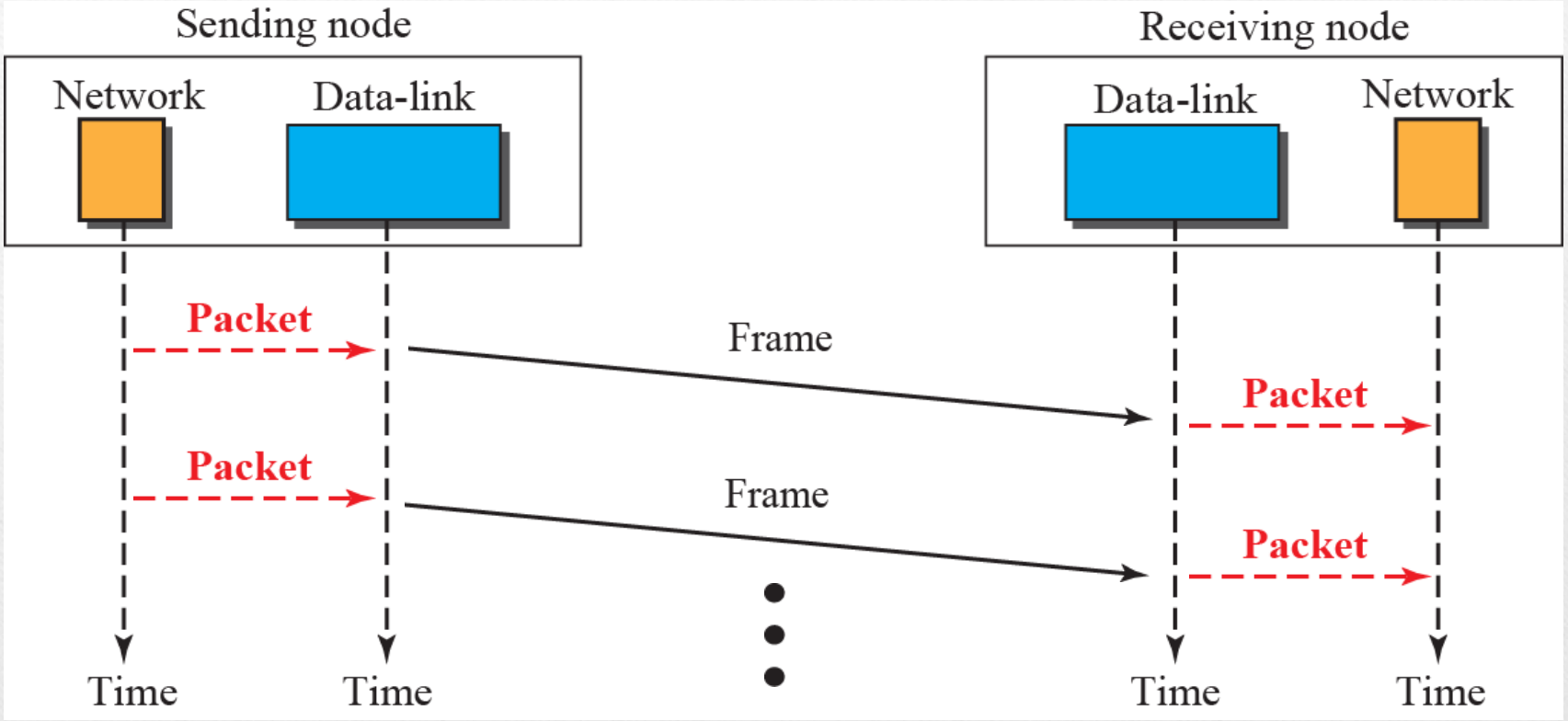
Sending node
Network
Data-link
Receiving node
Data-link
Network
Packet
Frame
Packet
Packet
Frame
Packet
Time
Time
Time
Time

Stop-and-Wait Protocol

- Stop-and-Wait protocol uses both flow and error control
- In this protocol, the sender sends one frame at a time and waits for an acknowledgment before sending the next one

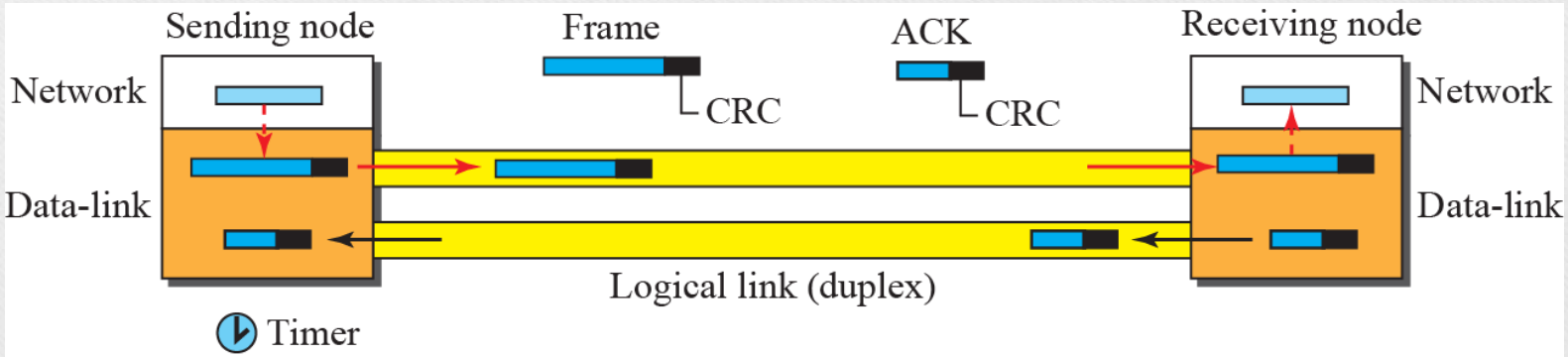

Example

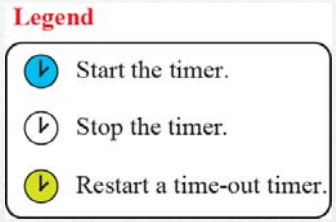

Notes:
A lost frame means either lost or corrupted.
A lost ACK means either lost or corrupted.

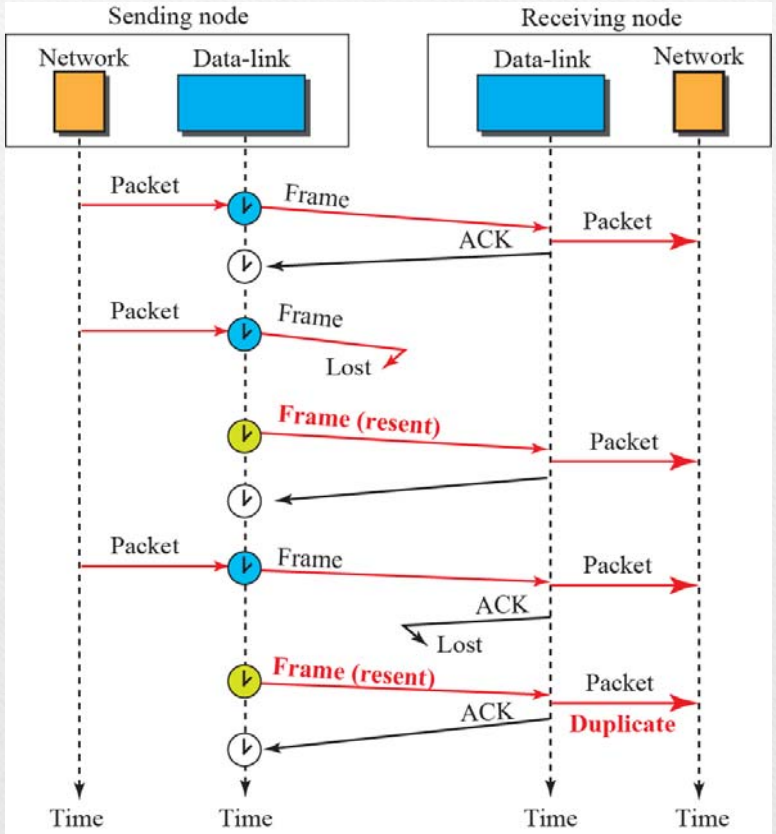

Example (Contd.)

- The first frame is sent and acknowledged.
- The second frame is sent and lost. After time-out, it is resent.
- The third frame is sent and acknowledged, but the acknowledgment is lost. The frame is resent.
- However, there is a problem with this scheme. The network layer at the receiver site receives two copies of the third packet, which is not right.

Example (Contd.)

- Adding sequence numbers and acknowledgment numbers can prevent duplicates.

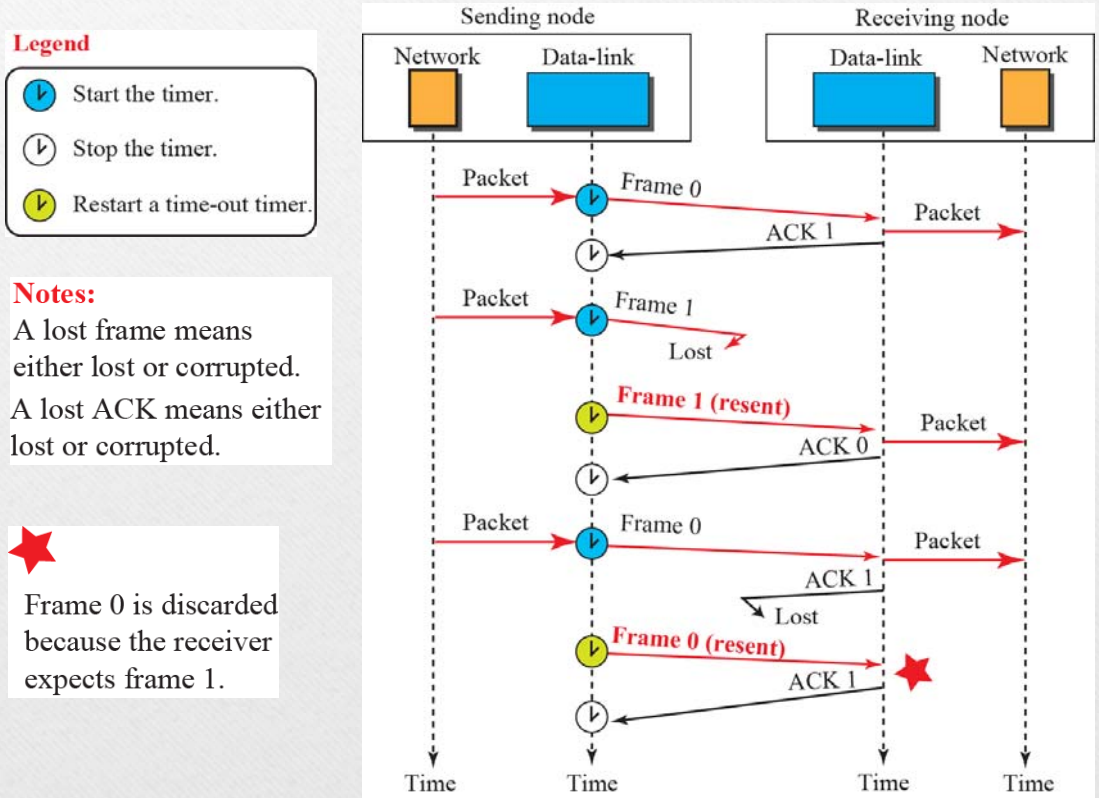

Piggybacking

- The two protocols we discussed are designed for unidirectional communication, although the acknowledgment may travel in the other direction.
- Protocols have been designed in the past to allow data to flow in both directions. However, to make the communication more efficient, the data in one direction is piggybacked with the acknowledgment in the other direction.

High-level Data Link Control

- High-level Data Link Control (HDLC) is a bit - oriented protocol for communication over point-to-point and multipoint links.
- It implements the Stop-and-Wait protocol we discussed earlier.
- This protocol is more a theoretical issue than practical, most of the concept defined in this protocol is the basis for other practical protocols such as PPP, Ethernet, or wireless LANs

Transfer Modes

- HDLC provides two common transfer modes that can be used in different configurations:
  - Normal response mode (NRM)
  - Asynchronous balanced mode (ABM).

Normal response mode

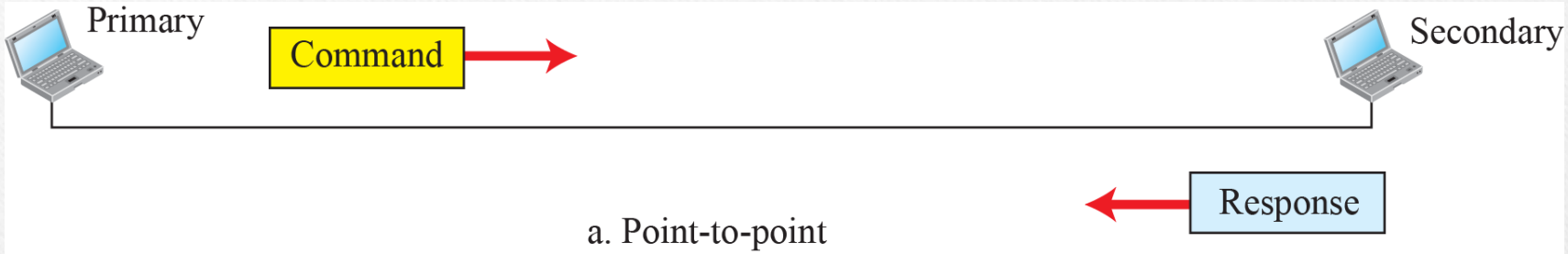

a. Point-to-point

b. Multipoint

Asynchronous balanced mode

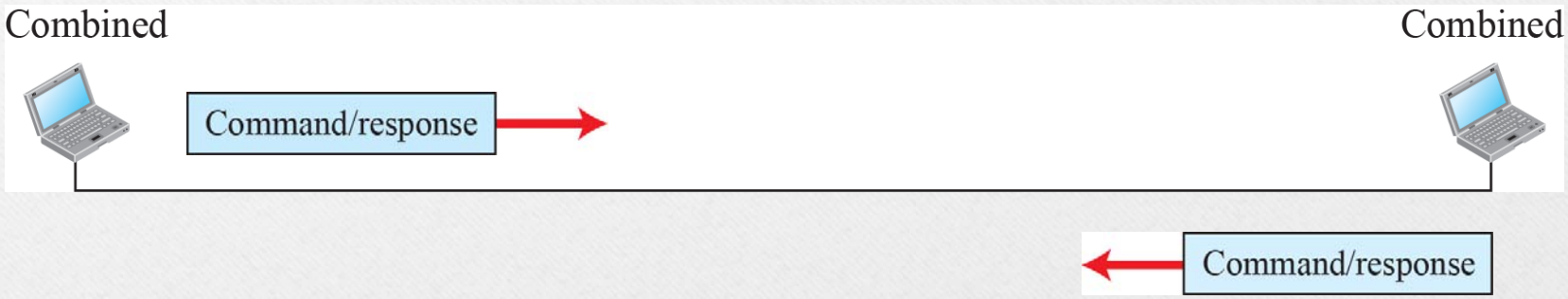

Framing

- To provide the flexibility necessary to support all the options possible in the modes and configurations just described, HDLC defines three types of frames:
  - Information frames (I-frames)
  - Supervisory frames (S-frames)
  - Un-numbered frames (U-frames)

HDLC frames

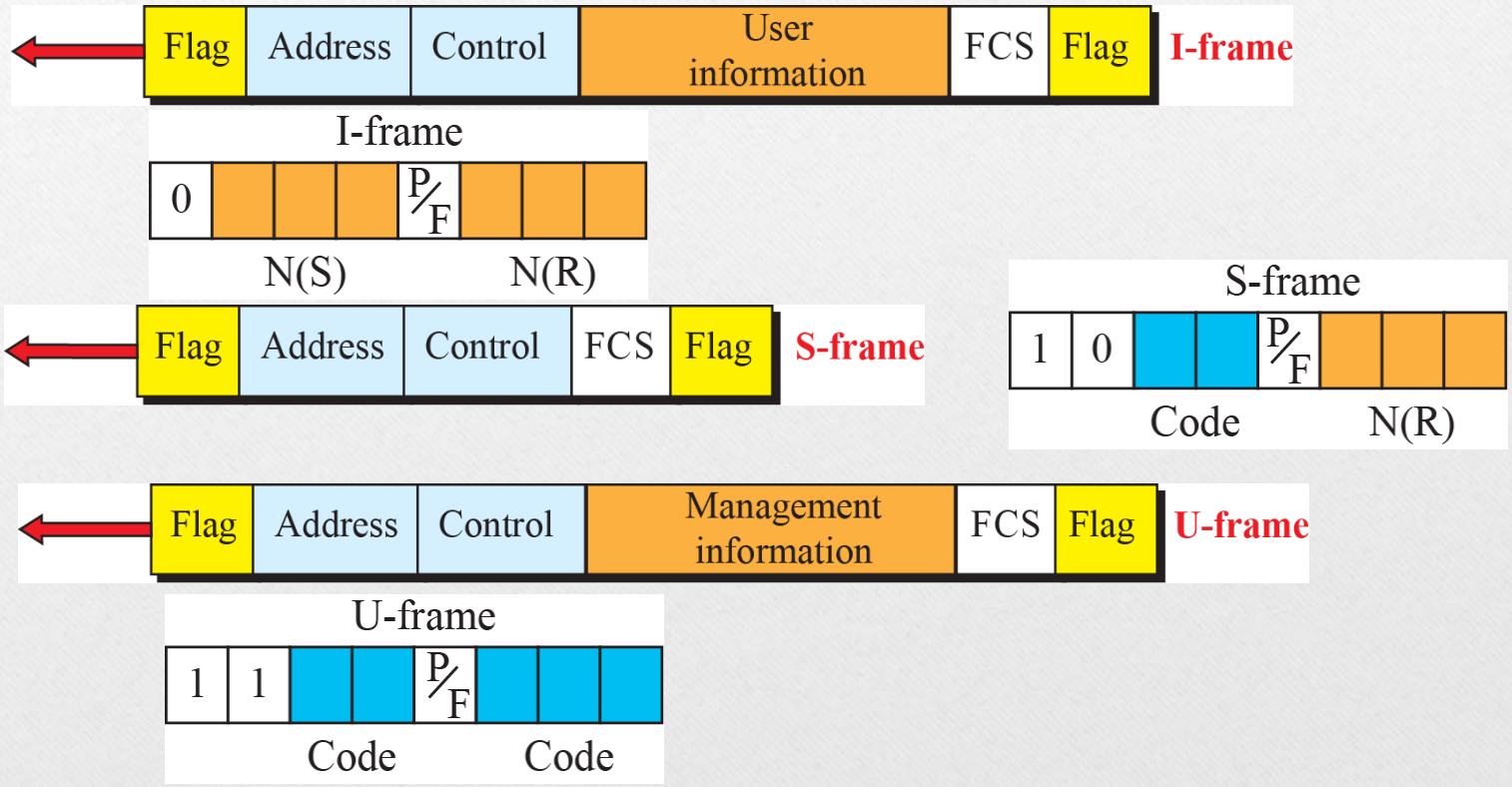
Flag
Address
Control
User information
FCS
Flag
I-frame
I-frame
0
P/F
N(S)
N(R)
Flag
Address
Control
FCS
Flag
S-frame
S-frame
1
0
P/F
Code
N(R)
Flag
Address
Control
Management information
FCS
Flag
U-frame
U-frame
1
1
P/F
Code
Code

Point-to-Point Protocol

- One of the most common protocols for point-to-point access is the Point-to-Point Protocol (PPP).
- Today, millions of Internet users who need to connect their home computers to the server of an Internet service provider use PPP.
- To control and manage the transfer of data, there is a need for a point-to-point protocol at the data-link layer.
- PPP is by far the most common

Next Class

- Media Access Control

?

ayanm@iiti.ac.in

Room No. 407, POD-1A