CS 306: Wired Networks

Dr. Ayan Mondal

Assistant Professor

Dept. of CSE, IIT Indore

https://www.iiti.ac.in/people/~ayanm/

Outline

- Ethernet
- Telephone Networks
- Cable Networks

Introduction

- In 1985, the Computer Society of the IEEE started a project, called Project 802, to set standards to enable intercommunication among equipment from a variety of manufacturers.

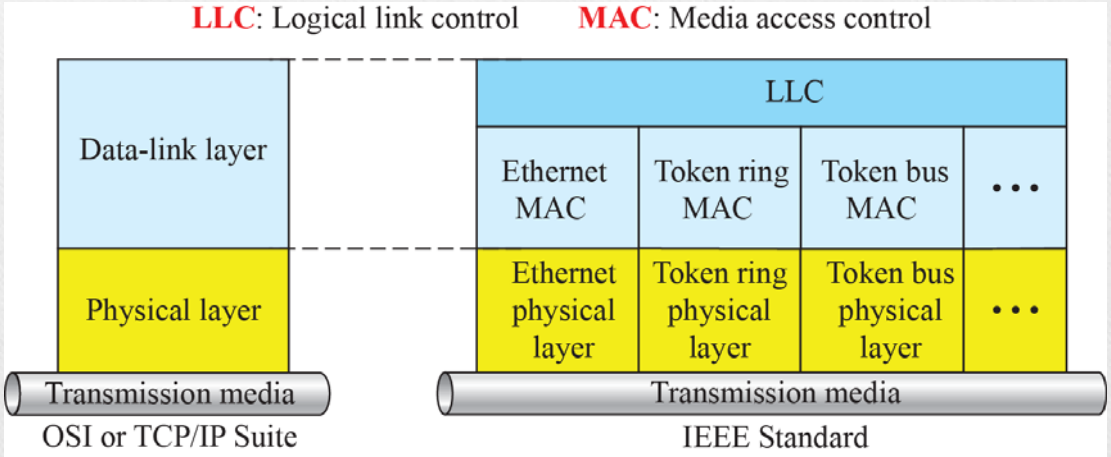

Ethernet evolution

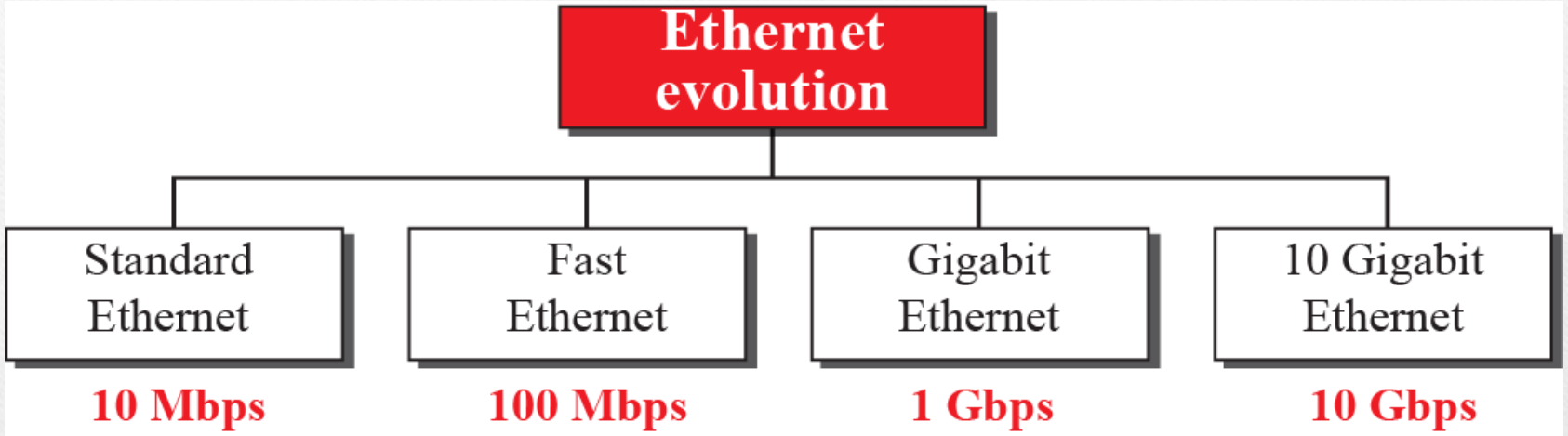

Standard Ethernet

- We refer to the original Ethernet technology with the data rate of 10 Mbps as the Standard Ethernet.
- There are some features of the Standard Ethernet that have not changed during the evolution.

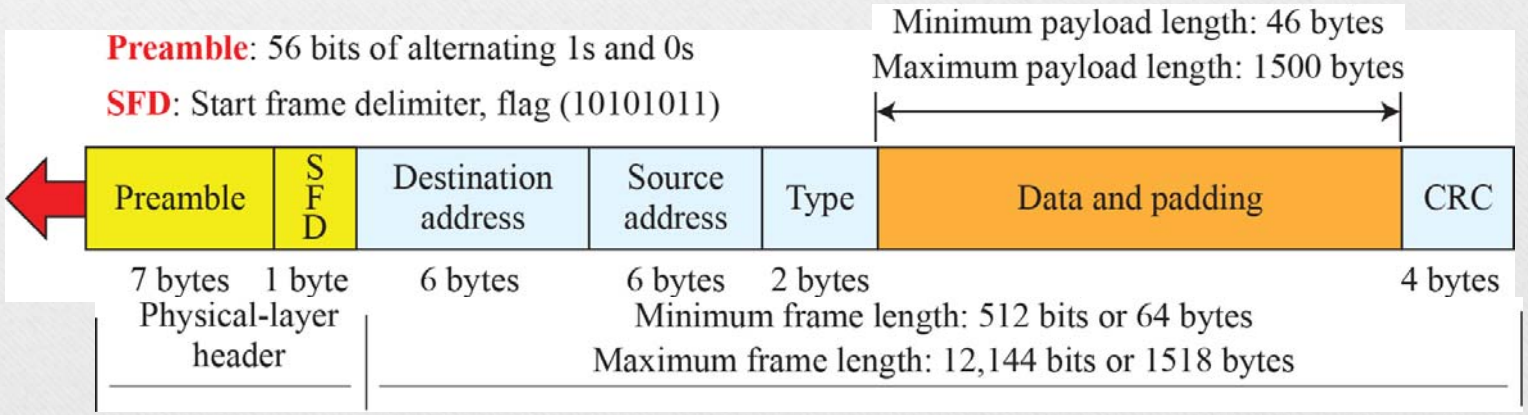

Example

- Show how the address 47:20:1B:2E:08:EE is sent out online.
- Solution: The address is sent left to right, byte by byte; for each byte, it is sent right to left, bit by bit, as shown below:

Hexadecimal	47	20	1B	2E	08	EE
Binarys	01000111	00100000	00011011	00101110	00001000	11101110
Transmitted ←	11100010	00000100	11011000	01110100	00010000	01110111

Addressing

- Each station on an Ethernet network (such as a PC, workstation, or printer) has its own network interface card (NIC).
- The NIC fits inside the station and provides the station with a link-layer address. The Ethernet address is 6 bytes (48 bits), normally written in hexadecimal notation, with a colon between the bytes.

4A:30:10:21:10:1A

Unicast and multicast addresses

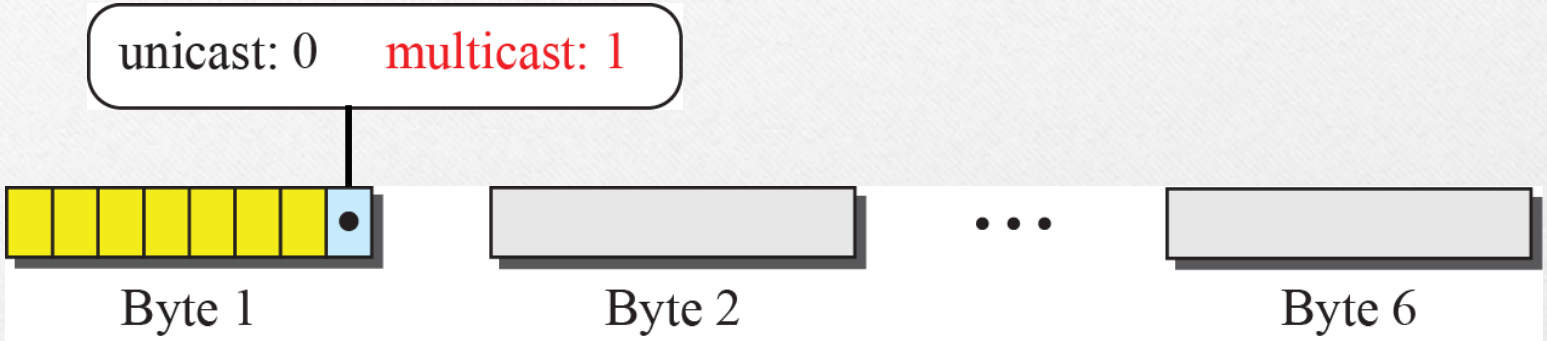

- Define the type of the following destination addresses:
  - 4A:30:10:21:10:1A
  - 47:20:1B:2E:08:EE
  - FF:FF:FF:FF:FF:FF

Access Method

- The standard Ethernet protocol is mostly used for a broadcast network
- We use an access method to control access to the sharing medium.
- The standard Ethernet chose CSMA/CD with 1-persistent method

Changes in the Standard

- Sharing bandwidth

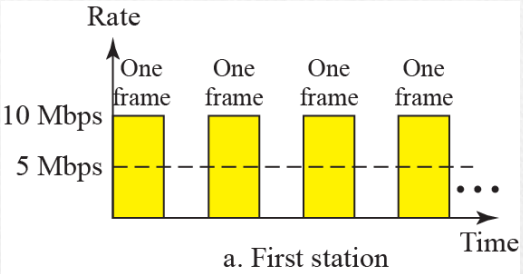

a. First station

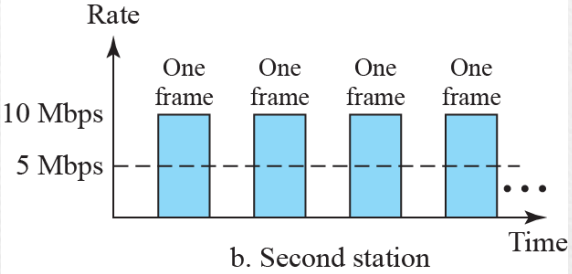

b. Second station

- Domains

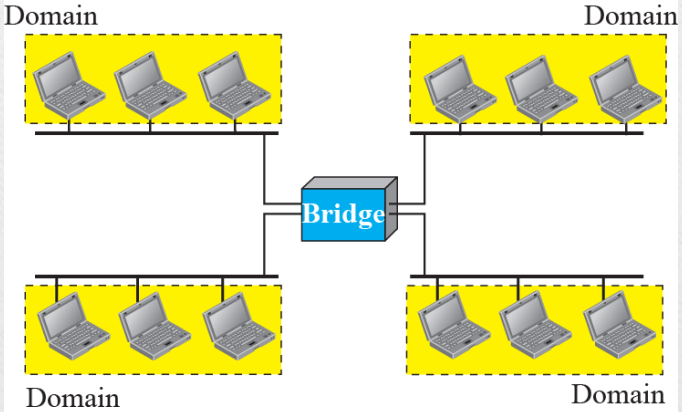

b. With bridging

Fast Ethernet

- In the 1990s, Ethernet made a big jump by increasing the transmission rate to 100 Mbps, and the new generation was called the Fast Ethernet.
- The MAC sublayer was left unchanged.
- However, the features of the Standard Ethernet that depend on the transmission rate, had to be changed.

Access Method

- The proper operation of the CSMA/CD depends on the transmission rate, the minimum size of the frame, and the maximum network length.
- If we want to keep the minimum size of the frame, the maximum length of the network should be changed.

Example

- If the minimum frame size is still 512 bits, and it is transmitted 10 times faster, the collision needs to be detected 10 times sooner
- Therefore, the maximum length of the network should be 10 times shorter (the propagation speed does not change).

Gigabit Ethernet

- The need for an even higher data rate resulted in the design of the Gigabit Ethernet Protocol (1000 Mbps).
- The IEEE committee calls it the Standard 802.3z.
- The goals of the Gigabit Ethernet were to upgrade the data rate to 1 Gbps, but keep the address length, the frame format, and the maximum and minimum frame length the same.
- Almost all implementations of Gigabit Ethernet follow the full-duplex approach

10 Gigabit Ethernet

- In recent years, there has been another look into the Ethernet for use in metropolitan areas – LAN and MAN (metropolitan area network).
- The IEEE committee created 10 Gigabit Ethernet and called it Standard 802.3ae.
- 10 Gigabit Ethernet operates only in full-duplex mode, which means there is no need for contention; CSMA/CD is not used in 10 Gigabit Ethernet.

Telephone

- The telephone network has several levels of switching offices such as end offices, tandem offices, and regional offices.

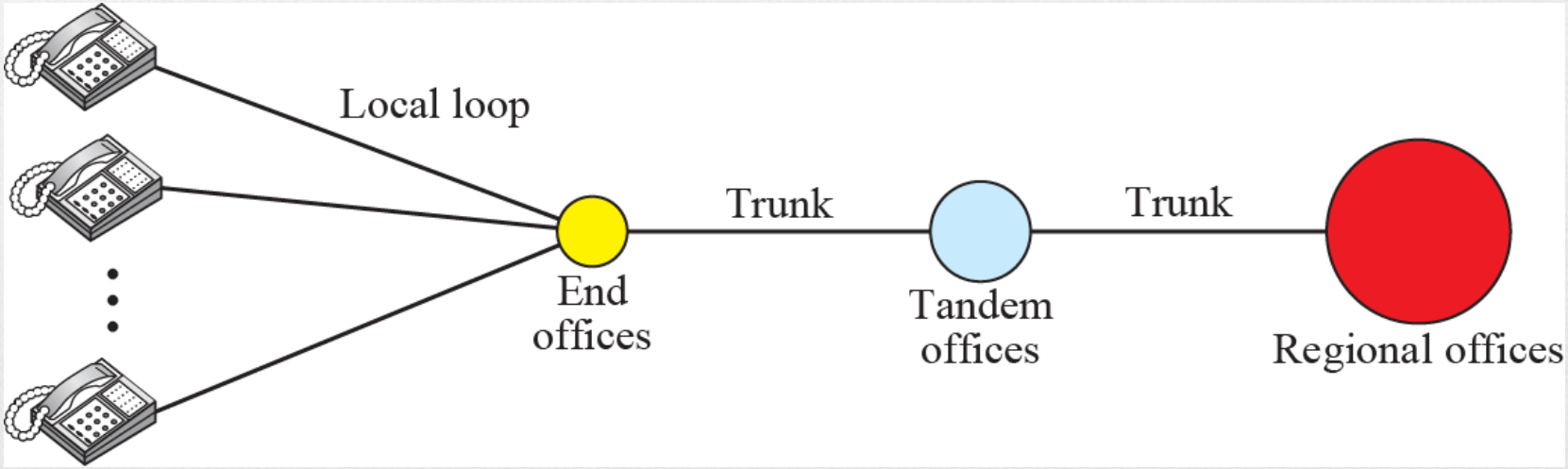

Signaling

- The telephone network, at its beginning, used a circuit-switched network with dedicated links to transfer voice communication.
- Later, the signaling system became automatic. Rotary telephones were invented that sent a digital signal defining each digit in a multi-digit telephone number.

Data transfer and signaling network

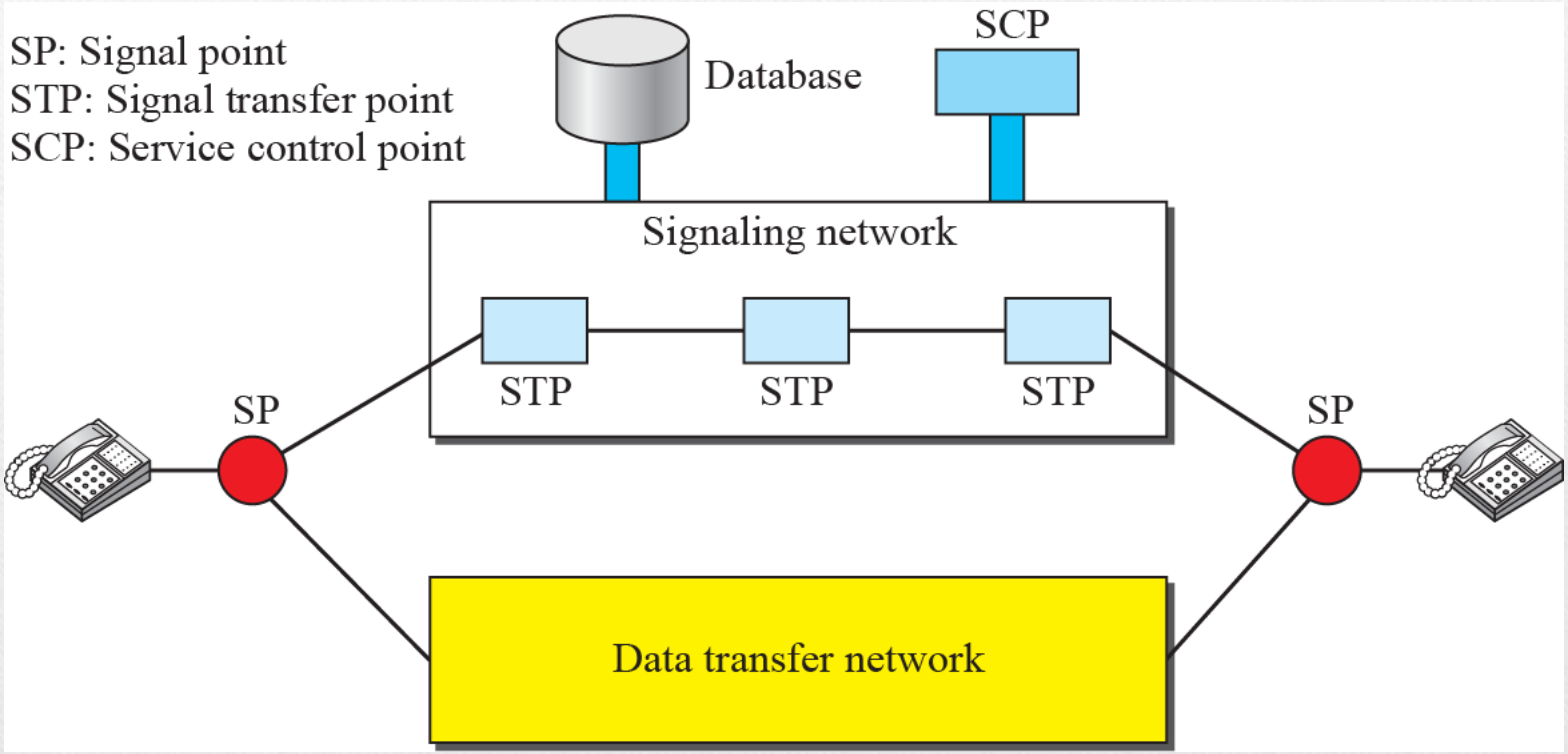

Cable networks

- The cable networks became popular with people who just wanted a better signal.
- In addition, cable networks enabled access to remote broadcasting stations via microwave connections.
- It was initially called community antenna television (CATV) because an antenna at the top of a tall hill or building received the signals from the TV stations and distributed them, via coaxial cables, to the community.

Traditional cable TV network

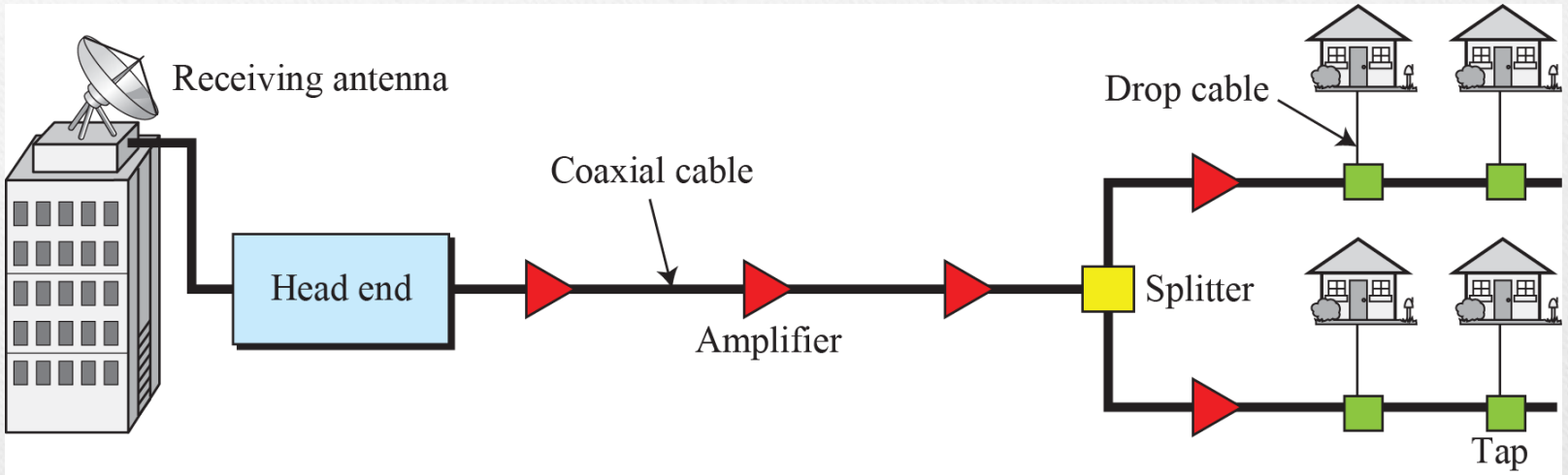

Hybrid fiber-coaxial network

- The transmission medium from the cable TV office to a box, called the fiber node, is optical fiber; from the fiber node through the neighborhood and into the house is still coaxial cable.

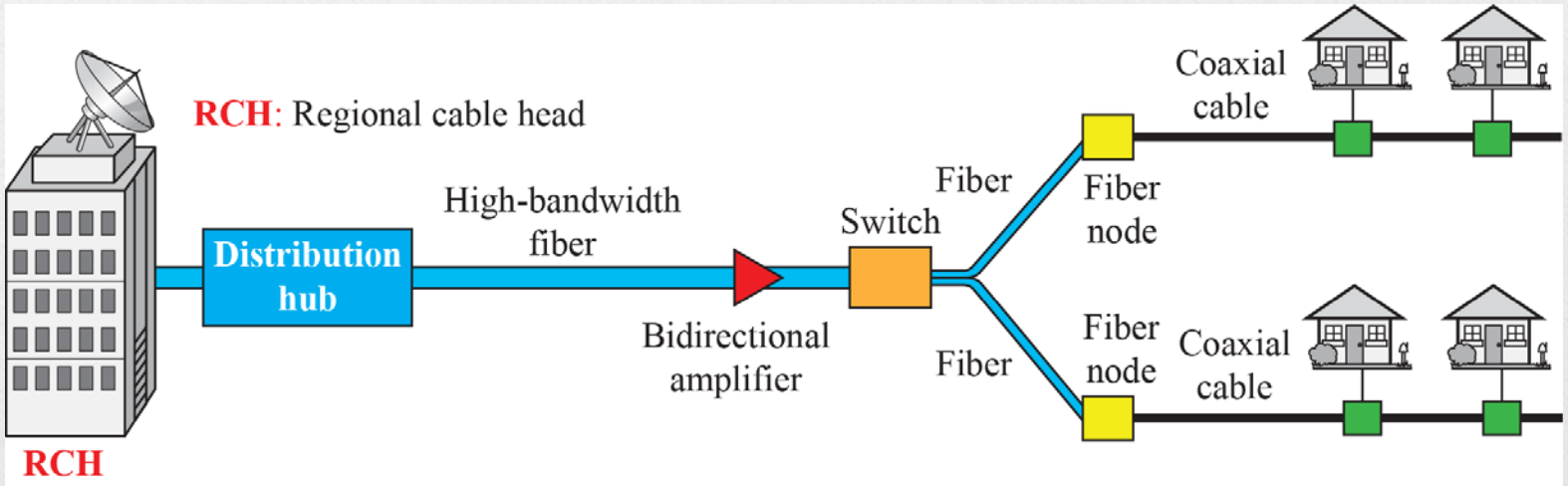

Next Class

- Wired Network
  - SONET
  - ATM

?

ayanm@iiti.ac.in

Room No. 407, POD-1A