CS 306: Wireless Networks (Part-II)

Dr. Ayan Mondal

Assistant Professor

Dept. of CSE, IIT Indore

https://www.iiti.ac.in/people/~ayanm/

Outline

- Cellular Telephony
- Satellite Networks

Cellular Telephony

- Cellular telephony is designed to provide communications between two moving units, called mobile stations (MSs), or between one mobile unit and one stationary unit, often called a land unit.
- A service provider must be able to locate and track a caller, assign a channel to the call, and transfer the channel from base station to base station as the caller moves out of range.

Cellular System

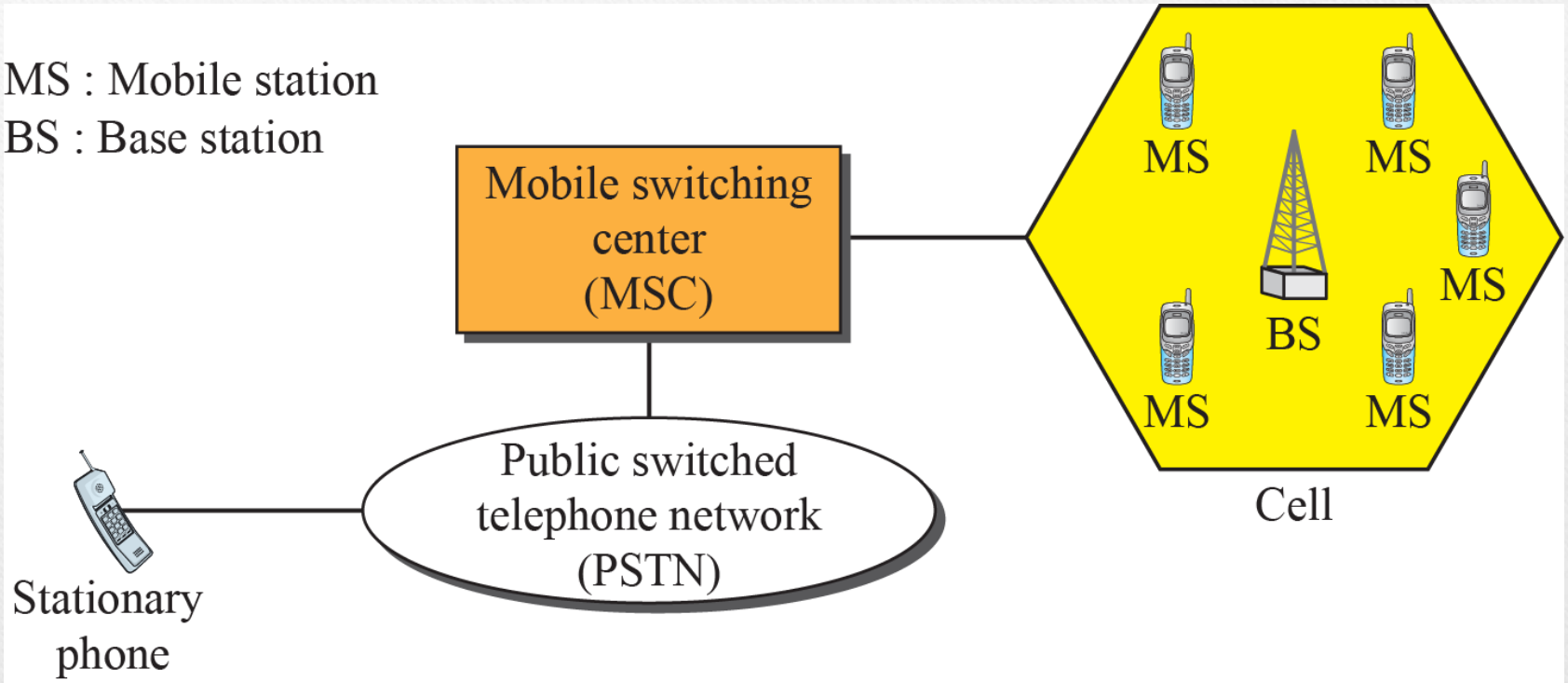

Operation

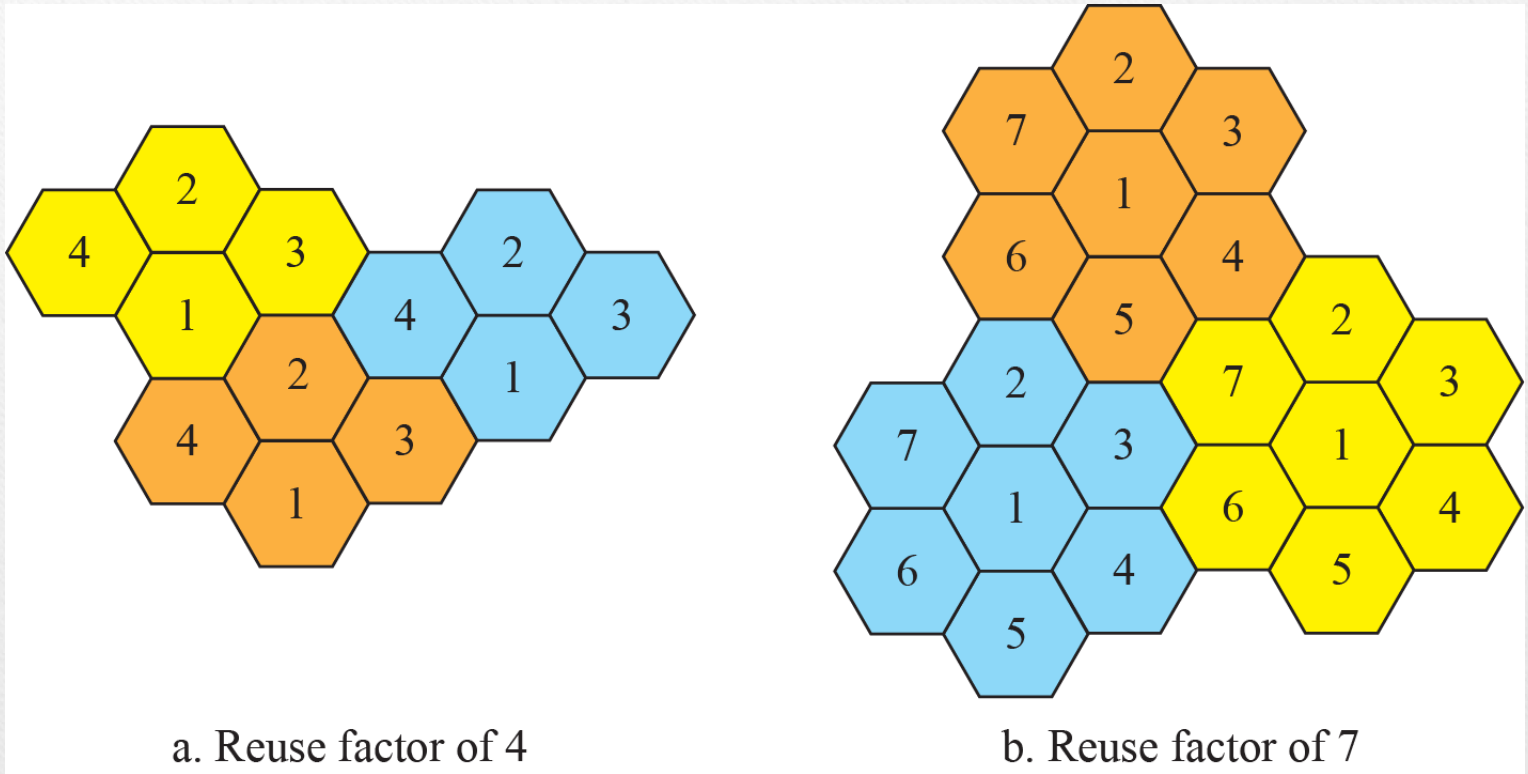

a. Reuse factor of 4

b. Reuse factor of 7

First Generation (1G)

- Cellular telephony is now in its fourth generation.
- The first generation was designed for voice communication using analog signals.
- One first-generation mobile system used in North America.

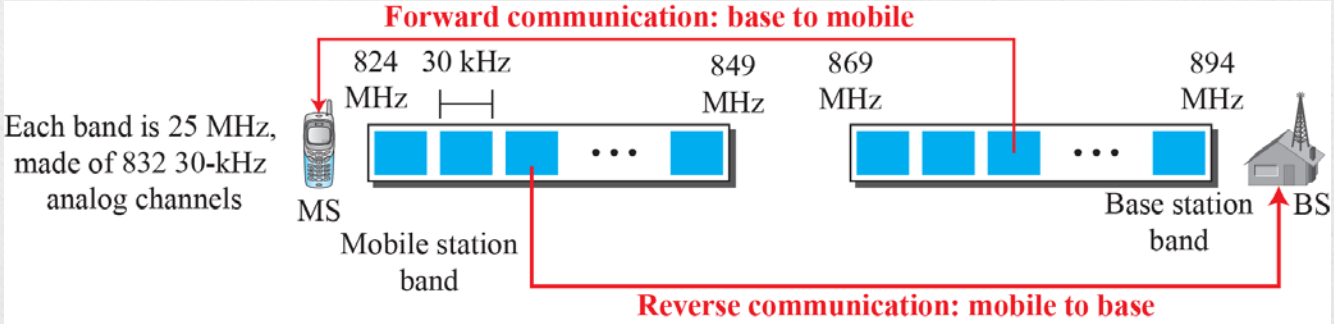

Reverse communication band

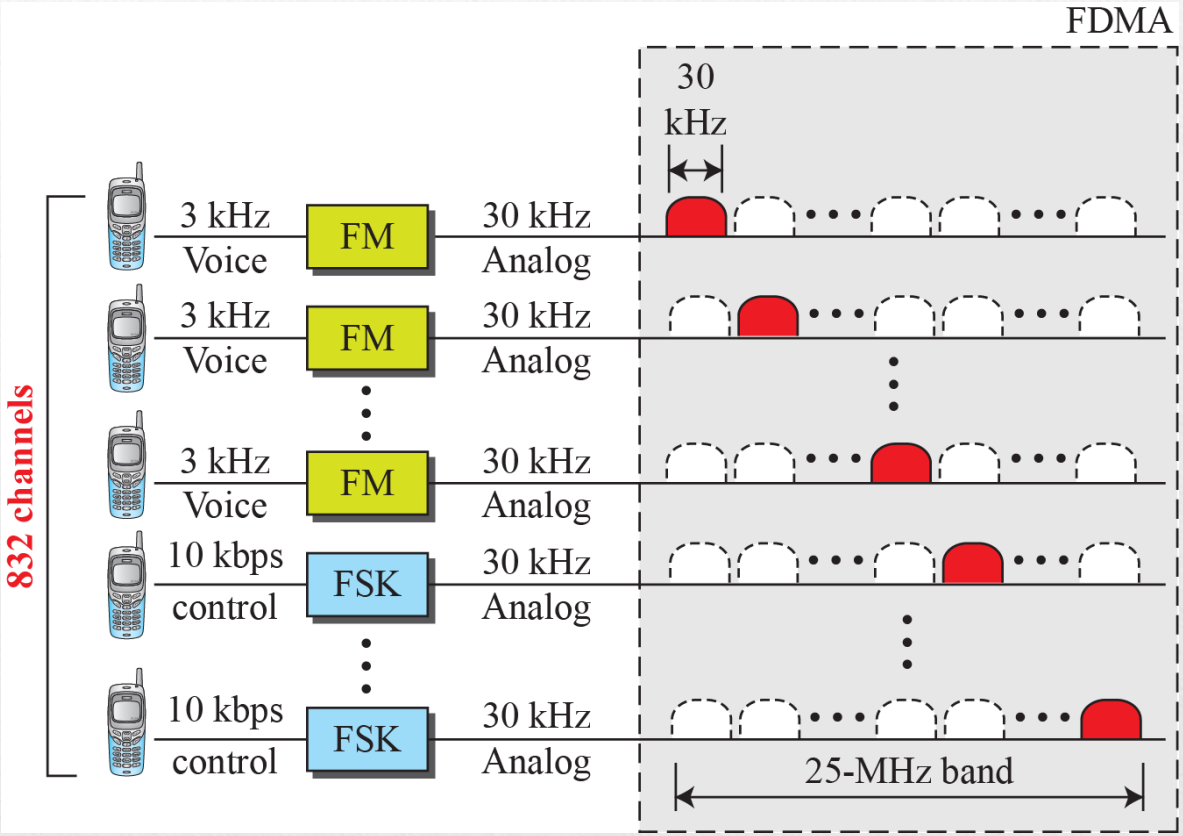

Second Generation (2G)

- To provide higher-quality (less noise-prone) mobile voice communications, the second generation of the cellular phone network was developed.
- While the first generation was designed for analog voice communication, the second generation was mainly designed for digitized voice.
- Three major systems evolved in the second generation: D-AMPS, GSM, and IS-95.

GSM bands

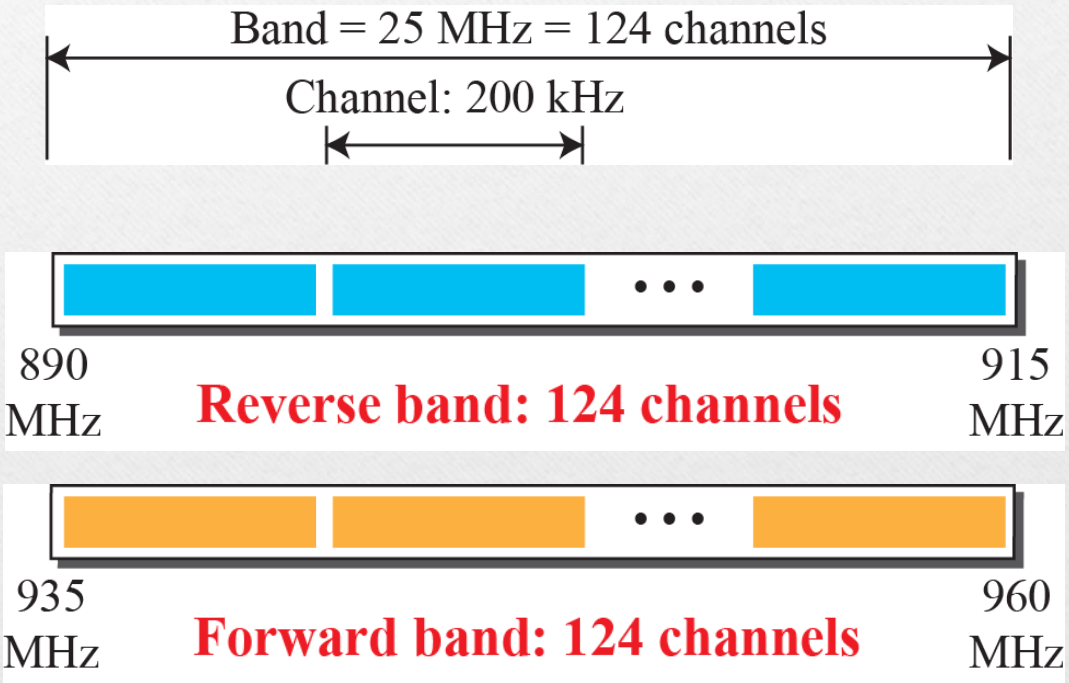
Band = 25 MHz = 124 channels
Channel: 200 kHz
890 MHz
Reverse band: 124 channels
915 MHz
935 MHz
Forward band: 124 channels
960 MHz

Third Generation (3G)

- The third generation of cellular telephony refers to a combination of technologies that provide both digital data and voice communication.

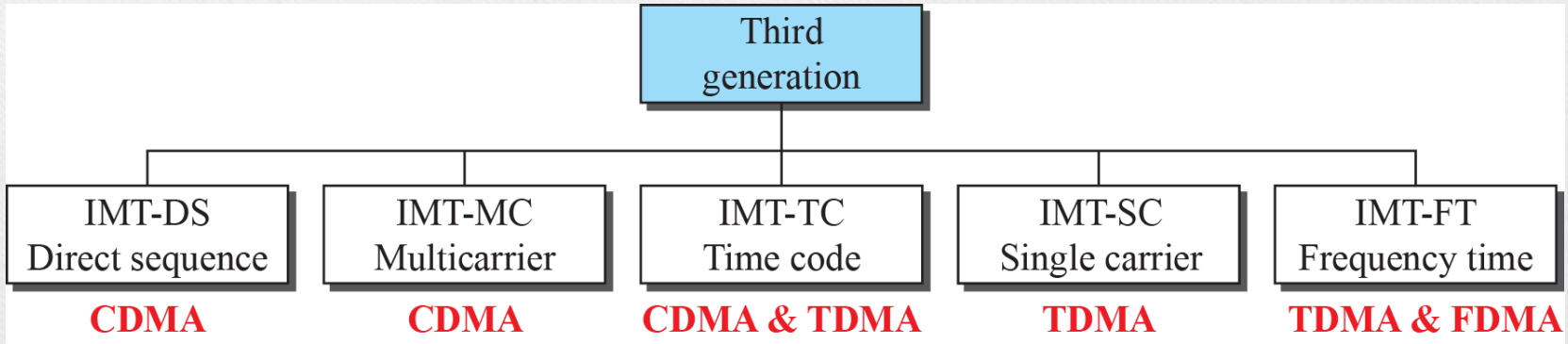

Fourth Generation (4G)

- The fourth generation of cellular telephony is expected to be a complete evolution in wireless communications.

Fifth Generation (5G)

- 5G enables a new kind of network that is designed to connect virtually everyone and everything together including machines, objects, and devices.
- 5G wireless technology is capable of high data speeds, ultra low latency, more reliability, massive network capacity, increased availability, and a more uniform user experience to more users.

source: https://www.qualcomm.com/5g

Sixth Generation (6G)

- 6G is a standard currently under development for wireless communications technologies supporting cellular data networks.
- It will serve as a distributed neural network that provides communication links to fuse the physical and cyber worlds.

source: https://www.huawei.com/en/technology-insights/future-technologies/6g-the-next-horizon

Satellite Network

- A satellite network is a combination of nodes, some of which are satellites, that provides communication from one point on the Earth to another.
- A node in the network can be a satellite, an Earth station, or an end-user terminal or telephone.

Operation

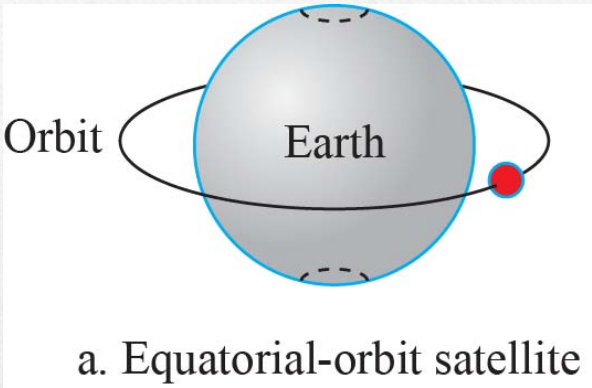

a. Equatorial-orbit satellite

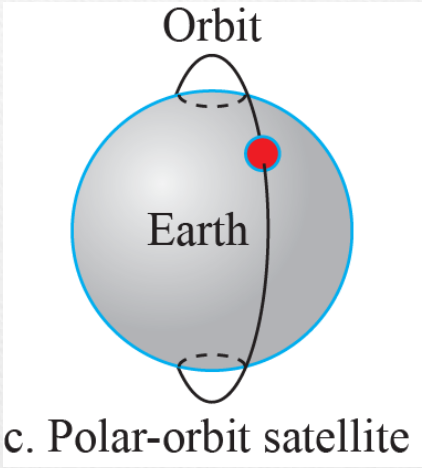

c. Polar-orbit satellite

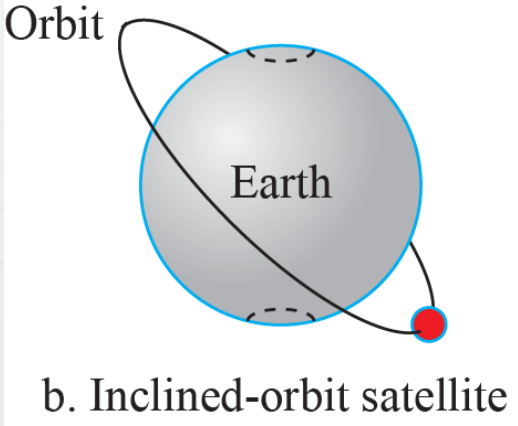

b. Inclined-orbit satellite

Satellite orbit altitudes

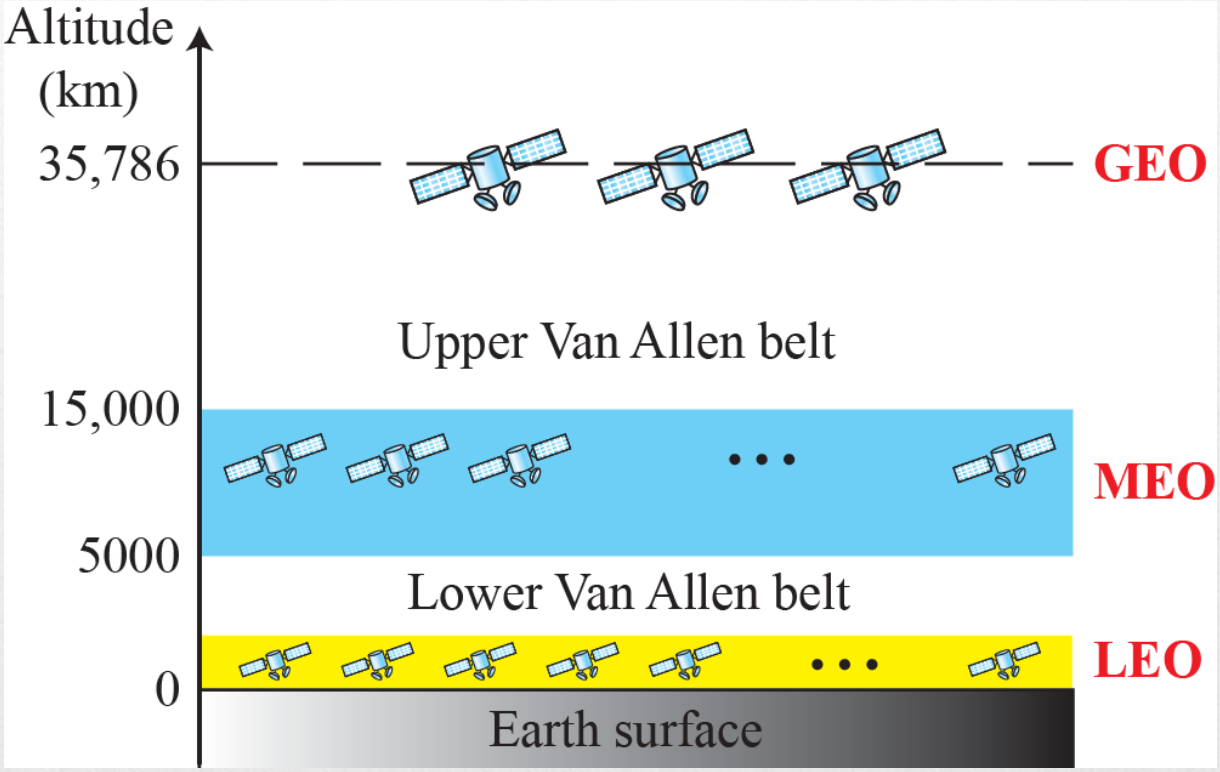

GEO Satellites

- To ensure constant communication, the satellite must move at the same speed as the Earth so that it seems to remain fixed above a certain spot.
- Such satellites are called GEO Satellites or geostationary.

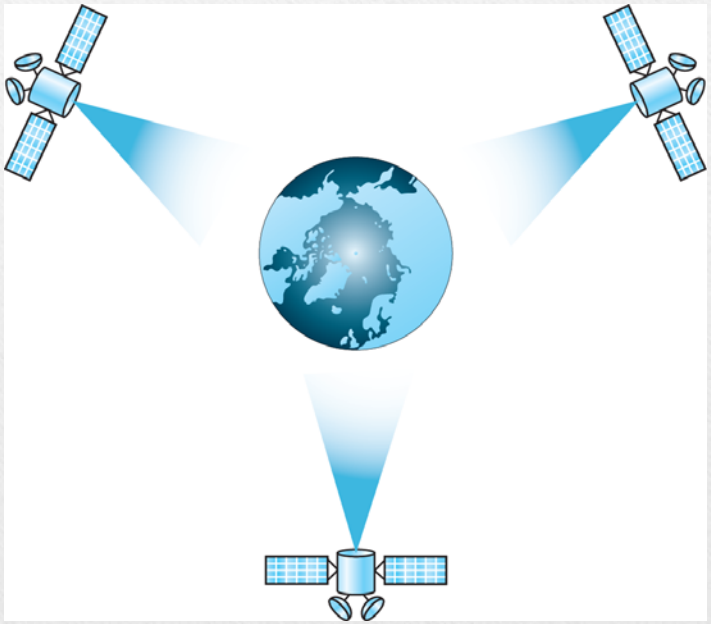

MEO Satellites

- Medium-Earth-orbit (MEO) satellites are positioned between the two Van Allen belts.
- A satellite at this orbit takes approximately 6 to 8 hours to circle the Earth
- Application - GPS

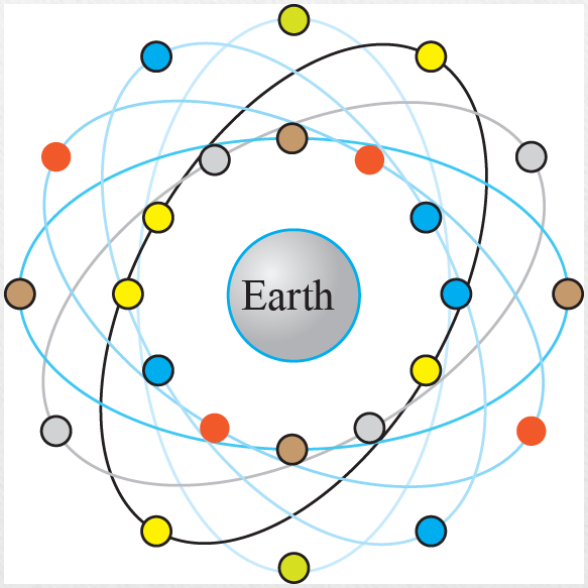

LEO Satellites

- A low Earth orbit (LEO) is near the planet and have a period of 128 minutes or less
- Example: International Space Station

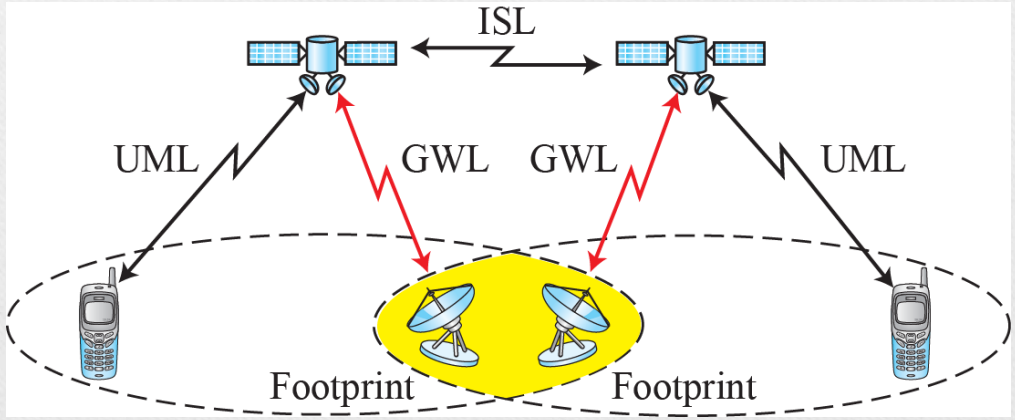

Next Class

- Connecting Devices and Virtual LANs

?

ayanm@iiti.ac.in

Room No. 407, POD-1A