CS 306: Connecting Devices and Virtual LANs

Dr. Ayan Mondal

Assistant Professor

Dept. of CSE, IIT Indore

https://www.iiti.ac.in/people/~ayanm/

Outline

- Connecting Devices
- Virtual LANs

Connecting Devices

- Hosts and networks do not normally operate in isolation.
- We use connecting devices to connect hosts together to make a network or to connect networks together to make an internet.
- Connecting devices are of three kinds of connecting devices: hubs, link-layer switches, and routers.

Three categories of connecting devices

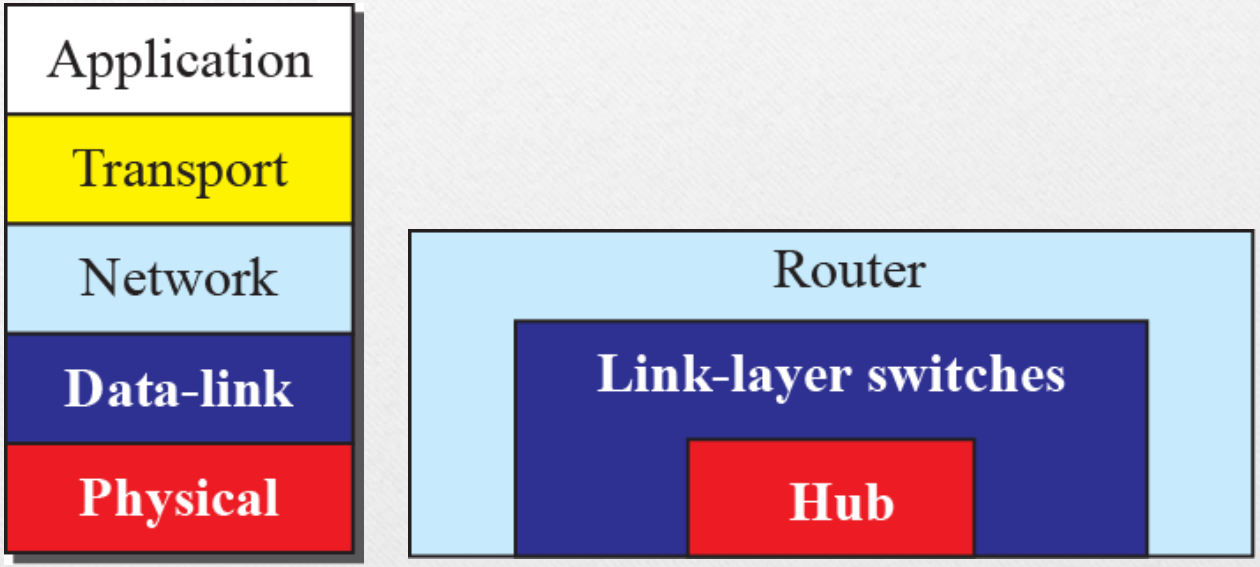

Hubs

- A hub is a device that operates only in the physical layer.
- Signals that carry information within a network can travel a fixed distance before attenuation endangers the integrity of the data.
- A repeater receives a signal and, before it becomes too weak or corrupted, regenerates and retimes the original bit pattern.

Link-Layer Switches

- A link-layer switch (or switch) operates in both the physical and the data-link layers.
- As a physical-layer device, it regenerates the signal it receives. As a link-layer device, the link-layer switch can check the MAC addresses (source and destination) contained in the frame.

Routers

- A router is a three-layer device; it operates in the physical, data-link, and network layers.

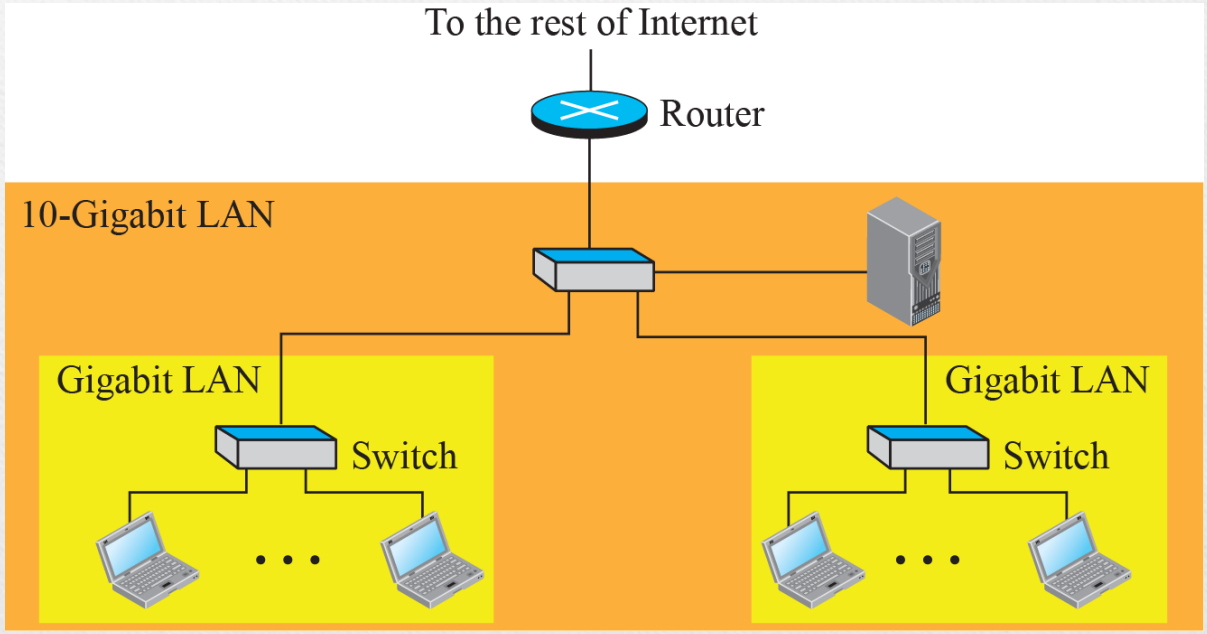

Virtual LANs

- A station is considered part of a LAN if it physically belongs to that LAN. The criterion of membership is geographic.
- We can roughly define a virtual local area network (VLAN) as a local area network configured by software, not by physical wiring.

A switch using VLAN software

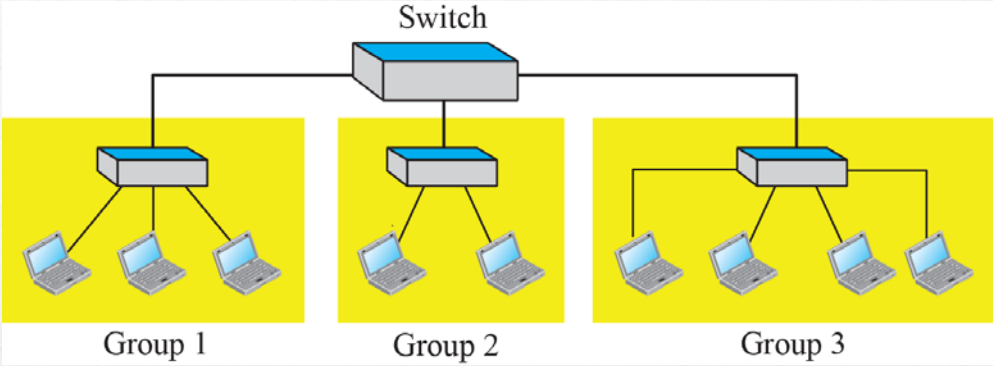

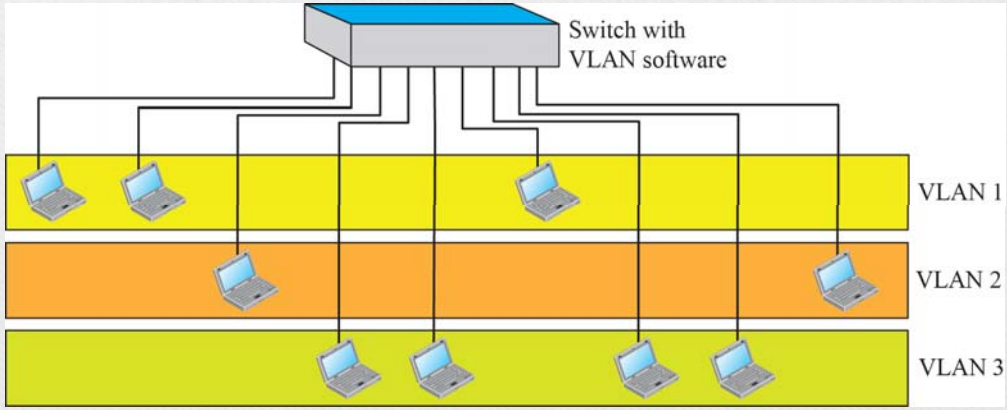

Membership & Configuration

- Vendors use different characteristics such as interface numbers, port numbers, MAC addresses, IP addresses, IP multicast addresses, or a combination of two or more of these.
- Stations are configured in one of three ways: manually, semi-automatically, and automatically.

?

ayanm@iiti.ac.in

Room No. 407, POD-1A