CS 306: Analog Transmission

Dr. Ayan Mondal

Assistant Professor

Dept. of CSE, IIT Indore

https://www.iiti.ac.in/people/~ayanm/

Outline

- Digital-to-Analog Conversion
- Analog-to-Analog Conversion

Digital-to-Analog Conversion

- Digital-to-analog conversion is the process of changing one of the characteristics of an analog signal based on the information in digital data.

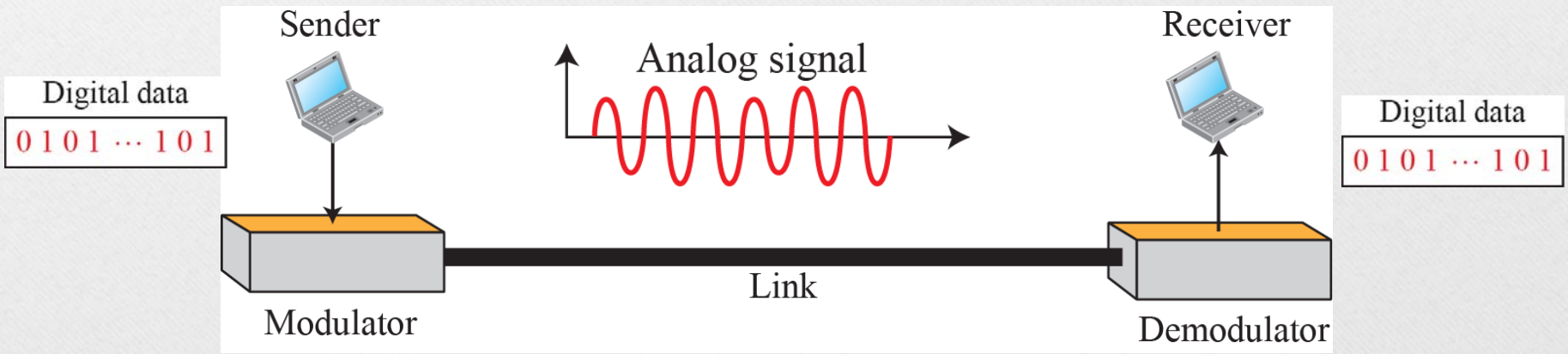

Types Digital-to-Analog Conversion

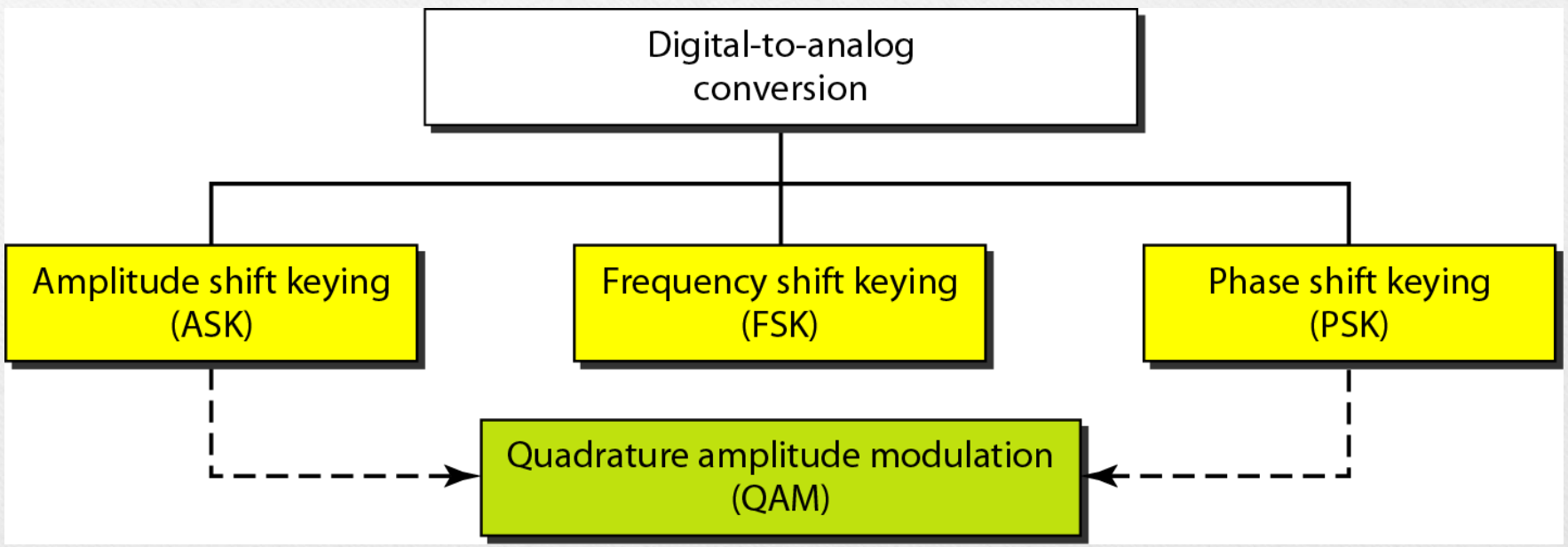

Amplitude Shift Keying

- Amplitude of the carrier signal is varied to create signal elements.
- Both frequency and phase remain constant while the amplitude changes.

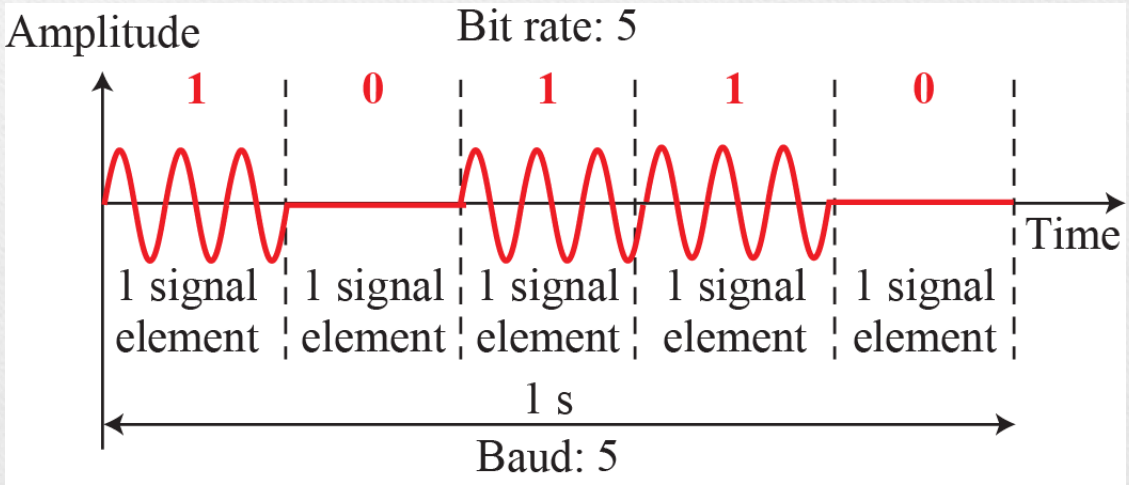

Implementation of binary ASK

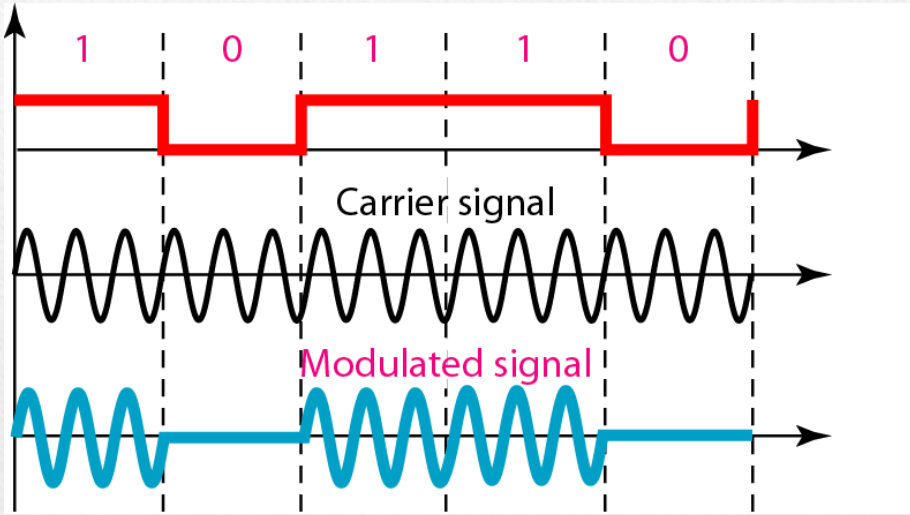

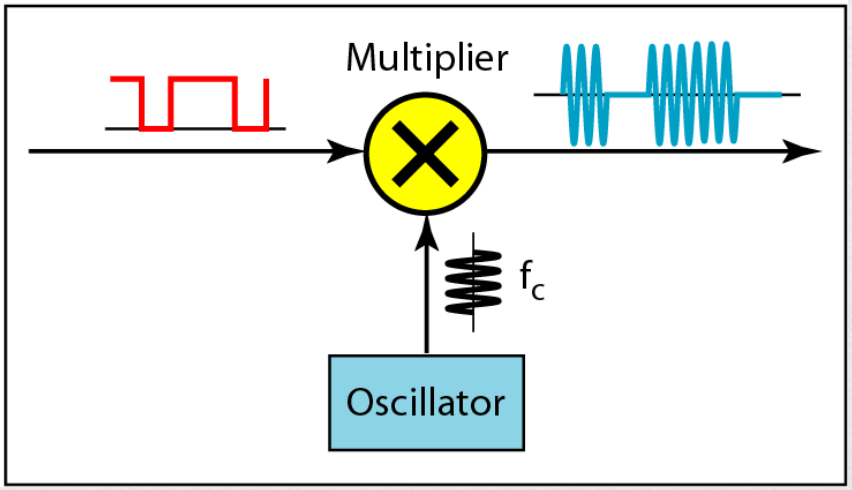

Frequency Shift Keying

- Frequency of the carrier signal is varied to represent data.
- The frequency of the modulated signal is constant for the duration of one signal element, but changes for the next signal element if the data element changes.
- Both peak amplitude and phase remain constant for all signal elements.

Binary Frequency Shift Keying

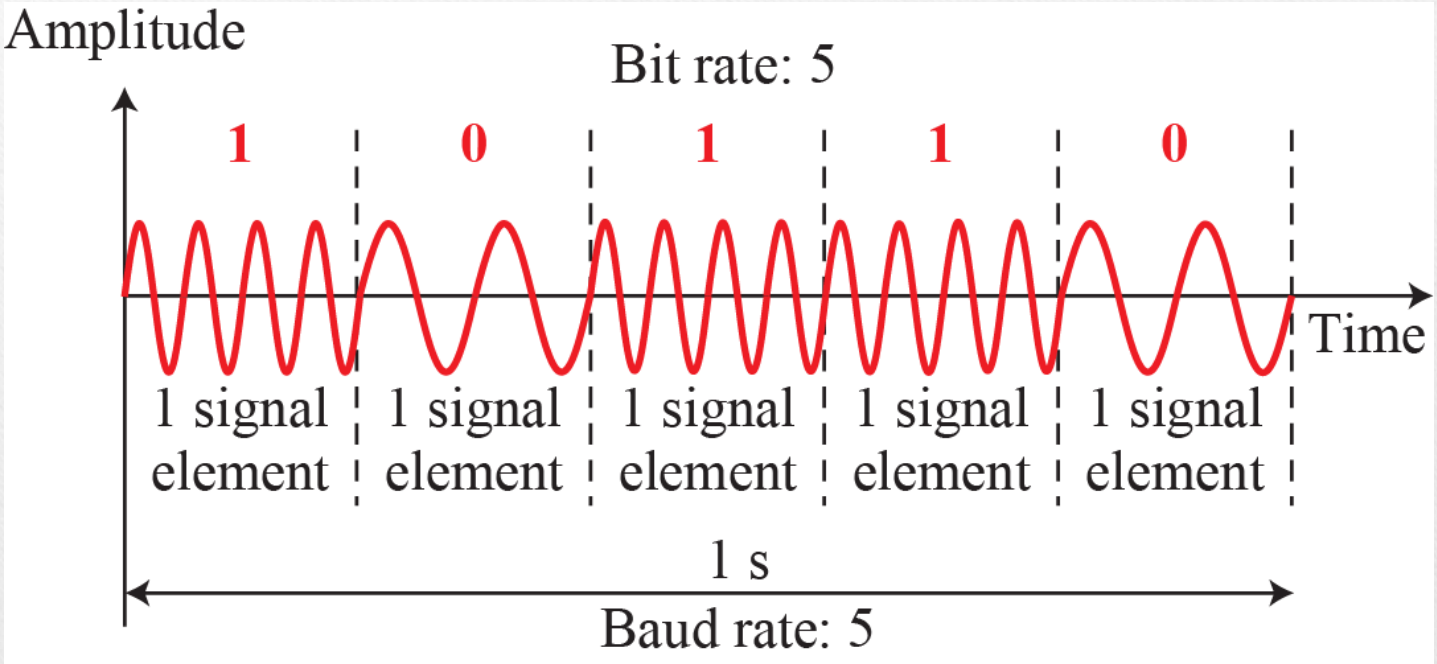

Implementation of FSK

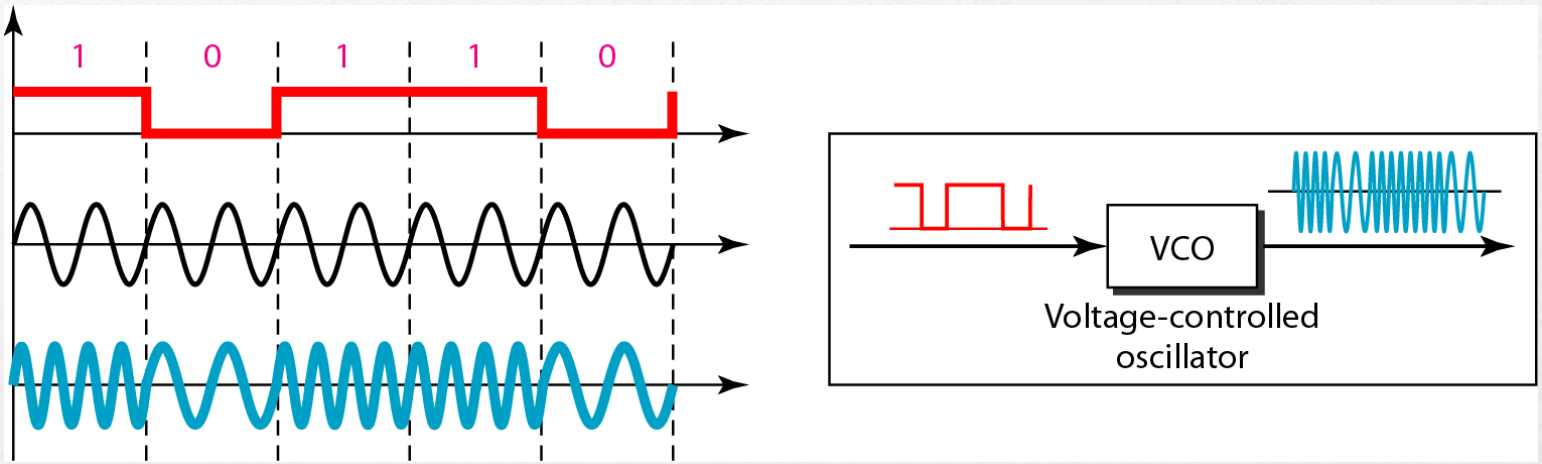

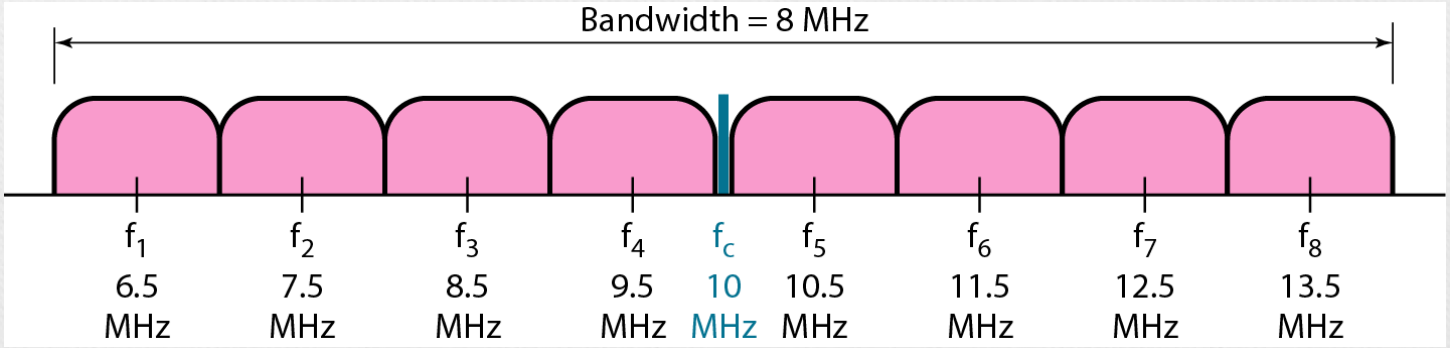

Phase Shift Keying

- Phase of the carrier is varied to represent two or more different signal elements.
- Both peak amplitude and frequency remain constant as the phase changes.
- Today, PSK is more common than ASK or FSK.

Binary phase shift keying

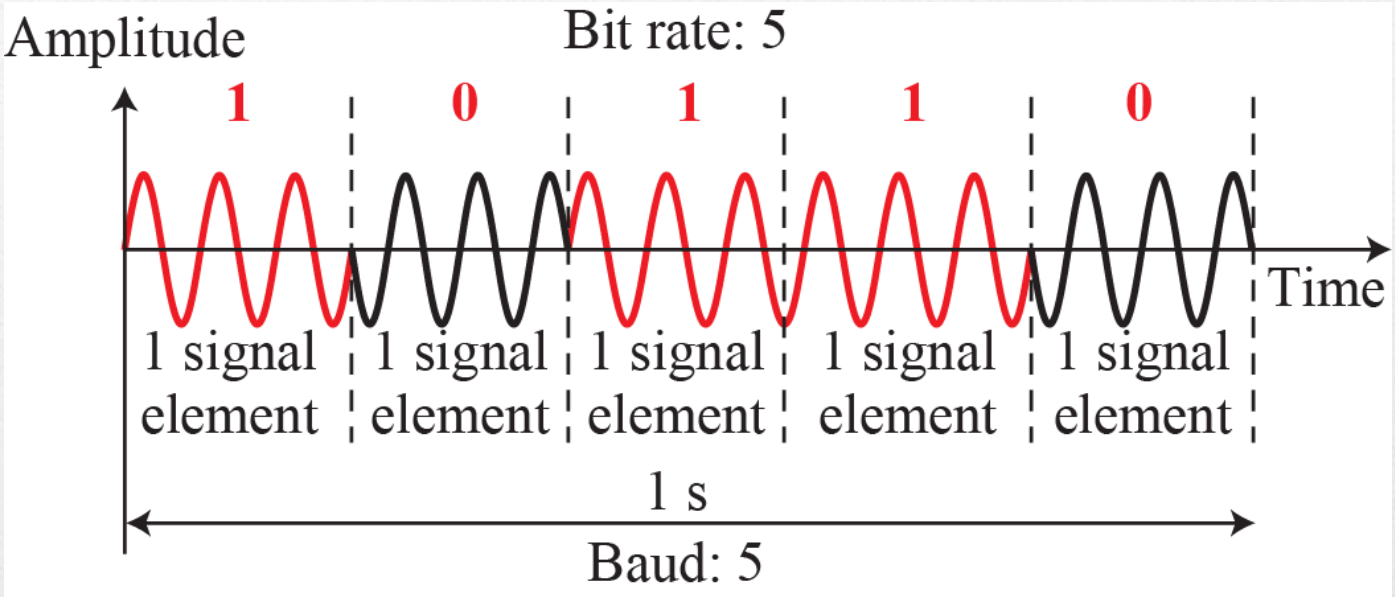

Implementation of BPSK

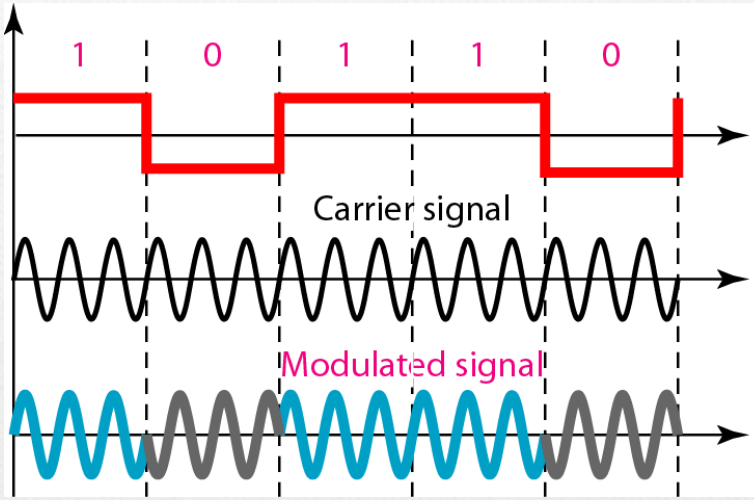

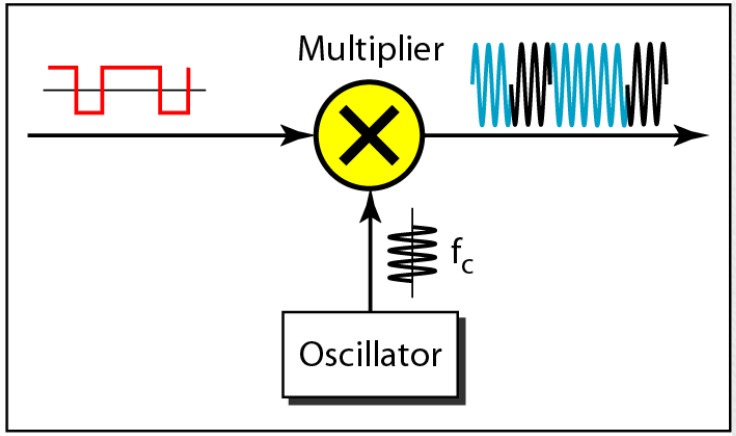

Implementation of QPSK

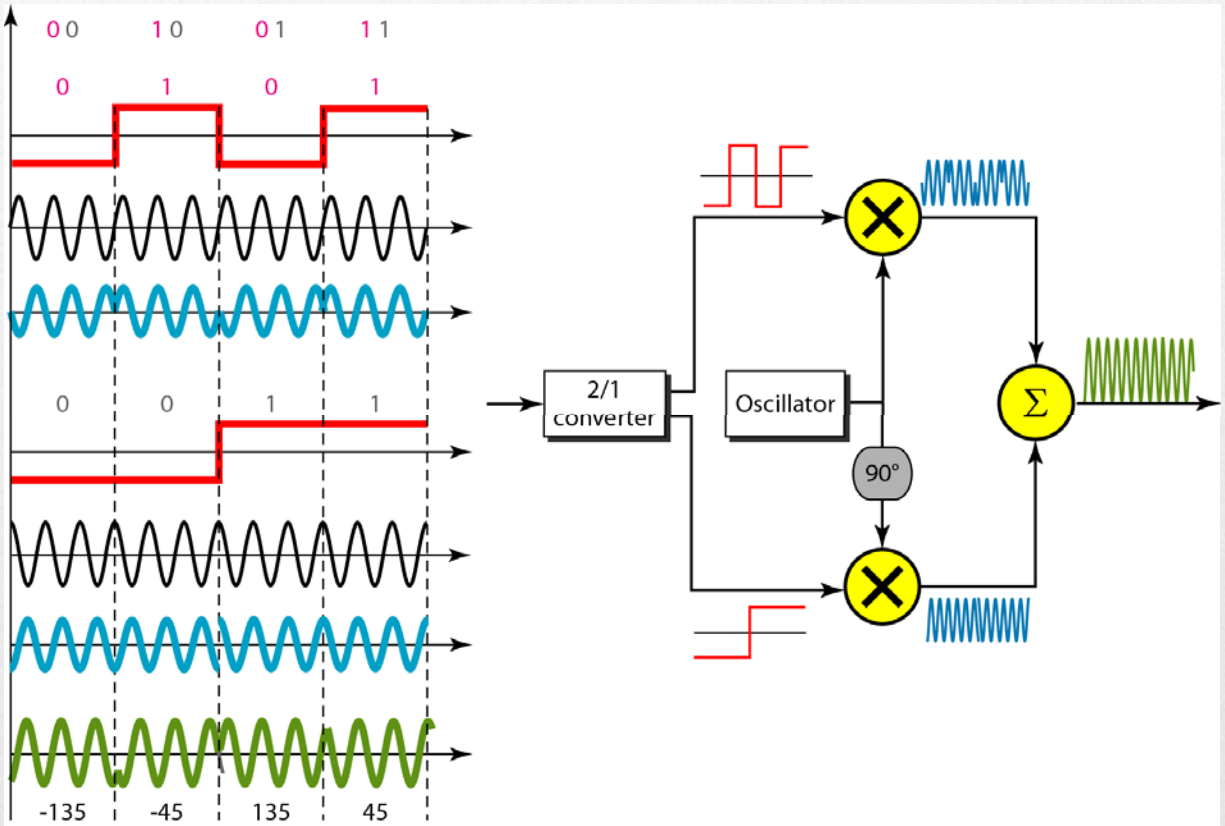

Concept of a constellation diagram

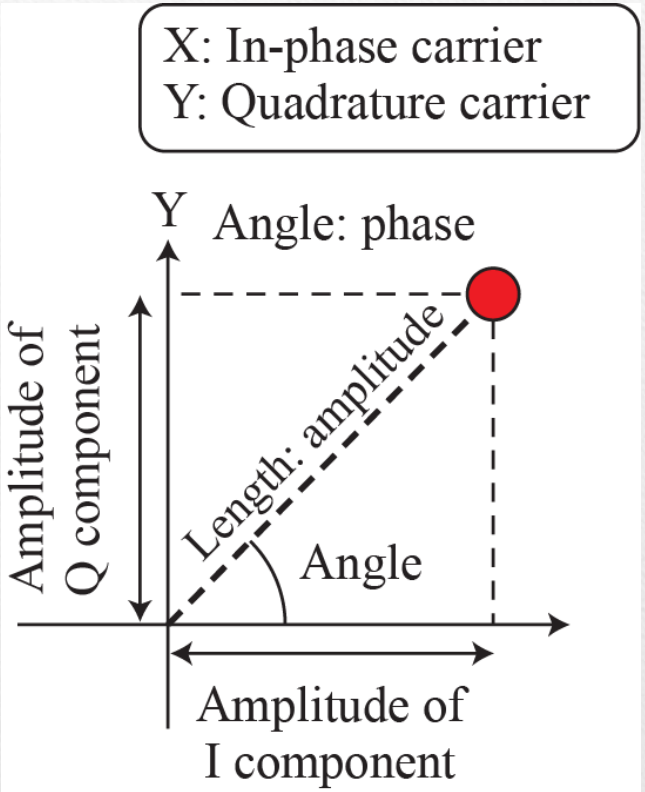

Three constellation diagrams

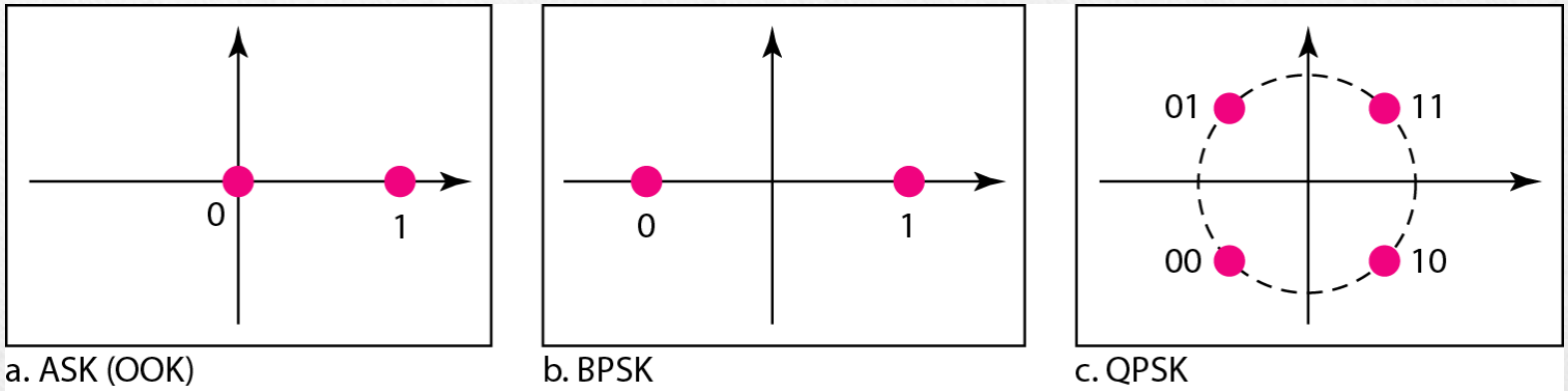

a. ASK (OOK) b. BPSK c. QPSK

Quadrature Amplitude Modulation

- PSK is limited by the ability of the equipment to distinguish small differences in phase. This factor limits its potential bit rate.
- The concept behind quadrature amplitude modulation (QAM) is using two carriers, where one in-phase and the other quadrature, with different amplitude levels for each carrier.

Constellation Diagrams for Some QAMs

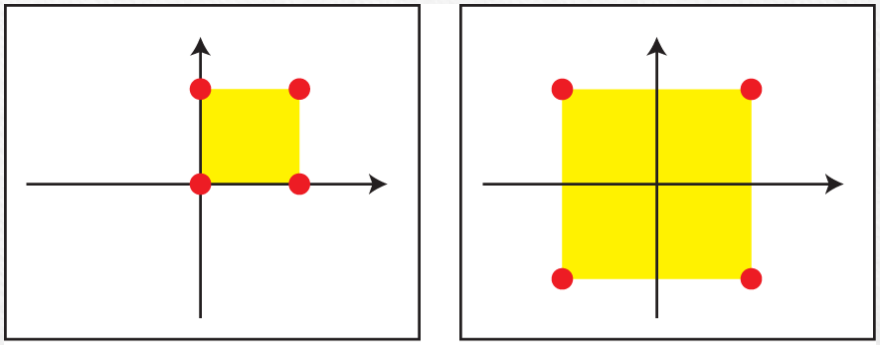

a. 4-QAM

b. 4-QAM

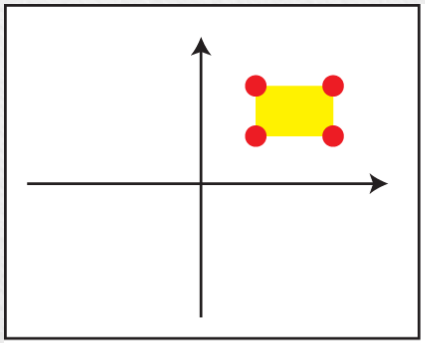

c. 4-QAM

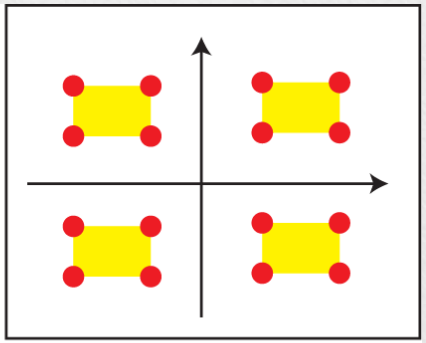

d. 16-QAM

Analog-to-Analog Conversion

- Analog-to-analog conversion, or analog modulation, is the representation of analog information by an analog signal.
- Modulation is needed if the medium is bandpass in nature or if only a bandpass channel is available to us.

Types of analog-to-analog modulation

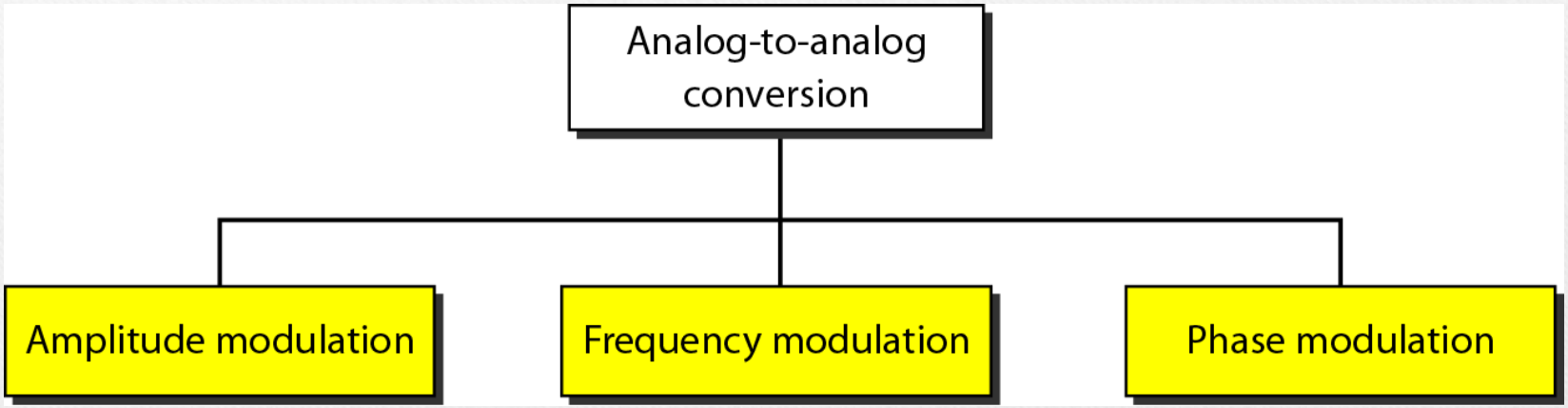

Amplitude Modulation

- In AM transmission, the carrier signal is modulated so that its amplitude varies with the changing amplitudes of the modulating signal.
- The frequency and phase of the carrier remain the same; only the amplitude changes to follow variations in the information.

Amplitude Modulation (Contd.)

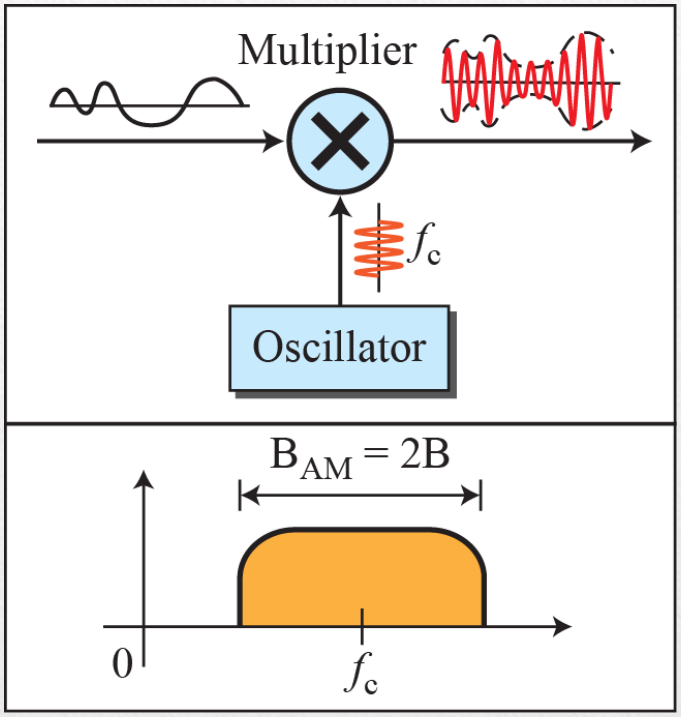

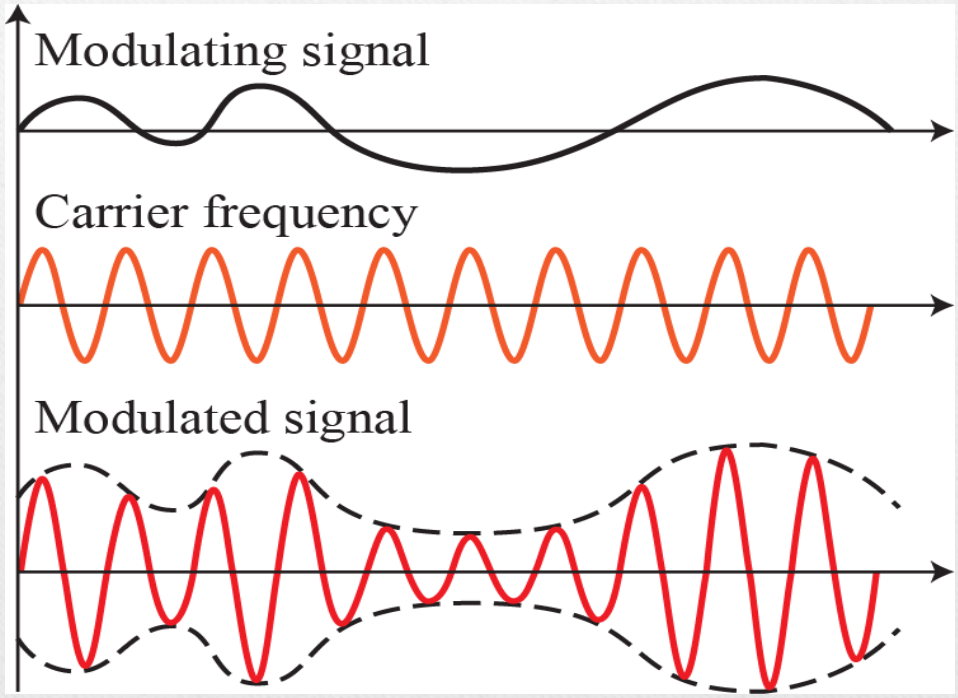

AM Band Allocation

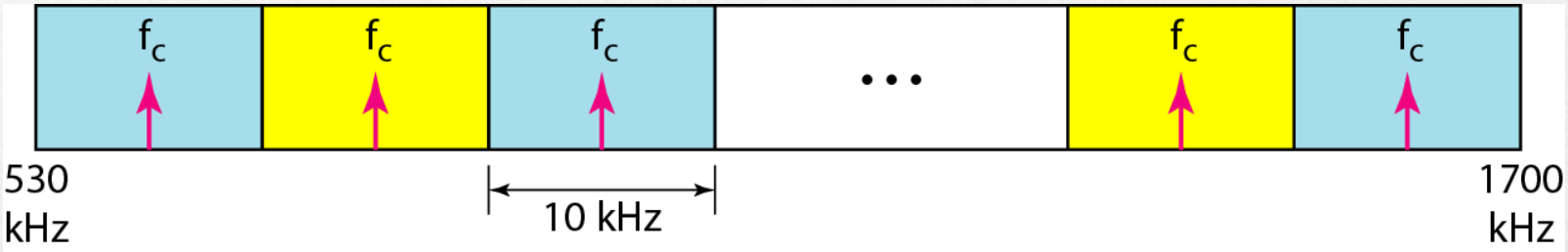

Frequency Modulation

- In FM transmission, the frequency of the carrier signal is modulated to follow the changing voltage level (amplitude) of the modulating signal.
- The peak amplitude and phase of the carrier signal remain constant, but as the amplitude of the information signal changes, the frequency of the carrier changes correspondingly.

Frequency Modulation (Contd.)

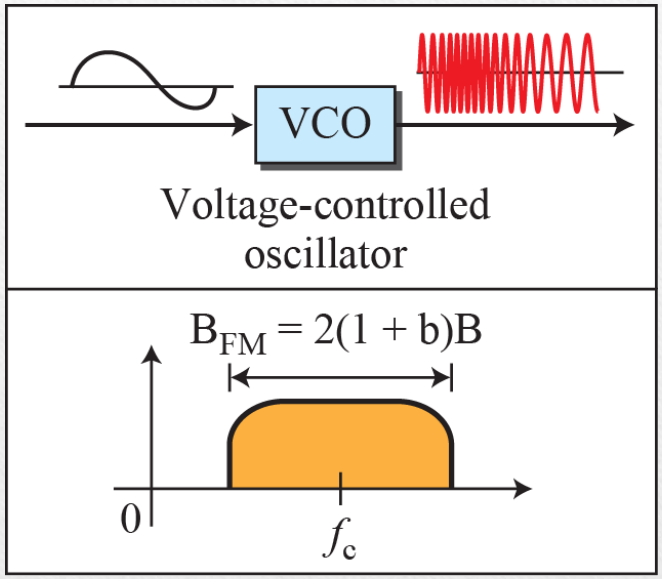

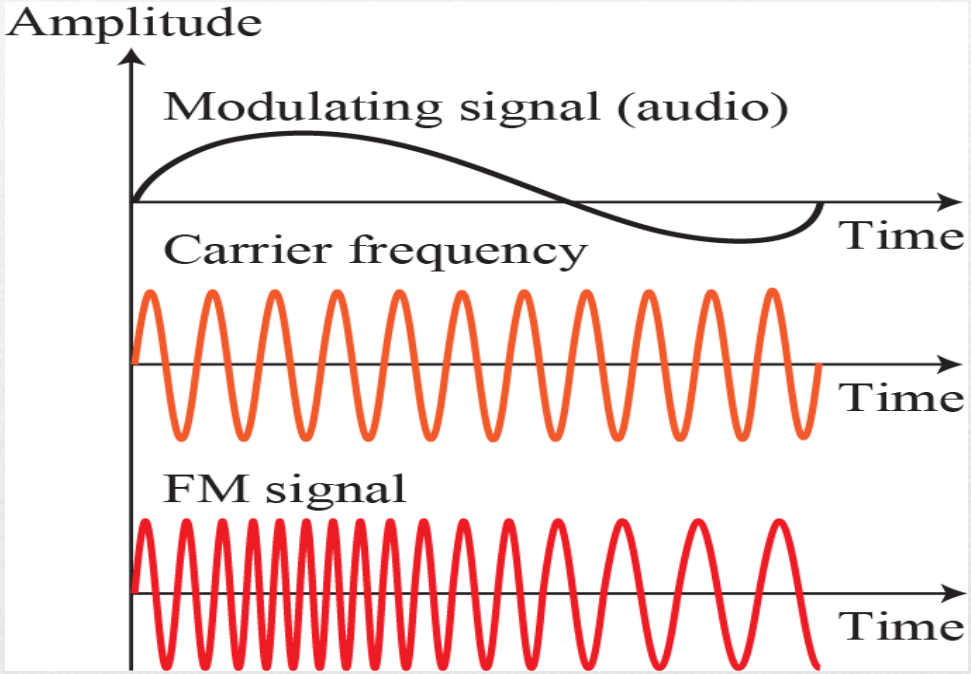

Phase Modulation

- In PM transmission, the phase of the carrier signal is modulated to follow the changing voltage level (amplitude) of the modulating signal.
- The peak amplitude and frequency of the carrier signal remain constant, but as the amplitude of the information signal changes, the phase of the carrier changes correspondingly.

Phase Modulation (Contd.)

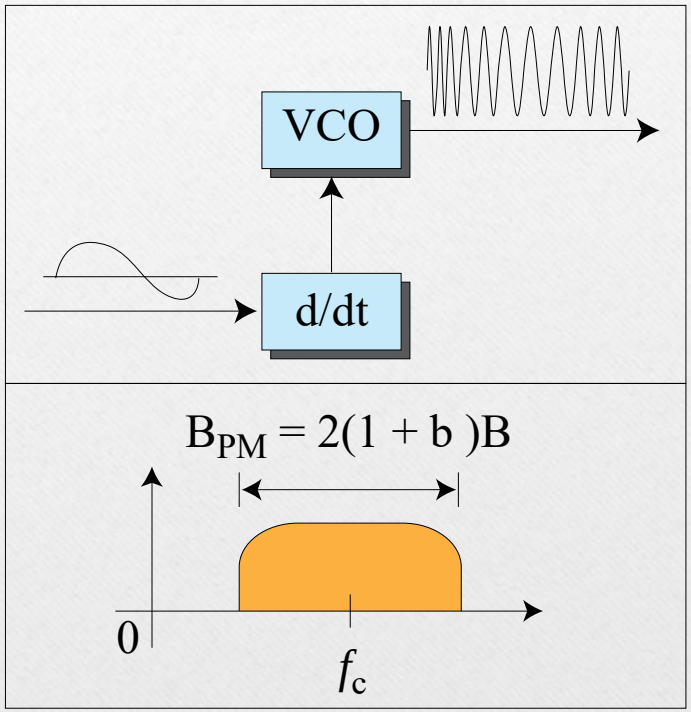

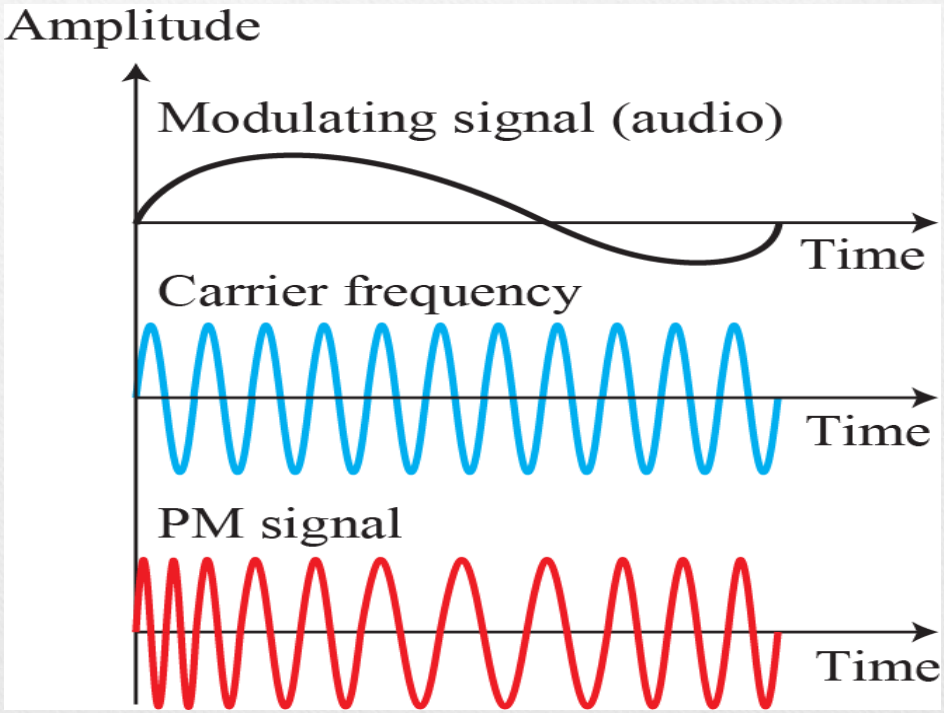

Next Class

- Bandwidth Utilization and Transmission Media

?

ayanm@iiti.ac.in

Room No. 407, POD-1A