BOARD DIMENSIONS

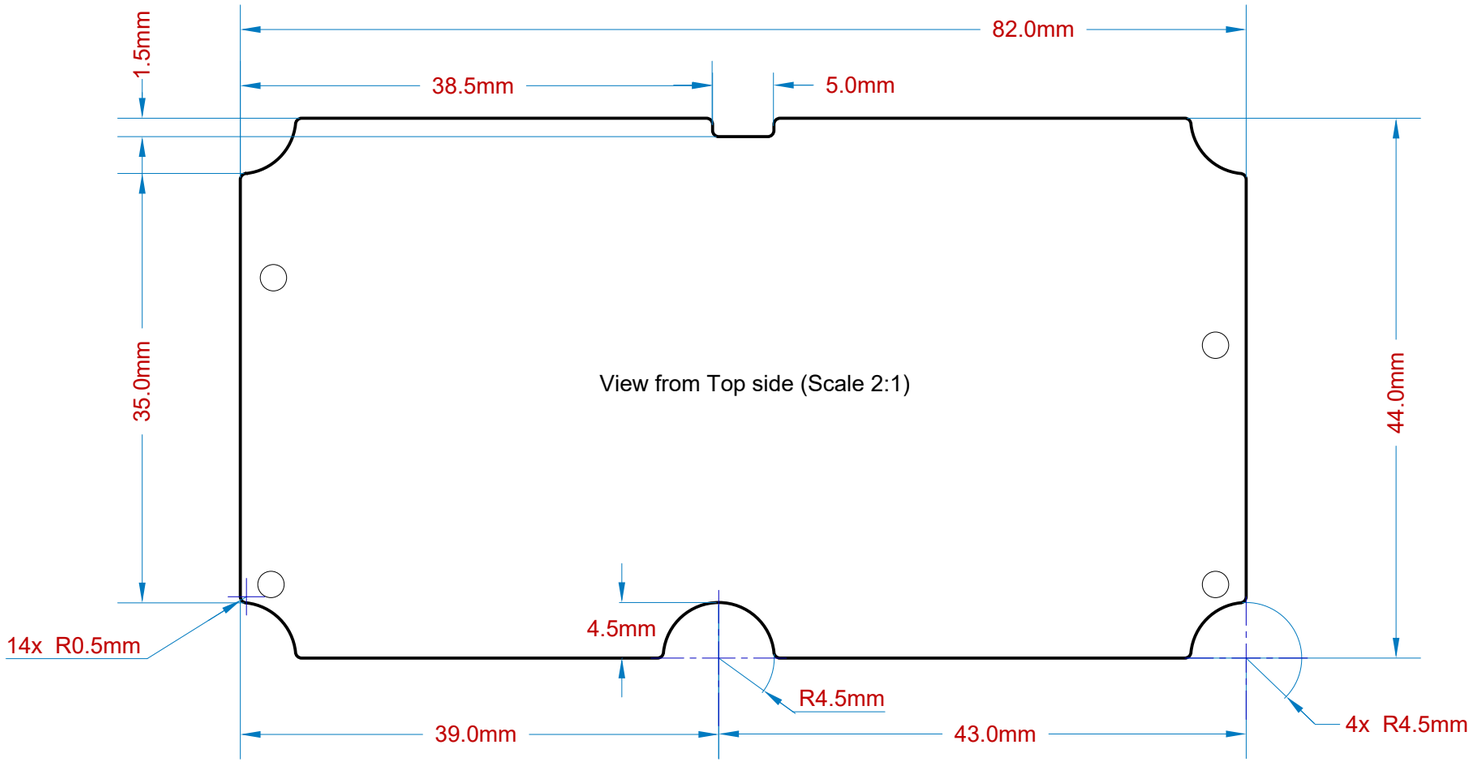

MOUNTING HOLES

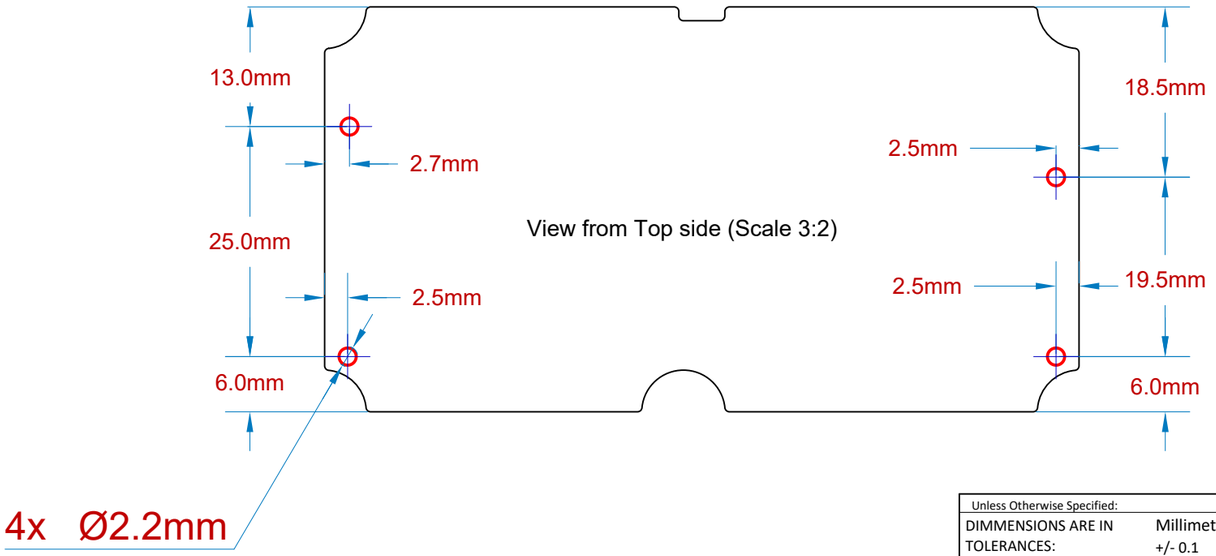

Unless Otherwise Specified:		APPROVALS	DATES
DIMMENSIONS ARE IN	Millimeters	ENGINEER: Francisco Gomez	30/06/2022
TOLERANCES:	+/- 0.1	CHECKER:	New
FRACTIONAL: +/-		MFG. APPR.	
ANGULAR MACH: +/-	BEND: +/-	Q. A.	
TWO PLACE DECIMAL: +/-		Reference Documents	
THREEE PLACE DECIMAL: +/-		BOM DOC:	
COMMENTS:		ASSY DOC:	
		SCH DOC:	
		PCB DOC:	

Dott (emTransit B.V.)
Westerdok
Van Diemenstraat 292
1013 CR, Amsterdam
The Netherlands

TITLE
PROJECT: **SDRR**
BOARD NAME: **LIDO** VARIANT: **Development**
SIZE: **A3** BOARD VERSION: 0 REVISION: .3
SCALE: 4:1 DWG. NO. SHEET: 1 of 1