28Pins

Variant: [No Variations]

4/28/2015
V1I1

RELEASED 07-APR-2015

Page	Index	Page	Index	Page	Index	Page	Index
1	COVER PAGE	11	.....	21	.....	31	.....
2	BLOCK DIAGRAM	12	.....	22	.....	32	.....
3	28PINS SCHEMATIC	13	.....	23	.....	33	.....
4	REVISION HISTORY	14	.....	24	.....	34	.....
5	.....	15	.....	25	.....	35	.....
6	.....	16	.....	26	.....	36	.....
7	.....	17	.....	27	.....	37	.....
8	.....	18	.....	28	.....	38	.....
9	.....	19	.....	29	.....	39	.....
10	.....	20	.....	30	.....	40	.....

DESIGN NOTE:
Example text for debug notes.

DESIGN CONSIDERATIONS

DESIGN NOTE:
Example text for informational design notes.

DESIGN NOTE:
Example text for critical design notes.

DESIGN NOTE:
Example text for cautionary design notes.

LAYOUT NOTE:
Example text for critical layout guidelines.

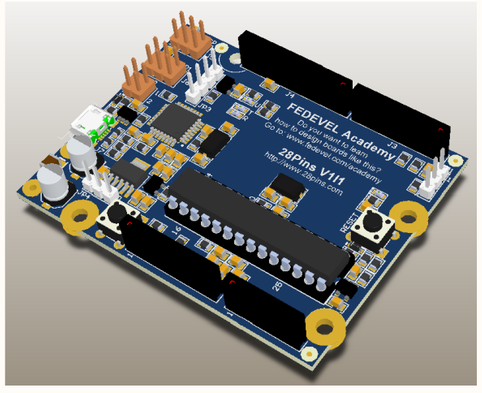

FEDEVEL Academy

Learn Schematic and PCB Design - ONLINE

(c) 2015 FEDEVEL Academy http://www.fedevel.com/academy

Title:	28Pins	Variant: [No Variations]	
Page Contents:	[01] - COVER PAGE.SchDoc	Checked by	
Size:	DWG NO		Revision: V1I1
Date: 4/28/2015	Designed by www.fedevel.com	Sheet 1 of 5	

28Pins
(Block Diagram)

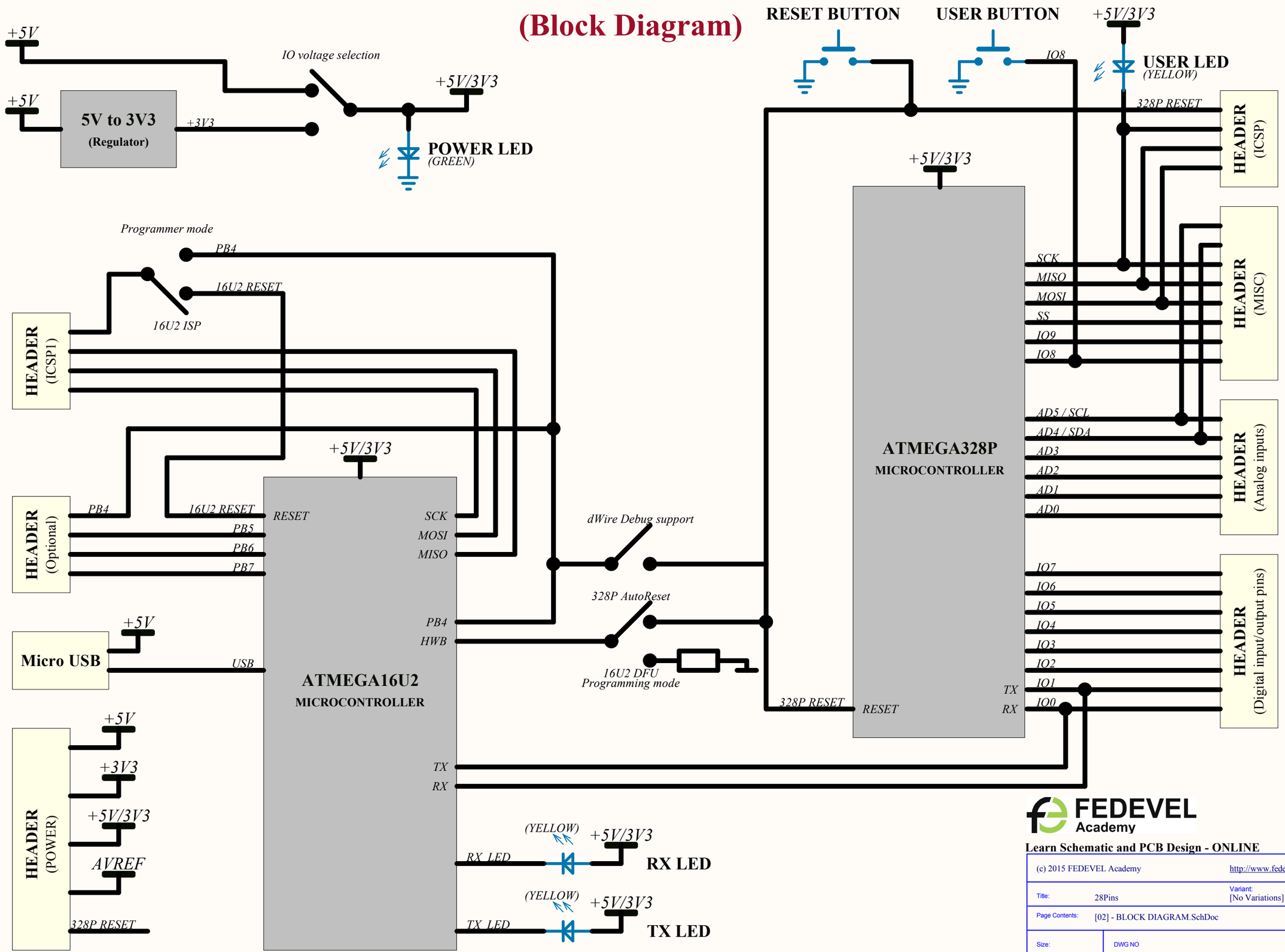

FEDEVEL Academy

Learn Schematic and PCB Design - ONLINE

(c) 2015 FEDEVEL Academy		http://www.fedevel.com/academy
Title: 28Pins		Variant: [No Variations]
Page Contents: [02] - BLOCK DIAGRAM.SchDoc		
Size:	DWG NO	Revision: V111
Date: 4/28/2015	Designed by www.fedevel.com	Sheet 2 of 5 Checked by

28PINS - SCHEMATIC

http://www.28pins.com

DESIGN NOTE:
This board supports 5V or 3V3 voltage level on the IO pins:
1) 5V IO - Fit everything as defined in this schematic. NF means, do not fit this component.

2) 3.3V IO - Remove R27, Fit R28, *Replace Y1 (change from 16MHz to 10MHz), *Replace Y2 (change from 16MHz to 8MHz).

3) Both 5V and 3V3, selected through JP4 - Remove R27, Remove R28, Fit JP4, *Replace Y1 (change from 16MHz to 10MHz), *Replace Y2 (change from 16MHz to 8MHz).

*Note: The 16MHz crystals are not recommended for 3.3V operation. We need to adjust their values, thats why the change.

IMPORTANT: Once you change the crystal value, you may need to re-compile your source code.

DESIGN NOTE:

About JP3:
1) DebugWire support - Short 1&2. This was added to support possible debugWire debugging (programming?) of 328P through 16U2. In this case, the 16U2 needs to have a correct firmware and has to behave as a debugWire tool.

2) ISP programmer mode - Short 2&3. In this case, take a cable and connect J5 & J6 together. Upload AVRISP MKII firmware into 16U2 and you can program 328P. Example of AVRISP MKII firmware can be found at LUFA projects: http://www.fourwalledcubicle.com/LUFA.php (Tip: remap LEDs of the default AVRISP MKII LUFA project to the RX and TX LEDs on the 28Pin board)

3) ISP header - Short 3 & 4. In this mode, the ICSP1 header is used as a standard ISP header to program 16U2 through ISP interaface by an ISP programmer.

DESIGN NOTE:

About JP1:
1) Autoreset Enabled - Short 1&2. In this case, 16U2 is used to reset 328P when firmware inside 328P is updated from Arduino IDE.

2) 16U2 DFU mode Enabled - Short 2&3. 16U2 HWB pin is sampled by 16U2 during RESET. If pulled low, then after Reset the 16U2 will go into DFU mode (it's the mode when you can flash 16U2 firmware through USB and Atmel Flip software: http://www.atmel.com/tools/flip.aspx).

Micro USB

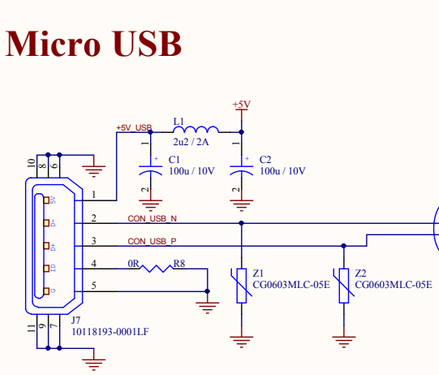

16U2

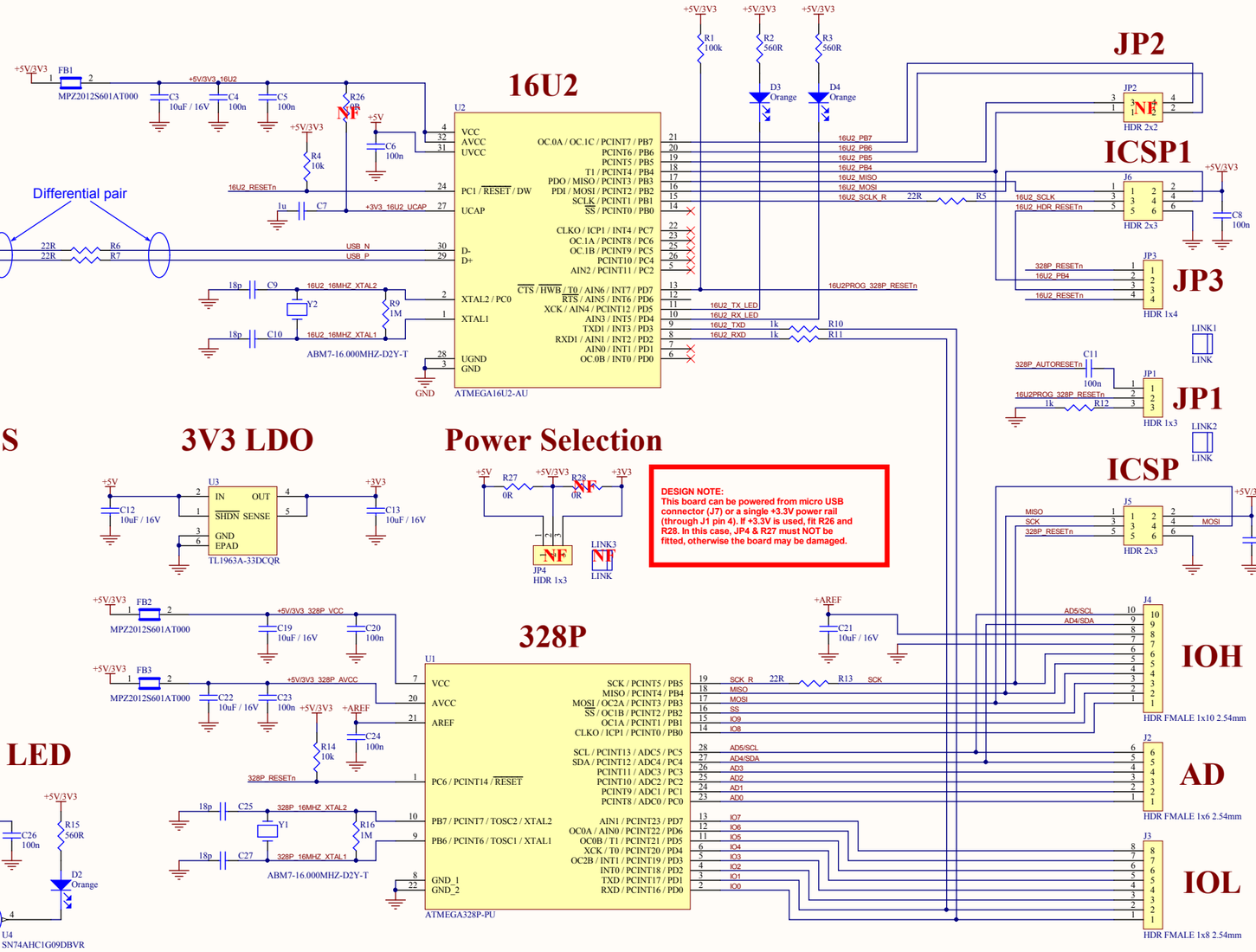

DIP SOCKET

POWER

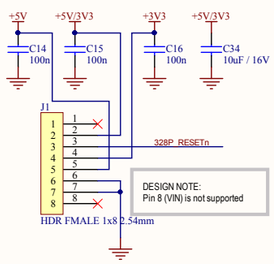

POWER PADS

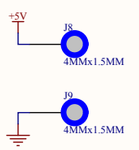

3V3 LDO

Power Selection

328P

MOUNTING HOLES

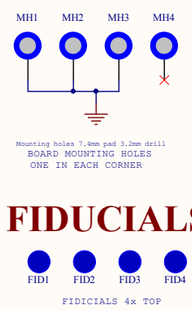

POWER LED

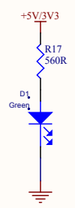

USER LED

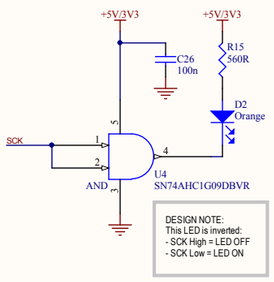

FIDUCIALS

RESET (16U2)

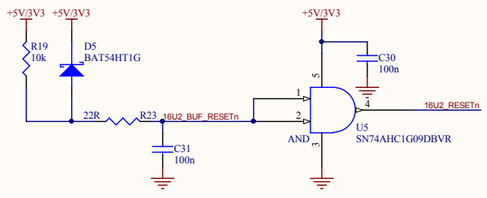

RESET (328P)

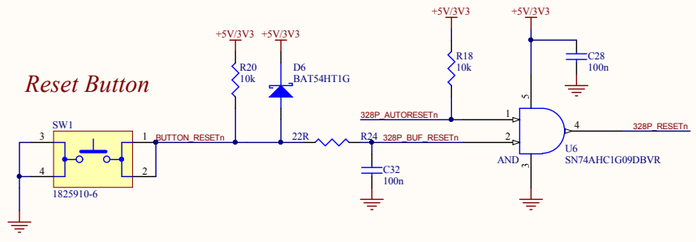

USER BUTTON

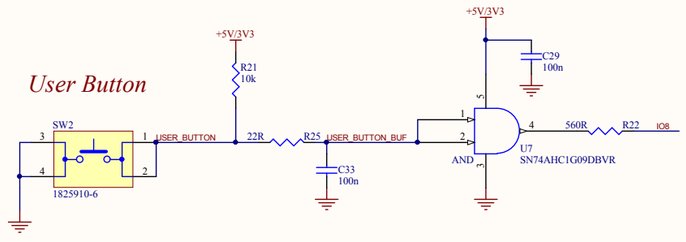

LAYOUT NOTE:
1) Route all the POWER tracks with minimum track width 0.4mm.
2) Route all the other tracks by 0.4mm and change them by the end of the design to 0.2mm. To change all of them at once, use this filter "(not InNet('+*') and not InNet('GND')) and IsTrack and (OnLayer('L1') or OnLayer ('L2'))" and then set 0.2mm width in PCB Inspector panel.

FEDEVEL Academy

Learn Schematic and PCB Design - ONLINE

(c) 2015 FEDEVEL Academy http://www.fedevel.com/academy

Title:	28Pins	Variant:	[No Variations]
Page Contents:	[03] - 28PINS SCHEMATIC.SchDoc		Checked by
Size:	DWG NO		Revision: V111
Date:	4/28/2015	Sheet 3 of 5	

(c) 2015 Designed by FEDEVEL Academy http://www.fedevel.com/academy. Based on Arduino: http://www.arduino.cc. Released under Creative Commons Attribution-ShareAlike 3.0 Unported.
This means you can use it on your own derived works, in part or completely, as long as you also adopt the same licence. You find the complete text of the licence here.: http://creativecommons.org/licenses/by-sa/3.0/legalcode

REVISION HISTORY

FEDEVEL Academy

Learn Schematic and PCB Design - ONLINE

(c) 2015 FEDEVEL Academy http://www.fedevel.com/academy

Title:	28Pins	Variant: [No Variations]	
Page Contents:	[04] - REVISION HISTORY.SchDoc	Checked by	
Size:	DWG NO		Revision: V1I1
Date:	4/28/2015	Sheet 4 of 5	

Designator
[01] - COVER PAGE.SchDoc

Designator
[02] - BLOCK DIAGRAM.SchDoc

Designator
[03] - 28PINS SCHEMATIC.SchDoc

Designator
[04] - REVISION HISTORY.SchDoc

NOTES

Mark Not Fitted Components as
NF

DRAFT - Very early stage of schematic, ignore details.

PRELIMINARY - Close to final schematic.

CHECKED - There should not be any mistakes. Tell the engineer if you find one.

RELEASED - A board with this schematic has been sent to production.

FEDEVEL Academy

Learn Schematic and PCB Design - ONLINE

(c) 2015 FEDEVEL Academy		http://www.fedevel.com/academy
Title: 28Pins		Variant: [No Variations]
Page Contents: 28Pins_Project_V1I1 Project.SchDoc		Checked by
Size:	DWG NO	Revision: V1I1
Date: 4/28/2015	Designed by www.fedevel.com	Sheet 5 of 5